HMR Series

Features

- ϕ6.3 ~ ϕ10, 125℃, 4000 hours assured
- Low ESR and high ripple current
- Designed for reflow soldering
- Vibration resistant structure
- RoHS compliant, REACH & SVHC compliant
- AEC-Q200 compliant, Please contact Jarson for more details, test data, information

Marking color: Black

Specifications					
Category temp. range	−55℃ to +125℃				
Capacitance tolerance	±20% (120 Hz / +20 ℃)				
Leakage current	I ≦ 0.01 CV or 3 μA whichever is greater (after 2 minutes)				
Tan δ	Please see the attached characteristics list				
Characteristics at low temperature	Z(-25 ℃)/Z(+20 ℃)≤2.0	Max. Impedance ratio at 100 kHz			
	Z(-55 ℃)/Z(+20 ℃)≤2.5				
Endurance	After applying rated working voltage and rated ripple current for 4000 hours at +125 ℃ ± 2 ℃, and then being stabilized at +20 ℃, capacitors shall meet the following limits.				
	Capacitance change	Within ±30% of the initial value			
	Dissipation factor (tan δ)	Less than 200% of the initial value			
	ESR	Less than 200% of the initial value			
	Leakage current	Within the initial limit			
Shelf life	After storage for 1000 h at +125 ℃ ± 2 ℃ with no voltage applied and then being stabilized at +20 ℃, capacitors shall meet the limits specified in endurance.				
Resistance to soldering heat	After reflow soldering and then being stabilized at +20 ℃, capacitors shall meet the following limits.				
	Capacitance change	Within ±10% of the initial value			
	Dissipation factor (tan δ)	Within the initial limit			
	ESR	Within the initial limit			
	Leakage current	Within the initial limit			
Ripple Current and Frequency Multipliers	Frequency	120≤ f < 1k	1k≤ f < 10k	10k≤ f < 100k	100k≤ f < 500k
	Multiplier	0.1	0.3	0.6	1.0

Dimensions:

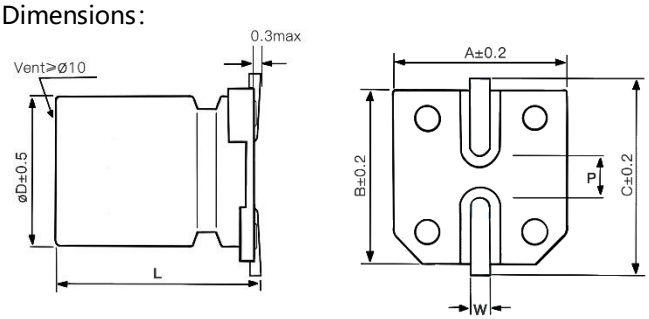

Dimensions						Unit: mm
ϕD	L	A	B	C	W	P±0.2
6.3	6±0.5	6.6	6.6	7.3	0.5~0.8	2.0
6.3	7.7±0.5	6.6	6.6	7.3	0.5~0.8	2.0
8	6.5±0.5	8.3	8.3	9.1	0.7~1.3	3.1
8	10±0.5	8.3	8.3	9.1	0.7~1.3	3.1
10	10.5±0.5	10.3	10.3	11.1	0.7~1.3	4.4
10	12.5±0.5	10.3	10.3	11.1	0.7~1.3	4.4

Vibration resistant structure:

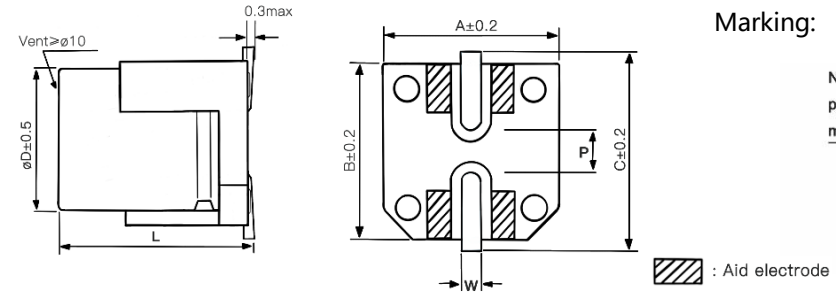

Marking:

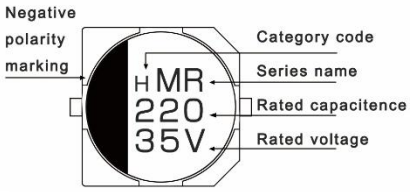

Characteristics list

Rated voltage (V)	Capacitance (±20%) (μF)	Case size		Specification			Part Number④	Taping&Reel
		øD (mm)	L (mm)	Rated ripple current① (mA rms)	ESR② (mΩ)	tan δ③		MPQ (pcs/reel)
16	82	6.3	6	900	50	0.16	HMR1C820M0606	1000
	100	6.3	6	900	50	0.16	HMR1C101M0606	1000
	150	6.3	7.7	1400	30	0.16	HMR1C151M0607	1000
	220	6.3	7.7	1400	30	0.16	HMR1C221M0607	1000
	270	8	10	1600	27	0.16	HMR1C271M0810	500
	470	10	10.5	2000	20	0.16	HMR1C471M1010	500
	560	10	10.5	2000	20	0.16	HMR1C561M1010	500
		10	12.5	2550	18	0.16	HMR1C561M1013	400
	820	10	10.5	2000	20	0.16	HMR1C821M1010	500
		10	12.5	2800	18	0.16	HMR1C821M1013	400
25	33	6.3	6	900	50	0.14	HMR1E330M0606	1000
	47	6.3	6	900	50	0.14	HMR1E470M0606	1000
	56	6.3	6	900	50	0.14	HMR1E560M0606	1000
	68	6.3	6	900	50	0.14	HMR1E680M0606	1000
		6.3	7.7	1400	30	0.14	HMR1E680M0607	1000
	100	6.3	7.7	1400	30	0.14	HMR1E101M0607	1000
	150	6.3	7.7	1400	30	0.14	HMR1E151M0607	1000
		8	10	1600	27	0.14	HMR1E151M0810	500
	220	8	10	1600	27	0.14	HMR1E221M0810	500
	270	8	10	1600	27	0.14	HMR1E271M0810	500
	330	8	10	1600	27	0.14	HMR1E331M0810	500
		10	10.5	2000	20	0.14	HMR1E331M1010	500
	470	10	10.5	2000	20	0.14	HMR1E471M1010	500
	680	10	12.5	2800	15	0.14	HMR1E681M1013	400
35	33	6.3	6	900	60	0.12	HMR1V330M0606	1000
	47	6.3	6	900	60	0.12	HMR1V470M0606	1000
	68	6.3	7.7	1400	35	0.12	HMR1V680M0607	1000
	100	6.3	7.7	1400	35	0.12	HMR1V101M0607	1000
		8	6.5	1400	35	0.12	HMR1V101M0806	1000
		8	10	1600	27	0.12	HMR1V101M0810	500
	150	8	10	1600	27	0.12	HMR1V151M0810	500
	180	8	10	1600	27	0.12	HMR1V181M0810	500
	220	10	10.5	2000	20	0.12	HMR1V221M1010	500
	270	10	10.5	2000	20	0.12	HMR1V271M1010	500
	330	10	10.5	2000	20	0.12	HMR1V331M1010	500
	470	10	12.5	2800	16	0.12	HMR1V471M1013	400
50	22	6.3	6	750	80	0.10	HMR1H220M0606	1000
	33	6.3	7.7	1100	40	0.10	HMR1H330M0607	1000
	47	8	10	1250	30	0.10	HMR1H470M0810	500
	68	8	10	1250	30	0.10	HMR1H680M0810	500
	100	8	10	1250	30	0.10	HMR1H101M0810	500
		10	10.5	1600	28	0.10	HMR1H101M1010	500
	120	10	10.5	1600	28	0.10	HMR1H121M1010	500
	150	10	10.5	1600	28	0.10	HMR1H151M1010	500
	220	10	12.5	1800	23	0.10	HMR1H221M1013	400

① Rated ripple current (100kHz / +125℃) ② ESR (100kHz / +20℃) ③ tan δ (120Hz / +20℃)

※Please refer to the page of reflow conditions for reflow profile.

Characteristics list

Rated voltage (V)	Capacitance (±20%) (μF)	Case size		Specification			Part Number④	Taping&Reel
		øD (mm)	L (mm)	Rated ripple current① (mA rms)	ESR② (mΩ)	tan δ③		MPQ (pcs/reel)
63	10	6.3	6	700	120	0.08	HMR1J100M0606	1000
	22	6.3	7.7	900	80	0.08	HMR1J220M0607	1000
	33	8	10	1100	40	0.08	HMR1J330M0810	500
	47	8	10	1100	40	0.08	HMR1J470M0810	500
	56	10	10.5	1400	30	0.08	HMR1J560M1010	500
	68	10	10.5	1400	30	0.08	HMR1J680M1010	500
	82	10	10.5	1400	30	0.08	HMR1J820M1010	500
	100	10	10.5	1400	30	0.08	HMR1J101M1010	500
	120	10	12.5	1600	26	0.08	HMR1J121M1013	400
80	22	8	10	1050	45	0.08	HMR1K220M0810	500
	33	8	10	1050	45	0.08	HMR1K330M0810	500
		10	10.5	1350	36	0.08	HMR1K330M1010	500
	47	10	10.5	1350	36	0.08	HMR1K470M1010	500
	56	10	12.5	1550	32	0.08	HMR1K560M1013	400

① Rated ripple current (100kHz / +125℃)　② ESR (100kHz / +20℃)　③ tan δ (120Hz / +20℃)

※Please refer to the page of reflow conditions for reflow profile.

Part Number System:

Hybrid E-cap	HMR series	25V	100μF	±20 %	6.3 φ x7.7L	
H	**MR**	**1E**	**101**	**M**	**0607**	
Category	Series name	Rated voltage	Capacitance	Tolerance	Case Size	Supplement

④ Note: For more details, please refer to "Part Number System - Conductive Polymer Hybrid Capacitors"