HMV Series

Features

- ϕ5 ~ ϕ10, 105℃, 5000~10000 hours assured
- Low ESR and high ripple current
- Designed for reflow soldering
- Vibration resistant structure
- RoHS compliant, REACH & SVHC compliant
- AEC-Q200 compliant, Please contact Jarson for more details, test data, information

Marking color: Black

Specifications

Category temp. range	−55℃ to +105℃				
Capacitance tolerance	±20% (120 Hz / +20 ℃)				
Leakage current	I ≦ 0.01 CV or 3 μA whichever is greater (after 2 minutes)				
Tan δ	Please see the attached characteristics list				
Characteristics at low temperature	Z(-25 ℃) / Z(+20 ℃) ≤ 2.0	Max. Impedance ratio at 100 kHz			
	Z(-55 ℃) / Z(+20 ℃) ≤ 2.5				
Endurance	After applying rated working voltage and rated ripple current for 5000/10000 hours at +105 ℃ ± 2 ℃, and then being stabilized at +20 ℃, capacitors shall meet the following limits.				
	Test Time	5ϕx6 L, 6.3ϕx6 L: 5000H 6.3ϕx7.7L, ΦD ≧ 8mm: 10000H			
	Capacitance change	Within ±30% of the initial value			
	Dissipation factor (tan δ)	Less than 200% of the initial value			
	ESR	Less than 200% of the initial value			
	Leakage current	Within the initial limit			
Shelf life	After storage for 1000 h at +105 ℃ ± 2 ℃ with no voltage applied and then being stabilized at +20 ℃, capacitors shall meet the limits specified in endurance.				
Resistance to soldering heat	After reflow soldering and then being stabilized at +20 ℃, capacitors shall meet the following limits.				
	Capacitance change	Within ±10% of the initial value			
	Dissipation factor (tan δ)	Within the initial limit			
	ESR	Within the initial limit			
	Leakage current	Within the initial limit			
Ripple Current and Frequency Multipliers	Frequency	120≤ f < 1k	1k≤ f < 10k	10k≤ f < 100k	100k≤ f < 500k
	Multiplier	0.1	0.3	0.6	1.0

Dimensions:

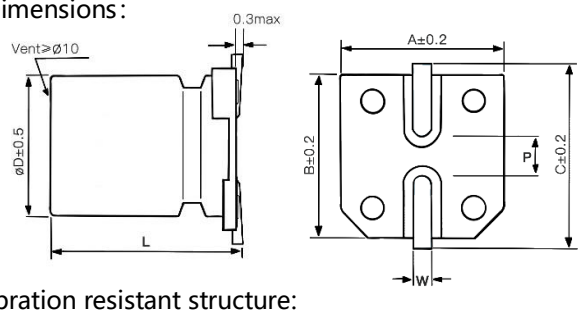

Vibration resistant structure:

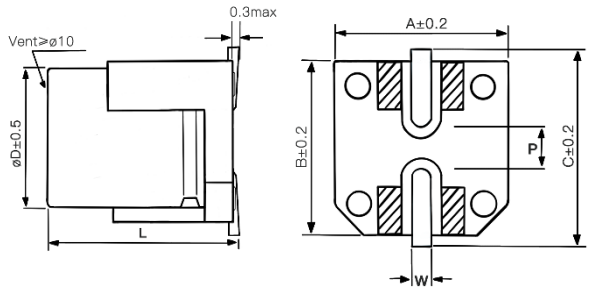

Dimensions						Unit: mm
ϕD	L	A	B	C	W	P±0.2
5	6±0.5	5.3	5.3	6.0	0.5~0.8	1.4
6.3	6±0.5	6.6	6.6	7.3	0.5~0.8	2.0
6.3	7.7±0.5	6.6	6.6	7.3	0.5~0.8	2.0
8	10±0.5	8.3	8.3	9.1	0.7~1.3	3.1
10	10.5±0.5	10.3	10.3	11.1	0.7~1.3	4.4
10	12.5±0.5	10.3	10.3	11.1	0.7~1.3	4.4

Marking:

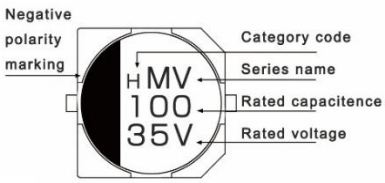

: Aid electrode

Characteristics list

Rated voltage (V)	Capacitance (±20%) (μF)	Case size		Specification			Part Number④	Taping&Reel
		øD (mm)	L (mm)	Rated ripple current① (mA rms)	ESR② (mΩ)	tan δ③		MPQ (pcs/reel)
10	100	5	6	800	80	0.18	HMV1A101M0506	1000
16	22	5	6	800	80	0.16	HMV1C220M0506	1000
	47	6.3	6	1300	50	0.16	HMV1C470M0606	1000
	82	6.3	6	1300	50	0.16	HMV1C820M0606	1000
	150	6.3	7.7	2000	30	0.16	HMV1C151M0607	1000
	270	8	10	2300	27	0.16	HMV1C271M0810	500
	470	10	10.5	2500	20	0.16	HMV1C471M1010	500
	560	10	12.5	2900	16	0.16	HMV1C561M1013	400
25	22	5	6	800	80	0.14	HMV1E220M0506	1000
	33	5	6	800	80	0.14	HMV1E330M0506	1000
	47	6.3	6	1300	50	0.14	HMV1E470M0606	1000
	56	6.3	6	1300	50	0.14	HMV1E560M0606	1000
	68	6.3	7.7	2000	30	0.14	HMV1E680M0607	1000
	100	6.3	7.7	2000	30	0.14	HMV1E101M0607	1000
	150	8	10	2300	27	0.14	HMV1E151M0810	500
	220	8	10	2300	27	0.14	HMV1E221M0810	500
	330	10	10.5	2500	20	0.14	HMV1E331M1010	500
	470	10	12.5	2900	16	0.14	HMV1E471M1013	400
35	10	5	6	800	80	0.12	HMV1V100M0506	1000
	22	5	6	800	80	0.12	HMV1V220M0506	1000
	27	6.3	6	1300	60	0.12	HMV1V270M0606	1000
	33	6.3	6	1300	60	0.12	HMV1V330M0606	1000
	47	6.3	6	1300	60	0.12	HMV1V470M0606	1000
	68	6.3	7.7	2000	35	0.12	HMV1V680M0607	1000
	100	8	10	2300	27	0.12	HMV1V101M0810	500
	150	8	10	2300	27	0.12	HMV1V151M0810	500
	220	10	10.5	2500	20	0.12	HMV1V221M1010	500
	270	10	10.5	2500	20	0.12	HMV1V271M1010	500
	330	10	12.5	2900	16	0.12	HMV1V331M1013	400
50	10	6.3	6	1100	80	0.10	HMV1H100M0606	1000
	22	6.3	6	1100	80	0.10	HMV1H220M0606	1000
	33	6.3	7.7	1600	40	0.10	HMV1H330M0607	1000
	47	8	10	1800	30	0.10	HMV1H470M0810	500
	68	8	10	1800	30	0.10	HMV1H680M0810	500
	100	10	10.5	2000	28	0.10	HMV1H101M1010	500
63	10	6.3	6	1000	120	0.08	HMV1J100M0606	1000
	22	6.3	7.7	1500	80	0.08	HMV1J220M0607	1000
	33	8	10	1700	40	0.08	HMV1J330M0810	500
	47	8	10	1700	40	0.08	HMV1J470M0810	500
	68	10	10.5	1800	30	0.08	HMV1J680M1010	500
	82	10	10.5	1800	30	0.08	HMV1J820M1010	500
	100	10	12.5	2000	27	0.08	HMV1J101M1013	400

① Rated ripple current (100kHz / +105℃)　② ESR (100kHz / +20℃)　③ tan δ (120Hz / +20℃)

※Please refer to the page of reflow conditions for reflow profile.

Characteristics list

Rated voltage (V)	Capacitance (±20%) (μF)	Case size		Specification			Part Number④	Taping&Reel
		øD (mm)	L (mm)	Rated ripple current① (mA rms)	ESR② (mΩ)	tan δ③		MPQ (pcs/reel)
80	22	8	10	1300	45	0.08	HMV1K220M0810	500
	33	10	10.5	1600	36	0.08	HMV1K330M1010	500
	47	10	10.5	1600	36	0.08	HMV1K470M1010	500

① Rated ripple current (100kHz / +105℃) ② ESR (100kHz / +20℃) ③ tan δ (120Hz / +20℃)

※Please refer to the page of reflow conditions for reflow profile.

Part Number System:

Hybrid E-cap	HMV series	25V	100μF	±20 %	6.3 φ x7.7L	
H	**MV**	**1E**	**101**	**M**	**0607**	
Category	Series name	Rated voltage	Capacitance	Tolerance	Case Size	Supplement

④ Note: For more details, please refer to "Part Number System - Conductive Polymer Hybrid Capacitors"