ARMOR TRAILER

"Built for the Trades.
Ready for the Job."

www.armortrailers.com.au | 1300 160 199 | sales@armortrailers.com.au

Our Story

Founded in 2025, Armor Trailers was created to raise the standard of what Australians should expect from a trailer. With industry roots dating back to 2013, the brand was formed in response to clear shortcomings in material quality, durability, and after-sales accountability.

Every Armor trailer is engineered to meet or exceed the Road Vehicle Standards Act 2018, combining premium materials with intelligent, purpose-driven design. Components are precision-manufactured by an ISO 9001-Certified global supplier supporting leading international brands, then professionally assembled in Victoria by experienced local mechanics.

"Built for real Australian conditions"
That's the Armor difference

Come See Us
18 Yiannis Ct Springvale 3171 VIC

ARMOR TRAILER

"Built for the Trades.
Ready for the Job."

www.armortrailers.com.au | 1300 160 199 | sales@armortrailers.com.au

Our Story

Founded in 2025, Armor Trailers was created to raise the standard of what Australians should expect from a trailer. With industry roots dating back to 2013, the brand was formed in response to clear shortcomings in material quality, durability, and after-sales accountability.

Every Armor trailer is engineered to meet or exceed the Road Vehicle Standards Act 2018, combining premium materials with intelligent, purpose-driven design. Components are precision-manufactured by an ISO 9001-Certified global supplier supporting leading international brands, then professionally assembled in Victoria by experienced local mechanics.

"Built for real Australian conditions"
That's the Armor difference

Come See Us
18 Yiannis Ct Springvale 3171 VIC

ARMOR TRAILER

"Built for the Trades.
Ready for the Job."

www.armortrailers.com.au | 1300 160 199 | sales@armortrailers.com.au

Our Story

Founded in 2025, Armor Trailers was created to raise the standard of what Australians should expect from a trailer. With industry roots dating back to 2013, the brand was formed in response to clear shortcomings in material quality, durability, and after-sales accountability.

Every Armor trailer is engineered to meet or exceed the Road Vehicle Standards Act 2018, combining premium materials with intelligent, purpose-driven design. Components are precision-manufactured by an ISO 9001-Certified global supplier supporting leading international brands, then professionally assembled in Victoria by experienced local mechanics.

"Built for real Australian conditions"
That's the Armor difference

Come See Us!
18 Yiannis Ct Springvale 3171 VIC

SERIES Heavy Duty Tandem

Model TE85

Heavy Duty 8x5 Tandem | 3200kg ATM

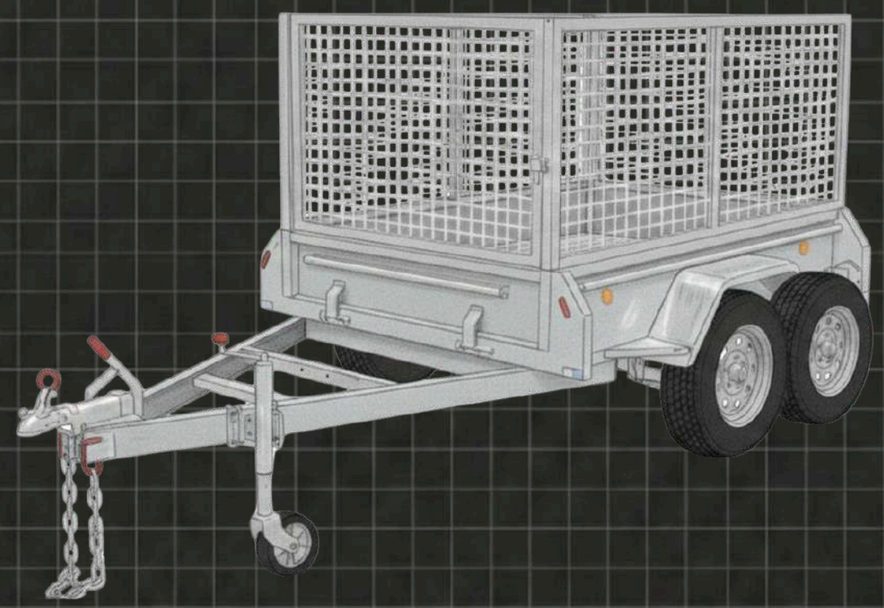

Extra heavy-duty reinforced hanger

Extra heavy-duty safety chain & connector

TD85 coupling

Extra heavy duty handles

DACROMAT parts used for superior rust protection

Over-rated-capacity Rocker-Roller spring suspension system

Weights & Dimensions

ATM
3200KG
Tare Mass
650KG
Payload Weight
2550KG
Internal Size
L 2400mm x W 1500mm
External Size
L 4280mm x W 2050mm
Drawbar
L 1800mm / Tube 100 x 50 x 4mm

Mechanical & Safety

Brake System
Electric Brake with Breakaway System Included
Suspension
7 Leafs Greaseable Rocker Roller system
Axle
Solid Square Tube 50 x 50mm (Aust. standard)
Wheels & Tyres
Sunraysia Style 6 studs (Land Cruiser pattern) & 195 R15 Light truck tyre
Electrical
7 Pin Flat / Round Plug & 13mm Double Safety Chain
Tie Down Point
N/A

Chassis & Body

Chassis Finishing /Frame Tube
Hot-Dipped Galvanised (70 x 50 x 4mm Tube)
Jockey Wheel
Premium 8" Swing up
Chassis Side
300mm
Cage
600mm (Upgrade available)
Coupling
50mm ADR approved

Key Highlights

Build Quality	ISO 9001 Certified & 100% ADR Compliant
Performance	~2400kg+ Load Capacity & ~12% stronger Suspension/Tyres
Durability	~20% Thicker Hot-Dip Galvanising
Warranty	12 months parts & 36 months structural warranty

SERIES Hydraulic Tipper

Model TH85

Heavy Duty 8x5 Tipper | 3500kg ATM

Easy-front-access gate design

Space-saving hydraulic motor power unit box design

Super-Heavy-Duty front latches

long items loading

Weights & Dimensions

ATM
3500KG
Tare Mass
970KG
Payload Weight
2530KG
Internal Size
L 2400mm x W 1500mm
External Size
L 4280mm x W 2050mm
Drawbar
L 1800mm / Tube 100 x 50 x 4mm

Mechanical & Safety

Brake System
Electric Brake & Breakaway (Included)
Suspension
Heavy Duty 8 Leafs Greaseable Rocker Roller
Axle
Solid Square Tube 50 x 50mm (Aust. standard)
Wheels & Tyres
Sunraysia 6-stud / 195 R15 Light Truck
Electrical
7 Pin Flat / Round Plug & 13mm Double Safety Chain
Tie Down Point
N/A

Chassis & Body

Chassis Finishing /Frame Tube
Hot-Dipped Galvanised (100x50x4mm)
Jockey Wheel
Premium 8" Swing up
Chassis Side
500mm
Cage
Not included (Upgrade available)
Coupling
50mm ADR approved
Tie Down Point
N/A

Key Highlights

Build Quality	ISO 9001 Certified & 100% ADR Compliant
Performance	~3000kg+ Load Capacity & ~12% stronger Suspension/Tyres
Durability	~~ Premium Electric Brakes + Breakaway
Warranty	12 months parts & 36 months structural warranty

SERIES Tandem 2000

Model TD85

8x5 Tandem Cage | 2000kg ATM

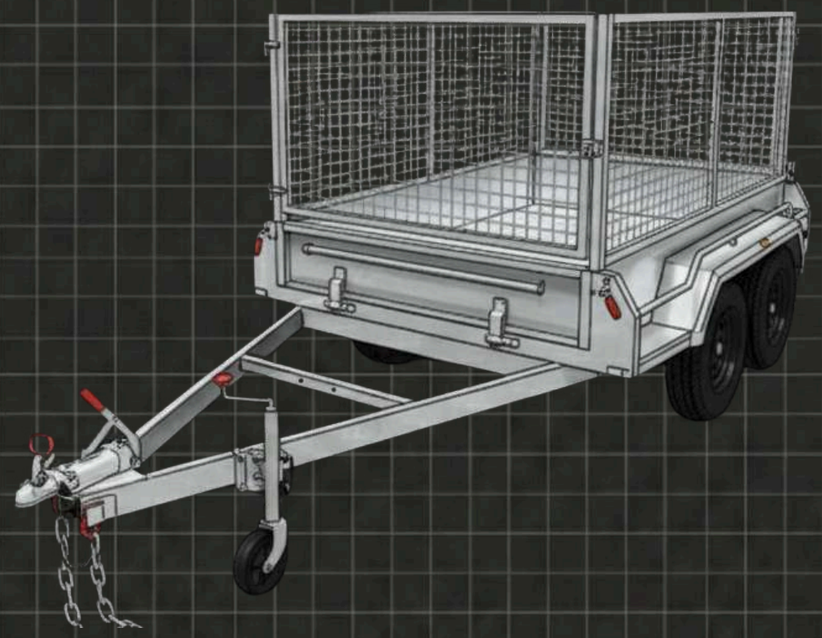

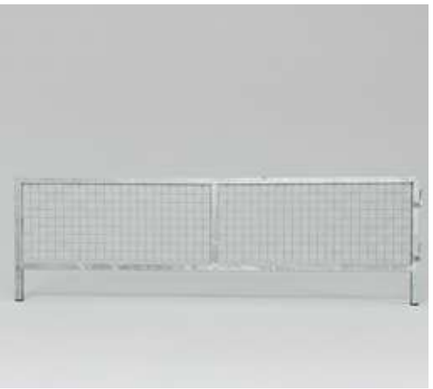

Easy & solid PLUG-IN design cage panel design

Reinforced heavy duty hinges

EXTRA heavy duty handles

Fully welded chassis & frame membrane

Easy-access front gate design

Reinforced heavy duty hanger

Weights & Dimensions

ATM
2000KG
Tare Mass
580KG
Payload Weight
1420KG
Internal Size
L 2400mm x W 1500mm
External Size
L 4280mm x W 2050mm
Drawbar
L 1800mm / Tube 100 x 50 x 4mm

Mechanical & Safety

Brake System
Mechanical Disc Brake
Breakaway System
N/A
Suspension
6 Leafs Rocker-Roller
Axle
45 x 45mm Solid Square
Wheels & Tyres
5 studs Ford / 185 R14
Electrical
7 Pin Plug & 13mm Double Chain
Tie Down Point
N/A

Chassis & Body

Chassis Finishing /Frame Tube
Hot-Dipped Galvanised
(70 x 50 x 4mm)
Jockey Wheel
Premium 8" Swing up
Chassis Side
300mm
Cage
600mm (Upgrade available)
Coupling
50mm ADR approved

Key Highlights

Build Quality	ISO 9001 Certified & Premium Mechanical Disc Brake
Performance	~25% Over-Rated Tyres
Durability	~20% Thicker Hot-Dip Galvanising
Warranty	12 months parts & 36 months structural warranty

SERIES Single Axle

Model S64

ADR approved coupling

Extra-capacity axle & spring

Fully welded chassis

6x4 Single Axle | 750kg ATM

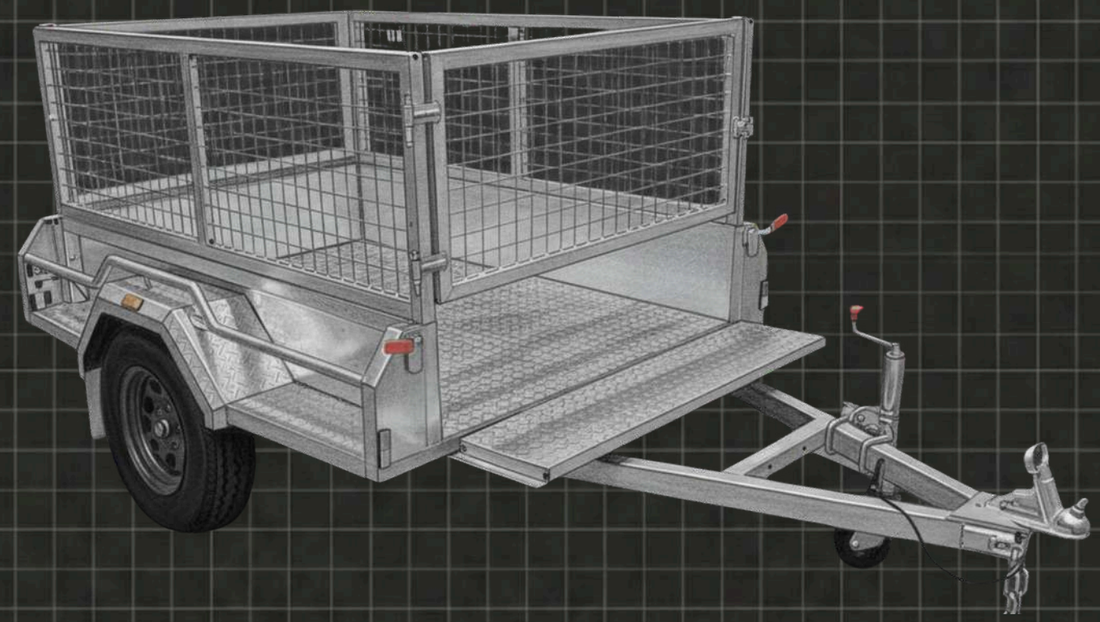

Weights & Dimensions

ATM
750KG
Tare Mass
260KG
Payload Weight
490KG
Internal Size
L 1800mm x W 1200mm
External Size
L 3080mm x W 1680mm
Drawbar
L 1200mm / Tube 70 x 50 x 4mm

Mechanical & Safety

Brake System
Mechanical Disc Brake
Breakaway System
N/A
Suspension
6 Leafs Eye-to-Eye heavy duty
Axle
Solid Square Tube 40 x 40mm
Wheels & Tyres
5 studs Ford / 185R14C Light truck
Electrical
7 Pin Plug & 10mm Single chain
Tie Down Point
N/A

Chassis & Body

Chassis Finishing /Frame Tube
Hot-Dipped Galvanised
(40x40x4mm)
Jockey Wheel
Premium 6" Swing up
Chassis Side
300mm
Cage
600mm (Upgrade available)
Coupling
50mm ADR approved

Key Highlights

Build Quality	ISO 9001 Certified & 100% ADR Compliant
Performance	Spring & Tyre ratings exceed 40% ADR
Durability	~15% Thicker Galvanised Coating
Warranty	12 months parts & 36 months structural warranty

SERIES Plant Trailer

Model TEP85

8x5 Tandem Plant | 3.5T ATM

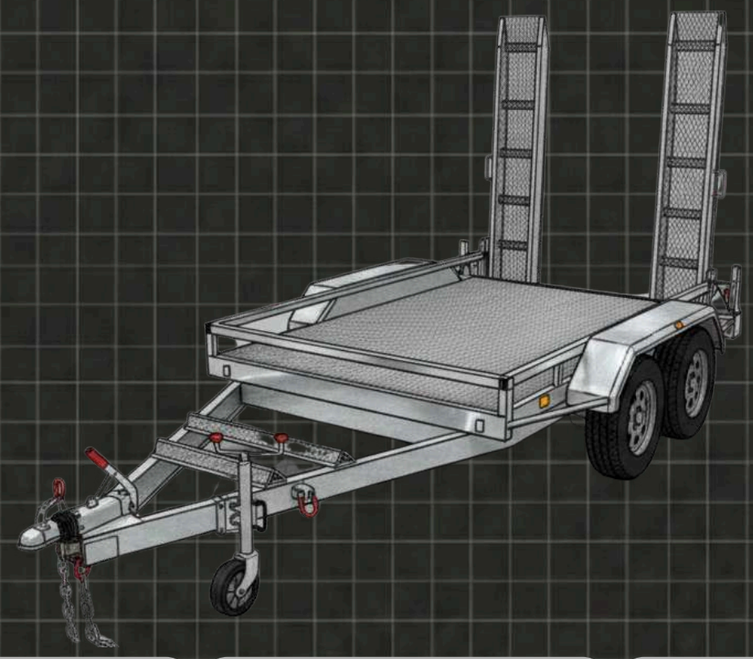

Super heavy-duty A frame design

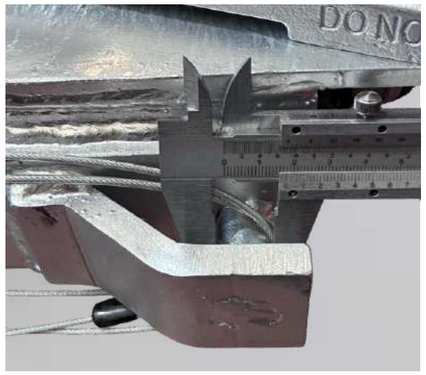

18mm thick safety-chain connnector

Prebuilt heavy duty stabliliser legs

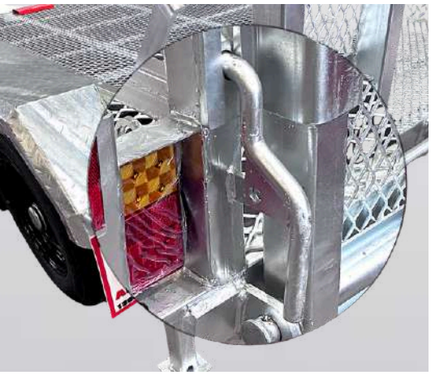

Easy-to-use Heavy Duty ramp handle design

Extra heavy-duty adjustable ramp design

Prebuilt heavy-duty tie-down points (10mm thick) & rail (32mm thick

Weights & Dimensions

ATM
3200KG
Tare Mass
630KG
Payload Weight
2870KG
Internal Size
L 2700mm x W 1600mm
External Size
L 4660mm x W 2120mm
Drawbar
L 1800mm / Tube 100x50x4mm

Mechanical & Safety

Brake System
Electric Brake with Breakaway System Included
Suspension
Heavy Duty 8 Leafs Greaseable Rocker Roller
Axle
Heavy duty square tube 50x50mm
Wheels & Tyres
Sunraysia 6 studs / 195 R15
Electrical
7 Pin Plug & Heavy Duty 13mm Double chain
Tie Down Point
6 points

Chassis & Body

Chassis Finishing /Frame Tube
100mm x 50mm x 4mm mesh thickness
Jockey Wheel
Heavy duty 8" Swing up
Chassis Side
160mm
Cage
N/A
Coupling
50mm ADR approved

Key Highlights

Build Quality	ISO 9001 Certified & Wider chassis width for mojarity Ride-On-Equiment in Australia
Performance	2400kg+ loading capacity + 6 Built-In tie down point
Durability	4mm thick grippy chassis mesh
Warranty	12 months parts & 36 months structural warranty