80 PONTIAC

Service Manual Supplement

S-8910-FAE

1989 FIREBIRD 20th ANNIVERSARY TRANS AM SERVICE MANUAL SUPPLEMENT

FOREWORD

This manual has been prepared as a supplement to the 1989 Firebird Service Manual. It contains the latest product information specific to the 1989 20th Anniversary Trans Am vehicle available at the time of publication. Whenever it becomes necessary to refer to sections not listed in this supplement, refer to the 1989 Firebird Service Manual.

When reference is made in this manual to a brand name, number, or specific tool, an equivalent product may be used in place of the recommended item.

All information, illustrations and specifications contained in this literature are based on the latest product information available at the time of publication approval. The right is reserved to make changes at any time without notice.

NOTICE: When fasteners are removed, always reinstall them at the same location from which they were removed. If a fastener needs to be replaced, use the correct part number fastener for that application. If the correct part number fastener is not available, a fastener of equal size and strength (or stronger) may be used. Fasteners that are not reused, and those requiring thread locking compound will be called out. The correct torque value must be used when installing fasteners that require it. If the above conditions are not followed, parts or system damage could result.

CHEVROLET-PONTIAC-CANADA GROUP
General Motors Corporation
WARREN, MICHIGAN

© 1988 General Motors Corporation
All Rights Reserved
11-8-88
Litho in U.S.A.

No part of this publication may be reproduced, stored in any retrieval system or transmitted, in any form or by any means, including but not limited to electronic, mechanical, photocopying, recording or otherwise, without the prior written permission of the Chevrolet-Pontiac-Canada Group of General Motors Corp. This includes all text, illustrations, tables and charts.

TABLE OF CONTENTS	SECTION
GENERAL INFORMATION	
General Information	0A
Maintenance and Lubrication	0B
HEATING AND AIR CONDITIONING	
Manually Controlled Air Conditioning	1B
STEERING, SUSPENSION, TIRES AND WHEELS	
Power Steering Gear and Pump	3B1
Front Suspension	3C
Rear Suspension	3D
ENGINE	
3.8L V6 Engine	6A5
Cooling and Radiator	6B
Engine Fuel	6C
Cranking System	6D2
Charging System	6D3
Ignition System	6D4
Engine Wiring	6D5
Driveability and Emissions-General Information	6E
Driveability and Emissions-Fuel Injection (Port)	6E3
Exhaust System	6F
Turbocharger	6J
TRANSMISSION	
Transmission General Information and On-Vehicle Service	7A
Automatic Transmission Diagnosis	200-4R
Automatic Transmission Unit Repair	200-4R
ELECTRICAL — BODY AND CHASSIS	
Electrical Diagnosis	8A
Instrument Panel, Cluster and Console	8C
ACCESSORIES	
Cruise Control	9B
BODY SERVICE	
General Body Service Procedures	10-1
Seats	10-9
INDEX	INDEX-1

CAUTION

To reduce the chance of personal injury and/or property damage, the following instructions must be carefully observed:

Proper service and repair are important to the safety of the service technician and the safe, reliable operation of all motor vehicles. If part replacement is necessary, the part must be replaced with one of the same part number or with an equivalent part. Do not use a replacement part of lesser quality.

The service procedures recommended and described in this service manual are effective methods of performing service and repair. Some of these procedures require the use of tools specially designed for the purpose.

Accordingly, anyone who intends to use a replacement part, service procedure or tool, which is not recommended by the vehicle manufacturer, must first determine that neither his safety nor the safe operation of the vehicle will be jeopardized by the replacement part, service procedure or tool selected.

It is important to note that this manual contains various 'Cautions' and 'Notices' that must be carefully observed in order to reduce the risk of personal injury during service or repair, or the possibility that improper service or repair may damage the vehicle or render it unsafe. It is also important to understand that these 'Cautions' and 'Notices' are not exhaustive, because it is impossible to warn of all the possible hazardous consequences that might result from failure to follow these instructions.

SECTION 0A

GENERAL INFORMATION

CONTENTS

Vehicle Identification Number 0A-1
Transmission Usage 0A-1
Transmission Identification 0A-1
Regular Production Options 0A-1

VEHICLE IDENTIFICATION NUMBER

For vehicle identification number (VIN) codes, refer to Figure 1.

TRANSMISSION USAGE

For transmission usage chart, refer to Figure 2.

TRANSMISSION IDENTIFICATION

For transmission model and serial number, refer to Figure 3.

REGULAR PRODUCTION OPTIONS

DG7 Mirror, O/S RR View Electric Remote (Sport)
LC2 Engine - 3.8L, V6, Turbo
MW9 Transmission, 4 spd, Auto, THM 200-4R
PW7 Wheel 16 × 8, Styled Aluminum (Superlight)
UD2 Cluster, I/P
Y82 Trans Am, Limited Edition 20th Anniversary

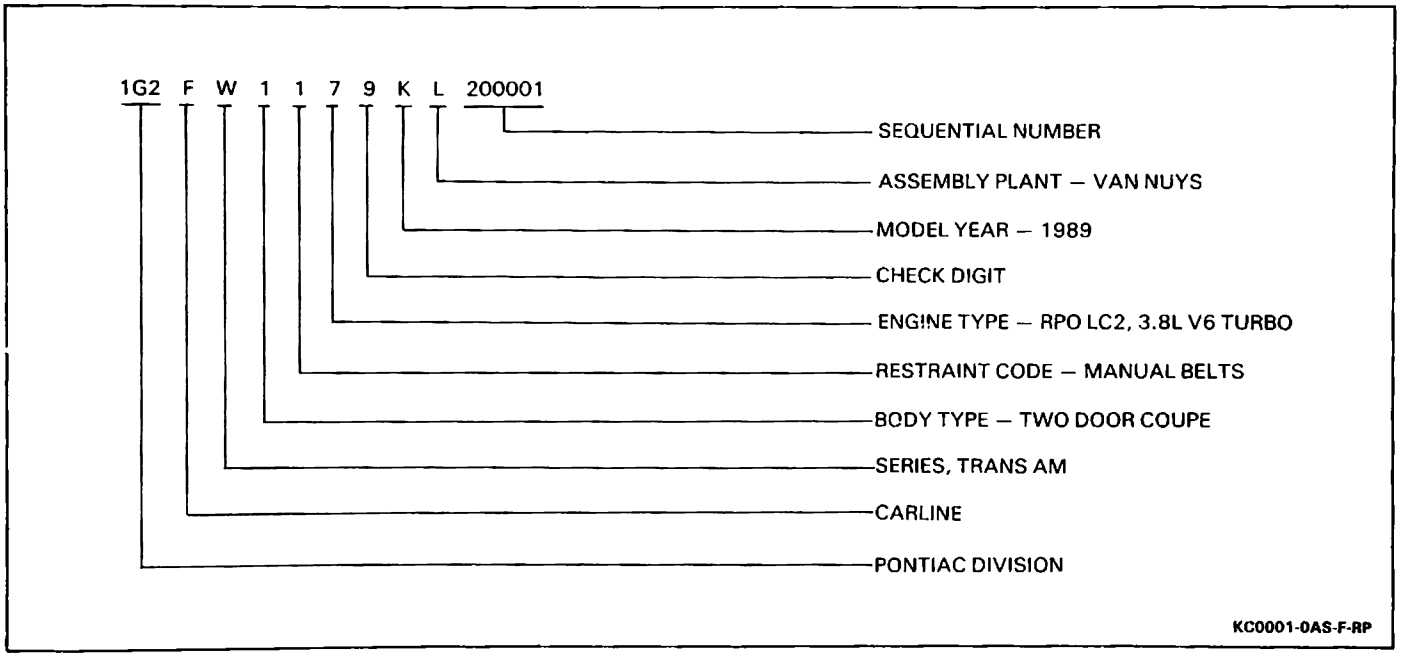

Figure 1 – Vehicle Identification Number (VIN) Codes

ENGINE	AXLE (RPO – RATIO)	TRANSMISSION
3.8L V6 (VIN 7)	GW6 – 3.27	THM 200-4R

KC0002-0AS-F-RP

Figure 2 – Transmission Usage

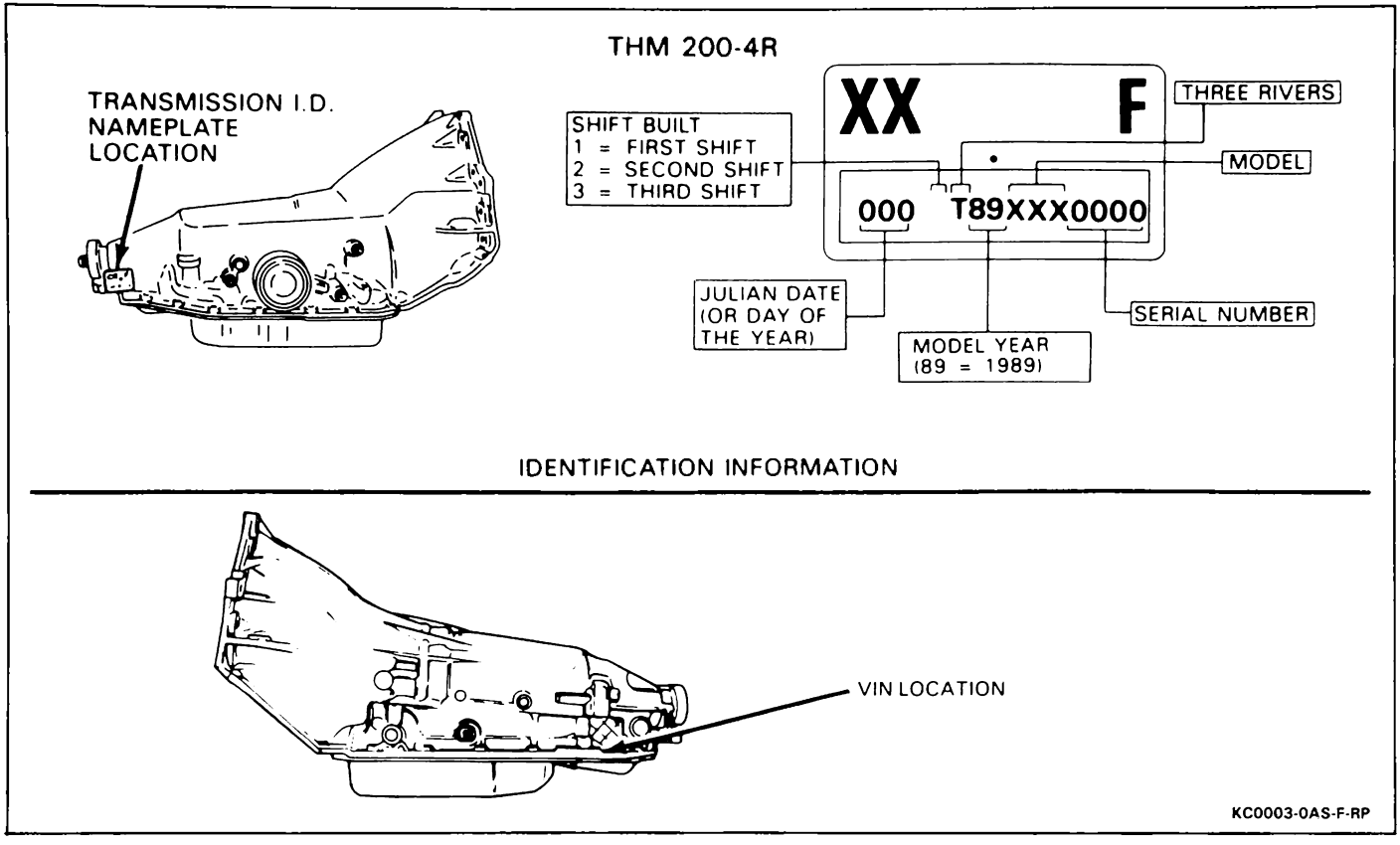

Figure 3 — Transmission Labels (200-4R)

SECTION 0B

MAINTENANCE AND LUBRICATION

CONTENTS

Scheduled Maintenance Service 0B-1
Engine Oil and Viscosity 0B-1
Explanation of Scheduled Maintenance Services 0B-1
EGR System Service 0B-1
Maintenance Items 0B-1
Cooling System Capacities 0B-1
Belt Tensions 0B-1
Component Capacities 0B-1

SCHEDULED MAINTENANCE SERVICE

For required maintenance service, refer to the 1989 Firebird Service Manual. When changing the oil filter, additional engine oil may be required to bring the oil level to the full mark.

When draining or replacing the torque converter, additional transmission fluid may be required to bring the level to the full mark.

ENGINE OIL AND VISCOSITY

The engine oil and viscosity recommendation for the 3.8L (VIN 7) (RPO LC2) turbo engine is SF/CC or SF/CD 10w-30.

EXPLANATION OF SCHEDULED MAINTENANCE SERVICES

For an explanation of scheduled maintenance services, refer to the 1989 Firebird Service Manual.

When referencing the 1989 Firebird Service Manual, VIN 7 applies to the 5.7L engine.

EGR SYSTEM SERVICE

No EGR system service is necessary for the 3.8L (VIN 7) (RPO LC2) turbo engine.

MAINTENANCE ITEMS

Air Cleaner Filter ..... AC Type A 633C
Engine Oil Filter ..... AC Type PF 1218
Fuel Filter ..... AC Type GF481
Oxygen Sensor AFS-16P
PCV Valve ..... AC Type CV893C
Radiator Cap ..... AC Type RC27
Spark Plugs ..... AC Type R42LTS
  Gap ..... 0.035"

COOLING SYSTEM CAPACITIES

3.8L (VIN 7) (RPO LC2) Turbo Engine ..... 12.3L (13.0 qts.)

BELT TENSIONS

The 3.8L (VIN 7) (RPO LC2) turbo engine is equipped with a serpentine belt and an automatic tensioner. No adjustment of the belt is necessary.

COMPONENT CAPACITIES

Air Conditioning, R-12 ..... 1.02 Kg (2.25 lb.)
Engine Crankcase, 3.8L (VIN 7) (RPO LV2) Turbo
  Without Filter Change ..... 4.73L (5.0 qt.)
Fuel Tank ..... 58.7L (15.5 gal.)
Transmission — Automatic (200-4R)
  Drain and Refill ..... 3.25L (7.0 pt.)
  Overhaul ..... 10.5L (22.0 pt.)

NOTE: The capacities shown are approximate. Add fluids as necessary to bring to appropriate level. Engine oil filter replacement will require additional engine oil during refill.

SECTION 1B

MANUALLY CONTROLLED AIR CONDITIONING

The following "Notice" applies to one or more steps in the assembly procedure of components in this portion of the manual as indicated at appropriate locations by the terminology "NOTICE: See "Notice" on page 1B-1 of this section."

NOTICE: When fasteners are removed, always reinstall them at the same location from which they were removed. If a fastener needs to be replaced, use the correct part number fastener for that application. If the correct part number fastener is not available, a fastener of equal size and strength (or stronger) may be used. Fasteners that are not reused, and those requiring thread locking compound will be called out. The correct torque value must be used when installing fasteners that require it. If the above conditions are not followed, parts or system damage could result.

CONTENTS

General Description 1B-1
On-Vehicle Service 1B-1
Heater Hoses and Pipes 1B-1
Refrigerant Hose 1B-3
Compressor 1B-4
Generator, Compressor and Power Steering Pump Bracket 1B-5
Specifications 1B-7

GENERAL DESCRIPTION

The manually controlled air conditioning system is similar to that of the base Firebird with the LB8 V6 engine, with the following exceptions. The compressor is mounted to a cast metal bracket attached to the front of the left cylinder head. The bracket also supports the generator and power steering pump. For accessibility and clearance, the compressor clutch coil electrical connector is moved to the left side of the mounted compressor. The compressor and condenser refrigerant hose and connector block assembly is similar to the type used on the 1987 V8 engine installations.

Heater inlet and outlet pipes are routed just inboard of the right-hand valve cover and are connected to the heater core inlet and outlet tubes by short formed heater hoses. The forward end of the heater inlet pipe is connected to a fitting near the top of the intake manifold. From the forward end of the heater outlet pipe, coolant flows down through a short vertical pipe and two short connecting hoses to the engine oil cooler at the base of the oil filter adapter. After absorbing excess heat from the engine oil, the coolant flows through another pipe and two connecting hoses to a fitting cast into the coolant pump inlet. At that point, the coolant joins the main flow through the engine's cooling system.

Branching fittings near the forward ends of the heater inlet and outlet pipes are connected by short hoses to the coolant inlet and outlet fittings at the throttle body to warm the air entering the engine. Because a vacuum-controlled hot water valve is not used with the LC2 turbocharged 3.8L V6 engine, the vacuum hose for the hot water valve vacuum actuator is cut off and capped.

ON-VEHICLE SERVICE

HEATER HOSES AND PIPES

Figure 1

Remove or Disconnect

1. Engine coolant.
   - Drain enough engine coolant into a clean container to lower the coolant level below the level of the lowest heater hose fitting.

   NOTICE: The heater core can be damaged if excessive force is applied to the heater core tubes during removal of the heater hoses.

2. Outlet hose (1) and inlet hose (2).
   - Loosen the clamps (5) enough to slide them away from the area of the heater core tubes and the ends of the outlet pipe (3) and inlet pipe (4).
   - Remove the hose ends by twisting and pulling. If the outlet hose (1) or inlet hose (2) will not come off the heater core tube easily with this method, cut off the hose forward of the heater core tube. Then cut the portion of the hose remaining on the heater core tube lengthwise and peel and twist the hose off the tube.
3. Throttle body outlet and inlet hoses and clamps from the outlet pipe (3) and inlet pipe (4).
   - Loosen the clamps enough to slide them away from the ends of the fittings at the heater pipes and disconnect the hose ends from the pipes by twisting and pulling.

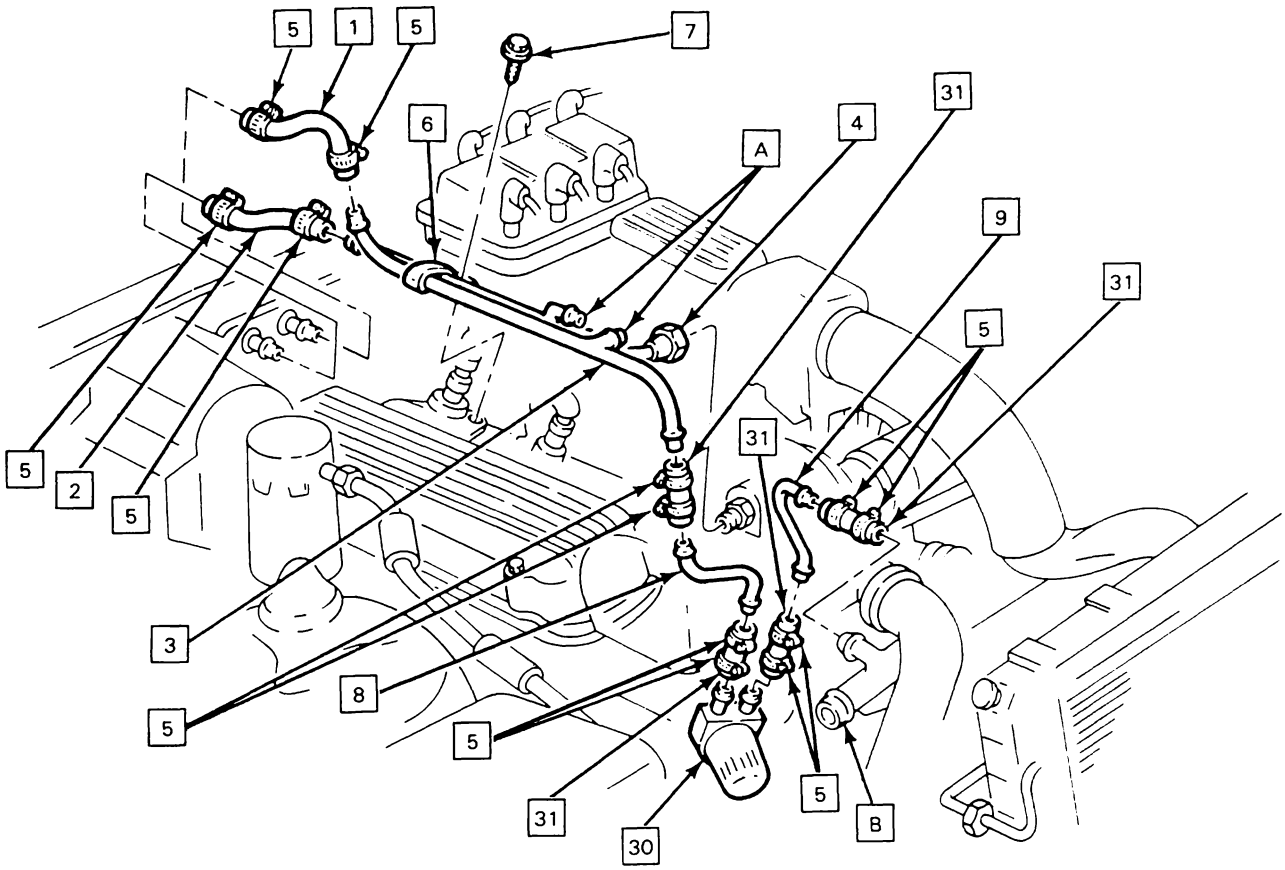

A	TO THROTTLE BODY INLET AND OUTLET HOSES	4	INLET PIPE	9	OIL COOLER OUTLET PIPE
B	COOLANT PUMP INLET	5	CLAMP	30	OIL COOLER
1	OUTLET HOSE	6	CLIP	31	HOSE
2	INLET HOSE	7	SCREW		
3	OUTLET PIPE	8	OIL COOLER INLET PIPE		

KC0001-1BS-F-RP

Figure 1 — Heater Hoses and Pipes

4. Short coupling hose (31) and upper clamp (5) from the forward end of the outlet pipe (3).
5. Coupling at the forward end of the inlet pipe (4).
   - Hold the fitting in the intake manifold with a second wrench to keep it from turning while disconnecting the coupling.
6. Screw (7) and heater pipes retaining clip (6).
7. Outlet pipe (3) and inlet pipe (4).
8. Short coupling hose (31) and forward clamp (5) from the fitting on the coolant pump inlet.

- Raise the vehicle and suitably support as described in the 1989 Firebird Service Manual.

9. Short coupling hoses (31) and lower clamps (5) from the oil cooler (30).
10. Oil cooler inlet pipe (8) and oil cooler outlet pipe (9), with short coupling hoses (31) and clamps (5) attached.
11. Hoses (31) and clamps (5) from the oil cooler inlet pipe (8) and oil cooler outlet pipe (9).

Install or Connect

NOTICE: See "Notice" on page 1B-1 of this section.

1. Short connecting hoses (31) and clamps (5) to both ends of the oil cooler inlet pipe (8) and the oil cooler outlet pipe (9).
   - Tighten the clamp screws only enough to keep the hoses in place.
2. Oil cooler inlet pipe (8), hose (31) and clamp (5) to the inlet tube of the oil cooler (30).

Tighten

- Both hose clamps (5) of the lower hose (31) to 1.3 N·m (11 lb. in.).

3. Oil cooler outlet pipe (9), hose (31) and clamp (5) to the outlet tube of the oil cooler (30).

Tighten

- Both hose clamps (5) of the lower hose (31) to 1.3 N·m (11 lb. in.).

- Lower the vehicle.

4. Oil cooler outlet pipe (9), hose (31) and clamp (5) to the fitting on the coolant pump inlet.

Tighten

- Both hose clamps (5) of the hose (31) to 1.3 N·m (11 lb. in.)

5. Inlet pipe (4), outlet pipe (3), retaining clip (6) and screw (7) to the right-hand cylinder head.

Tighten

- Screw (7) to 1.4 N·m (12 lb. in.).

6. Inlet pipe coupling to the fitting in the intake manifold.

Tighten

- Inlet pipe coupling to 27 N·m (20 lb. ft.)

7. Hose (31) and clamps (5) connecting the forward end of the outlet pipe (3) with the oil cooler inlet pipe (8).

Tighten

- Both clamps (5) to 1.3 N·m (11 lb. in.).

8. Throttle body outlet and inlet hoses and clamps to the outlet pipe (3) and inlet pipe (4).

Tighten

- Clamps to 1.3 N·m (11 lb. in.).

9. Heater outlet hose (1), inlet hose (2) and clamps (5).
   - Slip a new hose clamp (5) over each hose end to be installed and tighten the clamps (5) only enough to keep them from sliding off the hose during installation.
   - Push the hose end onto the heater core tube or pipe end with a twisting motion. The hose end should be 1.0 mm (0.04 inch) away from touching the nearest surface (dash panel).
   - Install the clamp (5) beyond any bead around the pipe or tube, but not closer than 3.0 mm (0.12 inch) to the nearest surface (dash panel).
   - Repeat the hose and clamp installation procedure at the other end of the hose.

Tighten

- Clamp screws to 1.3 N·m (11 lb. in.).

10. Engine coolant.
    - Use the coolant drained earlier only if it is uncontaminated. Discard contaminated coolant and replace it with fresh 50/50 coolant and water mixture.

Inspect

- Be sure that hoses and pipes do not rub against other components. Adjust the hose or pipe as necessary to correct the position.
- Operate the engine and check the installation for leaks. Tighten hose clamp screws a bit at a time if necessary to stop a leak.
- Check the coolant level after the engine has been warmed up and cooled. Add coolant as necessary.

REFRIGERANT HOSE

The different refrigerant hose and connector block assembly does not require any change in servicing procedures. Service as described in the 1989 Firebird Service Manal.

Important

- New oval cross-section O-rings have been released to provide more effective sealing of the refrigerant line connections at the compressor rear head. Oval cross-section O-rings should be used when installing the refrigerant hose connector block to the compressor. The cavities for the O-rings should be lubricated with clean refrigerant oil and the O-rings should be pressed into place with a tool that will not damage the O-ring. A thin, smooth plastic rod with no sharp edges or points is an ideal tool for this purpose.

COMPRESSOR

Figure 2

Remove or Disconnect

1. Refrigerant.
   - Discharge the system as described in the 1989 Firebird Service Manual.
2. Turbocharger inlet hose.
- Rotate the spring-loaded movable portion of the drive belt tensioner upward and remove the serpentine drive belt from the compressor pulley.
- Raise the vehicle and suitably support as described in the 1989 Firebird Service Manual.
3. Nuts and bolts from the right intercooler bracket.
4. Right intercooler bracket.
5. Lower bolt from the left intercooler bracket.
- Lower the vehicle.
6. Upper bolts from the left intercooler bracket.
7. Left intercooler bracket.
8. Intercooler hoses at the throttle body and at the turbocharger.
9. Center bolt from the drive belt tensioner pulley.
10. Drive belt tensioner pulley.
11. Electrical connectors at the compressor (10).
12. Refrigerant lines from the compressor (10).
    - Remove the screw and discard the O-ring from the back of the refrigerant line connector block at the rear head of the compressor (10).
    - Remove the connector block and discard the two 0-ring seals for the compressor inlet and outlet ports.
    - Seal both open ports in the connector block with tape to prevent dirt or moisture contamination of the refrigeration system.
13. Two compressor through bolts (12 and 13) that hold the generator support bracket (25) to the compressor front face.
14. Nuts (14) from the stud (11) and bolt (12) holding the compressor (10) to the generator, compressor and power steering pump bracket (19).
15. Compressor (10).
    - Slide the compressor (10) forward and off the stud (11) and bolt (12) in the generator, compressor and power steering pump bracket (19).

Install or Connect

NOTICE: See "Notice" on page 1B-1 of this section.

1. Refrigerant oil as described in the 1989 Firebird Service Manual.
2. Compressor (10).
   - Slide the compressor (10) onto the stud (11) and loose bolt (12) in the generator, compressor and power steering pump bracket (19).
3. Nuts (14) to the stud (11) and bolt (12).

Tighten

- Nuts (14) to 50 N·m (37 lb. ft.).

4. Compressor through bolts (12 and 13) into the threaded ends of the generator support bracket (25) from the rear, finger-tight.

Tighten

- Compressor through bolts (12 and 13) to 50 N·m (37 lb. ft.).

5. Refrigerant hose connector block.
   - Install new O-rings to the compressor block and the cavities around the ports in the rear head of the compressor (10). Use new oval cross-section O-rings and lubricate them with 525 viscosity refrigerant oil before

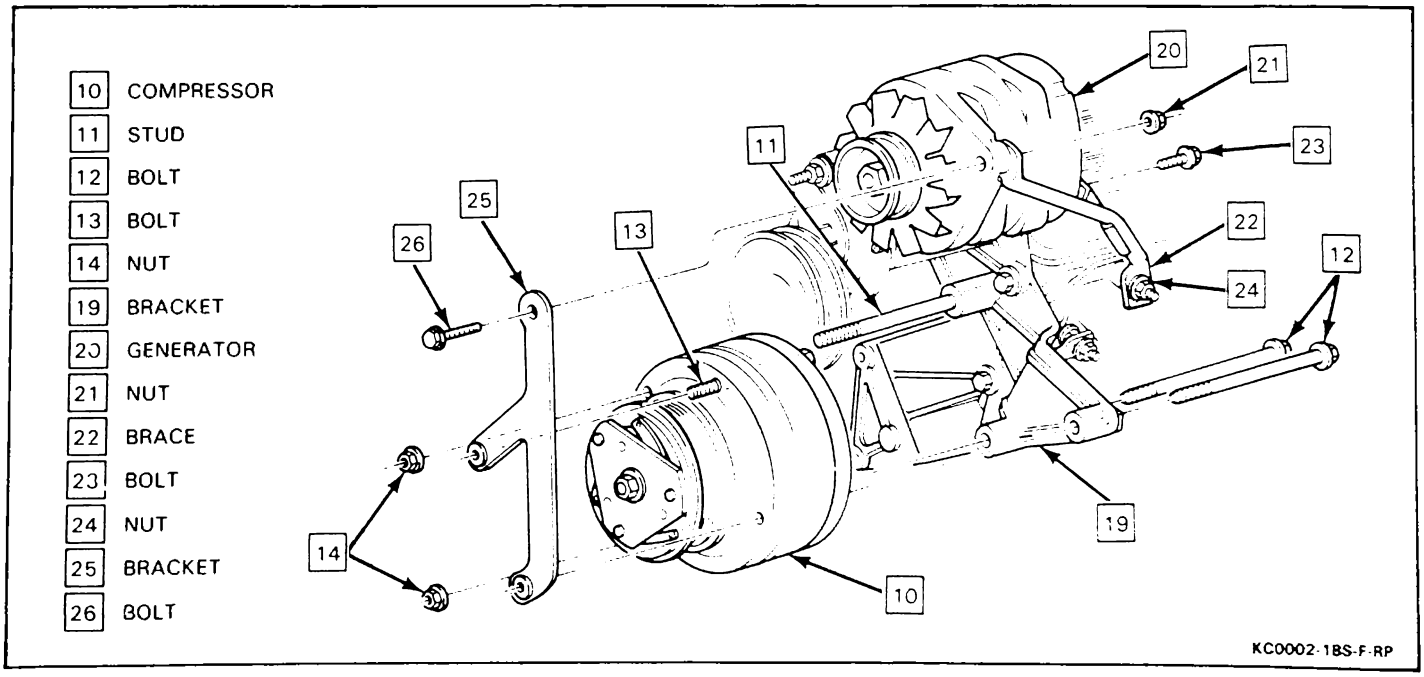

Figure 2 – Compressor Removed

installing them. Use care not to damage the O-rings when fitting them into the cavities.
- Install the connector block to the rear head of the compressor (10) with the bolt and O-ring.

Tighten

- Bolt to 34 N·m (25 lb. ft.).

6. Electrical connectors to the compressor (10).
7. Drive belt tensioner pulley and center bolt.

Tighten

- Pulley center bolt to 76 N·m (56 lb. ft.).

8. Intercooler hoses at the turbocharger and the throttle body.
9. Left intercooler bracket.
10. Upper bolts to the left intercooler bracket.
- Raise the vehicle and suitably support as described in the 1989 Firebird Service Manual.

11. Lower bolt to left intercooler bracket.
12. Right intercooler bracket.
13. Nuts and bolts to right intercooler bracket.
- Lower the vehicle.

14. Serpentine drive belt. Refer to COOLING AND RADIATOR (SEC. 6B) of this supplement.
15. Turbocharger inlet hose.

Inspect

- Check the serpentine drive belt tension. Refer to COOLING AND RADIATOR (SEC. 6B) of this supplement.

16. Refrigerant.
    - Evacuate and charge the system as described in the 1989 Firebird Service Manual.
    - Test system performance if the compressor (10) was serviced. Refer to the 1989 Firebird Service Manual.

GENERATOR, COMPRESSOR AND POWER STEERING PUMP BRACKET

Figure 3

Remove or Disconnect

1. Negative (-) battery cable.
2. Serpentine drive belt. Refer to COOLING AND RADIATOR (SEC. 6B) of this supplement.
3. Bolt (26) and nut (21).
4. Bolt (23).
5. Compressor. Refer to "Compressor" in this section.
6. Stud (27).
7. Generator (20).
    - Carefully place the generator (20) and its connected wiring out of the way on the engine.
8. Generator support bracket (25).
9. Screws (15) retaining the tensioner (16).
10. Tensioner (16).
11. Power steering lines from pump.
12. Power steering pump attaching bolts (29).
    - Turn the power steering pump pulley to align the access holes in the pulley with the two attaching bolts (29) and remove the bolts (29).
13. Power steering pump (28).
14. Bolts (17 and 18) and generator, compressor and power steering pump bracket (19).
15. Nut (24) and generator brace (22) from exhaust manifold mounting stud if necessary.

Inspect

- Generator, compressor and power steering pump bracket (19) for cracks, distortion and damaged stud mounting threads. Replace if necessary.
- Generator support bracket (25) for distortion and damaged threads. Repair or replace as necessary.
- Generator brace (22) for distortion, damage and loose attachment of the bolt (23) at the end of the short arm that connects to the back of the generator (20).
- Compressor mounting stud (11) in the generator, compressor and power steering bracket (19) for damaged threads, corrosion and loose attachment of the threaded end in the bracket boss. Remove and replace the stud (11) if necessary.
- Screws, nuts and bolts for damaged threads, distorted flats and corrosion. Replace if necessary. See "Notice" on page 1B-1 of this section.

Install or Connect

NOTICE: See "Notice" on page 1B-1 of this section.

Important

- Before placing the generator, compressor and power steering pump bracket (19) in position on the front of the left cylinder head, put the lower compressor through bolt (12) in place from the rear of the bracket (19). The bolt (12) cannot be installed after the bracket (19) is installed.

1. Generator, compressor and power steering pump bracket (19) with assembled through bolt (12) and bolts (17 and 18).
    - Install the two long bolts (17) to the outboard holes in the generator, compressor and power steering pump bracket (19) and install the short bolt (18) to the inboard hole in the bracket (19).

Tighten

- Bolts (17 and 18) to 50 N·m (37 lb. ft.).

2. Power steering pump (28) and attaching bolts (29).
    - Turn the power steering pump pulley to align the access holes in the pulley with the two attaching bolt holes in the pump body, then install the two attaching bolts (29).

Tighten

- Attaching bolts (29) to 27 N·m (20 lb. ft.).

3. Power steering lines to pump.
4. Tensioner (16) and attaching screws (15).

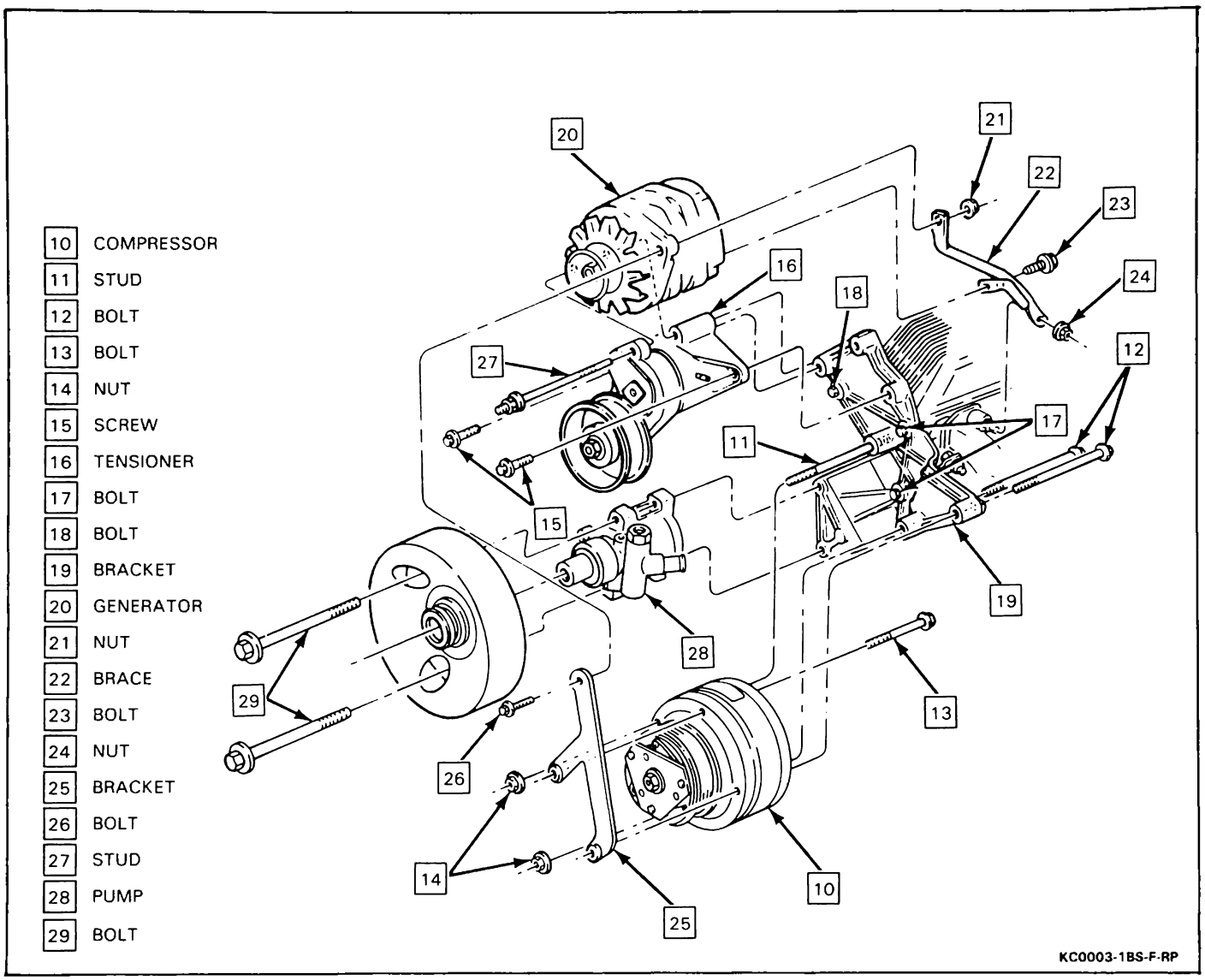

Figure 3 — Generator, Compressor and Power Steering Pump Bracket

Tighten

- Screws (15) to 50 N·m (37 lb. ft.).

NOTICE: The battery cable to the generator terminal must be routed inboard of the compressor mounting bosses on the generator, compressor and power steering pump bracket, and must be routed outboard of the tensioner mounting bosses. Care should be taken during the following steps to ensure that the cable is not pinched. A pinched cable can affect charging system performance.

5. Compressor. Refer to "Compressor" in this section.
6. Generator (20) and stud (27).

Tighten

- Stud (27) to 50 N·m (37 lb. ft.).

7. Bolt (26) and nut (21) to generator (20) and brace (22).
   - Tighten nut (21) finger-tight.
8. Bolt (23).

Tighten

- Bolt (23) to 50 N·m (37 lb. ft.).
- In the following sequence:
  - Nut (24) to 17 N·m (13 lb. ft.).
  - Long compressor through bolt (12) to generator support bracket (25) to 50 N·m (37 lb. ft.).
  - Short compressor through bolt (13) to 50 N·m (37 lb. ft.).
  - Nut (21) to 50 N·m (37 lb. ft.).

9. Serpentine drive belt. Refer to COOLING AND RADIATOR (SEC. 6B) of this supplement.
10. Negative (-) battery cable.

Inspect

- Check the serpentine drive belt tension. Refer to COOLING AND RADIATOR (SEC. 6B) of this supplement.
- Refrigerant hose connections for leaks.
- Power steering hoses for leaks.

SPECIFICATIONS

FASTENER TORQUE SPECIFICATIONS

Heater Pipe Clip Retaining Screw	1.4 N·m (12 lb. in.)
Heater Hose Clamp Screws	1.3 N·m (11 lb. in.)
Heater Inlet Pipe-to-Intake Manifold Coupling	27 N·m (20 lb. ft.)
Condenser Retaining Screws	10 N·m (89 lb. in.)
Condenser-to-Liquid Line Fitting	16 N·m (12 lb. ft.)
Compressor-to-Condenser Line Fitting	23 N·m (17 lb. ft.)
Compressor Through Bolt and Stud Nuts	50 N·m (37 lb. ft.)
Generator-to-Support Bracket Bolt Nut	50 N·m (37 lb. ft.)
Compressor Through Bolts to Generator Support Bracket	50 N·m (37 lb. ft.)
Refrigerant Line Connector Block Bolt	34 N·m (25 lb. ft.)
Generator, Compressor and Power Steering Pump Bracket Bolts	50 N·m (37 lb. ft.)
Power Steering Pump Attaching Bolts	27 N·m (20 lb. ft.)
Tensioner Pulley Center Bolt	76 N·m (56 lb. ft.)
Tensioner Attaching Screws	50 N·m (37 lb. ft.)
Generator Mounting Stud	50 N·m (37 lb. ft.)
Generator-to-Brace Bolt	50 N·m (37 lb. ft.)
Generator Brace-to-Exhaust Manifold Stud Nut	17 N·m (13 lb. ft.)

SECTION 3B1

POWER STEERING GEAR AND PUMP

The following "Notice" applies to one or more steps in the assembly procedure of components in this portion of the manual as indicated at appropriate locations by the terminology "NOTICE: See "Notice" on page 3B1-1 of this section."

NOTICE: When fasteners are removed, always reinstall them at the same location from which they were removed. If a fastener needs to be replaced, use the correct part number fastener for that application. If the correct part number fastener is not available, a fastener of equal size and strength (or stronger) may be used. Fasteners that are not reused, and those requiring thread locking compound will be called out. The correct torque value must be used when installing fasteners that require it. If the above conditions are not followed, parts or system damage could result.

CONTENTS

General Information 3B1-1
On-Vehicle Service 3B1-1
Power Steering Hose Replacement 3B1-1
Pressure Hose 3B1-1
Return Hose 3B1-1
Reservoir-to-Pump Hose 3B1-2
Power Steering Hose Fitting 3B1-3
Power Steering Pump Replacement 3B1-3
Power Steering Pump Remote Reservoir Replacement 3B1-4
Generator Compressor and Power Steering Pump Bracket 3B1-4
Unit Repair 3B1-4
TC Series Power Steering Pump (Reverse Rotation) 3B1-4
Return Tube 3B1-4
Control Valve Assembly 3B1-4
Driveshaft Assembly and Seal 3B1-5
Rotating Group and Sleeve Assembly 3B1-7
Specifications 3B1-10

GENERAL INFORMATION

On-vehicle service and unit repair procedures for the TC series (reverse rotation) power steering pump with remote reservoir have been included in this supplement. All remaining service procedures are described in the 1989 Firebird Service Manual although the configuration of the pump and reservoir may vary.

ON-VEHICLE SERVICE

POWER STEERING HOSE REPLACEMENT

Figure 1

Pressure Hose

Remove or Disconnect

- Place drain pan under power steering gear and pump.
1. Pressure hose (7) from the steering gear (6).
- Raise and suitably support vehicle as described in the 1989 Firebird Service Manual.
2. Pressure hose (7) from the steering pump fitting (8).

Install or Connect

NOTICE: Hoses must be installed to clear each other and all surrounding parts to prevent chafing. Use a minimum clearance of 12.7mm (0.50 inch). Hoses must not be twisted during installation. Do not bend or distort pipes to make installation easier. Keep hose ends free from dirt and contaminants. Failure to follow these procedures could result in component damage.

NOTICE: See "Notice" on page 3B1-1 of this section.

1. Pressure hose (7) to steering pump fitting (8).

Tighten

- Nut to 27 N·m (20 lb. ft.).

- Lower vehicle.
2. Fitting of pressure hose (7) to steering gear (6).

Tighten

- Fitting to 27 N·m (20 lb. ft.).

- Fill power steering pump reservoir with fluid as described in the 1989 Firebird Service Manual.
- Bleed the system as described in the 1989 Firebird Service Manual.

Return Hose

Remove or Disconnect

- Place a drain pan underneath remote reservoir (1) to catch draining fluid.
1. Clamp assembly (3) at steering gear outlet pipe (5).
2. Return hose (4) from steering gear outlet pipe (5).
3. Clamp assembly (3) at pump reservoir (1).
4. Return hose (4) from pump reservoir (1).

Install or Connect

NOTICE: See "Notice" on page 3B1-1 of this section.

NOTICE: Hoses must be installed to clear each other and all surrounding parts to prevent chafing.

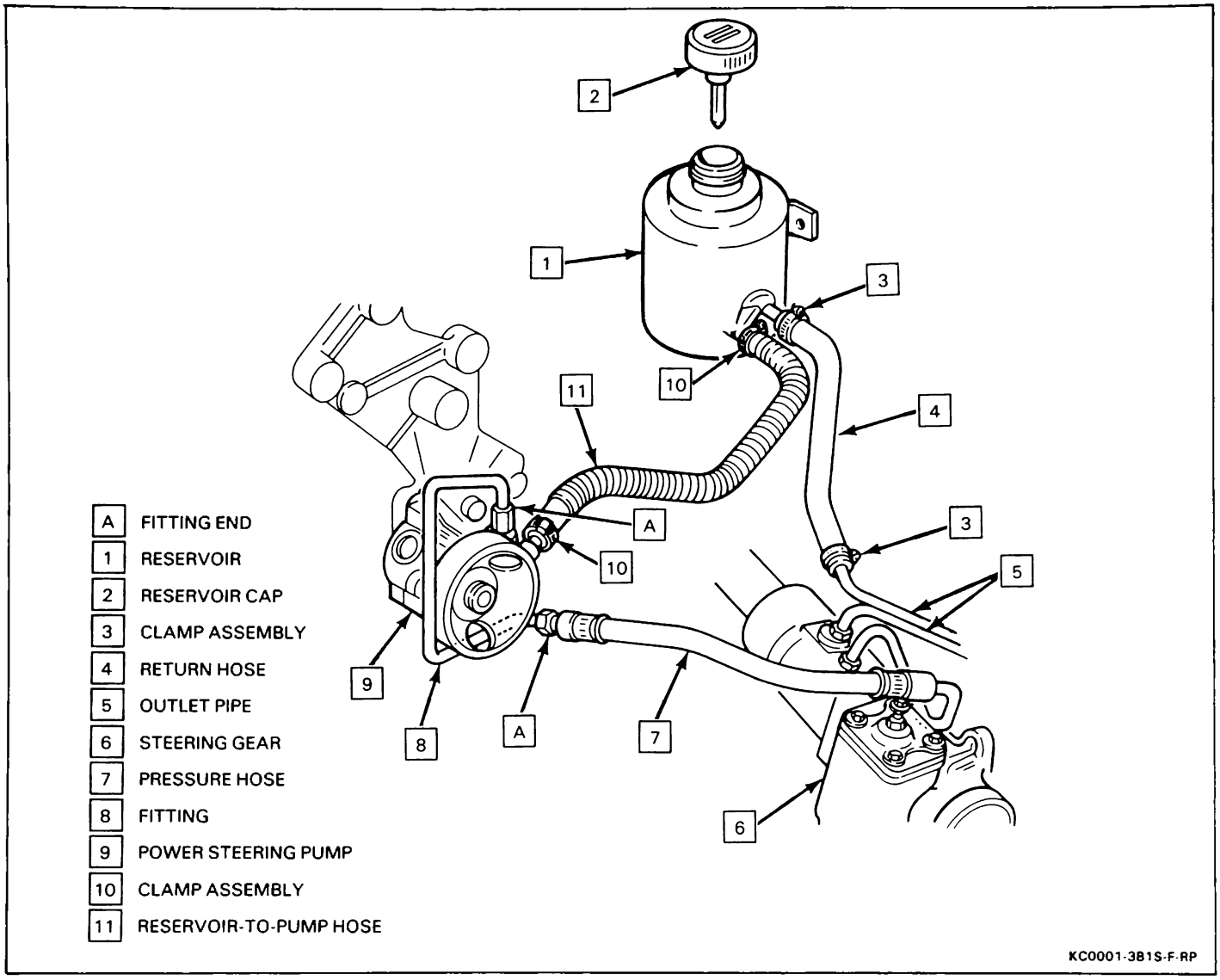

Figure 1 — Power Steering Hose Routing

Use a minimum clearance of 12.7 mm (0.50 inch). Hoses must not be twisted during installation. Do not bend or distort pipes to make installation easier. Keep hose ends free from dirt and contaminants. Failure to follow these procedures could result in component damage.

1. Return hose (4) to pump reservoir (1).
2. Clamp assembly (3) to hose at reservoir.

Tighten

- Clamp assembly (3) to 1.7 N·m (15 lb. in.).

3. Return hose (4) to steering gear outlet pipe (5).
4. Clamp assembly (3) to return hose (4) at the steering gear outlet pipe (5).

Tighten

- Clamp assembly (3) to 1.7 N·m (15 lb. in.).

- Fill power steering pump reservoir (1) with fluid as described in the 1989 Firebird Service Manual.
- Bleed the system as described in the 1989 Firebird Service Manual.

Reservoir-to-Pump Hose

Remove or Disconnect

- Place a drain pan underneath remote reservoir (1) to catch draining fluid.

1. Clamp assembly (10) and reservoir-to-pump hose (11) from remote reservoir (1).
   - Drain fluid into pan.

- Raise and suitably support vehicle as described in the 1989 Firebird Service Manual.

2. Clamp assembly (10) and reservoir-to-pump hose (11) from power steering pump (9).

Install or Connect

NOTICE: Hoses must be installed to clear each other and all surrounding parts to prevent chafing. Use a minimum clearance of 12.7 mm (0.50 inch). Hoses must not be twisted during installation. Do not bend or distort pipes to make installation easier. Keep hose ends free from dirt and contaminants. Failure to follow these procedures could result in component damage.

NOTICE: See "Notice" on page 3B1-1 of this section.

Tighten

- Clamp assembly (10) to 1.7 N·m (15 lb. in.).

1. Reservoir-to-pump hose (11) and clamp assembly (10) to power steering pump (9).

Tighten

- Clamp assembly (10) to 1.7 N·m (15 lb. in.).

- Lower vehicle.

2. Reservoir-to-pump hose (11) and clamp assembly (10) to remote reservoir.

- Fill power steering pump reservoir with fluid as described in the 1989 Firebird Service Manual.
- Bleed the system as described in the 1989 Firebird Service Manual.

Power Steering Hose Fitting

Remove or Disconnect

1. Fitting end from power steering pump (9).

- Raise and suitably support vehicle as described in the 1989 Firebird Service Manual.

2. Fitting end from power steering pressure hose.

Install or Connect

NOTICE: See "Notice" on page 3B1-1 of this section.

1. Fitting end to power steering pressure hose.

Tighten

- Fitting nut to 27 N·m (20 lb. ft.).

- Lower vehicle.

2. Fitting end to power steering pump.

Tighten

- Fitting nut to 27 N·m (20 lb. ft.).

- Fill power steering pump reservoir with fluid as described in the 1989 Firebird Service Manual.
- Bleed the system as described in the 1989 Firebird Service Manual.

POWER STEERING PUMP REPLACEMENT

Figure 2

Remove or Disconnect

- Turn steering wheel all the way to the left.

1. Negative (-) battery cable.
2. Serpentine drive belt (12). Refer to COOLING AND RADIATOR (SEC. 6B) of this supplement.
3. Left intercooler bracket. Refer to TURBOCHARGER (SEC. 6J) of this supplement.

- Raise and suitably support vehicle as described in the 1989 Firebird Service Manual.

4. Hoses. Refer to "Power Steering Hose Replacement" in this section.

- Align access holes of pulley with mounting holes on pump.

5. Bolts (14) through pulley access holes.
6. Power steering pump (9) and pulley (15) as an assembly.
7. Pulley (15) from power steering pump (9) as described in the 1989 Firebird Service Manual.

Install or Connect

NOTICE: See "Notice" on page 3B1-1 of this section.

1. Pulley (15) to power steering pump (9) as described in the 1989 Firebird Service Manual.
2. Power steering pump (9) and pulley (15) as an assembly to the mounting bracket (16).

- Align access holes on pulley with mounting holes on the pump.

3. Bolts (14) through pulley access holes.

Tighten

- Bolts (14) to 27 N·m (20 lb. ft.).

4. Hoses. Refer to "Power Steering Hose Replacement" in this section.

- Lower vehicle.

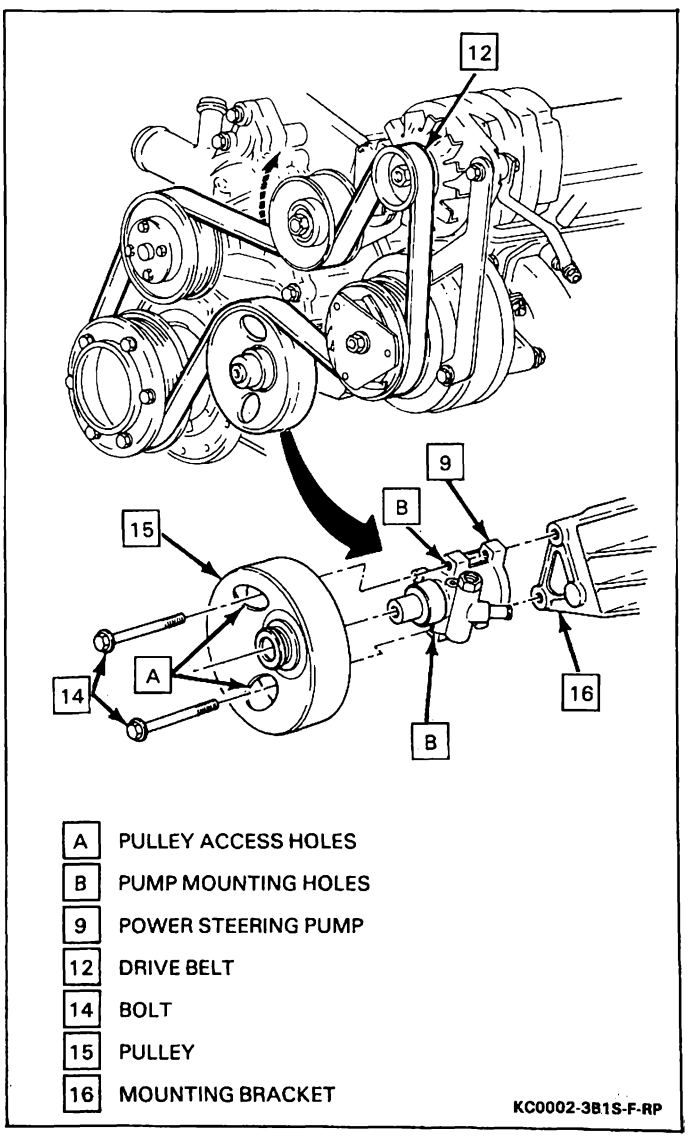

Figure 2 — Power Steering Pump Mounting

5. Left intercooler bracket. Refer to TURBOCHARGER (SEC. 6J) of this supplement.
6. Pump drive belt (12) as described in the 1989 Firebird Service Manual.
7. Negative (-) battery cable.

- Fill power steering reservoir with fluid as described in the 1989 Firebird Service Manual.
- Bleed the system as described in the 1989 Firebird Service Manual.

Inspect

- System for proper fluid level and leaks.

POWER STEERING PUMP REMOTE RESERVOIR REPLACEMENT

Figures 1 and 3

Remove or Disconnect

- Siphon power steering fluid from remote reservoir.

1. Clamp assemblies (3 and 10) from hoses at reservoir.
2. Return hose (4) and reservoir-to-pump hose (11) from reservoir.
3. Screw (19) from clamp on reservoir bracket.
4. Reservoir (1).

Install or Connect

NOTICE: See "Notice" on page 3B1-1 of this section.

1. Reservoir (1).
2. Screw (19) to clamp on reservoir bracket.
3. Return hose (4) and reservoir-to-pump hose (11) to reservoir (1).
4. Clamp assemblies (3 and 10) to hose connections at reservoir (1).

Tighten

- Clamp assemblies (3 and 10) to 1.7 N·m (15 lb. in.).

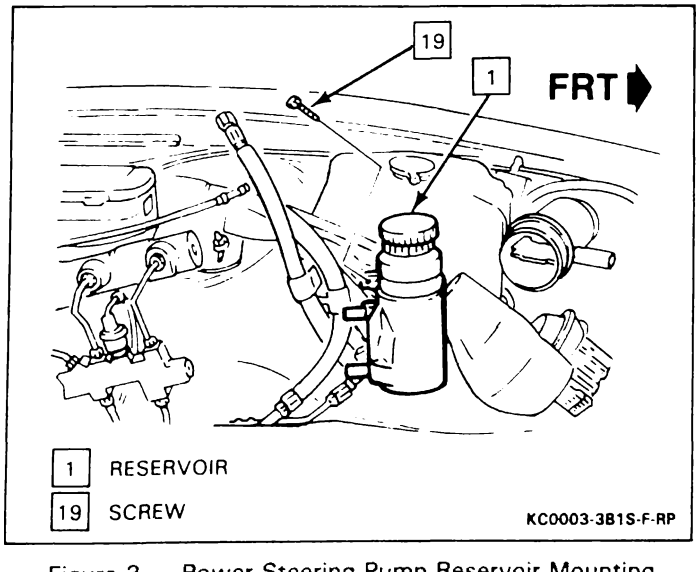

Figure 3 — Power Steering Pump Reservoir Mounting

- Fill reservoir (1) with fluid as described in the 1989 Firebird Service Manual.
- Bleed the system as described in the 1989 Firebird Service Manual.

GENERATOR, COMPRESSOR AND POWER STEERING PUMP BRACKET

For the removal and installation procedures for the generator, compressor and power steering pump mounting bracket refer to MANUALLY CONTROLLED AIR CONDITIONING (SEC. 1B) of this supplement.

UNIT REPAIR

TC SERIES POWER STEERING PUMP (REVERSE ROTATION)

Return Tube

Figures 4 through 6

Remove or Disconnect

1. Pump assembly from vehicle if necessary for access. Refer to "Power Steering Pump Replacement" in this section.

   NOTICE: Plug return tube (15) to prevent foreign materials from entering the pump and causing damage to the component.

2. Return tube (15) using tap, nut, and washers (Figure 5).

Install or Connect

- Remove plug and any foreign materials that may have entered the pump before installing new return tube (15).
- Coat end of return tube (15) using Loctite solvent 75559 and Loctite adhesive 290, or equivalent.

1. Return tube (15) into pump housing (1) using a press until tube bottoms in pump housing (1).
2. Pump assembly to the vehicle, if removed. Refer to "Power Steering Pump Replacement" in this section.

Control Valve Assembly

Figures 4 and 7

Remove or Disconnect

1. Pump assembly from vehicle if necessary for access. Refer to "Power Steering Pump Replacement" in this section.
2. O-ring union fitting (23) and O-ring seal (22) from pump housing (1).
3. O-ring seal (22) from O-ring union fitting (23).
4. Control valve assembly (21) from pump housing (1).
5. Flow control spring (20) from pump housing (1).

Install or Connect

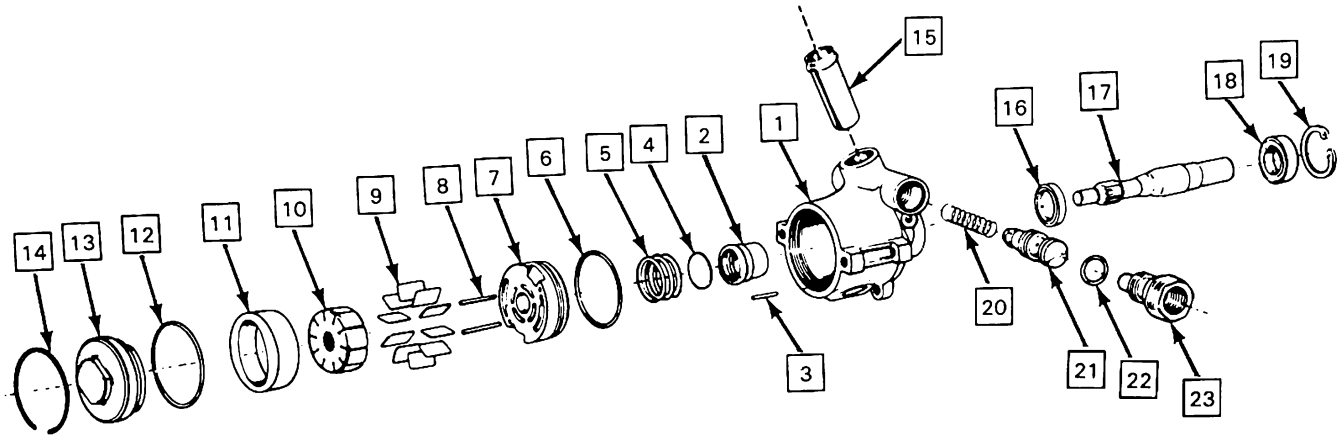

1	PUMP HOUSING	15	RETURN TUBE
2	SLEEVE	16	DRIVESHAFT SEAL
3	DOWEL PIN	17	DRIVESHAFT
4	O-RING SEAL	18	BALL BEARING
5	PRESSURE PLATE SPRING	19	RETAINING RING
6	O-RING SEAL	20	FLOW CONTROL SPRING
7	PRESSURE PLATE	21	CONTROL VALVE ASSEMBLY
8	PUMP RING DOWEL PIN	22	O-RING SEAL
9	VANE	23	O-RING UNION FITTING
10	PUMP ROTOR		
11	PUMP RING		
12	O-RING SEAL		
13	THRUST PLATE		
14	THRUST PLATE RETAINING RING		

KC0004-3B1S-F-RP

Figure 4 — Hydraulic Pump Assembly (TC Series-Reverse Rotation)

NOTICE: See "Notice" on page 3B1-1 of this section.

1. Flow control spring (20) to pump housing (1).
2. Control valve assembly (21) to pump housing (1).
3. New O-ring seal (22) onto O-ring union fitting (23).
4. O-ring union fitting (23) into pump housing (1).

Tighten

- Fitting (23) to 75 N·m (55 lb. ft.).

5. Pump assembly into vehicle, if removed. Refer to "Power Steering Pump Replacement" in this section.

Driveshaft Assembly and Seal

Figures 4 and 8 through 12

Remove or Disconnect

1. Pump assembly from vehicle, if necessary for access. Refer to "Power Steering Pump Replacement" in this section.
2. Retaining ring (19) from pump housing (1).
3. Driveshaft (17) and ball bearing (18) from pump housing (1).
   - If a clearance exists between the driveshaft shoulder and the bearing inner race, measure the clearance using a feeler gage before removing the bearing to aid installation.
4. Ball bearing (18) from driveshaft (17).
5. Driveshaft seal (16) from pump housing (1) using a screwdriver.

Clean

- All parts in power steering fluid.
- Dry parts.

Inspect

- Driveshaft (17), driveshaft splines and ball bearing (18) for scoring or pitting. Replace parts as necessary.

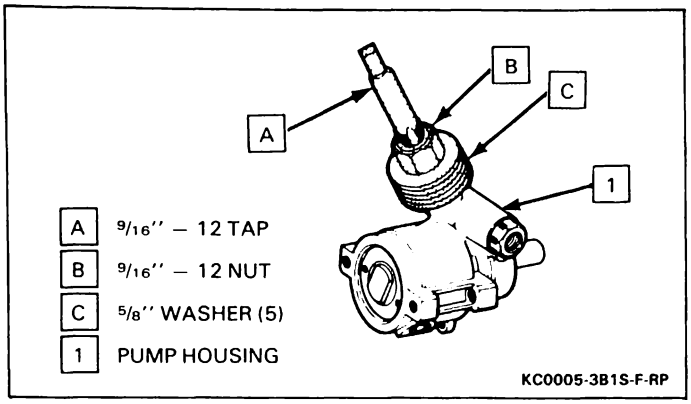

Figure 5 — Removing Return Tube

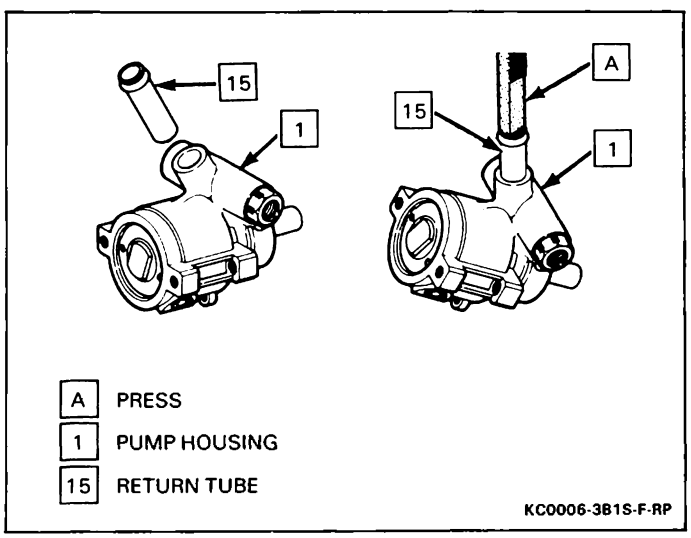

Figure 6 — Installing Return Tube

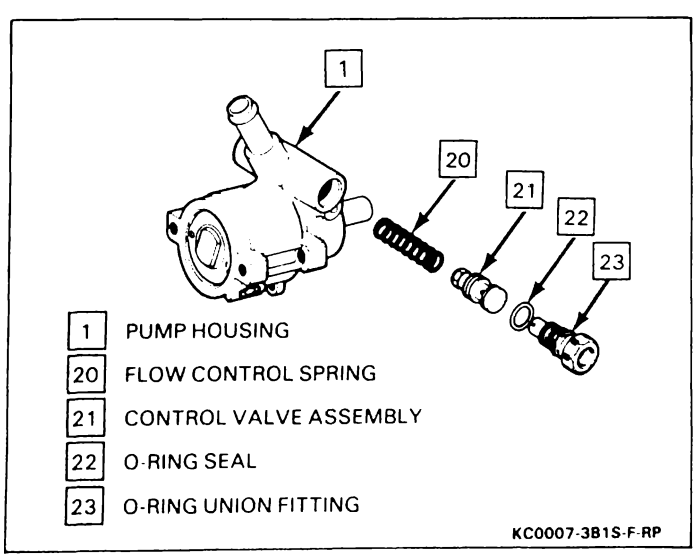

Figure 7 — Control Valve Assembly

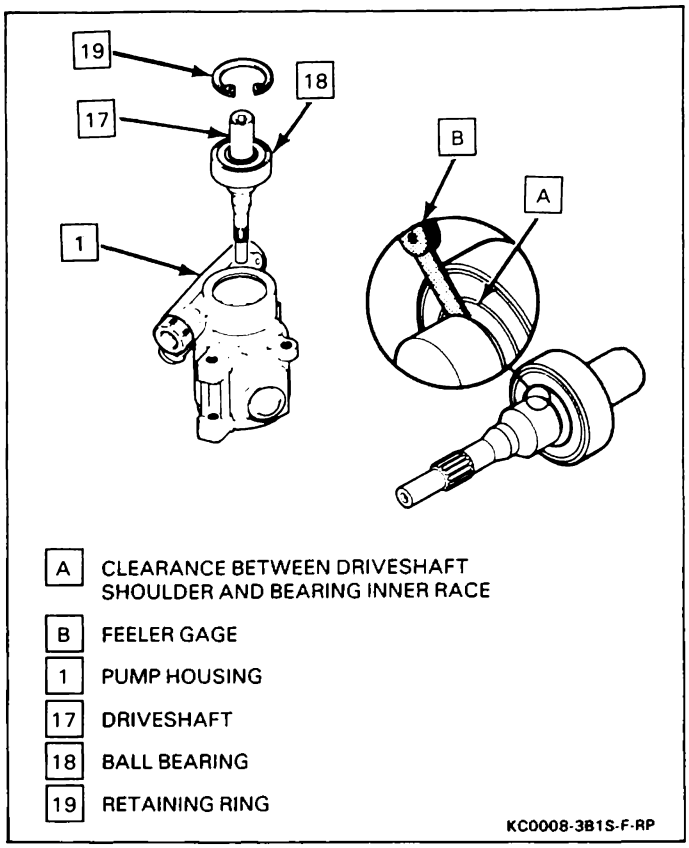

Figure 8 — Driveshaft and Ball Bearing

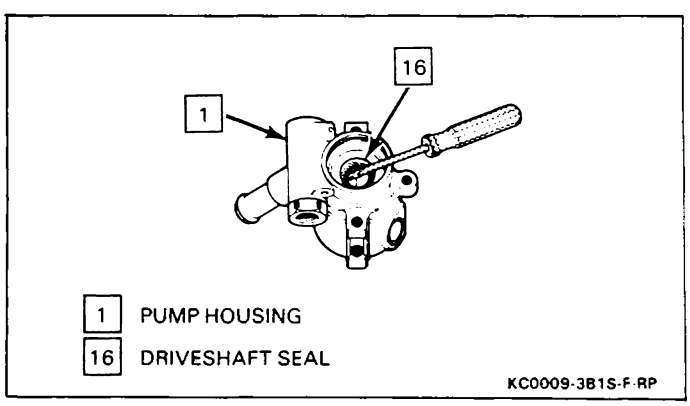

Figure 9 — Removing Driveshaft Seal

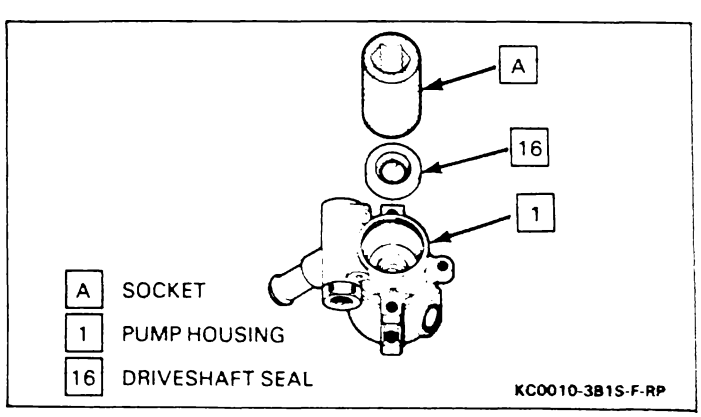

Figure 10 — Installing Driveshaft Seal

Install or Connect

- Lubricate new driveshaft seal (16) with power steering fluid.

1. Driveshaft seal (16) into pump housing (1) using a suitable socket.
2. Ball bearing (18) to driveshaft (17) using a press.
   - Press bearing to the shoulder of the driveshaft or to the clearance measured prior to removing the old bearing (Figure 11).
3. Driveshaft (17) and ball bearing (18) into pump housing (1).

- Rotate driveshaft (17) so that shaft serration engages with pump rotor (10).

4. Retaining ring (19) to pump housing (1).
   - Position large lug so that beveled side of ring is properly located.
5. Pump assembly to the vehicle, if removed. Refer to "Power Steering Pump Replacement" in this section.

Rotating Group and Sleeve Assembly

Figures 4, 8, and 11 through 22

Remove or Disconnect

1. Pump assembly from vehicle, if necessary for access. Refer to "Power Steering Pump Replacement" in this section.
2. Retaining ring (19) from pump housing (1).
3. Driveshaft (17) and ball bearing (18) from pump housing.
   - If a clearance exists between the driveshaft shoulder and the bearing inner race, measure the clearance before removing the bearing to aid installation.
4. Thrust plate retaining ring (14) from pump housing (1) using a punch.
5. Thrust plate (13) using a 5/8-inch piece of bar stock or suitable brass drift. Press on pressure plate hub from driveshaft side of pump housing (1).
6. O-ring seal (12).
7. Pump ring (11).
8. Pump rotor (10).
9. Ten vanes (9).
10. Two pump ring dowel pins (8).
11. Pressure plate (7) using a press, if necessary.
12. O-ring seal (6) from pressure plate (7).
13. Pressure plate spring (5).
14. Dowel pin (3).
15. O-ring seal (4) from sleeve (2).
16. Sleeve (2) using a punch on the driveshaft side of the pump housing (1).

Clean

- All parts in power steering fluid.
- Dry all parts.

Inspect

- Pressure plate (7), vanes (9), pump ring (11), driveshaft (17) and splines, and ball bearing (18) for scoring, pitting or chatter marks. Replace parts as necessary.

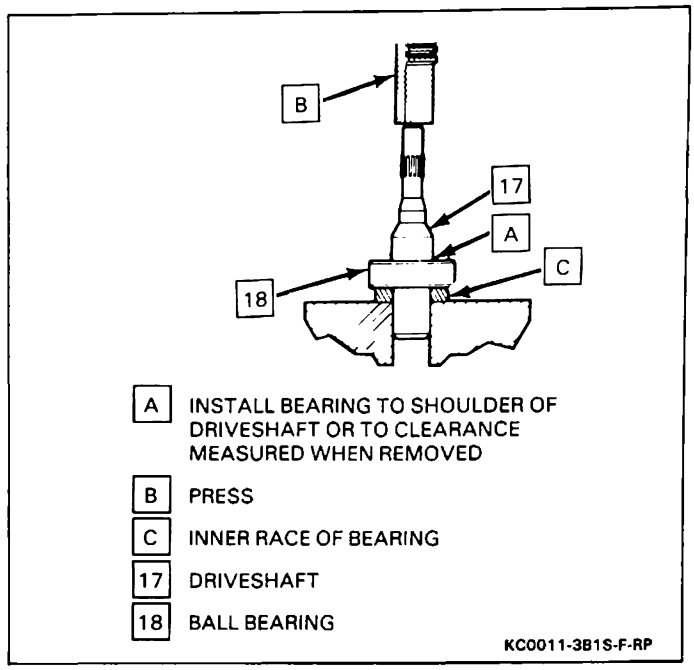

Figure 11 — Ball Bearing Assembly to Driveshaft

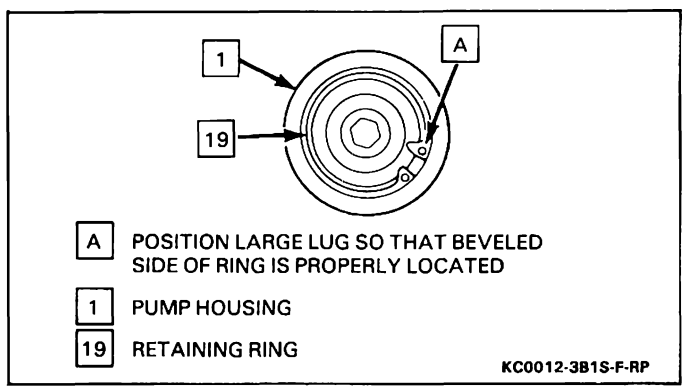

Figure 12 — Driveshaft Retaining Ring Installed

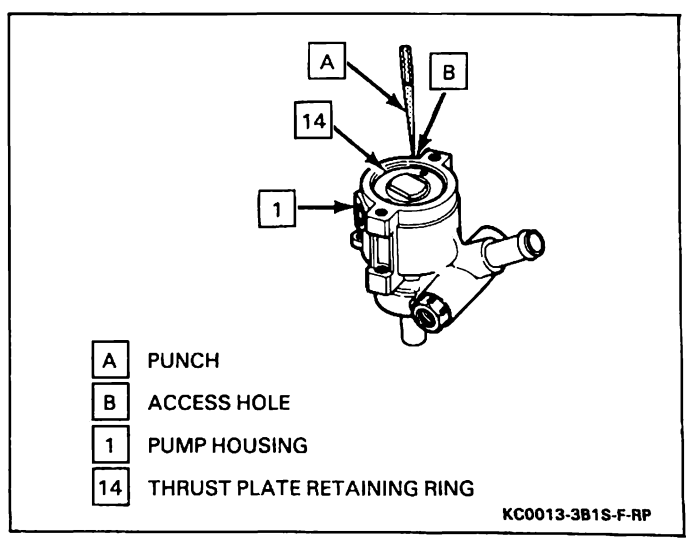

Figure 13 — Removing Retaining Ring

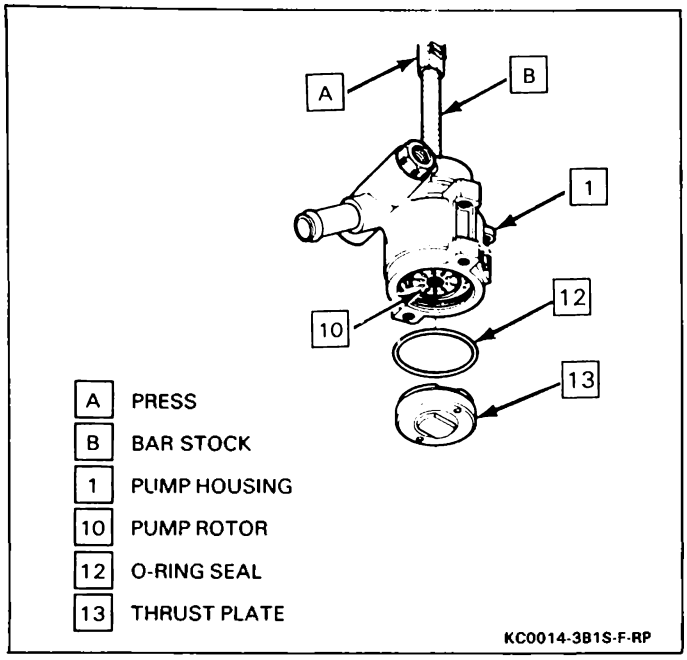

Figure 14 — Removing Thrust Plate

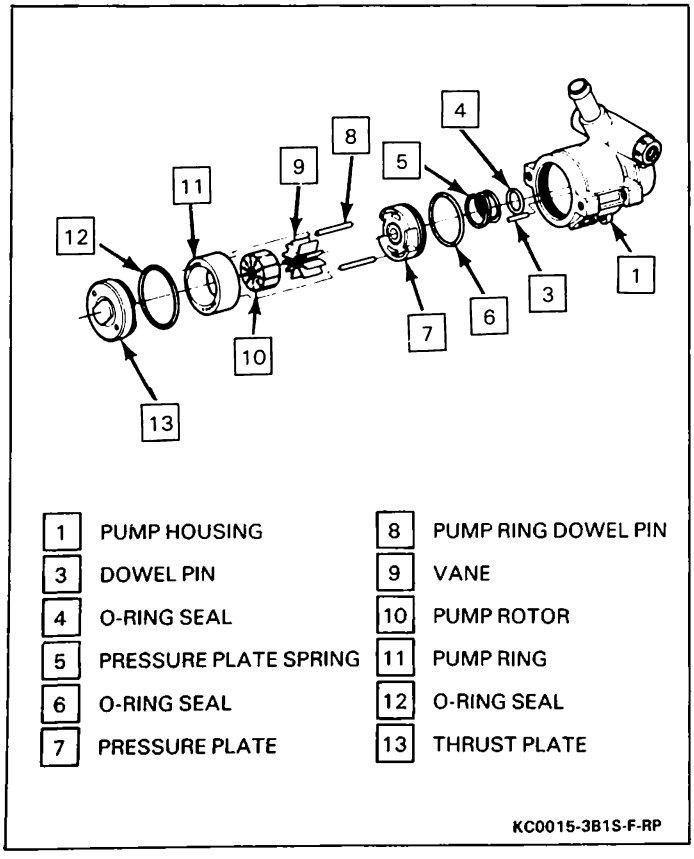

Figure 15 — Rotating Group

Install or Connect

1. New sleeve (2) using a press and suitable socket to seat sleeve (2) into pump housing (1) from pressure plate side.
- Lubricate new O-ring seal (4) with power steering fluid.
2. O-ring seal (4) into groove in sleeve (2).
3. Dowel pin (3) into pump housing (1).
4. Pressure plate spring (5).
- Lubricate new O-ring seal (6) with power steering fluid.
5. O-ring seal (6) into groove in pressure plate (7).
- Mark top of pressure plate (7) directly over the dowel pin hole in the plate. This will help line up the hole with the dowel pin (3) to ensure dowel pin (3) and hole in pressure plate (7) engage properly.
6. Pressure plate (7).

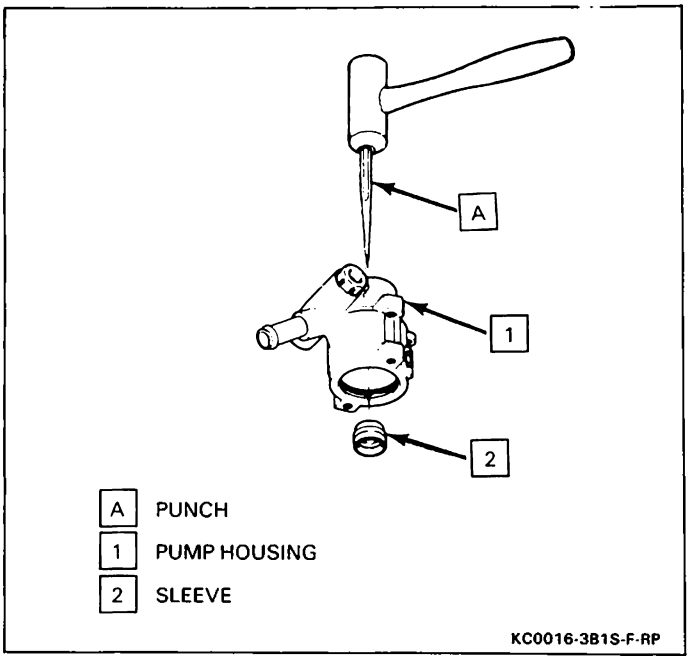

Figure 16 — Removing Sleeve

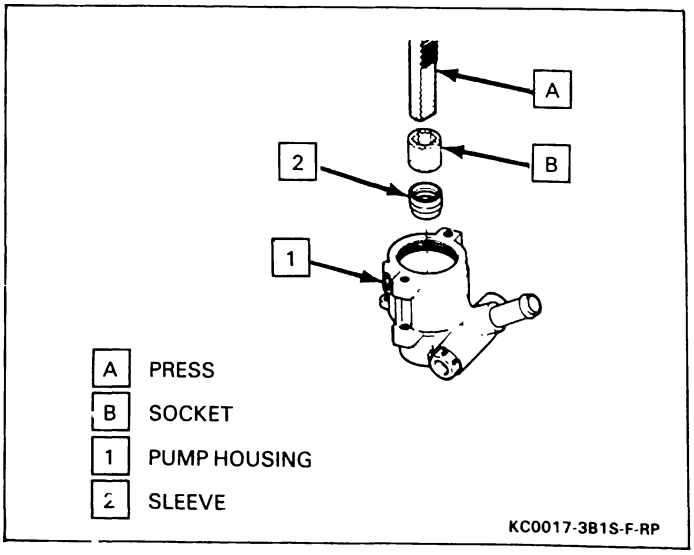

Figure 17 — Installing Sleeve

7. Two pump ring dowel pins (8).
8. Pump rotor (10) with counterbore facing driveshaft end of pump housing (1).
9. Ten vanes (9) into slots in pump rotor (10).
10. Pump ring (11) over pump ring dowel pins (8) with identification marks facing downward toward pressure plate (7).
- Lubricate new O-ring seal (12) with power steering fluid.
11. O-ring seal (12) into groove in pump housing (1).
- Lubricate outer edge of thrust plate (13).
12. Thrust plate (13) into pump housing (1).
    - Dimples in thrust plate must line up with bolt holes in pump housing (1) to ensure thrust plate (13) engages pump ring dowel pins (8).
- Press down on thrust plate (13) far enough to install thrust plate retaining ring (14).
13. Thrust plate retaining ring (14) into groove in pump housing (1).
    - Opening in retaining ring should be centered with bolt hole in pump housing (1) nearest to the access hole (Figure 22).
14. Ball bearing (18) to the driveshaft (17).
    - Press bearing to the shoulder of the driveshaft or to the clearance measured prior to removing the old bearing.
15. Driveshaft (17) and ball bearing (18) into pump housing (1).
- Rotate driveshaft (17) so that shaft serration engages with pump rotor (10).
16. Retaining ring (19) to pump housing (1).
17. Pump assembly to the vehicle, if removed. Refer to "Power Steering Pump Replacement" in this section.

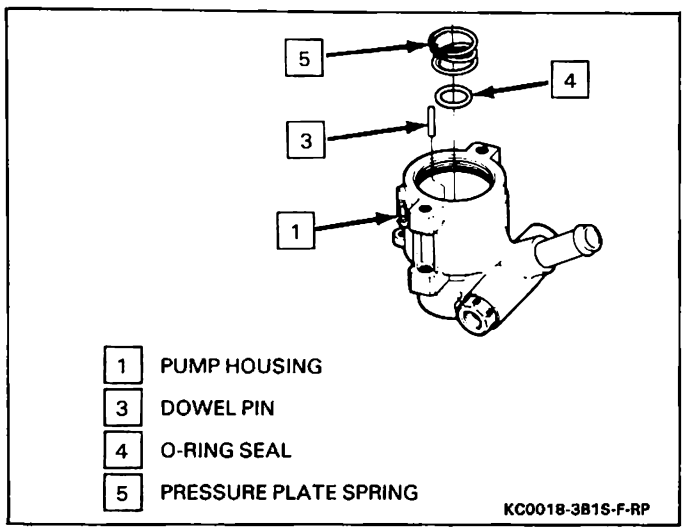

Figure 18 — O-Ring Seal, Spring, and Dowel Pin

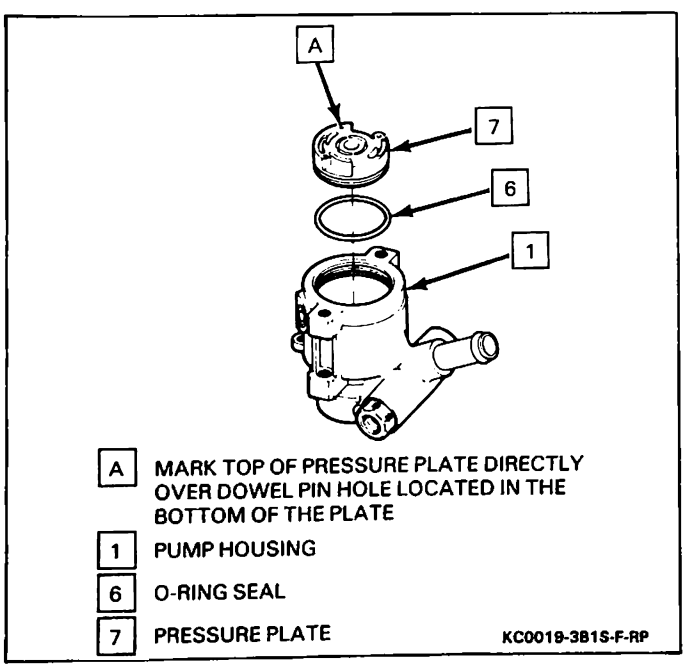

Figure 19 — Installing O-Ring Seal and Pressure Plate

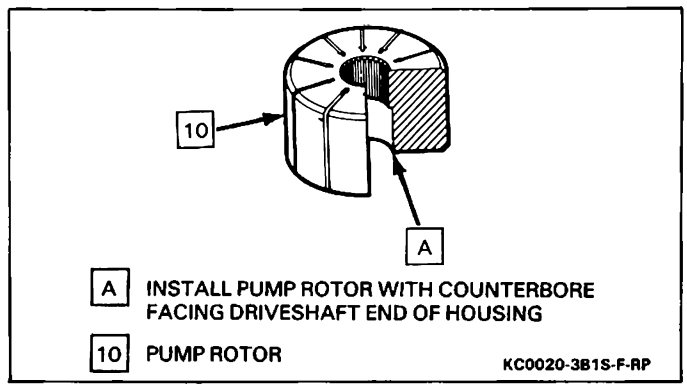

Figure 20 — Installing Rotor

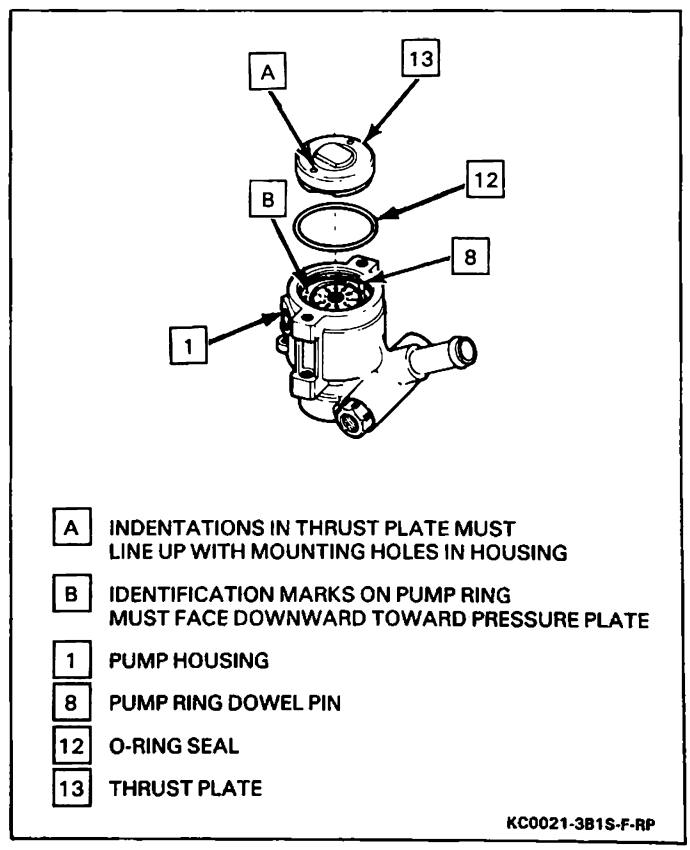

Figure 21 — Installing O-Ring Seal and Thrust Plate

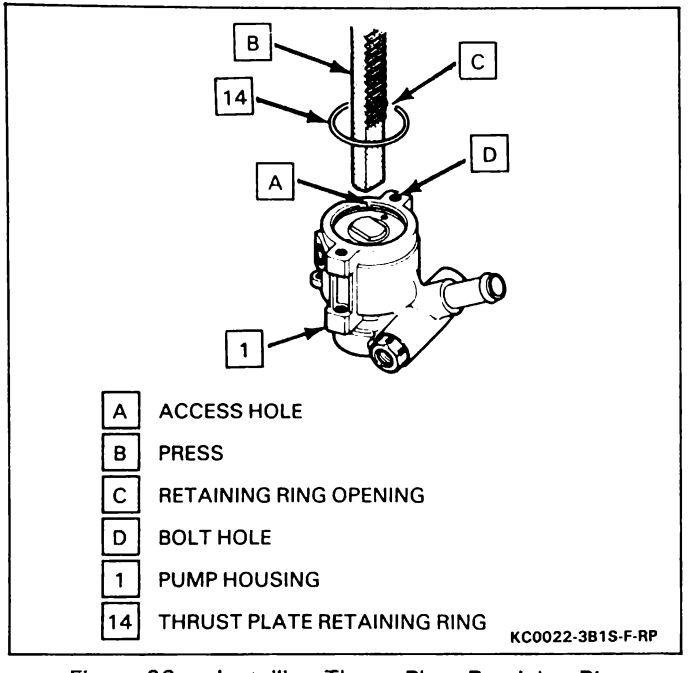

Figure 22 — Installing Thrust Plate Retaining Ring

SPECIFICATIONS

FASTENER TORQUES

Pressure Hose Fitting	27 N·m (20 lb. ft.)
Return Hose Clamps	1.7 N·m (15 lb. in.)
Reservoir-to-Pump Hose Clamp	1.7 N·m (15 lb. in.)
Power Steering Hose Fitting Nut	27 N·m (20 lb. ft.)
Power Steering Pump Mounting Bolt	27 N·m (20 lb. ft.)
Power Steering Pump O-Ring Union Fitting	75 N·m (55 lb. ft.)

SECTION 3C

FRONT SUSPENSION

CONTENTS

On-Vehicle Service 3C- 1
Stabilizer Shaft 3C- 1

ON-VEHICLE SERVICE

STABILIZER SHAFT

The stabilizer shaft brackets were redesigned for the Twentieth Anniversary Trans Am. This change does not affect service. Service the stabilizer shaft as described in the 1989 Firebird Service Manual.

SECTION 3D

REAR SUSPENSION

The following "Notice" applies to one or more steps in the assembly procedure of components in this portion of the manual as indicated at appropriate locations by the terminology: "NOTICE: See "Notice" on page 3D-1 of this section."

NOTICE: When fasteners are removed, always reinstall them at the same location from which they were removed. If a fastener needs to be replaced, use the correct part number fastener for that application. If the correct part number fastener is not available, a fastener of equal size and strength (or stronger) may be used. Fasteners that are not reused, and those requiring thread locking compound will be called out. The correct torque value must be used when installing fasteners that require it. If the above conditions are not followed, parts or system damage could result.

CONTENTS

On-Vehicle Service 3D-1
Torque Arm 3D-1
Specifications 3D-3

ON-VEHICLE SERVICE

TORQUE ARM

Figure 1

Remove or Disconnect

- Raise and suitably support vehicle, on other than a twin post type of hoist, as described in the 1989 Firebird Service Manual.
- Support rear axle assembly with an adjustable lifting device.

1. Track bar mounting bolt (7) and nut (10) at rear axle (18).

Clean

- Bolt (7) and nut (10) thoroughly of dirt and foreign materials.

- Loosen nut (3) and bolt (1) attaching track bar (21) to the body bracket (2).

NOTICE: Do not suspend rear axle by brake hose. Damage to the brake hose may result.

2. Rear brake hose clip at the underbody to allow axle to drop.
3. Right and left shock absorber lower nuts (19) and washers (20) attaching rear axle (18).

- Lower rear axle (18).

4. Coil springs (6) and insulators (5).
5. Torque arm bolts (8), nuts (11) and washers (9) at rear axle (18).
6. Crossmember. Refer to TRANSMISSION GENERAL INFORMATION AND ON-VEHICLE SERVICE (SEC. 7A) of this supplement.
7. Bolt (15) and nut (16) securing torque arm (12) to the transmission mount (13).
8. Torque arm (12) by sliding out of the bracket (14) on the transmission mount (13).

Install or Connect

NOTICE: See "Notice" on page 3D-1 of this section.

1. Torque arm (12) in bracket (14) on transmission mount (13) and loosely install bolt (15) and nut (16).
2. Torque arm bolts (8), nuts (11) and washers (9) at rear axle assembly.

Tighten

- Nuts (11) at rear axle (18) to 133 N·m (98 lb. ft.).
- Nut (16) at transmission mount to 27 N·m (20 lb. ft.).

3. Crossmember. Refer to TRANSMISSION GENERAL INFORMATION AND ON-VEHICLE SERVICE (SEC. 7A) of this supplement.
4. Coil springs (6) and insulators (5) in the spring seats.

- Raise rear axle (18) until it supports the weight of the vehicle at normal curb height position.

5. Right and left shock absorber lower nuts (19) and washers (20) attaching rear axle (18).

Tighten

- Nuts (19) to 95 N·m (70 lb. ft.).

6. Rear brake hose clip to the underbody.
7. Track bar mounting bolt (7) and nut (10) at rear axle.

Tighten

- Nut (10) at rear axle (18) to 80 N·m (59 lb. ft.).
- Nut (3) loosened at body bracket (2) to 83 N·m (61 lb. ft.).

- Remove adjustable lifting device.
- Lower vehicle.

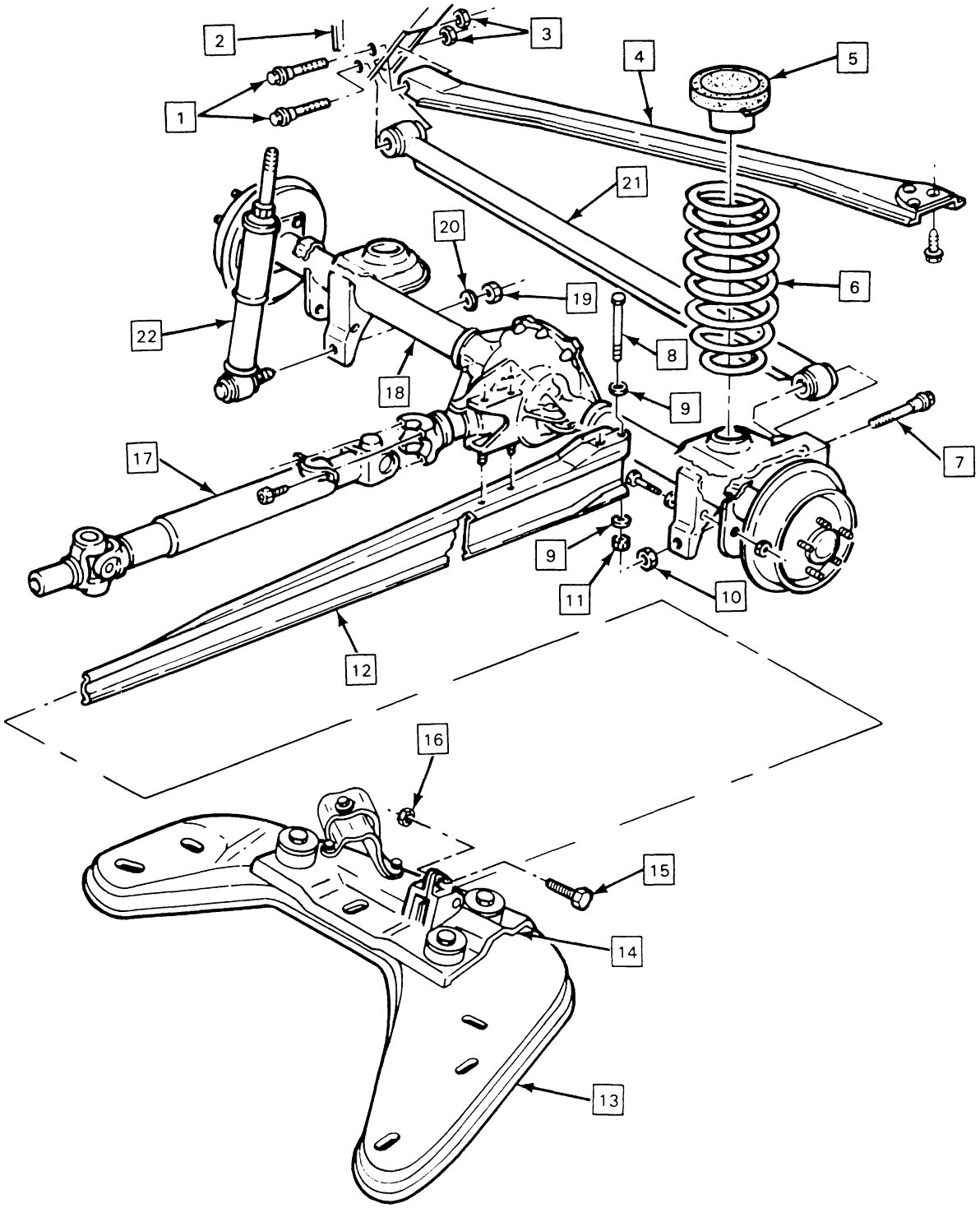

1	BOLT	7	BOLT	13	TRANSMISSION MOUNT	19	NUT
2	BODY BRACKET	8	BOLT	14	BRACKET	20	WASHER
3	NUT	9	WASHER	15	BOLT	21	TRACK BAR
4	TRACK BAR BRACE	10	NUT	16	NUT	22	SHOCK ABSORBER
5	INSULATOR	11	NUT	17	PROPELLER SHAFT		
6	SPRING	12	TORQUE ARM	18	REAR AXLE		

KC0001-3DS-F-RP

Figure 1 Torque Arm Assembly and Related Parts

SPECIFICATIONS

FASTENER TORQUE SPECIFICATIONS

Torque Arm-to-Axle Assembly Bolt	133 N·m (98 lb. ft.)
Torque Arm-to-Transmission Mount Bracket Bolt	27 N·m (20 lb. ft.)
Track Bar-to-Axle Assembly Bolt	80 N·m (59 lb. ft.)
Track Bar-to-Body Brace Bolt	83 N·m (61 lb. ft.)
Shock Absorber-to-Axle Nut	95 N·m (70 lb. ft.)

SECTION 6A5

3.8L V6 ENGINE

VIN CODE 7 — RPO LC2

The following "Notice" applies to one or more steps in the assembly procedure of components in this portion of the manual as indicated at appropriate locations by the terminology "NOTICE: See "Notice" on page 6A5-1 of this section".

NOTICE: When fasteners are removed, always reinstall them at the same location from which they were removed. If a fastener needs to be replaced, use the correct part number fastener for that application. If the correct part number fastener is not available, a fastener of equal size and strength (or stronger) may be used. Fasteners that are not reused, and those requiring thread locking compound will be called out. The correct torque value must be used when installing fasteners that require it. If the above conditions are not followed, parts or system damage could result.

CONTENTS

General Description 6A5-1
Engine Identification 6A5-1
Engine Construction 6A5-1
Lubrication System 6A5-2
On-Vehicle Service 6A5-3
Engine Assembly 6A5-3
Intake Manifold 6A5-4
Exhaust Manifold 6A5-6
Valve Rocker Covers 6A5-7
Rocker Arm Assemblies and Pushrods 6A5-8
Valve Lifters 6A5-9
Valve Lifter Diagnosis 6A5-9
Valve Lifter Replacement 6A5-10
Valve Lifter Leak-Down Rate Test 6A5-10
Cylinder Head 6A5-11
Valve Spring and Stem Seal 6A5-13
Valve, Spring and Retainer 6A5-13
Crankshaft Balancer 6A5-16
Front Cover 6A5-16
Front Cover Oil Seal 6A5-17
Timing Chain and Sprockets 6A5-18
Camshaft 6A5-18
Oil Pan 6A5-20
Oil Pump Pipe and Screen Assembly 6A5-20
Testing Oil Pressure 6A5-21
Priming Oil Pump 6A5-21
Oil Cooler and Adapter 6A5-21
Oil Pump Cover and Gears 6A5-22
Piston and Connecting Rod Assembly 6A5-23
Piston Fitting 6A5-25
Crankshaft 6A5-26
Connecting Rod and Main Bearings 6A5-27
Cylinder Block 6A5-29
Rear Main Bearing Upper Oil Seal 6A5-31
Rear Main Bearing Lower Oil Seal 6A5-31
Flywheel 6A5-32
Engine Mounts 6A5-33
Thread Repair 6A5-34
Specifications 6A5-35
Special Tools 6A5-38

GENERAL DESCRIPTION

ENGINE IDENTIFICATION

The 3.8L engine may be identified from the vehicle identification number. The code letter in the eighth digit location identifies the type and cubic inch displacement of the engine. Refer to GENERAL INFORMATION (SEC. 0A) of this supplement for additional information on identification of engine codes.

ENGINE CONSTRUCTION

The left bank of cylinders (as viewed from rear) is set slightly forward of the right bank. Starting at the front of the engine, cylinders in the left bank are numbered 1-3-5 and cylinders in the right bank are numbered 2-4-6. The crankshaft is supported in the crankcase by four bearings which are all specific.

The crankshaft is counterbalanced by weights cast integral with the crankshaft. Additional counterbalancing is obtained from the flywheel and balancer. The crankshaft is cross-drilled for better lubrication.

These engines are even-firing in that the cylinders fire at equal 120 degree intervals of crankshaft rotation. The location of the crankpins has been offset by 30 degrees in order to fire the cylinders at equal 120 degree intervals of the crankshaft rotation. The firing order of the V6 is 1-6-5-4-3-2.

The camshaft lobes and timing also reflect 120 degree spacing. The camshaft is supported in the crankcase by four steel-backed babbitt-lined bearings. It is driven from the crankshaft by sprockets and chain.

The cylinder heads are cast iron and incorporate integral valve stem guides and rocker arm shaft pedestals. Right and left cylinder heads are identical and interchangeable, although in service it is good practice to reinstall the cylinder heads on the side from which they are removed.

The intake manifold is bolted to the inner faces of both cylinder heads so that it connects with all inlet ports.

Each exhaust and intake valve has a spring of ample capacity to ensure positive seating throughout the operating speed range.

The valve rocker arms for each bank of cylinders pivot on pedestals which bolt to the cylinder head.

Hydraulic valve lifters and tubular pushrods are used to operate overhead rocker arms and valves of both banks of cylinders from a single camshaft. In addition to its normal function of a cam follower, each hydraulic valve lifter also serves as an automatic adjuster which maintains zero lash in the valve train under all operating conditions. By eliminating all lash in the valve train and also providing a cushion of oil to absorb operating shocks, the hydraulic valve lifter promotes quiet valve operation. It also eliminates the need for periodic valve adjustment to compensate for wear of parts.

Oil is fed to all lifters through galleries in the crankcase. The first few cycles of operation after the engine is started forces out all air and completely fills the plunger and lower chamber of each lifter with oil.

LUBRICATION SYSTEM

Figure 1

The engine lubrication system is the force-feed type in which oil is supplied under full pressure to the crankshaft, connecting rods, camshaft bearings and valve lifters. A controlled volume is supplied to the rocker arms and pushrods. All other moving parts are lubricated by gravity flow or splash.

The supply of oil is carried in the lower crankcase (oil pan) which is filled through a filler opening in the rocker arm cover. A removable oil level indicator (dip stick) rod on the left side of the crankcase is provided to check oil level.

The oil pump is located in the timing chain cover where it is connected by a passage in the cylinder crankcase to an oil screen housing and pipe assembly. The screen is submerged in the oil sump and has ample supply for all operating conditions. If the screen should become clogged for any reason, oil may be drawn into the system through the by-pass valve in the screen.

Oil is drawn into the pump through the screen and pipe assembly and a passage in the crankcase which connects to passages in the timing chain cover. All oil is discharged from the pump to the oil pump cover assembly. The cover assembly consists of an oil pressure relief valve, an oil filter by-pass valve, and a nipple for installation of an oil filter. The spring loaded oil pressure relief valve limits the oil pressure.

A full flow oil filter is externally mounted to the oil filter cover nipple on the lower right front side of the engine. Normally, all engine oil passes through the filter element. However, when the filter becomes clogged and approximately 69 kPa (10 psi) difference exists between the filter inlet and discharge, a spring loaded by-pass valve opens and channels unfiltered oil directly to the main oil galleries.

The main oil galleries run the full length of the crankcase and cut into the valve lifter guide holes to supply oil at full pressure to the lifters. Holes drilled from the crankshaft bearings to the main gallery intersect the cam bearing bores to supply oil to the cam bearings.

Holes drilled in the crankshaft carry oil from the crankshaft bearings to the connecting rod bearings. Pistons and cylinder walls are lubricated by oil thrown off the crankshaft and by connecting rod splash. Piston pins are lubricated by splash.

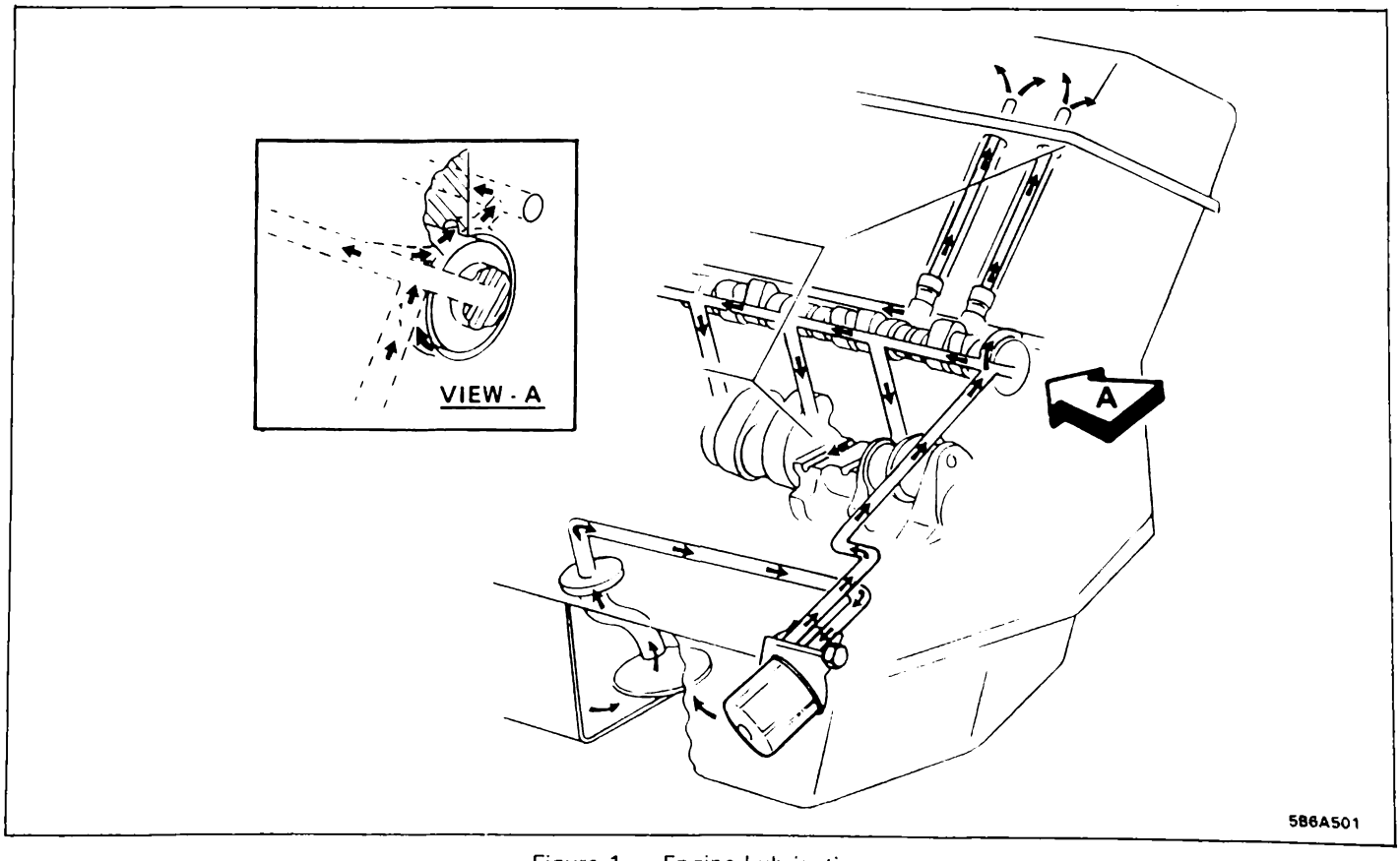

Figure 1 — Engine Lubrication

A drilled hole in the camshaft allows oil to flow from the front camshaft bearing journal to the front camshaft sprocket. The oil stream lubricates the timing chain and sprockets by splash.

Each rocker arm and valve is supplied with oil through the tubular pushrod. This oil comes from the inside of the lifter, passing around the metering valve and through a hole in the lifter pushrod seat. Oil from the pushrod passes through a hole in the rocker arm pushrod seat, and emerges on top of the pushrod seat boss.

ON-VEHICLE SERVICE

ENGINE ASSEMBLY

Remove or Disconnect

1. Hood as described in the 1989 Firebird Service Manual.
2. Negative (-) battery cable.
3. Air inlet tube from turbocharger.
- Discharge air conditioning system as described in the 1989 Firebird Service Manual.
4. Air conditioning lines from compressor, accumulator and condenser.
5. Intercooler duct. Refer to TURBOCHARGER (SEC. 6J) of this supplement.
- Drain coolant.
6. Radiator inlet and outlet hoses.
7. Coolant reservoir hose.
8. Coolant fan wiring harness connections and clips.
9. Radiator shroud with coolant fan assemblies attached.
10. Transmission oil lines from radiator.
11. Radiator as described in the 1989 Firebird Service Manual.
12. Power steering pressure hose from pump.
13. Power steering return hose from reservoir.

CAUTION: Depressurize the fuel system as described in the 1989 Firebird Service Manual before servicing fuel system components. Failure to do so could result in a fire and possible personal injury.

14. Fuel lines at the intake manifold and valve cover bracket.
15. Fuel vapor canister hose at engine.
16. Heater hoses at the dash panel.
17. Cables and clips from throttle body.
    - Accelerator cable.
    - Cruise control cable.
    - Throttle valve cable.
18. Engine to body ground strap.
19. Brake booster vacuum line.
20. Vacuum hoses from all non-engine mounted components.
21. Wiring harness connections and clips from the top of the engine.
22. Turbocharger exhaust pipe.
- Raise and suitably support vehicle as described in the 1989 Firebird Service Manual.
23. Electrical connections from the starter.
24. Transmission cooling line clips from engine and intercooler.
25. Crossover pipe. Refer to EXHAUST SYSTEM (SEC. 6F) of this supplement.
26. Torque converter cover.
27. Bolts from torque converter to flywheel.
    - Mark position of flywheel to torque converter for installation reference.
28. Bolts from bottom and sides of bellhousing.
29. Motor mount through bolts.
- Lower vehicle.
30. Wiring harness connections and clips from bottom of engine.
31. Negative (–) battery cable at engine.
32. Bolt from top of bellhousing.
33. Windshield wiper motor as described in the 1989 Firebird Service Manual.
34. Transmission oil filler tube.
- Support transmission.
- Install lifting device to engine assembly.
35. Engine assembly.

Install or Connect

NOTICE: See "Notice" on page 6A5-1 of this section.

- Position engine assembly in the vehicle and align engine mounts to engine brackets.
1. Upper bellhousing bolts loosely.

   Tighten

   - Upper right bellhousing bolt to 47 N·m (35 lb. ft.).
- Remove engine lifting device.
- Route electrical harness to correct positions.
- Raise and suitably support vehicle as described in 1989 Firebird Service Manual.
2. Bellhousing bolts.

   Tighten

   - Bellhousing bolts to 47 N·m (35 lb. ft.).
3. Motor mount through bolts and nuts.

   Tighten

   - Through bolt nuts to 68 N·m (50 lb. ft.).
4. Bolts to flywheel and torque converter.
   - Align marks previously made on torque converter and flywheel for proper connection.

   Tighten

   - Flywheel bolts to 63 N·m (46 lb. ft.).
5. Torque converter cover and bolts.

   Tighten

   - Torque converter cover bolts to 6 N·m (53 lb. in.).
6. Crossover pipe. Refer to EXHAUST SYSTEM (SEC. 6F) of this supplement.
7. Transmission cooling line clips to engine and intercooler.
8. Wiring harness connections and clips to bottom of engine.

9. Electrical connections to starter.
- Lower vehicle.
10. Turbocharger exhaust pipe springs and bolts.

Tighten

- Exhaust pipe bolts to 30 N·m (22 lb. ft.).

11. Wiring harness connections and clips to top of engine.
12. Negative (-) battery cable to engine block.
13. Windshield wiper motor as described in the 1989 Firebird Service Manual.
14. Transmission oil filler tube.
15. Vacuum hoses.
16. Brake booster vacuum line.
17. Engine-to-body ground strap.
18. Cables and clips to throttle body.
    - Accelerator cable.
    - Cruise control cable.
    - Throttle valve cable.
19. Heater hoses to dash panel.
20. Fuel lines at the intake manifold and valve cover bracket.
21. Fuel vapor canister hose at engine.
22. Power steering pressure hose to pump.
23. Power steering return hose to reservoir.
24. Radiator.
25. Transmission oil lines to radiator.
26. Radiator shroud with coolant fan assemblies attached.
27. Coolant fan wiring harness connections and clips.
28. Intercooler shroud. Refer to TURBOCHARGER (SEC. 6J) of this supplement.
29. Coolant reservoir hose.
30. Radiator inlet and outlet hoses.
31. Air conditioning lines to compressor, accumulator and condenser.
32. Air inlet tube to turbocharger.
33. Negative (-) battery cable.
- Charge air conditioning system as described in the 1989 Firebird Service Manual.
- Fill cooling system as described in the 1989 Firebird Service Manual.
34. Hood as described in the 1989 Firebird Service Manual.

INTAKE MANIFOLD

Figures 2 and 3

Remove or Disconnect

1. Negative (-) battery cable.
- Drain engine coolant.
2. Throttle body-to-intercooler intermediate pipe.
3. Radiator inlet hose at intake manifold (2).
4. Coolant by-pass hose.
5. Throttle body water inlet and outlet hoses.
6. Wiring harness connections.
7. EGR valve.
8. EGR valve vacuum control and bracket.
9. PCV breather tube.
10. Brake vacuum booster hose.
11. Vacuum hoses from intake manifold (2).
12. Cables and clips from throttle body.
    - Accelerator cable.
    - Cruise control cable.
    - Throttle valve cable.
13. Heater inlet and outlet pipes.
14. Spark plug wires from ignition module.
15. Ignition module.

CAUTION: Depressurize the fuel system as described in the 1989 Firebird Service Manual before servicing fuel system components. Failure to do so could result in a fire and possible personal injury.

16. Fuel lines at fuel rail and pressure regulator.
17. Intake manifold bolts (5).
18. Intake manifold (2), gaskets (3) and end seals (4).

Clean

- Intake manifold gasket and seal mating surfaces with a suitable solvent. Surfaces must be free of oil and dirt.

Install or Connect

1. Intake manifold gaskets (3).
2. Intake manifold end seals (4).
    - Apply sealer, GM part number 12345336 or equivalent, to the ends of the seals (4).
3. Intake manifold (2).

NOTICE: See "Notice" on page 6A5-1 of this section.

4. Intake manifold bolts (5).

Tighten

- Center bolts (5) (sequence numbers 1 and 2 as shown in Figure 3) until snug.
- All bolts (5) in sequence as shown in Figure 3 to 44 N·m (32 lb. ft.)

5. Fuel lines at fuel rail and pressure regulator.
6. Ignition module.
7. Spark plug wires to ignition module.
8. Heater inlet and outlet pipes.
9. Cables and clips to throttle body.
    - Accelerator cable.
    - Cruise control cable.
    - Throttle valve cable.
10. Vacuum hoses to intake manifold (2).
11. Brake vacuum booster hose.
12. PCV breather tube.
13. EGR valve vacuum control and bracket.
14. EGR valve.
15. Wiring harness connections.
16. Throttle body water inlet and outlet hoses.
17. Coolant by-pass hose.
18. Radiator inlet hose at manifold.
19. Throttle body-to-intercooler intermediate pipe.
20. Negative (-) battery cable.
- Fill cooling system as described in the 1989 Firebird Service Manual.

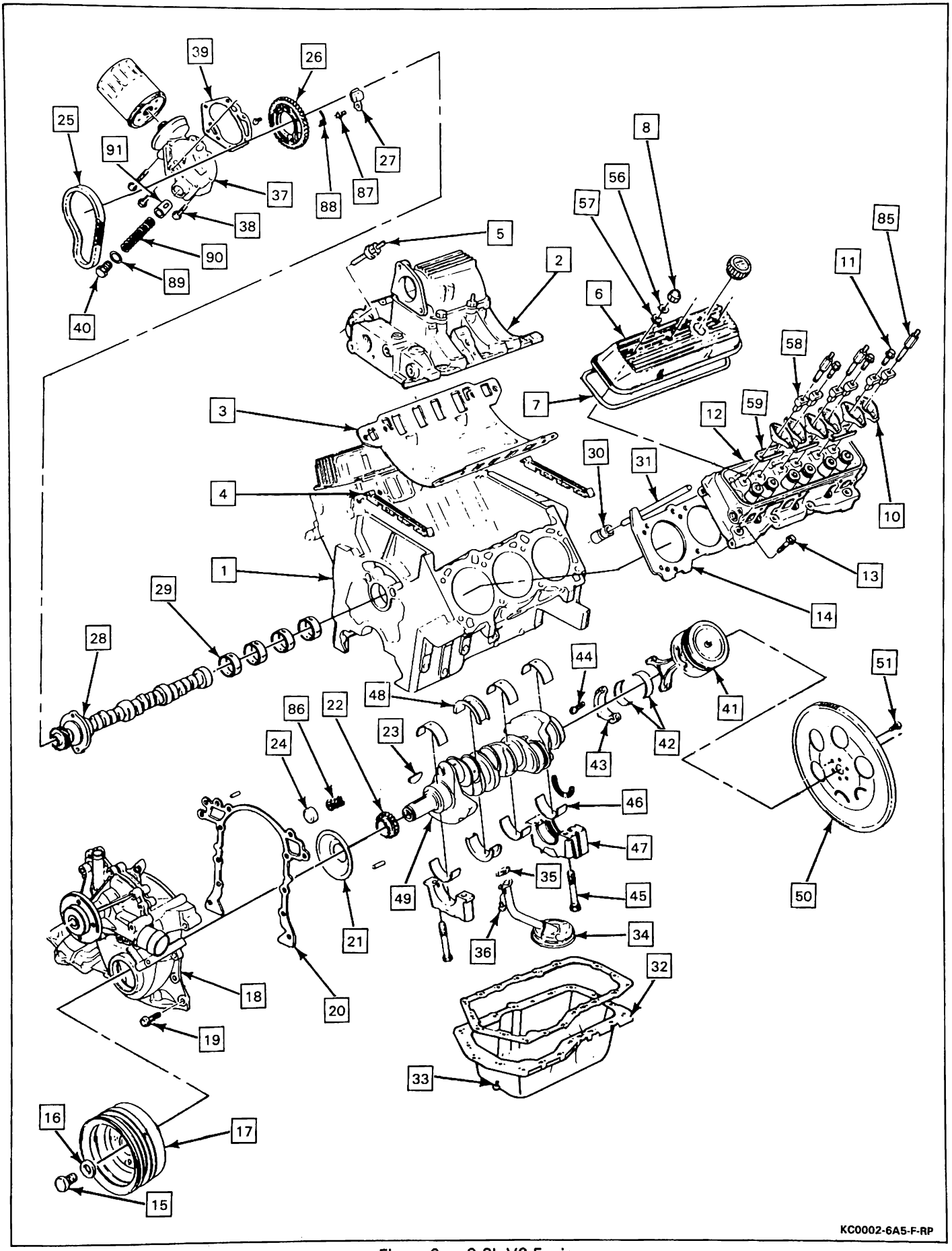

KC0002-6A5-F-RP

Figure 2 — 3.8L V6 Engine

1	CYLINDER BLOCK	20	GASKET	39	OIL PUMP COVER GASKET	85	DOUBLE ENDED BOLT
2	INTAKE MANIFOLD	21	SLINGER	40	PLUG	86	CAMSHAFT SPRING
3	GASKET	22	CRANKSHAFT SPROCKET	41	PISTON AND CONNECTING ROD ASSEMBLY	87	BOLT
4	SEAL	23	KEY	42	ROD BEARING	88	SPRING
5	BOLT	24	CAMSHAFT BUTTON	43	ROD CAP	89	WASHER
6	VALVE ROCKER COVER	25	TIMING CHAIN	44	BOLT	90	SPRING
7	GASKET	26	CAMSHAFT SPROCKET	45	BOLT	91	RELIEF VALVE
8	NUT	27	TIMING CHAIN DAMPER	46	MAIN BEARING		
9	SHAFT	28	CAMSHAFT	47	MAIN BEARING CAP		
10	ROCKER ARM	29	CAMSHAFT BEARING	48	THRUST MAIN BEARING		
11	BOLT	30	LIFTER	49	CRANKSHAFT		
12	CYLINDER HEAD	31	PUSHROD	50	FLYWHEEL		
13	BOLT	32	OIL PAN	51	BOLT		
14	GASKET	33	BOLT	56	WASHER		
15	BOLT	34	OIL PUMP PIPE AND SCREEN	57	SEAL		
16	WASHER	35	GASKET	58	PEDESTAL		
17	BALANCER	36	BOLT	59	PEDESTAL RETAINER		
18	FRONT COVER	37	OIL PUMP COVER				
19	BOLT	38	BOLT				

KC0046-6A5S-F-RP

Figure 2 — 3.8L V6 Engine — Legend

EXHAUST MANIFOLD

Figures 4 through 6

Remove or Disconnect

1. Turbocharger exhaust pipe and nuts at turbocharger.
2. Exhaust manifold nuts (right side) from turbocharger.

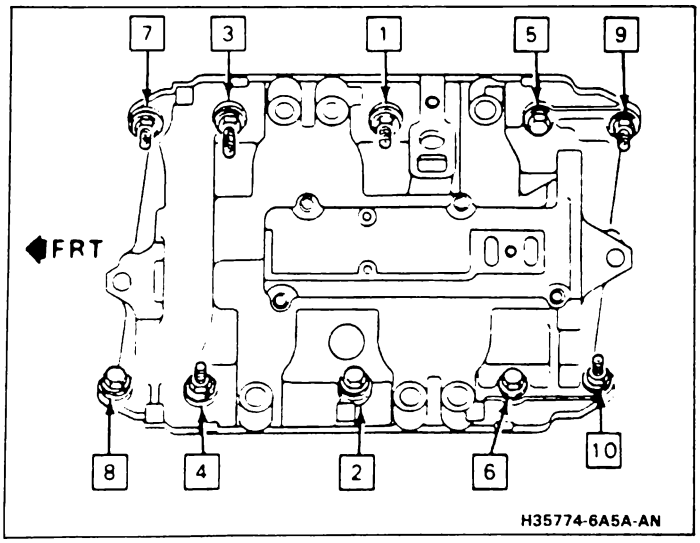

Figure 3 – Intake Manifold Bolt Tightening Sequence

3. Oxygen sensor (79) from manifold (right side).
- Loosen brace nuts at generator and air conditioning compressor (left side).
4. Spark plug wires from spark plugs.
- Raise and suitably support vehicle as described in the 1989 Firebird Service Manual.
5. Turbocharger exhaust pipe and clamp from exhaust flex coupling.
6. Crossover pipe-to-manifold bolts (52) and crossover pipe (53).
7. Oil level indicator and guide tube (left side).
8. Exhaust manifold bolts (55).
- Move generator and air conditioning compressor braces away from exhaust manifold (left side).
9. Exhaust manifolds (54).

Clean

- Manifold and cylinder head mating surfaces.

Install or Connect

NOTICE: See "Notice" on page 6A5-1 of this section.

1. Exhaust manifolds (54) to cylinder heads (12).
2. Exhaust manifold bolts (55).

Tighten

- Bolts (55) to 50 N·m (37 lb. ft.).

3. Generator and air conditioning braces to studs (left side).

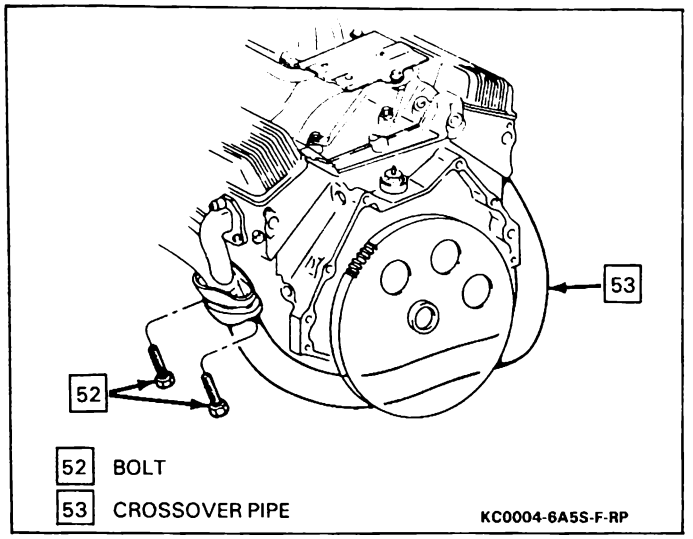

Figure 4 — Crossover Pipe

4. Oil level indicator and guide tube (left side).
5. Crossover pipe (53) and bolts (52) to exhaust manifolds (54).

Tighten

- Bolts (52) to 31 N·m (23 lb. ft.).

6. Turbocharger exhaust pipe and clamp to exhaust flex coupling.

Tighten

- Clamp nuts to 35 N·m (26 lb. ft.).

- Lower vehicle.

7. Spark plug wires.
8. Brace nuts at generator and air conditioning compressor (left side).

Tighten

- Generator brace nut to 50 N·m (37 lb. ft.).
- Air conditioning compressor brace nut to 15 N·m (11 lb. ft.).

9. Oxygen sensor (79) to manifold (right side).
10. Exhaust manifold nuts to turbocharger (right side).

Tighten

- Nuts to 27 N·m (20 lb. ft.).

11. Turbocharger exhaust pipe and nuts to turbocharger.

Tighten

- Nuts to 30 N·m (22 lb. ft.).

VALVE ROCKER COVERS

Figure 7

Left Side

Remove or Disconnect

1. Spark plug wires from spark plugs.

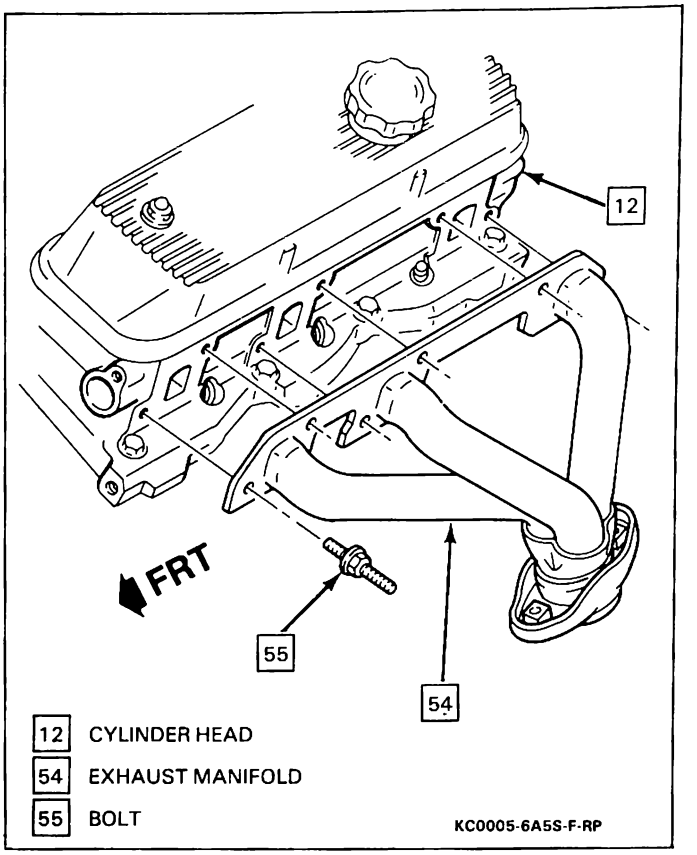

Figure 5 — Left Exhaust Manifold

2. Positive crankcase ventilation (PCV) at valve rocker cover (6).
3. Nuts (8), washers (56) and seals (57).
4. Oil level indicator.
5. Nut from EGR valve vacuum control bracket.
   - Move vacuum control out of the way.
6. Bolt holding wiring harness to intake manifold.
7. Nuts from wiring harness at valve rocker cover (6).
8. Wiring harness from clips.

CAUTION: Depressurize the fuel system as described in the 1989 Firebird Service Manual before servicing fuel system components. Failure to do so could result in a fire and possible personal injury.

9. Fuel lines at fuel rail.
   - Cap lines.
   - Move lines out of the way.
10. Valve rocker cover (6) with gasket (7).
11. Gasket (7) from valve rocker cover (6).

Clean

- Valve rocker cover (6) and cylinder head sealing surfaces.

Install or Connect

1. Gasket (7) to valve rocker cover (6).
2. Valve rocker cover (6) with gasket (7).
3. Fuel lines at fuel rail.
4. Wiring harness to clips.

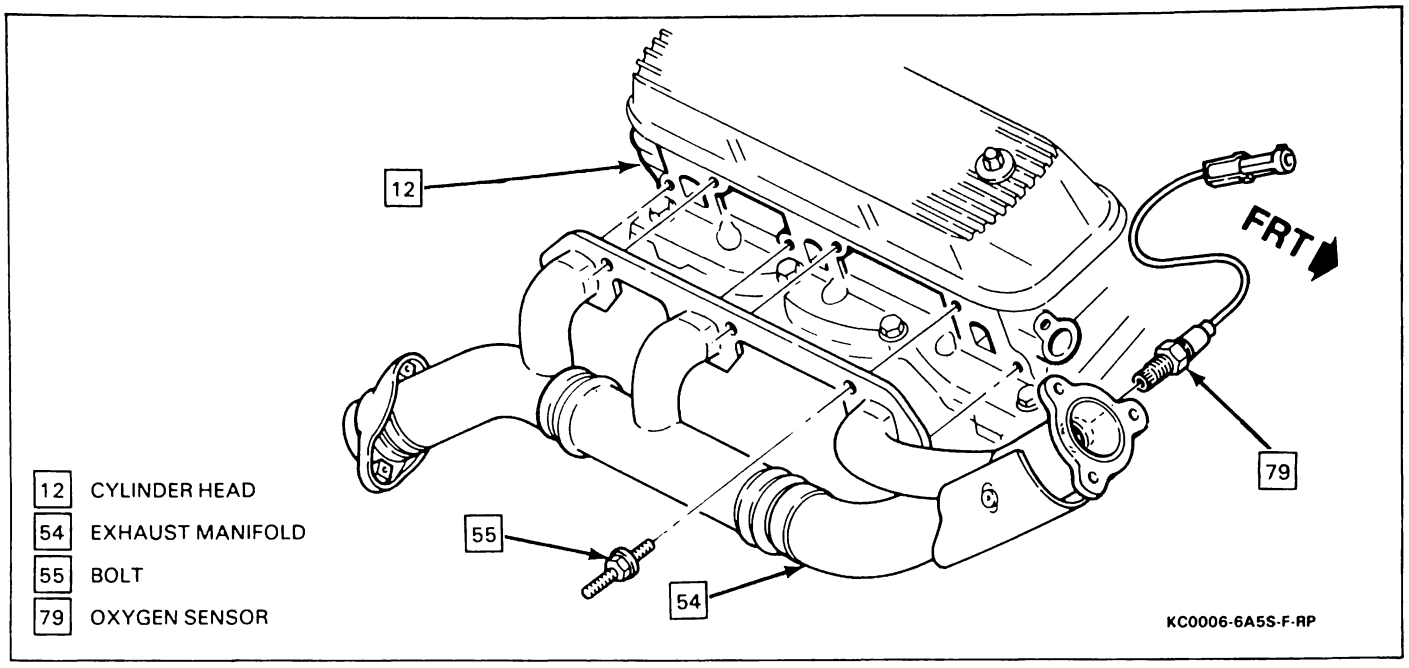

Figure 6 — Right Exhaust Manifold

5. Nuts to wiring harness at valve rocker cover (6).
6. Bolt holding wiring harness to intake manifold.
7. Nut to EGR valve vacuum control bracket.
8. Oil level indicator.

NOTICE: See "Notice" on page 6A5-1 of this section.

9. Seals (57), washers (56) and nuts (8).

Tighten

- Nuts (8) to 18 N·m (13 lb. ft.).

10. PCV connection at valve rocker cover (6).

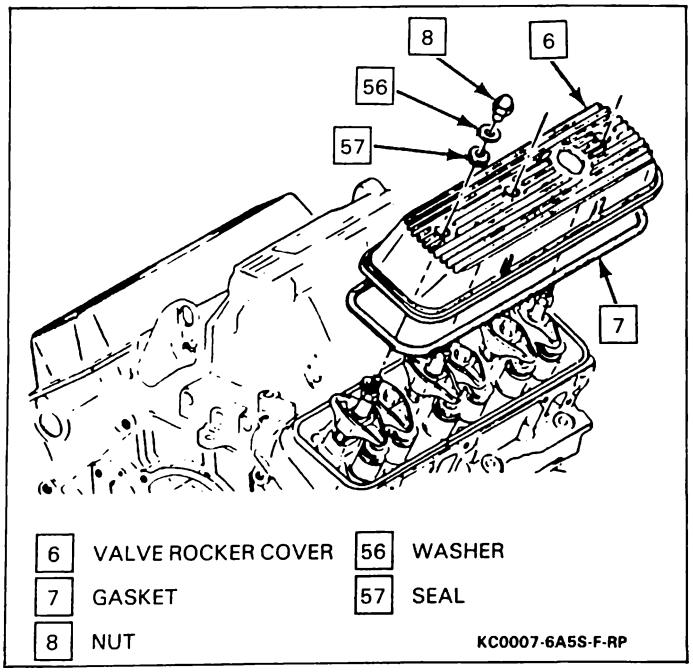

Figure 7 — Valve Rocker Cover and Gasket

11. Spark plug wires at spark plugs.

Right Side

Remove or Disconnect

1. Spark plug wires from spark plugs.
2. Spark plug wire bracket from valve rocker cover (6).
3. Nuts (8), washers (56) and seals (57).
4. Valve rocker cover (6) with gasket (7).
5. Gasket (7) from valve rocker cover (6).

Clean

- Valve rocker cover (6) and cylinder head sealing surfaces.

Install or Connect

1. Gasket (7) to valve rocker cover (6).
2. Valve rocker cover (6) with gasket (7).

NOTICE: See "Notice" on page 6A5-1 of this section.

3. Seals (57), washers (56) and nuts (8).

Tighten

- Nuts (8) to 18 N·m (13 lb. ft.).

4. Spark plug wire bracket to valve rocker cover (6).
5. Spark plug wires to spark plugs.

ROCKER ARM ASSEMBLIES AND PUSHRODS

Figure 8

Remove or Disconnect

1. Valve rocker cover. Refer to "Valve Rocker Covers" in this section.

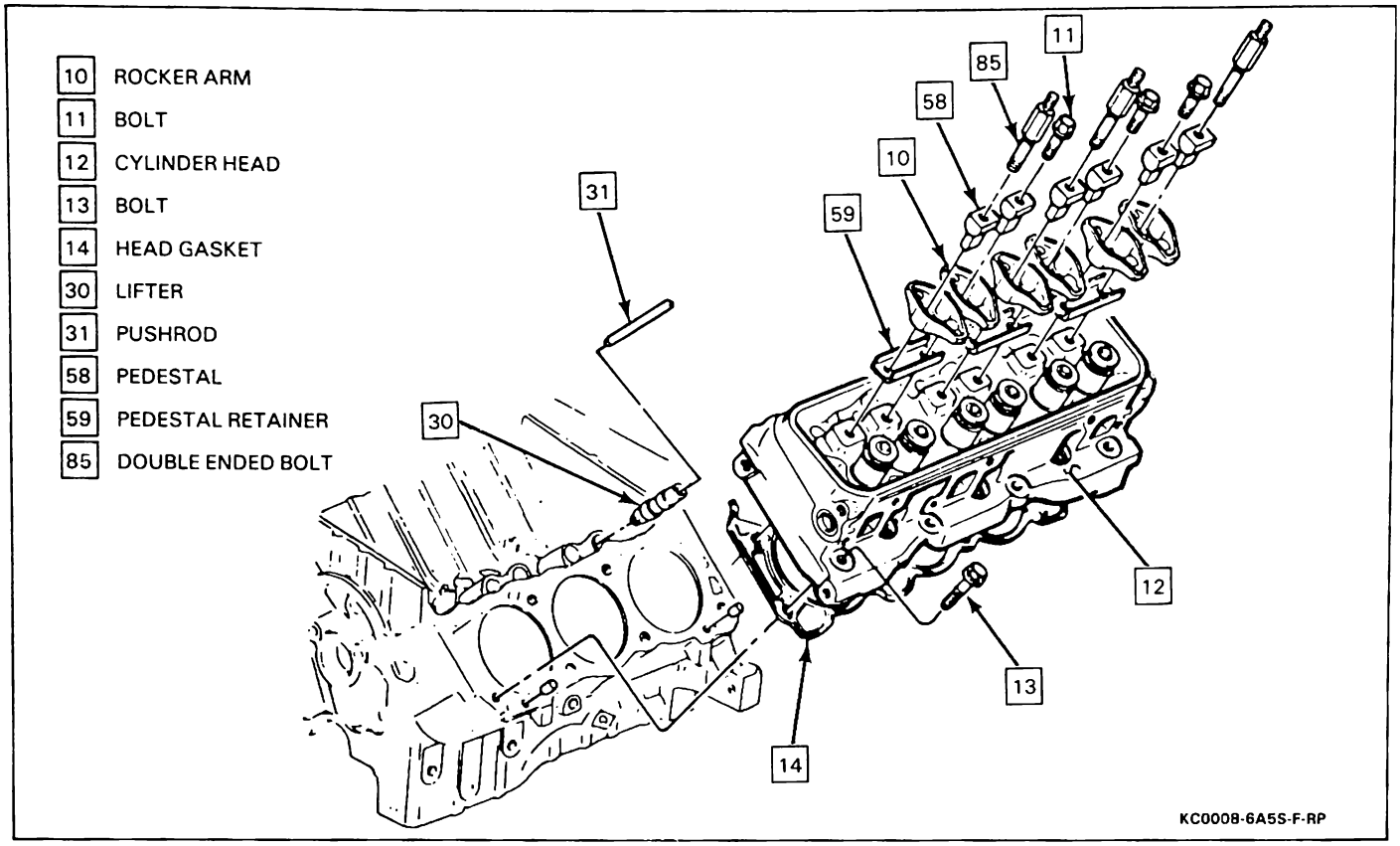

Figure 8 — Valve Train and Cylinder Head

Important

- Mark or place components in order so they can be installed in the same location from which they were removed.

2. Rocker arm pedestal bolts (11) and double ended bolts (85).
   - Note position of double ended bolts (85) for reassembly.
3. Rocker arm pedestals (58), rocker arms (10) and pedestal retainers (59).
4. Pushrods (31).

Install or Connect

1. Pushrods (31).
   - Be sure pushrods (31) seat in lifter (30).
2. Pedestal retainers (59), rocker arms (10) and rocker arm pedestals (58).

NOTICE: See "Notice" on page 6A5-1 of this section.

3. Rocker arm pedestal bolts (11).

Tighten

- Bolts (11) to 60 N·m (44 lb. ft.).

4. Valve rocker cover. Refer to "Valve Rocker Covers" in this section.

VALVE LIFTERS

Figure 8

Oil is supplied to the lifter through a hole in the side of the lifter body which indexes with a groove and hole in the lifter plunger. Oil is then metered past the oil metering valve in the lifter, through the pushrods to the rocker arms.

When the lifter begins to move up the cam lobe, the ball check is held against its seat in the plunger by the ball check spring which traps the oil in the base of the lifter body below the plunger. The plunger and lifter body then raise as a unit, pushing up the pushrod to open the valve. The force of the valve spring which is exerted on the plunger through the rocker arm and pushrod causes a slight amount of leakage between the plunger and lifter body. This **leak-down** allows a slow escape of trapped oil in the base of the lifter body. As the lifter moves down the other side of the cam lobe and reaches the base circle or valve closed position, the plunger spring quickly moves the plunger back (up) to its original position. This movement causes the ball check to open against the ball spring and oil from within the plunger is drawn into the base of the lifter. This restores the lifter to zero lash.

Valve Lifter Diagnosis

1. Momentarily Noisy When Car Is Started:
   This condition is normal. Oil drains from the lifters which are holding the valves open when the engine is not running. It will take a few seconds for the lifter to fill after the engine is started.
2. Intermittently Noisy On Idle Only Disappearing When Engine Speed Is Increased:
   Intermittent clicking may be an indication of a pitted check valve ball, or it may be caused by dirt. Correction: Clean the lifter and inspect. If check

valve ball is damaged, replace lifter.

3. Noisy At Slow Idle Or With Hot Oil, Quiet With Cold Oil Or As Engine Speed Is Increased:
   High leak-down rate.
   - Replace suspect lifter.
4. Noisy At High Car Speeds And Quiet At Low Speeds:
   - High oil level — Oil level above the "FULL" mark allows crankshaft counterweights to churn the oil into foam. When foam is pumped into the lifters, they will become noisy since a solid column of oil is required for proper operation.
     Correction: Drain oil until proper level is obtained.
   - Low oil level — Oil level below the ADD mark allows the pump to pump air at high speeds which results in noisy lifters.
     Correction: Fill until proper oil level is obtained.
   - Oil pan bent on bottom or pump screen cocked or loose, replace or repair as necessary.
5. Noisy At Idle Becoming Louder As Engine Speed Is Increased To 1500 RPM:
   This noise is not connected with lifter malfunction. It becomes most noticeable in the car at 10 to 15 mph "LOW" range, or 30 to 35 mph "DRIVE" range and is best described as a hashy sound. At slow idle, it may be entirely gone or appear as a light ticking noise in one or more valves. It is caused by one or more of the following:
   - Badly worn or scuffed valve tip and rocker arm pad.
   - Excessive valve stem to guide clearance.
   - Excessive valve seat runout.
   - Off square valve spring.
   - Excessive valve face runout.
     To check valve spring and guide clearance, remove the valve covers.
   - Occasionally this noise can be eliminated by rotating the valve spring and valve. Crank engine until noisy valve is off its seat. Rotate spring. This will also rotate valve. Repeat until valve becomes quiet. If correction is obtained, check for an off square valve spring. If spring is off square more than 1/16 inch in free position, replace spring.
   - Check for excessive valve stem to guide clearance. If necessary, correct as required.
6. Valves Noisy Regardless Of Engine Speed:
   This condition can be caused by foreign particles or excessive valve lash.
   Check for valve lash by turning engine so the piston in that cylinder is on top dead center of firing stroke. If valve lash is present, the pushrod can be freely moved up and down a certain amount with rocker arm held against valve. Valve lash indicates one of the following:
   - Worn pushrod.
   - Worn rocker arm.
   - Lifter plunger stuck in down position due to dirt or carbon.
   - Faulty lifter.

Inspect

- Checking for the above four items:
  1. Look at the upper end of pushrod. Excessive wear of the spherical surface indicates one of the following conditions.
     - Improper hardness of the pushrod ball. The pushrod and rocker arm must be replaced.
     - Improper lubrication of the pushrod. The pushrod and rocker arm must be replaced. The oiling system to the pushrod should be checked.
  2. If pushrod appears in good condition and has been properly lubricated, replace rocker arm and recheck valve lash.
  3. If valve lash exists and pushrod and rocker arm are in good condition, trouble is in the lifter. Lifter should be replaced.

Valve Lifter Replacement

Important

- If the camshaft was replaced, the lifters must also be replaced.

Tool Required:
J 3049 Hydraulic Valve Lifter Remover

Remove or Disconnect

- Drain coolant.
1. Valve rocker covers. Refer to "Valve Rocker Covers" in this section.
2. Intake manifold. Refer to "Intake Manifold" in this section.
3. Rocker arms and pushrods. Refer to "Rocker Arm Assemblies and Pushrods" in this section.
4. Valve lifters (30) using J 3049.
   - Mark or place valve lifters (30) in order so they can be installed in the same location from which they were removed.

Inspect

- Valve lifters. Refer to "Valve Lifter Leak-Down Rate Test" in this section.

Install or Connect

1. Valve lifters (30).
2. Rocker arms and pushrods. Refer to "Rocker Arm Assemblies and Pushrods" in this section.
3. Intake manifold. Refer to "Intake Manifold" in this section.
4. Valve rocker covers. Refer to "Valve Rocker Covers" in this section.

- Fill cooling system as described in the 1989 Firebird Service Manual.

Valve Lifter Leak-Down Rate Test

Figure 9

Tool Required:
J 5790-B Hydraulic Valve Lifter Tester

With J 5790-B test the valve lifter leak-down rate:

1. Fill tester cup to approximately one inch from top

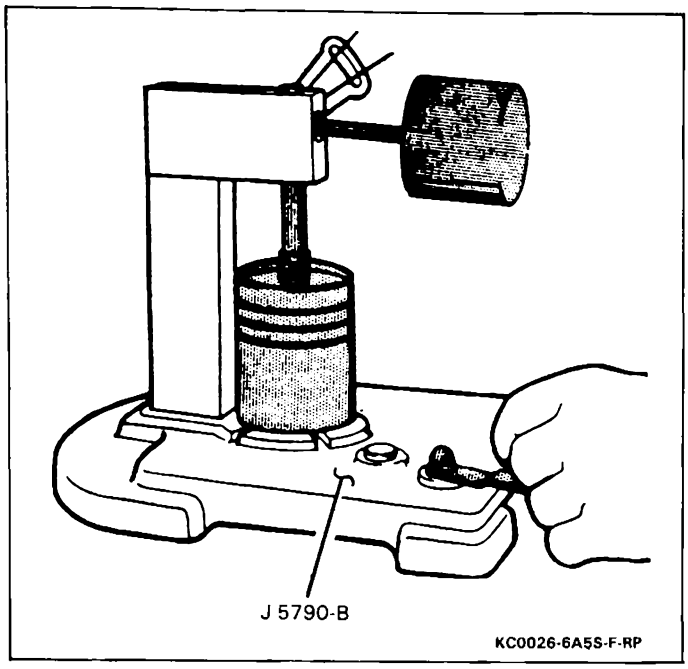

Figure 9 — Measuring Valve Lifter Leak-Down Rate

with the special fluid which is available from tester manufacturer.

2. Swing weight arm out of the way, raise ram, and position lifter into boss in center of tester cup.
3. Adjust ram (with weight arm clear of ram) so that the point is positioned on the set line (marked "S"). Tighten jam nut to maintain setting.
4. Operate lifter through full travel of plunger by pumping weight arm to fill lifter with test fluid and force out air.

Important

- Lifter must be completely submerged at all times.
- Continue pumping for several strokes after definite resistance is felt.

5. Raise weight arm to allow plunger spring to expand fully; lower arm onto ram and begin turning crank slowly (1 revolution every 2 seconds).
6. Time indicator travel from lower line (first line above set line) to line marked 0.094 or 3/32 inch while rotating cup with crank. Lifter is satisfactory if rate is between 12 and 90 seconds.

CYLINDER HEAD

Figures 8 and 10 through 12

Important

- Before removing the cylinder head(s) from the engine and before disassembling the valve mechanism, perform a compression test and record the results.

Remove or Disconnect

1. Negative (-) battery cable.
2. Serpentine belt. Refer to COOLING AND RADIATOR (SEC. 6B) of this supplement.

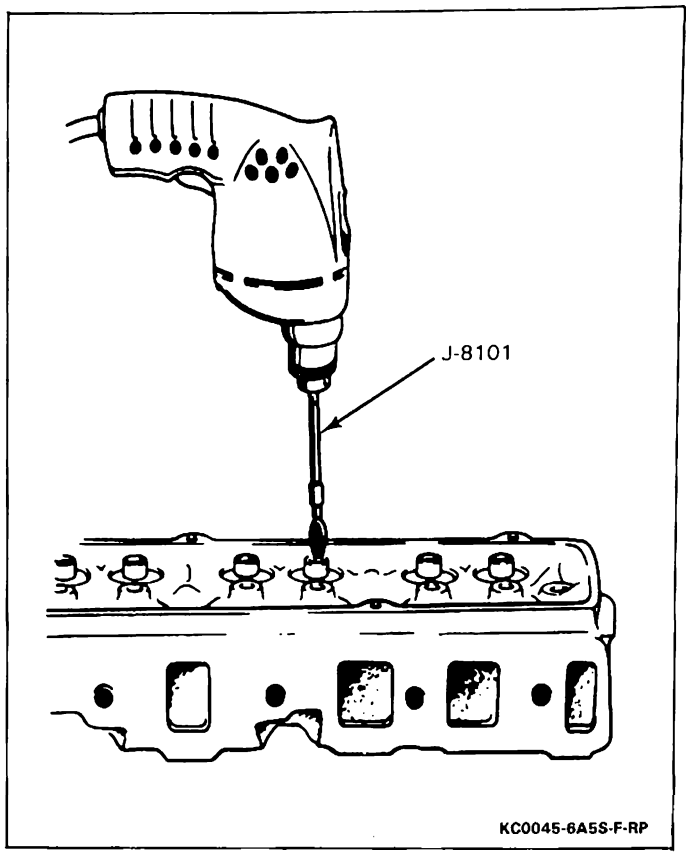

Figure 10 — Cleaning Valve Guide

3. From left cylinder head:
   - Generator with wiring attached and lay aside.
   - Air conditioning compressor with hoses attached and lay aside.
   - Bracket with power steering pump and lay aside.
4. From right cylinder head:
   - Turbocharger. Refer to TURBOCHARGER (SEC. 6J) of this supplement.
5. Valve rocker covers. Refer to "Valve Rocker Covers" in this section.
6. Rocker arms and pushrods. Refer to "Rocker Arm Assemblies and Pushrods" in this section.
7. Intake manifold.
   Refer to "Intake Manifold" in this section.
8. Exhaust manifolds. Refer to "Exhaust Manifold" in this section.
9. Cylinder head bolts (13).
10. Cylinder heads (12) and head gaskets (14).

Clean

- Cylinder head and block gasket mating surfaces.
- Threads in cylinder block by using an appropriate tap.

Disassemble

Tool Required:
J 8101 Valve Guide Cleaner

Important

- During disassembly, be sure that the valve

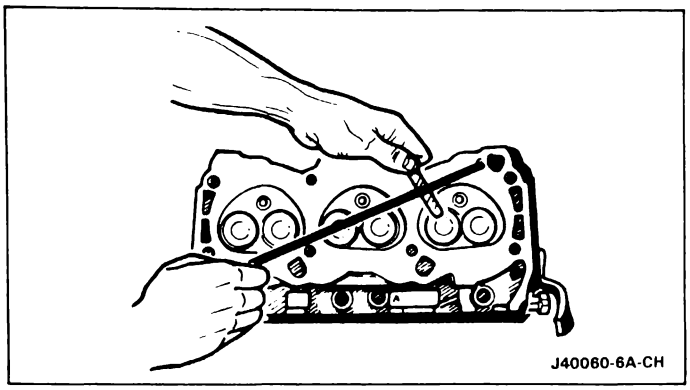

Figure 11 — Checking Cylinder Head Flatness

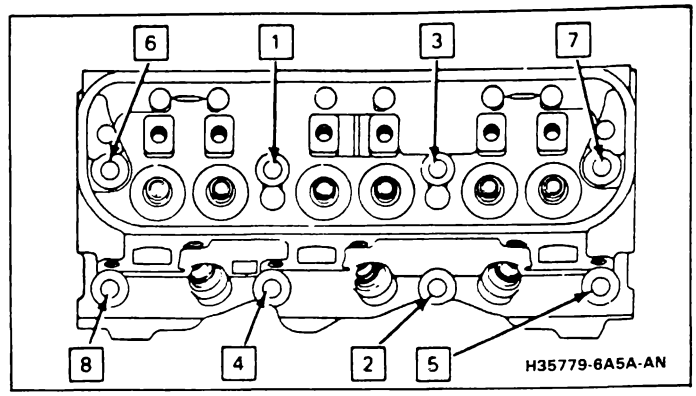

Figure 12 — Cylinder Head Bolt Tightening Sequence

train components are kept together and identified so that they can be re-installed in their original locations and with the same mating surfaces as when removed.

1. Valve assemblies. Refer to "Valve, Spring and Retainer" in this section.
2. Oil gallery and water jacket plugs.
   - Threaded plugs.
   - Cup plugs, if damaged or leaking.
     - Obtain a suitable self-threading screw.
     - Drill a hole in the plug.
     - Install the self-threading screw.
     - Pry out plug.
3. Spark plugs.

Inspect

- Cylinder head gasket (14) and mating surfaces for leaks, corrosion and blow-by. If the gasket has failed, determine the cause:
  - Improper installation.
  - Loose or warped cylinder head.
  - Missing dowel pins.
  - Excessive boost pressure.

Clean

CAUTION: Safety glasses must be worn when using a power wire brush to avoid injury to the eyes.

- Cylinder head bolts (13).
- Cylinder head (12). Remove all varnish, soot and carbon to the bare metal. Do not use a motorized wire brush on any gasket sealing surface.
- Valve guides using J 8101.
- Threaded holes.
- Remains of sealer from plug holes.

Inspect

1. Cylinder head bolts for damaged threads or stretching and damaged heads caused by improper use of tools.

   Important

   - Any bolts that are suspected of damage must be replaced.
2. Cylinder head for cracks, especially between valve seats, and in the exhaust ports.
3. Cylinder head deck for corrosion, sand inclusions and blow holes.
   - Do not attempt to weld the cylinder head, replace it.
4. Cylinder head deck, intake and exhaust manifold mating surfaces for flatness. These surfaces may be re-conditioned by parallel grinding. If more than 0.25 mm (0.010 inch) must be removed, replace the head.
5. All threaded holes for damage. Threads may be re-conditioned with thread inserts. Refer to "Thread Repair" in this section.
6. Seating surfaces.
   - Water jacket plugs.
7. Valve guides for wear.
   - Since the valve guide serves to support and center the valve grinder, it is essential that the valve guide is serviced before reconditioning the valve seats. The valve guide must be cleaned properly before any measuring or servicing takes place. If the valve guide requires reaming, this must be done first. Refer to "Valve, Spring, and Retainer" in this section.
8. Valve seats for excessive wear and burned spots.
   - Valve seats may be re-conditioned by grinding. An oscillating type valve seat grinder is preferred. Follow the grinder manufacturer's instructions. If, after grinding, the new seat is too wide, it may be narrowed by using a 20 degree or 70 degree stone. The 20 degree stone will lower the seat and the 70 degree stone will raise the seat. If the seats are re-conditioned, the valves also must be re-conditioned or replaced. Refer to "Valve, Spring and Retainer" in this section.

Assemble

1. Oil gallery and cooling jacket plugs. Coat plugs with GM 1050026 sealer or equivalent.
2. Valve assemblies. Refer to "Valve, Spring and Retainer" in this section.
3. Spark plugs.

Tighten

- Spark plugs to 27 N·m (20 lb. ft.).

Install or Connect

1. Cylinder head gaskets (14) on cylinder block.
2. Cylinder heads (12).

NOTICE: See "Notice" on page 6A5-1 of this section.

- Apply thread sealer, GM part number 1052080 or equivalent on cylinder head bolt threads.

3. Cylinder head bolts (13).

NOTICE: This engine uses special torque to yield head bolts. This design bolt requires a special tightening procedure. Failure to follow the given procedure will cause head gasket failure and possible engine damage.

Tighten

- Bolts to 47 N·m (35 lb. ft.) in the sequence as shown in Figure 12.

Important

- If torque reaches 88 N·m (65 lb. ft.) at any time in steps 4 and 5, stop at this point. Do not complete the balance of the 90 degree turn.

4. Tighten each bolt 1/4 turn (90 degrees) in sequence.
5. Tighten each bolt an additional 1/4 turn (90 degrees) in sequence.
6. Exhaust manifolds. Refer to "Exhaust Manifold" in this section.
7. Intake manifold. Refer to "Intake Manifold" in this section.
8. Rocker arms and pushrods. Refer to "Rocker Arm Assemblies and Pushrods" in this section.
9. Valve rocker covers. Refer to "Valve Rocker Covers" in this section.
10. On right cylinder head:
    - Turbocharger. Refer to TURBOCHARGER (SEC. 6J) of this supplement.
11. On left cylinder head:
    - Bracket with power steering pump.
    - Air conditioning compressor.
    - Generator.
12. Serpentine belt. Refer to COOLING AND RADIATOR (SEC. 6B) of this supplement.
13. Negative (-) battery cable.

VALVE SPRING AND STEM SEAL

(Cylinder Head on Engine)

Tools Required:
J 26513-A Valve Spring Compressor
J 22794 Spark Plug Port Adapter

Remove or Disconnect

1. Valve rocker cover. Refer to "Valve Rocker Covers" in this section.
2. Rocker arms and pushrods. Refer to "Rocker Arm Assemblies and Pushrods" in this section.
3. Spark plugs.
   - Install J 22794 in spark plug port and charge cylinder with air.
   - Install J 26513-A and compress valve spring.
4. Valve keys.
5. J 26513-A.
6. Retainer.
7. Valve spring.
8. Valve stem seal.

Install or Connect

1. Valve stem seal.
   - Lubricate seal with engine oil before installation.
   - The color of the replacement seals may not be the same as the original. Install seals in their correct location based on the part number and package description.
   - Be sure each seal is fully seated.
2. Valve spring.
3. Retainer.
   - Install J 26513-A and compress valve spring.
4. Valve keys.
   - Remove J 26513-A.
   - Remove J 22794.
5. Spark plugs.

Tighten

- Spark plugs to 27 N·m (20 lb. ft.).

6. Rocker arms and pushrods. Refer to "Rocker Arm Assemblies and Pushrods" in this section.
7. Valve rocker cover. Refer to "Valve Rocker Covers" in this section.

VALVE, SPRING AND RETAINER

Figures 13 through 18

Tools Required:
J 26513-A Valve Spring Compressor
J 8101 Valve Guide Cleaner
J 5830-02 Valve Guide Reamer Set (Includes J 5830-4, 0.254 mm (0.010 inch) oversize)

Remove or Disconnect

- Cylinder head. Refer to "Cylinder Head" in this section.

Disassemble

Important

- Be sure that the valve train components are kept together and identified so that they can be re-installed in their original location and with the same mating surfaces as when removed.

- Install J 26513-A and compress valve spring.

1. Valve keys.
2. J 26513-A.
3. Retainer.
4. Valve spring.
5. Valve stem seal.

NOTICE: Avoid breaking the valve guide. If the

valve stem has mushroomed due to rocker arm wear, remove burrs by chamfering the valve stem with an oil stone or file. Do not remove the valve from the guide using a hammer and drift punch.

6. Valve.

Clean

1. Valves of carbon, oil and varnish. Carbon can be removed with a wire brush. Varnish can be removed by soaking in carburetor cleaning fluid.

CAUTION: Safety glasses must be worn when using a power wire brush. Avoid inhaling fumes and exposing skin to carburetor cleaning fluid, as bodily injury may result.

- Do not scratch the valve stem with the wire brush.

2. Valve guides using J 8101.

Inspect

- Valve stem tip for wear. The valve stem tip may be reconditioned by grinding.
- Follow the grinder manufacturer's instructions. Make sure the new surface is perpendicular to the valve stem.
- Valve lock (keeper) and oil seal grooves for chipped or worn lands. Replace the valve if chipped or worn.
- Valve face for burning or cracking. If pieces are broken off, inspect the corresponding piston and cylinder head area for damage.
- Valve stem for burrs and scratches. Burrs and minor scratches may be removed with an oil stone.
- Valve stem for straightness and valve head for bending or distortion. Use "V" blocks. Bent or distorted valves must be replaced.
- Valve face for grooving. If the groove is so deep that re-facing would result in a knife edge (destroying the margin), the valve must be replaced.
- The valve face may be re-ground to specifications if it is otherwise in good condition. If the valve face cannot be ground within the limits given, it must be replaced.
- Measure valve margin after grinding valves. If the margin is less than the minimum recommended margin, replace the valve.

NOTICE: New valves must not be lapped. Lapping destroys the protective coating on the valve face.

Measure

There are two acceptable ways of measuring valve to guide clearance. Method 2 is preferred.

1. Insert the valve into its guide. Lift it 2 mm (1/8 inch) off the seat and move it side to side, measuring the amount of movement with a dial indicator, or
2. With a hole gage, measure the valve guide I.D.

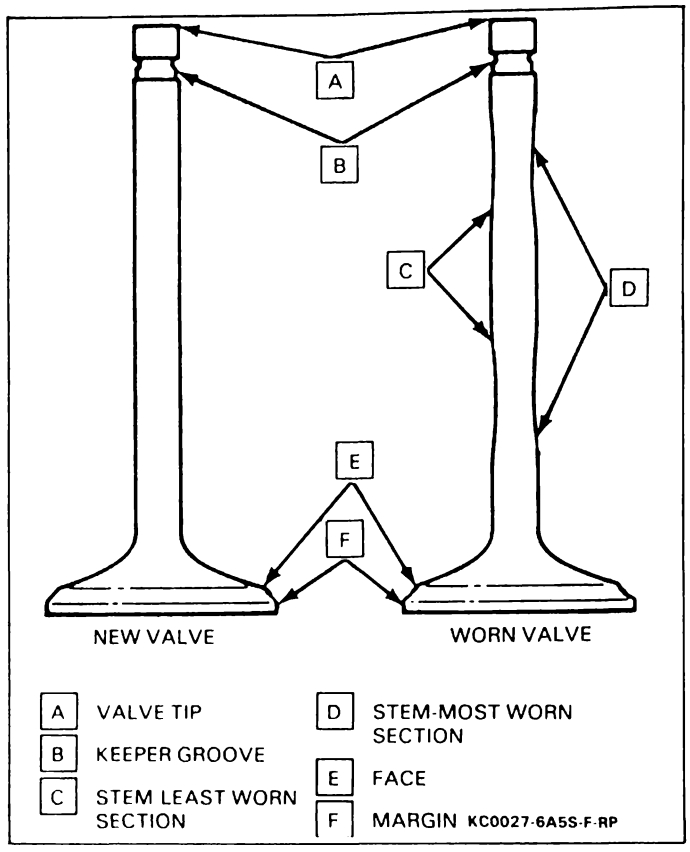

Figure 13 — Valve Wear

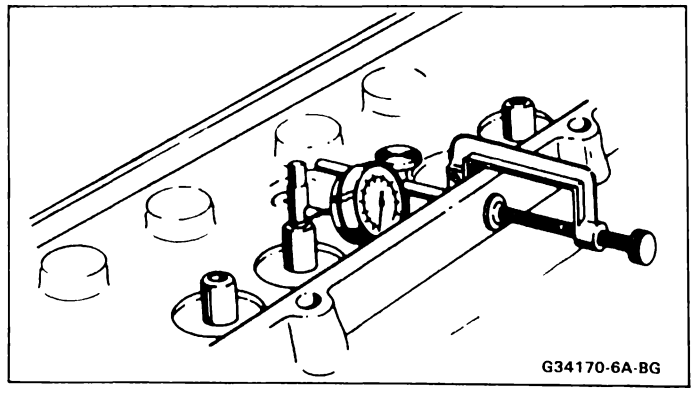

Figure 14 — Measuring Valve Guide Clearance

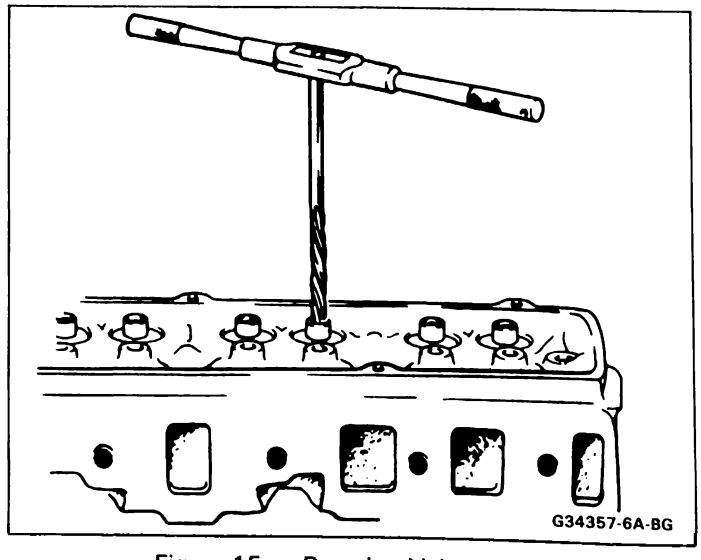

Figure 15 — Reaming Valve Guide

and measure the valve stem with a micrometer and compare the clearance.

- The valve guides may be reamed 0.254 mm (0.10 inch) larger to accept an oversized valve using J 5830-4.

NOTICE: Avoid breaking reamer flutes or jamming the reamer into the valve guide due to packing of chips or carbon. Clean the valve guides before reaming. Do not push down on the reamer.

Inspect

- Valve springs.
  - Expanded height.
  - Spring ends. If they are not parallel, the spring is bent and must be replaced.
  - Spring load. If below specification, replace.
- Valve spring seating surface of the spring retainers for wear or gouging. Replace as required.

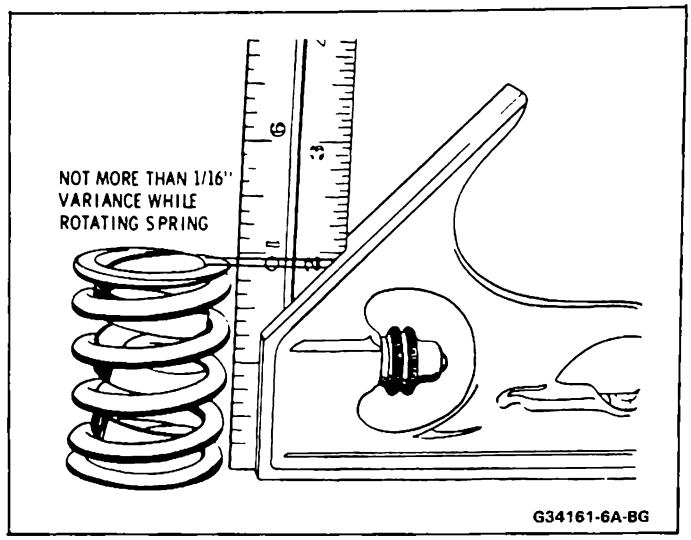

Figure 16 — Checking Valve Springs

Assemble

1. Valve.

Measure

- Valve run-out. Lift the valve off its seat and apply a dab of prussian blue on the valve face. Seat the valve and carefully rotate it. The prussian blue traces transferred to the valve seat are an indication of concentricity of the valve seat.

  Clean all traces of prussian blue. Apply a dab of prussian blue on the valve seat and repeat the check. The traces of prussian blue transferred to the valve face indicates valve run-out. Re-condition valve seat/face or replace valves as required.
- Valve stem height.
  - Place the valve in its guide and hold it in the closed position.
  - With a steel machinist's rule, measure from the machined spring seat to the valve tip.
  - The measurement should be 50.29 mm ± 0.51 (1.98 in. ± 0.020).

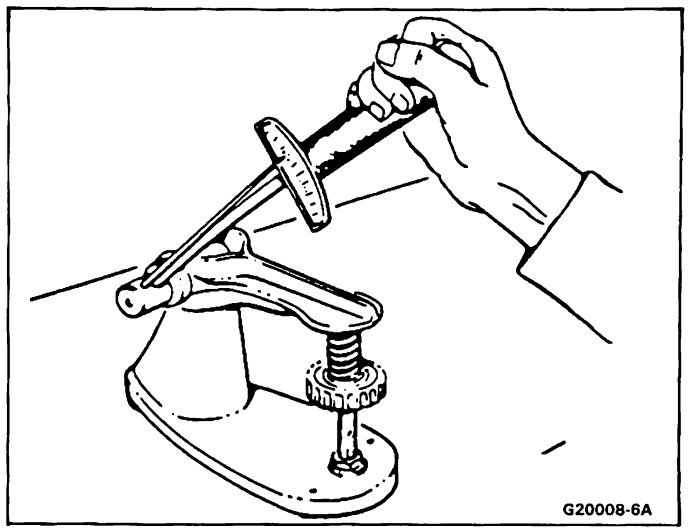

Figure 17 — Checking Valve Spring Load

2. Valve stem seal.
3. Valve spring.
4. Retainer.

- Install J 26513-A and compress valve spring.

5. Valve keys.

- Remove J 26513-A. Pull up on retainer to seat it.

Measure

- Valve spring installed height. Excessive valve spring installed height is caused by the lowering of the valve seat by wear and grinding and valve face grinding during re-conditioning. To correct the valve spring installed height, add shims under the valve spring.
- With a steel machinist's rule or other suitable measuring device, measure the distance from the machined spring seat to the spring-side of the retainer.

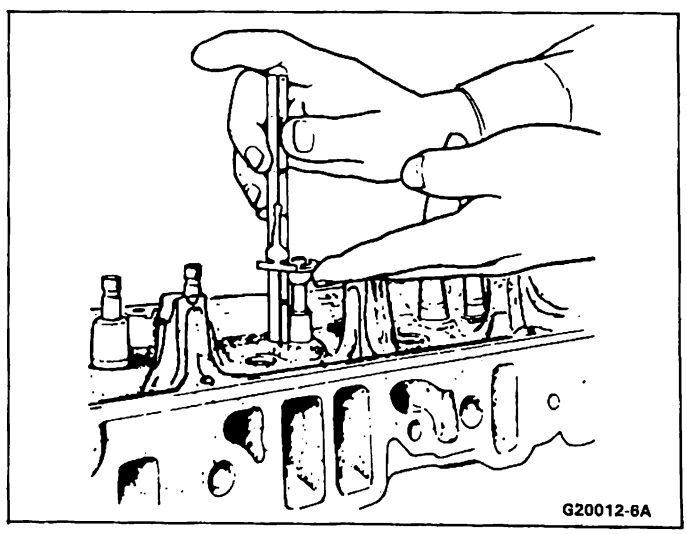

Figure 18 — Measuring Valve Spring Installed Height

- The measurement should be 43.86 mm ± 0.76 (1.72 in. ± 0.030). If not within specifications, add shims under the valve spring as required.

Install or Connect

- Cylinder head. Refer to "Cylinder Head" in this section.

CRANKSHAFT BALANCER

Figure 19

Remove or Disconnect

1. Serpentine belt. Refer to COOLING AND RADIATOR (SEC. 6B) of this supplement.
2. Intercooler and duct. Refer to TURBOCHARGER (SEC. 6J) of this supplement.
3. Intercooler fan bolts (63) and intercooler fan (68).
4. Pulley hub bolts (66) and pulley (65) and hub (67) as an assembly..
5. Crankshaft balancer bolt (15) and washer (16).
6. Crankshaft balancer (17).

Install or Connect

NOTICE: See "Notice" on page 6A5-1 of this section.

1. Crankshaft balancer (17).
2. Crankshaft balancer washer (16) and bolt (15).

Tighten

- Bolt (15) to 297 N·m (219 lb. ft.).

3. Pulley (65) and hub (67) as an assembly.
4. Bolts (66).

Tighten

- Bolts (66) to 35 N·m (26 lb. ft.).

5. Intercooler fan (68) and bolts (63).

Tighten

- Bolts (63) to 29 N·m (21 lb. ft.).

6. Intercooler and duct. Refer to TURBOCHARGER (SEC. 6J) of this supplement.
7. Serpentine belt. Refer to COOLING AND RADIATOR (SEC. 6B) of this supplement.

FRONT COVER

Figure 20

Remove or Disconnect

1. Oil cooler and adapter. Refer to "Oil Cooler and Adapter" in this section.
2. Coolant pump. Refer to COOLING AND RADIATOR (SEC. 6B) of this supplement.
3. Radiator inlet hose from intake manifold.
4. Front clamp on coolant bypass hose.
5. Crankshaft balancer. Refer to "Crankshaft Balancer" in this section.
6. Sensor electrical connections.
7. Oil pan-to-front cover bolts.
8. Bolts (19) attaching front cover (18) to cylinder block.
9. Crankshaft speed sensor. Refer to

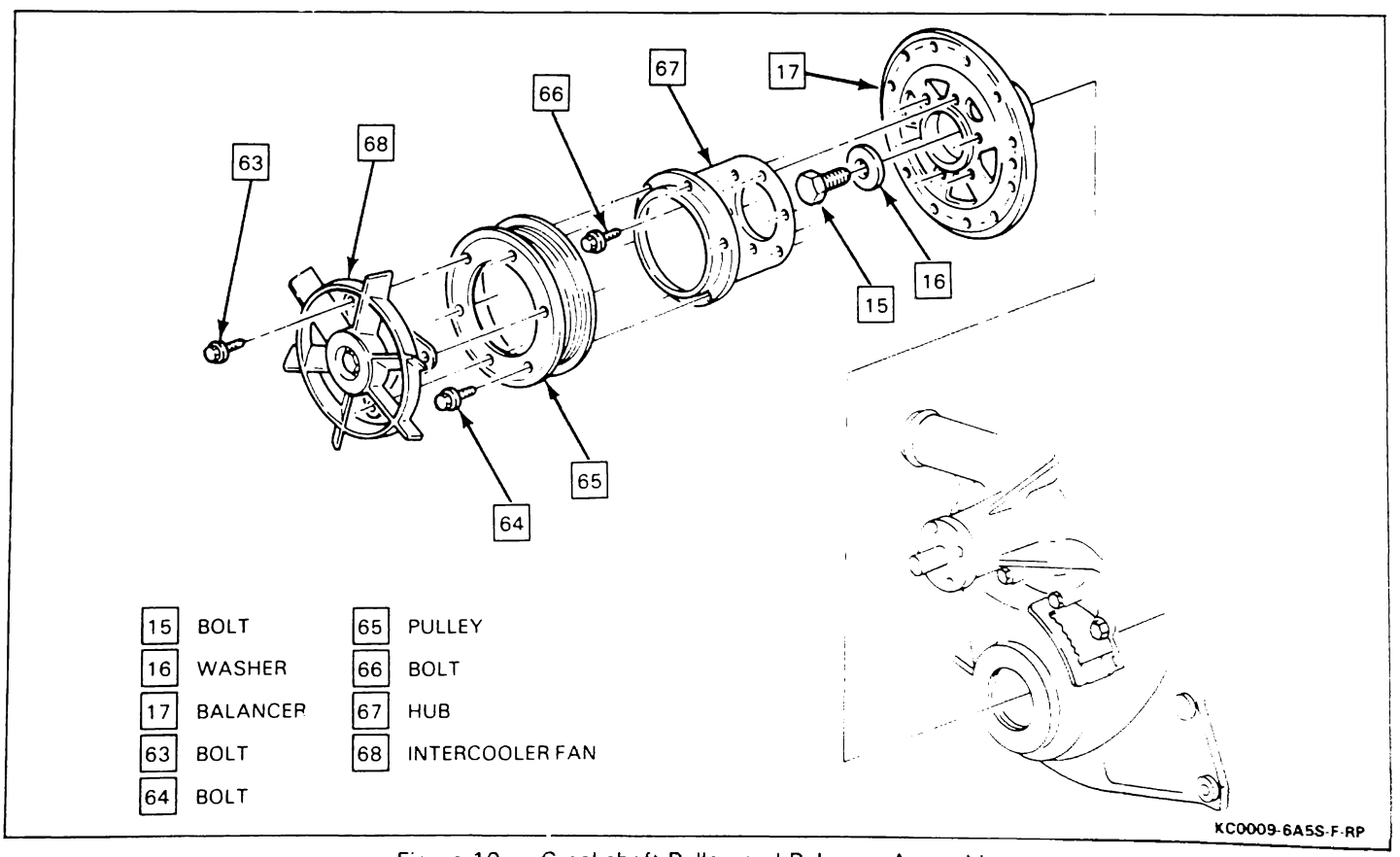

Figure 19 – Crankshaft Pulley and Balancer Assembly

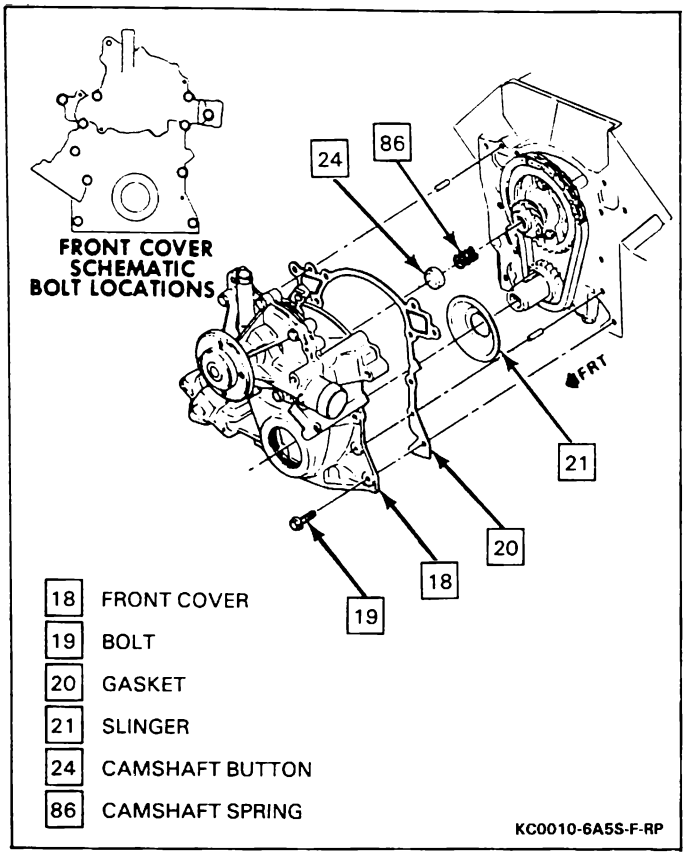

Figure 20 — Engine Front Cover

DRIVEABILITY AND EMISSIONS — FUEL INJECTION (PORT) (SEC. 6E3).

10. Front cover (18) and gasket (20).

Inspect

- Timing chain for "in and out" movement. This movement should not exceed 25.4 mm (1 inch).
- Sprockets for wear.

Clean

- Gasket mating surfaces at front cover, cylinder block and oil pan.

Install or Connect

NOTICE: The following step is very important because the oil pump may lose its prime whenever the pump, pump cover or front cover is disturbed. If the pump is not packed or primed it may not begin to pump oil as soon as the engine is started and engine damage may occur.

Important

- Remove oil pump cover and pack the space around the oil pump gears completely full of petroleum jelly. There must be no air space left. Reinstall cover using a new gasket. Pump may also be primed using J 25087-C. Refer to "Priming Oil Pump" in this section.

1. Gasket (20) and front cover (18).

NOTICE: See "Notice" on page 6A5-1 of this section.

2. Crankshaft speed sensor. Refer to DRIVEABILITY AND EMISSIONS — FUEL INJECTION (PORT) (SEC. 6E3) of this supplement.
3. Bolts (19) attaching front cover (18) to cylinder block using sealer, GM part number 1052080 or equivalent.

Tighten

- Bolts (19) to 30 N·m (22 lb. ft.).

4. Oil pan-to-front cover bolts.

Tighten

- Oil pan-to-front cover bolts to 10 N·m (89 lb. in.)

5. Sensor electrical connections.
6. Crankshaft balancer. Refer to "Crankshaft Balancer" in this section.
7. Front clamp on coolant bypass hose.
8. Radiator inlet hose to intake manifold.
9. Coolant pump. Refer to COOLING AND RADIATOR (SEC. 6B) of this supplement.
10. Oil cooler and adapter. Refer to "Oil Cooler and Adapter" in this section.

- Fill the cooling system as described in the 1989 Firebird Service Manual.

Adjust

- Camshaft position sensor. Refer to DRIVEABILITY AND EMISSIONS — FUEL INJECTION (PORT) (SEC. 6E3) of this supplement.

FRONT COVER OIL SEAL

Remove or Disconnect

1. Front cover. Refer to "Front Cover" in this section.
2. Oil seal packing and shedder using a drift to drive out from front to rear of cover.

Install or Connect

1. New oil seal packing by coiling around cover opening so ends of packing are at the top.
2. Shedder by driving in using a suitable punch. Stake shedder to the cover in three locations.

- Size the oil seal packing by rotating a hammer handle or other suitable tool around the oil seal packing until the balancer hub can be inserted through the opening.

3. Front cover. Refer to "Front Cover" in this section.

TIMING CHAIN AND SPROCKETS

Figure 21

Remove or Disconnect

1. Front cover. Refer to "Front Cover" in this section.
2. Crankshaft oil slinger.
3. Camshaft button and spring.
- Align timing marks on crankshaft and camshaft sprockets (22 and 26).
4. Timing chain damper (27), bolt (87) and spring (88).
5. Camshaft sprocket bolts (70).
6. Camshaft sprocket (26) and timing chain (25).
7. Crankshaft sprocket (22).

Clean

- Timing chain (25).
- Crankshaft sprocket (22) and camshaft sprocket (26).

Inspect

- All components for wear.

Important

- If the pistons have not been moved in the engine, go to the installation procedures. If the pistons have been moved, do the following:
  - Turn crankshaft so that the number one piston is at top dead center.
  - Turn camshaft with camshaft sprocket temporarily installed, until timing mark is straight down.

Install or Connect

1. Crankshaft sprocket (22).

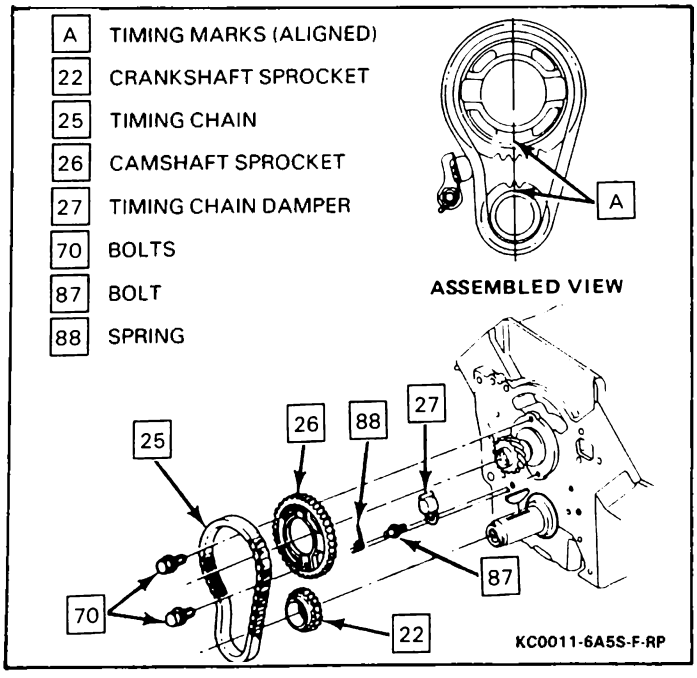

Figure 21 — Timing Chain and Sprockets

2. Camshaft sprocket (26) and timing chain (25).

NOTICE: See "Notice" on page 6A5-1 of this section.

3. Camshaft sprocket bolts (70).

Tighten

- Camshaft sprocket bolts (70) to 42 N·m (31 lb. ft.).

Inspect

- Crankshaft sprocket (22) and camshaft sprocket (26) for proper alignment of timing marks.

4. Timing chain damper (27), bolt (87) and spring (88).

Adjust

- Timing chain "in and out" movement so that it does not exceed 25.4 mm (1 inch).

Tighten

- Timing chain damper bolt (87) to 19 N·m (14 lb. ft.).

5. Camshaft button and spring.
6. Crankshaft oil slinger.
7. Front cover. Refer to "Front Cover" in this section.

CAMSHAFT

Figures 22 through 25

Remove or Disconnect

1. Intake manifold. Refer to "Intake Manifold" in this section.
2. Valve rocker covers. Refer to "Valve Rocker Covers" in this section.
3. Rocker arms and pushrods. Refer to "Rocker Arm Assemblies and Pushrods" in this section.
4. Valve lifters. Refer to "Valve Lifters" in this section.
5. Radiator as described in the 1989 Firebird Service Manual.
6. Air conditioning condenser as described in the 1989 Firebird Service Manual.

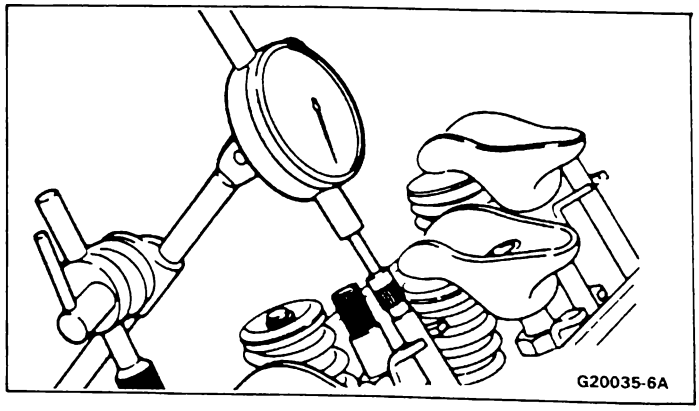

Figure 22 — Measuring Cam Lobe Lift

NOTICE: Align timing marks on crankshaft and camshaft sprockets to avoid damage to the camshaft bearing surfaces by the crankshaft.

7. Timing chain and sprocket. Refer to "Timing Chain and Sprockets" in this section.
8. Camshaft (28).

Inspect

- Sprocket.
- Keyway and threads.
- Bearing surfaces and lobes for wear, galling, gouges, and overheating (discoloration).

Important

- Do not attempt to repair the camshaft (28), replace it if damaged.
- If a new camshaft (28) is installed, all valve lifters must be replaced.

Measure

- Cam lobe lift.
  1. Lubricate the camshaft bearings with GM part number 1052365 or equivalent.
  2. Carefully insert the camshaft. If the camshaft bearings are badly worn or damaged, set the camshaft on "V" blocks instead.
  3. Attach a dial indicator with a ball socket attachment and measure the cam lobe lift. If any one cam lobe lift is out of specification, replace the camshaft.
- Bearing journals.
  - With a micrometer, measure run-out and diameter. If out of specification, replace the camshaft.

Important

- If a new camshaft has been installed, add GM part number 1052367 or equivalent to the engine oil.
- Coat cam lobes with GM part number 1052365 or equivalent.

Camshaft Bearings

Tool Required:
J 33049 Camshaft Bearing Remover/Installer

Disassemble

1. Camshaft rear cover.
2. Camshaft bearings (29) using J 33049.
   - Select the proper tool components according to the manufacturer's instructions.
   - Assemble bearing puller. Make sure the puller nut engages a sufficient number of threads.
   - Pull out bearings.

Important

- Camshaft bearings (29) must not be re-used once they have been removed.

Clean

- Sealing surfaces on the camshaft rear cover and on the cylinder block (1).

Assemble

NOTICE: Proper alignment of the bearing oil holes to the cylinder block oil passages is critical. Restriction of the oil flow will cause severe engine damage.

1. Camshaft bearings (29) using J 33049.
   - Select front, rear and intermediate camshaft bearings.
   - Select the proper pilot, nut and thrust washer.
   - Assemble installing tool.

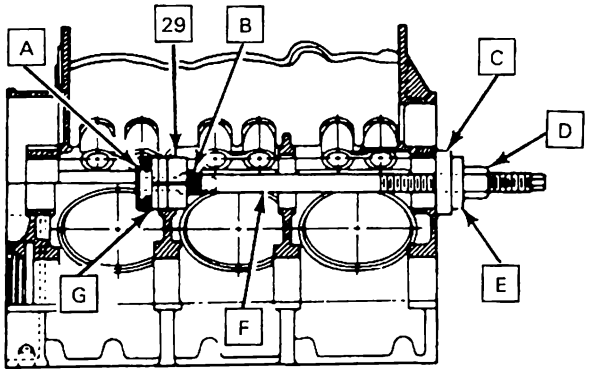

A	J 33049 BACK-UP NUT
B	J 33049 EXPANDING MANDREL
C	J 33049 PULLING PLATE
D	J 33049 PULLING NUT
E	J 33049 THRUST BEARING
F	J 33049 TWO-PIECE PULLER SCREW
G	J 33049 EXPANDING COLLET
29	CAMSHAFT BEARING

KC0029-6A5S-F-RP

Figure 23 — Removing/Installing Camshaft Bearings

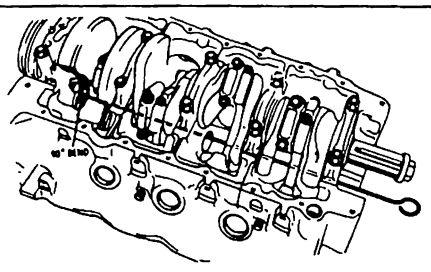

CHECKING OIL HOLE ALIGNMENT WITH BRASS ROD. MAKE ROD AS SHOWN USING 3/32" BRASS ROD ABOUT 30" LONG.

G34166-6A6-BG

Figure 24 — Checking Camshaft Bearing Oil Hole Alignment

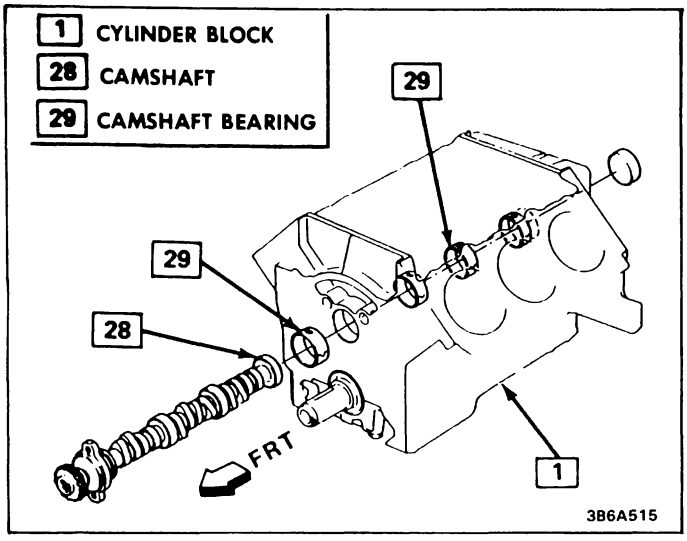

Figure 25 — Camshaft

- Place camshaft bearing (29) onto the tool and index the oil hole(s) of the camshaft bearing (29) with the oil passage(s) in the cylinder block (1). Pull camshaft bearing (29) into place.

Inspect

- With a piece of 3/32-inch brass rod with a 90 degree bend at the end, probe the bearing oil holes and verify that they are properly aligned.

2. Camshaft rear cover (soft plug).
   - Apply a 3 mm (1/8-inch) bead of GM part number 1052914 RTV sealer or equivalent to the cover before installing.

Install or Connect

1. Camshaft (28).
2. Timing chain and sprocket. Refer to "Timing Chain and Sprockets" in this section.
3. Air conditioning condenser as described in the 1989 Firebird Service Manual.
4. Radiator as described in the 1989 Firebird Service Manual.
5. Valve lifters. Refer to "Valve Lifters" in this section.
6. Rocker arms and pushrods. Refer to "Rocker Arm Assemblies and Pushrods" in this section.
7. Valve covers. Refer to "Valve Rocker Covers" in this section.
8. Intake manifold. Refer to "Intake Manifold" in this section.

OIL PAN

Figure 26

Remove or Disconnect

1. Windshield wiper motor as described in the 1989 Firebird Service Manual.
2. Ignition module.

- Raise and suitably support vehicle as described in the 1989 Firebird Service Manual.
- Drain engine oil.

3. Crossover pipe. Refer to EXHAUST SYSTEM (SEC. 6F) of this supplement.
4. Torque converter cover bolts and cover.
5. Engine mount through bolts and nuts.

- Raise and suitably support engine.

6. Nut and transmission oil cooler line bracket from stud on oil pan.
7. Nut and electrical harness bracket from stud on oil pan.
8. Oil pan bolts (33).
9. Oil pan (32) and gasket (71).

Clean

- Oil pan and cylinder block gasket mating surfaces.

Install or Connect

NOTICE: See "Notice" on page 6A5-1 of this section.

1. New oil pan gasket (71) to flange of oil pan (32).
2. Oil pan (32) and gasket (71) to cylinder block.
3. Oil pan bolts (33).

NOTICE: Do not overtighten oil pan bolts or damage to the oil pan will occur resulting in an oil leak.

Tighten

- Oil pan bolts (33) to 10 N·m (89 lb. in.).

4. Electrical harness bracket and nut to stud on oil pan.
5. Transmission oil cooler line bracket and nut to stud on oil pan.

- Lower engine.

6. Engine mount through bolts and nuts.

Tighten

- Engine mount through bolt nuts to 68 N·m (50 lb. ft.).

7. Torque converter cover and bolts.

Tighten

- Torque converter cover bolts to 6 N·m (53 lb. in.).

8. Crossover pipe. Refer to EXHAUST SYSTEM (SEC. 6F) of this supplement.

- Lower vehicle.

9. Ignition module.
10. Windshield wiper motor as described in the 1989 Firebird Service Manual.

- Add engine oil to proper level.
- Prime turbocharger with engine oil. Refer to TURBOCHARGER (SEC. 6J) of this supplement.

OIL PUMP PIPE AND SCREEN ASSEMBLY

Figure 2

Remove or Disconnect

1. Oil pan. Refer to "Oil Pan" in this section.

2. Bolts (36) attaching oil pump pipe and screen (34) to cylinder block (1).
3. Oil pump pipe and screen (34) and gasket (35).

Clean

- Screen with solvent and blow dry.
- Pipe flange and cylinder block mating surfaces.

Install or Connect

1. Oil pump pipe and screen (34) and new gasket (35) to cylinder block (1).

   NOTICE: See "Notice" on page 6A5-1 of this section.

2. Bolts (36).

   Tighten

   - Bolts (36) to 11 N·m (97 lb. in.).
3. Oil pan. Refer to "Oil Pan" in this section.

TESTING OIL PRESSURE

Tool Required:
J 25087 Oil Pressure Test Kit
If low oil pressure is suspected, the pressure can be checked on the car using J 25087.

1. Check oil level.
2. Raise car and remove oil filter.
3. Assemble plunger valve in the large hole of the tester base and the hose in the small hole of the tester base. Connect gage to the end of the hose.
4. Insert the flat side of the rubber plug, for ease of installation, in the by-pass valve without depressing the by-pass valve itself.
5. Install the tester on filter mounting pad.
6. Start engine to check overall pressure, sender switch, or noisy lifters. Engine should be at operating temperature before checking oil pressure. Pressure should be 255 kPa (37 psi) at 2400 rpm.
7. If adequate oil pressure is indicated, replace pressure sending switch.
8. If a low reading is indicated, depress the valve on tester base to isolate the oil pump and/or its components from the lubricating system. An adequate reading at this time would indicate a good pump and the previous low pressure was due to worn bearings etc. A low reading while depressing the valve would indicate a faulty pump.

PRIMING OIL PUMP

Tool Required:
J 25087 Oil Pressure Test Kit

1. Assemble plunger valve in the large hole of the tester base and the hose in the small hole of the tester base. Connect gage to the end of the hose.
2. Insert the flat side of the rubber plug, for ease of installation, in the by-pass valve without depressing the by-pass valve.
3. Install the tool on filter mounting pad.
4. Connect a pressurized air supply to the primer attachment.
5. Depress lever on primer attachment while at the same time holding valve on tester base down to assure that oil will be lifted instead of air being drawn from bearings etc. Hold these positions until a light spray of oil comes from the nozzle verifying that the oil pump has been primed.
6. Remove primer assembly, install filter, and start engine.

- In the event of failure to raise oil during priming operation, check for vented system, such as cracked or broken pump body or relief valve in open position.
- If oil can be lifted during priming operation, but pump fails to function, check for worn or broken pump drives. A broken or twisted pump drive may indicate a locked-up (frozen) oil pump. Inspect and replace as necessary.

OIL COOLER AND ADAPTER

Remove or Disconnect

1. Oil filter.

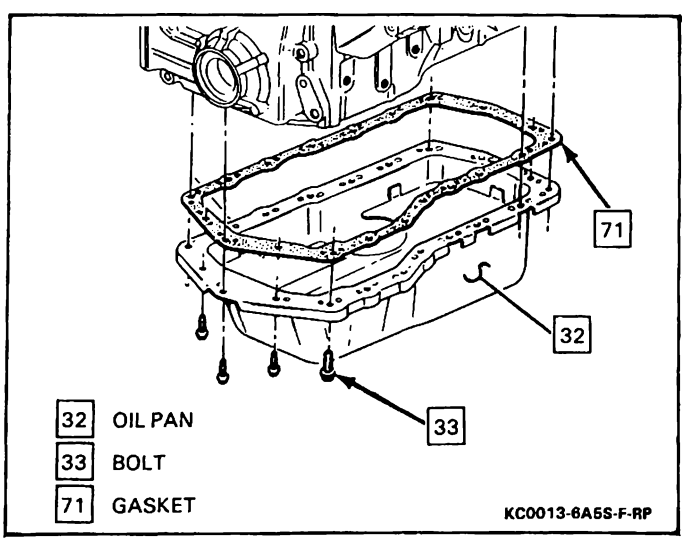

Figure 26 — Oil Pan and Gasket

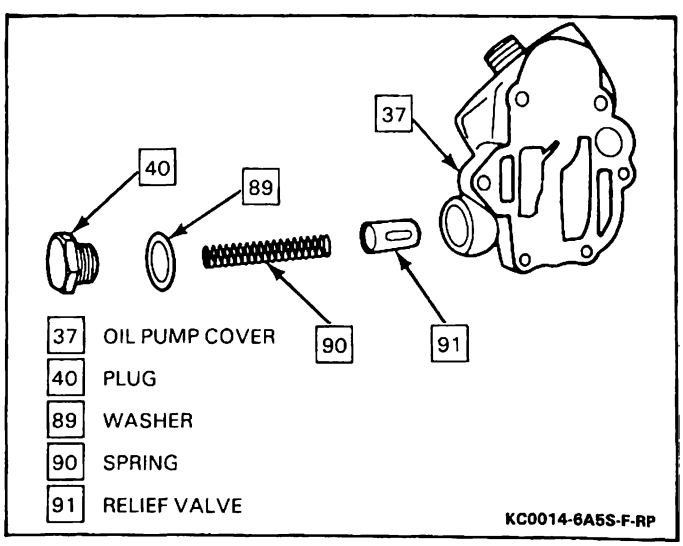

Figure 27 — Oil Pump Cover and Relief Valve Assembly

- Drain radiator as described in the 1989 Firebird Service Manual.
2. Hoses from oil cooler.
3. Oil cooler by loosening retainer.
4. Snap ring and retainer if replacing oil cooler.
5. Electrical connection from oil pressure sending unit.
6. Oil pressure sending unit.
7. Adapter plate retainer.
8. O-ring seal and adapter plate.

Install or Connect

1. New O-ring seal to adapter plate.
2. Adapter plate and retainer to oil pump cover.
3. Oil pressure sending unit.
4. Electrical connection to oil pressure sending unit.
5. Retainer and snap ring to new oil cooler if necessary.
6. Oil cooler and retainer to adapter plate.
7. Hoses to oil cooler.
8. Oil filter.

- Add engine oil to proper level.
- Prime turbocharger with engine oil. Refer to TURBOCHARGER (SEC. 6J) of this supplement.

OIL PUMP COVER AND GEARS

Figure 27

Remove or Disconnect

1. Front cover. Refer to "Front Cover" in this section.
2. Oil pump cover bolts.
3. Oil pump cover.
4. Drive gear and idler gear.
5. Oil pressure relief valve plug (40), washer (89), spring (90), and relief valve (91).

Important

- Oil filter by-pass valve and spring are staked in place and should not be removed.

Clean

- Clean all parts in suitable solvent to remove varnish, sludge and dirt.

Inspect

- Pump cover and front cover for:
  - Cracks.
  - Scoring.
  - Porous or damaged casting.
  - Damaged threads.
  - Excessive wear.
- Pressure regulator valve for:
  - Scoring.
  - Sticking in bore.
  - Burrs.
- Pressure regulator springs for:
  - Loss of tension.
  - Bent condition.
  - If in doubt, replace the spring.
- Oil pump gears for:
  - Chipping.
  - Galling.
  - Excessive wear.
- Drive shaft for:
  - Looseness.
  - Wear.

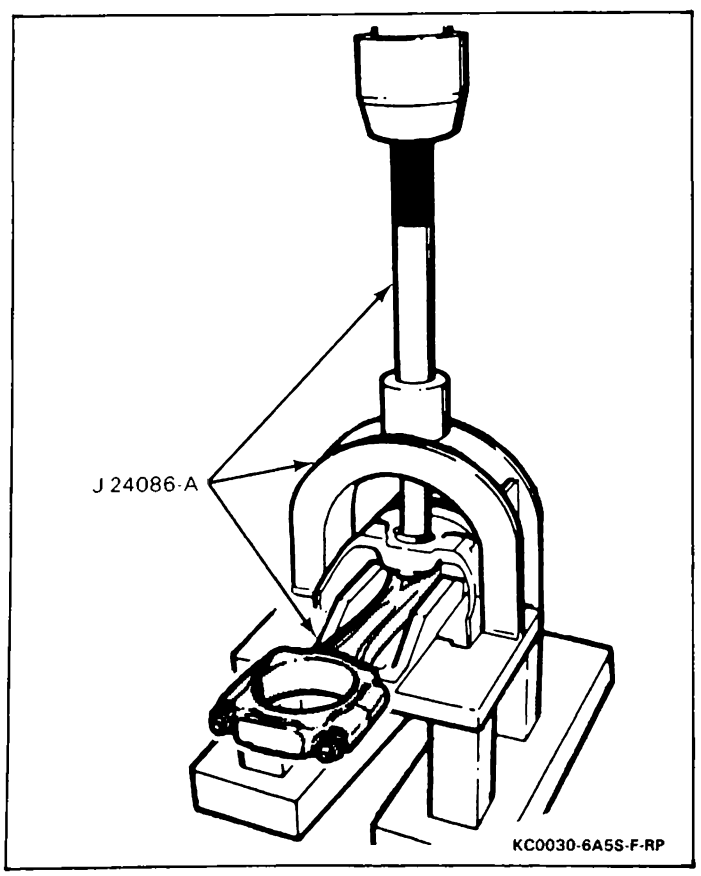

Figure 28 — Removing Piston Pin

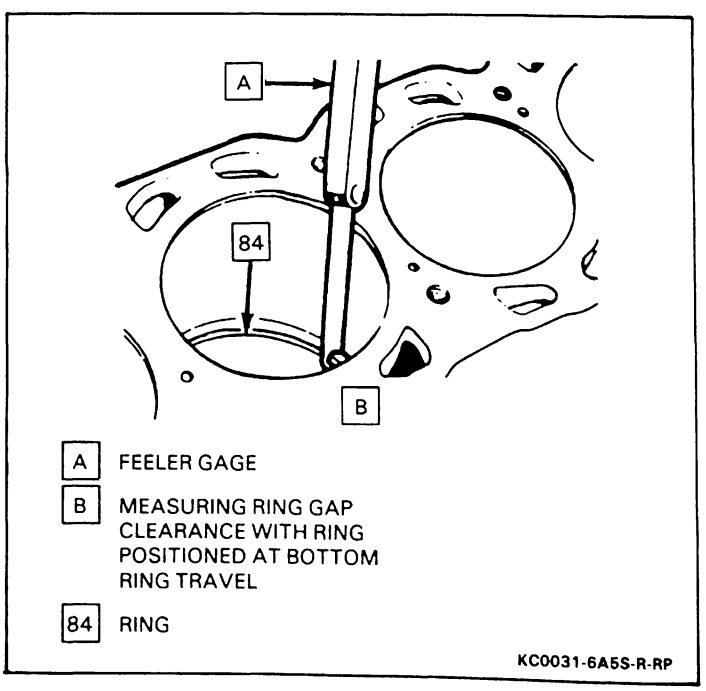

Figure 29 — Measuring Piston Ring Gap

Measure

- Refer to oil pump specifications.
- Gear lash. Install gears, marking toward the timing cover and measure in several places.
- Pump housing gear pocket.
- Gears.
- Gear side clearance.
- Gear end clearance.

Important

- When deciding pump servicability based on end clearance, consider depth of wear pattern in the pump cover and/or cover plate.

Install or Connect

1. Oil pressure relief valve plug (40), washer (89), spring (90) and relief valve (91) after lubricating with engine oil.

Tighten

- Oil pressure relief valve plug (40) to 48 N·m (35 lb. ft.).

2. Oil pump drive gear and idler gear.

NOTICE: The following step is very important because the oil pump may lose its prime whenever the pump, pump cover or front cover is disturbed. If the pump is not packed or primed, it may not begin to pump oil as soon as the engine is started and engine damage may occur.

- Lubricate and pack the space around the oil pump gears completely full of petroleum jelly. There must be no air space left. Pump may also be primed using J 25087. Refer to "Priming Oil Pump" in this section.

3. Oil pump cover (37) and new gasket.

NOTICE: See "Notice" on page 6A5-1 of this section.

4. Oil pump cover bolts.

Tighten

- Oil pump cover bolts to 16 N·m (12 lb. ft.) alternately and evenly.

5. Front cover. Refer to "Front Cover" in this section.

- Add engine oil to proper level.
- Prime turbocharger with engine oil. Refer to TURBOCHARGER (SEC. 6J) of this supplement.

PISTON AND CONNECTING ROD ASSEMBLY

Figures 28 through 33

Remove or Disconnect

1. Intake manifold. Refer to "Intake Manifold" in this section.
2. Cylinder head. Refer to "Cylinder Head" in this section.
3. Oil pan. Refer to "Oil Pan" in this section.
4. Ridge or carbon build-up from the top end of the cylinder.
   - Turn crankshaft until piston is at the bottom of the stroke.
   - Use a ridge reamer to remove the ridge.

Important

- Place matchmarks or number the pistons, connecting rods and caps so they can be installed in their original locations.

5. Connecting rod cap bolts, caps and bearings.
6. Piston and connecting rod assembly (41) through the top of the cylinder bore.

Disassemble

Tool Required:
J 24086-A Piston Pin Remover/Installer

- Piston and connecting rod assembly (41).

CAUTION: Use care when handling the piston. Worn piston rings are sharp and may cause bodily injury.

- Piston rings. Use a suitable tool to expand the rings (84). Piston rings (84) must not be re-used.
- Place the piston and connecting rod assembly into J 24086-A and press out the piston pin.

Clean

- Piston, piston pin and connecting rod of sludge and carbon.
  - It is essential that the piston ring grooves are cleaned of carbon to the bare metal.
  - Remove varnish from the piston pin by soaking in carburetor cleaning solution.

CAUTION: Avoid inhaling fumes or exposure of the skin to carburetor cleaning fluid, as bodily injury may result.

- Do not scrape the piston skirt.

Inspect

1. Connecting rod for bending or twisting.
   - Install the connecting rod cap and torque to specifications.

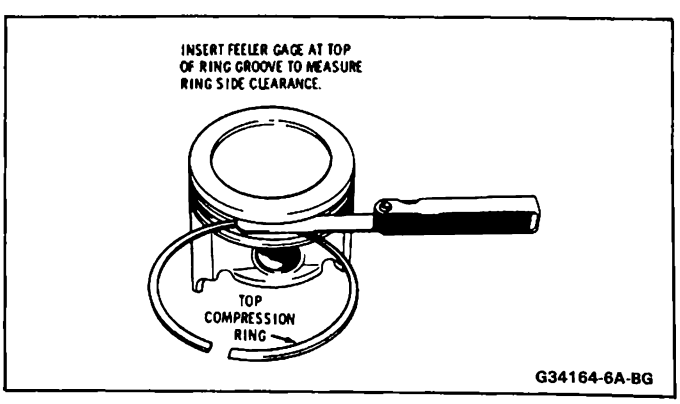

Figure 30 — Measuring Piston Ring Side Clearance

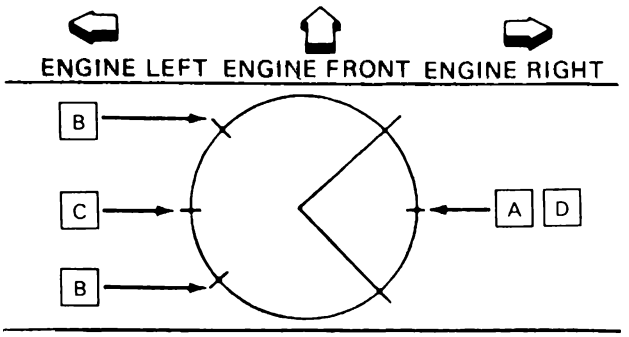

Figure 31 — Piston Ring Gap Locations

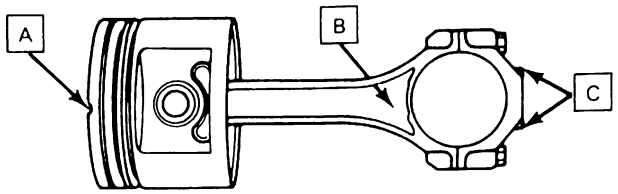

Figure 32 — Piston and Connecting Rod Assembly

- Place the connecting rod assembly on a checking fixture and check for bending or twisting.
- Do not attempt to straighten the connecting rod. If bent or twisted, replace it. Check new connecting rods before using them.

2. Outside of the connecting rod bearing and the I.D. of the connecting rod lower end for wear indicating high spots in the connecting rod lower end.
3. Connecting rod bolts for stretching by comparing them with a new bolt.
4. Upper end for scoring.
5. Piston pin for:
   - Scoring.
   - Galling caused by improper installation.
   - Fit in connecting rod and piston.
6. Piston for:
   - Scoring of the skirt.
   - Cracks.
   - Broken ring groove lands.
   - Wear.

Measure

- Piston rings (84). Refer to "Specifications" in this section.
  - Select a set of new piston rings.
- Piston ring end gap.
  - Place piston into the cylinder at the bottom of the ring travel.
  - Place a piston ring on top of the piston.
  - Back off the piston.
  - Measure the ring gap. If the gap is below specification, increase the gap by carefully filing off excess material.
- Piston ring side clearance (compression rings).
  - Roll the piston ring (84) around the groove in which it is to be installed and measure the side clearance. If the ring is too thick, try another ring. If no ring can be found that fits the specifications, the ring may be ground to size with emery paper placed on a plate of glass.

NOTICE: Do not attempt to cut the ring groove, although high spots in the ring groove may be cleaned up by careful use of a point file.

Assemble

Tool Required:
J 24086-A Piston Pin Remover/Installer

1. Connecting rod and piston.

Important

- The piston must be mounted on the connecting rod in such a manner that the mark on the piston lines up with the side of the connecting rod that faces the front of the engine.
  - Place piston and connecting rod into Fixture J 24086-A.
  - Adjust plunger of the fixture.
  - Coat the piston pin with clean engine oil.
  - Press the piston pin into place.

Inspect

- Piston for freedom of movement.

NOTICE: Use a piston ring expander to install the rings (84). Avoid expanding the rings (84) more than necessary, which may cause ring damage.

2. Oil control ring assembly.
   - Expander.
   - Lower oil control ring.

- Upper oil control ring.

3. Upper and lower compression ring with manufacturers mark facing up.

Important

- In order to provide an effective compression seal, the ring gaps must be staggered (Figure 31).

Install or Connect

Tool Required:
J 8037 Piston Ring Compressor

Clean

- Cylinder walls and crankshaft journals with hot water and detergent.
- Swab bores with engine oil and a clean, dry cloth.

- Lubricate cylinder walls, piston rings and bearing surfaces with clean engine oil.

1. Piston into its original or fitted cylinder bore using J 8037 and tapping lightly with a wooden hammer handle until piston rings (84) have entered cylinder bore.

Important

- Make sure piston and connecting rod are properly aligned to cylinder bore (Figure 32).

2. Connecting rod bearings.
3. Connecting rod caps onto their original connecting rods.

NOTICE: See "Notice" on page 6A5-1 of this section.

4. Connecting rod cap bolts.

NOTICE: Carefully tap connecting rod caps into place. Do not draw caps into place using the cap bolts or damage may result.

Tighten

- Connecting rod cap bolts alternately to torque angle spec 34 N•m plus 45 degrees (22 lb. ft. plus 45 degrees).

Inspect

- Pry the connecting rod back and forth with a suitable tool and check for binding. If necessary, loosen and re-tighten the bearing cap.

5. Oil pan. Refer to "Oil Pan" in this section.
6. Cylinder head. Refer to "Cylinder Head" in this section.
7. Intake manifold. Refer to "Intake Manifold" in this section.

PISTON FITTING

Figures 34 and 35

Remove or Disconnect

- Pistons and connecting rods. Refer to "Piston and Connecting Rod Assembly" in this section.

Important

- When fitting pistons, both piston and cylinder bore condition must be considered together. Production and service pistons have the same nominal weight and can be intermixed without affecting engine balance. If necessary, used pistons may be fitted selectively to any cylinder of the engine, providing they are in good condition.
- Do not cut oversize pistons down or engine balance will be affected.

Measure

1. Piston. If worn or damaged, replace with a standard or oversize piston.
2. Cylinder bore. Refer to "Cylinder Block" in this section. If worn beyond specifications, re-bore and hone to size.

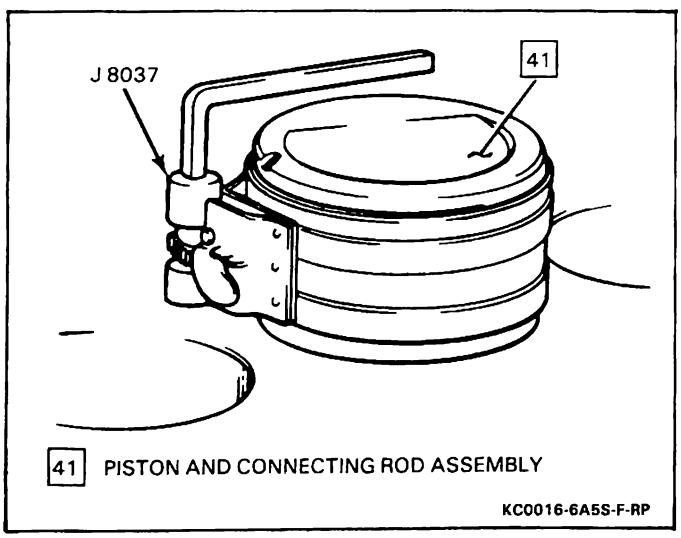

Figure 33 — Installing Piston Using Piston Ring Compressor

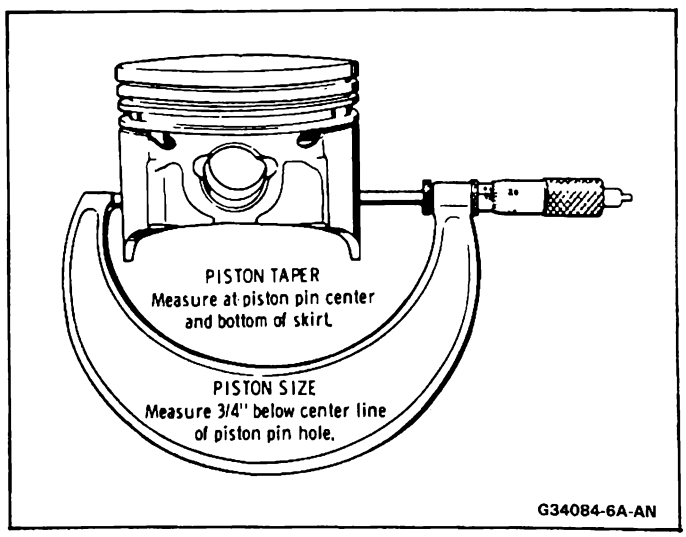

Figure 34 — Measuring Piston

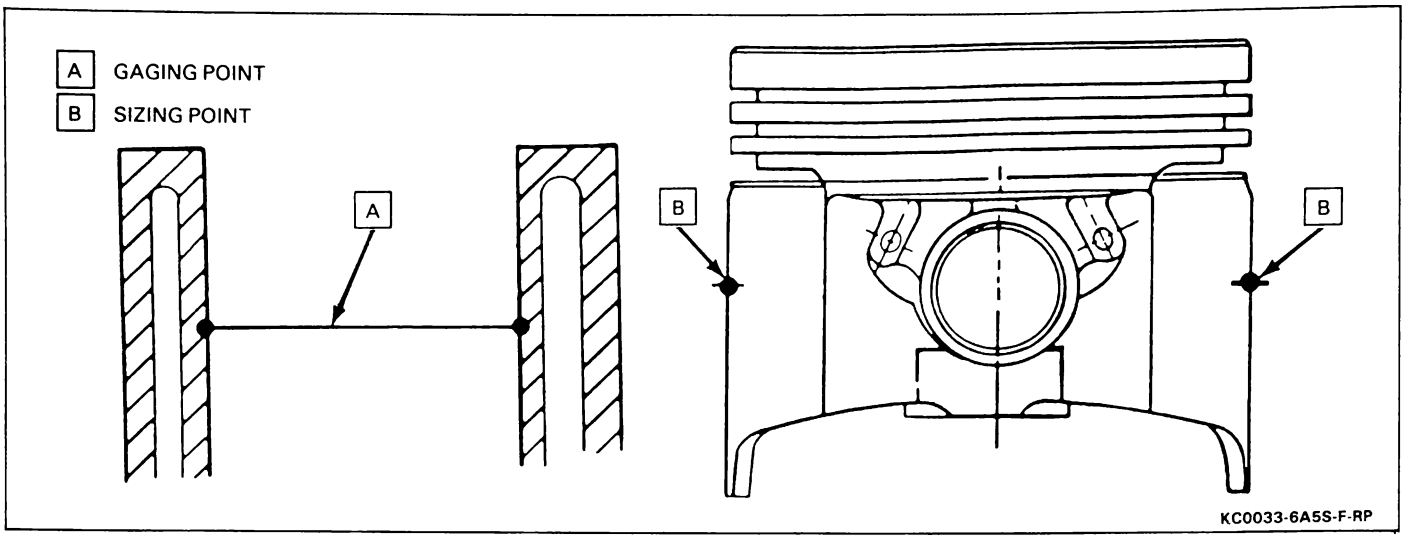

Figure 35 — Cylinder Bore and Piston Gaging Points

Important

- Finish hone when selecting piston.

3. Fit piston to cylinder.

Clean

- Scrub the cylinder bore with soap and water and remove all foreign material. Dry, and rub in clean engine oil.

Measure

1. Check used piston to cylinder bore clearance as follows:
   - Measure the cylinder bore diameter with a telescoping gage.
   - Measure the piston diameter. When measuring piston for size or taper, measurement must be made as shown with the piston pin removed (Figure 34).
   - Subtract piston diameter from cylinder bore diameter to determine piston-to-bore clearance.
   - Compare piston-to-bore clearance obtained to cylinder and piston specifications to determine if clearance is in acceptable range.
2. If used piston is not acceptable, check service piston sizes and determine if a new piston can be selected. Service pistons are available in standard, high limit standard, 0.010 inch oversize, and 0.030 inch oversize.
3. If cylinder bore must be re-conditioned, measure new piston diameter, then hone cylinder bore to obtain preferable clearance.
4. Select new piston and mark piston to identify the cylinder for which it was fitted. Oversize pistons may be found on some vehicles, these pistons will be 0.010 inch oversize.

Install or Connect

- Pistons and connecting rods. Refer to "Piston and Connecting Rod Assembly" in this section.

CRANKSHAFT

Figure 36

Remove or Disconnect

1. Engine. Refer to "Engine Assembly" in this section.
2. Timing chain. Refer to "Timing Chain and Sprockets" in this section.
3. Oil pump pipe and screen assembly. Refer to "Oil Pump Pipe and Screen Assembly" in this section.
4. Spark plugs.

Important

- Place matchmarks or number the connecting rod cap bolts, caps and bearings so they can be installed in their original locations.

5. Connecting rod cap bolts, caps and bearings.
- Push piston and connecting rod assemblies to the top of the cylinder bores. Secure connecting rods to the outside of the cylinder bore using rubber bands attached to oil pan rail bolts.

6. Main bearing cap bolts.
7. Main bearing caps.
8. Crankshaft (49).
9. Main bearings (46 and 48).

Clean

- Crankshaft (49) using a suitable solvent and dry with compressed air.

Inspect

- Keyway.
- Threads.
- Bearing journals and thrust surfaces for:
  - Cracks.
  - Chips.
  - Gouges.
  - Roughness.
  - Grooves.

- Overheating (discoloration).
- If cracks, severe gouges or burned spots are found, replace the crankshaft. Slight roughness may be removed with a fine polishing cloth soaked in engine oil. Burrs can be removed with a fine oil stone.

- Bearing inserts for imbedded foreign material and determine its source. Refer to "Connecting Rod and Main Bearings" in this section.

Measure

- Crankshaft journals. Refer to "Connecting Rod and Main Bearings" in this section.

Install or Connect

NOTICE: See "Notice" on page 6A5-1 of this section.

1. Main bearings (46 and 48) into cylinder block and main bearing caps. Do not obstruct any oil passage.
   - Coat bearings with engine oil.
2. Crankshaft (49).
3. Main bearing cap with assembled main bearings (46 and 48).
4. Main bearing cap bolts. Set center main bearing thrust flanges by bumping in each direction with a wooden block.

Tighten

- Main bearing cap bolts alternately to 135 N·m (100 lb. ft.).

5. Connecting rod bearings in their original location.
6. Connecting rods to crankshaft.
7. Connecting rod caps in their original location.
8. Connecting rod cap bolts.

Tighten

- Connecting rod cap bolts alternately to 54 N·m (40 lb. ft.).

9. Spark plugs.

Tighten

- Spark plugs to 27 N·m (20 lb. ft.).

10. Oil pump pipe and screen assembly. Refer to "Oil Pump Pipe and Screen Assembly" in this section.
11. Timing chain. Refer to "Timing Chain and Sprockets" in this section.
12. Engine. Refer to "Engine Assembly" in this section.

CONNECTING ROD AND MAIN BEARINGS

Figures 37 through 40

Engine bearings are the precision insert type. They are available for service use in standard and various undersizes.

Remove or Disconnect

1. Crankshaft. Refer to "Crankshaft" in this section.
2. Connecting rod bearings.

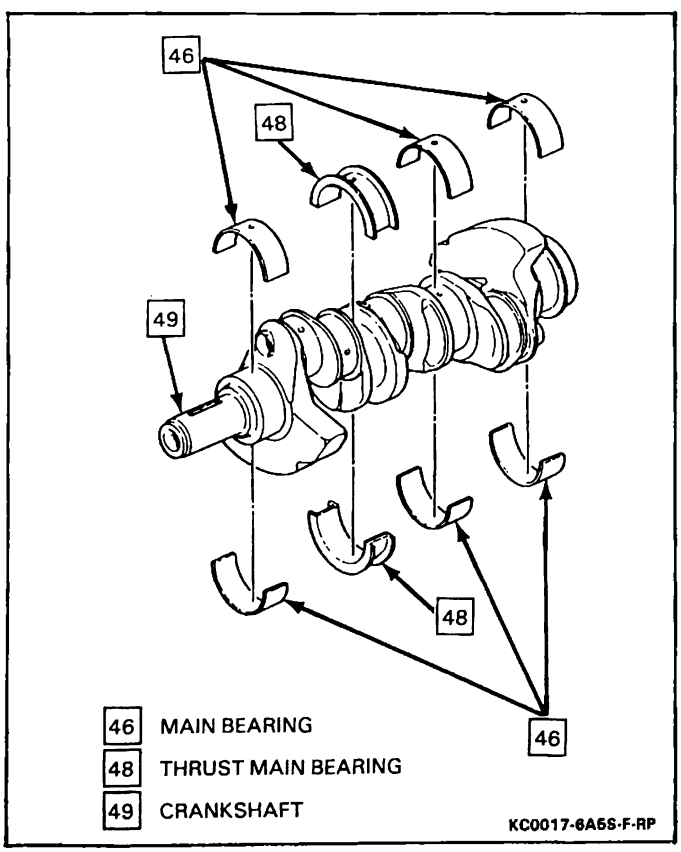

Figure 36 — Crankshaft

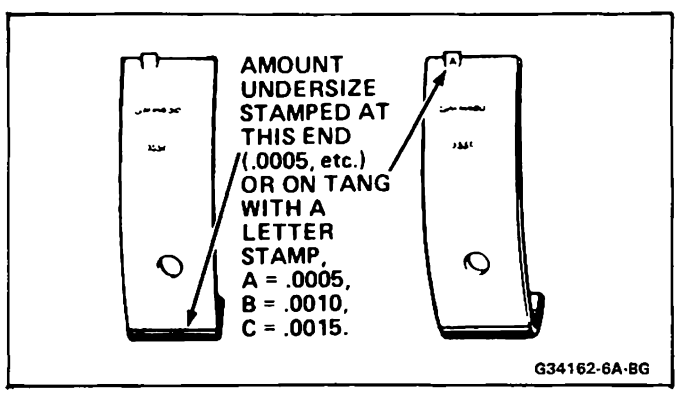

Figure 37 — Bearing Insert Markings

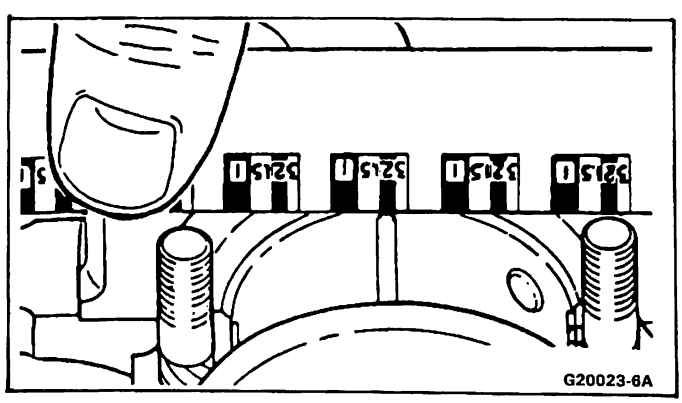

Figure 38 — Measuring Bearing Clearance

NOTICE: Bearing inserts must not be shimmed, scraped or filed. Do not touch the bearing surface of the insert with the bare fingers. Skin oil and acids will etch the bearing surface.

Inspect

1. Bearing surfaces for:
   - Wear.
   - Gouges.
   - Imbedded foreign material. If foreign material is found, determine its nature and source. Inspect oil pan for sludge and residue.
   - Uneven side to side wear. If uneven wear is found, check for a bent crankshaft or tapered bearing journals.
2. Outer surfaces for:
   - Wear. Surface wear indicates either movement of the insert or high spots in the surrounding material (spot wear).
   - Overheating (discoloration).
   - Looseness or rotation (flattened tangs and wear grooves).
3. Thrust surfaces (main thrust bearing) for:
   - Wear.
   - Grooving. Grooves are caused by irregularities of the crankshaft thrust surface. Refer to "Crankshaft" in this section.

Important

- Bearing failure, other than normal wear, must be investigated carefully. Inspect the crankshaft or connecting rod and the bearing bores.
- To inspect connecting rods or main bearing bores:
  - Torque the bearing cap to specifications.
  - Measure the bore for taper and out of round.
  - No taper or out of round should exist.
4. Bearing cap bolts. If bolts are stretched, replace them.
   - To determine if a bolt is stretched, compare it to a new bolt.

Measure

- Bearing clearance. To determine the correct replacement insert size, the bearing clearance must be measured accurately. Either of the following two methods may be used, however, method "A" gives more reliable results and is preferred. Refer to "Specifications" in this section.

Important

- Method "A" yields measurements from which the bearing clearance can be computed. Method "B" does not give any indication of bearing or journal run-out.
- Do not mix inserts of different nominal size in the same bearing bore.

- Method "A"
  1. Measure the crankshaft journal diameter with a micrometer in several places, approximately 90 degrees apart, and average the measurements.
  2. Calculate taper and run-out.
  3. With the bearing inserts installed in the correct bore (cylinder block or connecting rod) and torqued to specification, measure the bearing insert I.D. with an inside micrometer. Measure using new inserts if the inserts are being replaced.

Important

- If the readings are within limits, select a suitable set of inserts. Bearing sets are available in various undersizes in order to keep clearances within limits. If clearances cannot be brought into specifications with selectively fitting bearings, the crankshaft can be refinished and installed with undersize

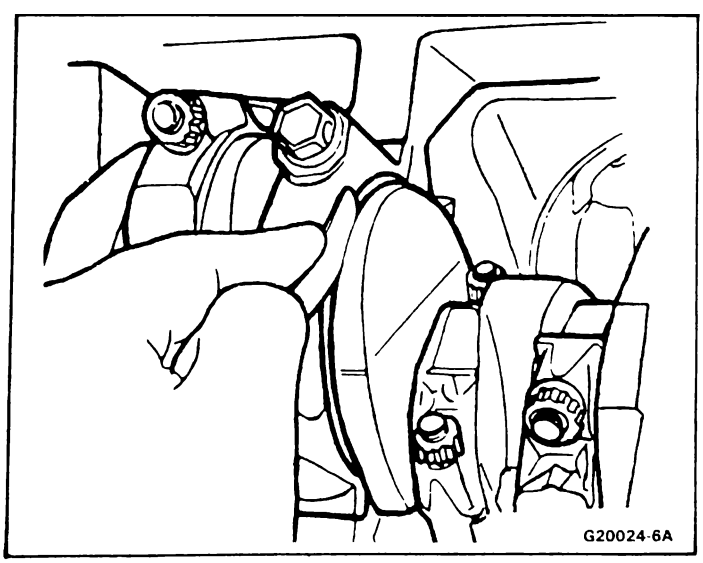

Figure 39 – Measuring Crankshaft End Play

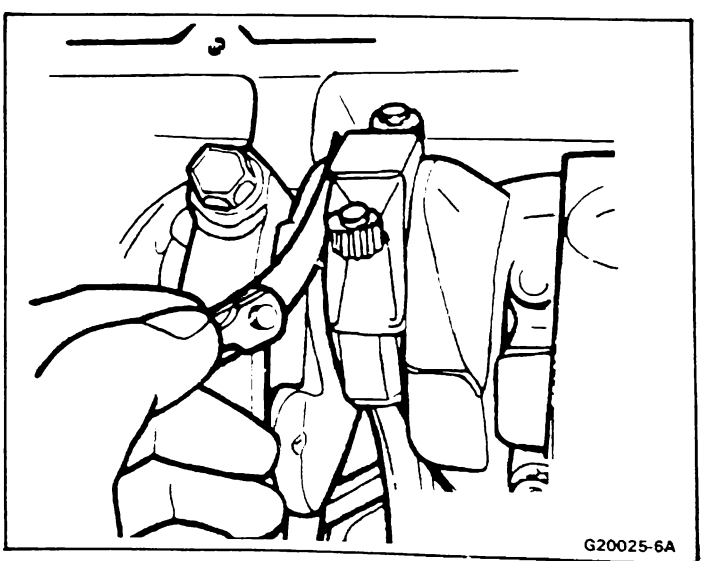

Figure 40 – Measuring Connecting Rod Side Clearance

bearings. Rolled fillet crankshafts cannot be refinished and should be replaced.

- Method "B"
  1. Install bearing inserts and crankshaft into block.
  2. Place a piece of gaging plastic across the entire bearing width.

NOTICE: In order to prevent the possibility of cylinder block and/or main bearing cap damage, the main bearing caps are to be tapped into their cylinder block cavity using a brass, lead or leather mallet before attaching bolts are installed. Do not use attaching bolts to pull main bearing caps into their seats. Failure to observe this information may damage a cylinder block or bearing cap.

3. Seat the bearing cap carefully by tapping it lightly with a suitable tool.
4. Torque bearing cap bolts to specification.

Important

- Do not rotate the crankshaft.

5. Remove the bearing cap, leaving the gaging plastic in place. It does not matter whether the gaging plastic adheres to the journal or to the bearing cap.
6. Measure the flattened gaging plastic at its widest point with the scale printed on the gaging plastic package.
7. Remove all traces of the gaging plastic after measuring.

Important

- Bearing sets are available in various undersizes in order to keep clearances within limits. Rolled fillet crankshafts cannot be refinished and should be replaced.

Install or Connect

1. Connecting rod bearings.
2. Crankshaft. Refer to "Crankshaft" in this section.

Inspect

- Pry the connecting rods back and forth and check for binding. If necessary loosen and re-tighten the bearing cap.

Measure

- Crankshaft end play and connecting rod side clearance. Refer to "Specifications" in this section.

CYLINDER BLOCK

Figures 41 through 44

Tool Required:
J 8087 Cylinder Bore Checking Gage

Remove or Disconnect

1. Engine. Refer to "Engine Assembly" in this section.
2. Cylinder heads. Refer to "Cylinder Head" in this section.
3. Valve lifters. Refer to "Valve Lifters" in this section.
4. Camshaft and bearings. Refer to "Camshaft" in this section.
5. Crankshaft. Refer to "Crankshaft" in this section.
6. Pistons and connecting rods. Refer to "Piston and Connecting Rod Assembly" in this section.
7. Cooling jacket plugs.
   - Obtain a suitable self-threading screw.
   - Drill a hole into the plug.
   - Install the self-threading screw.
   - Pry out plug.
8. Oil gallery screw plugs.

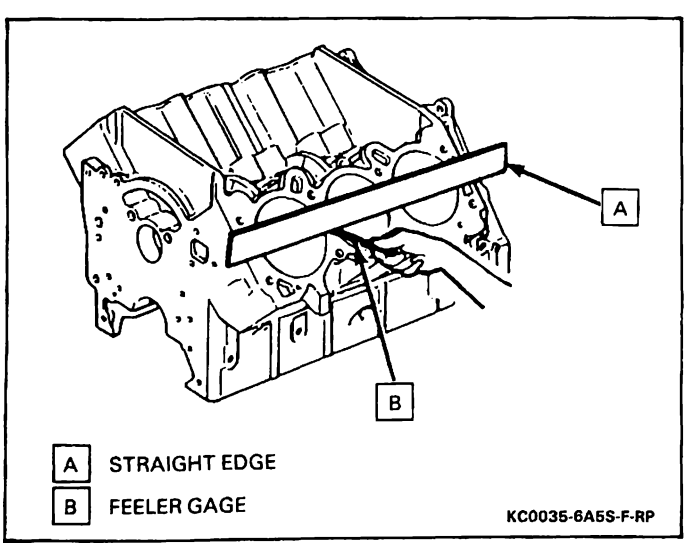

Figure 41 — Checking Cylinder Block for Flatness

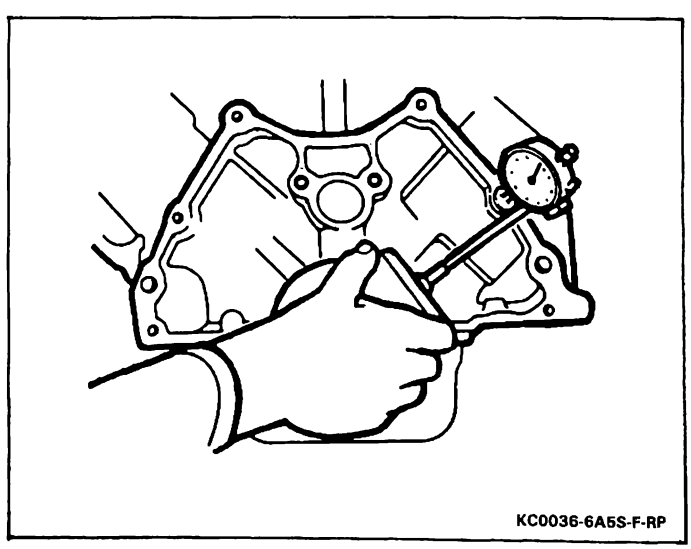

Figure 42 — Measuring Transmission Mounting Surface Runout

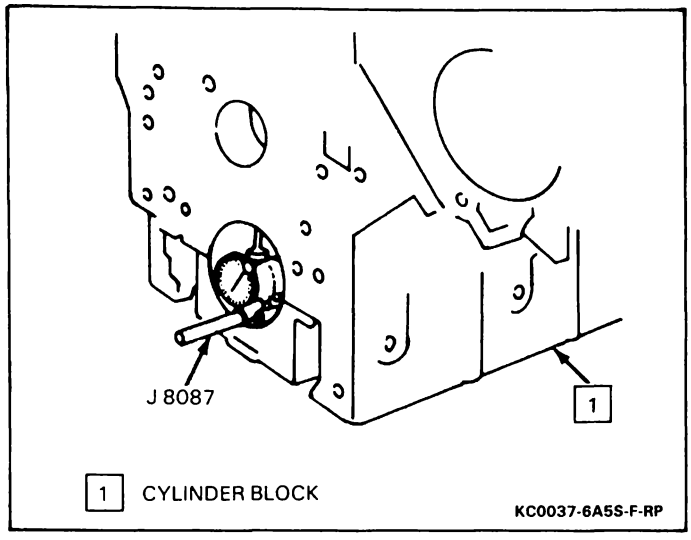

Figure 43 — Measuring Bearing Bore

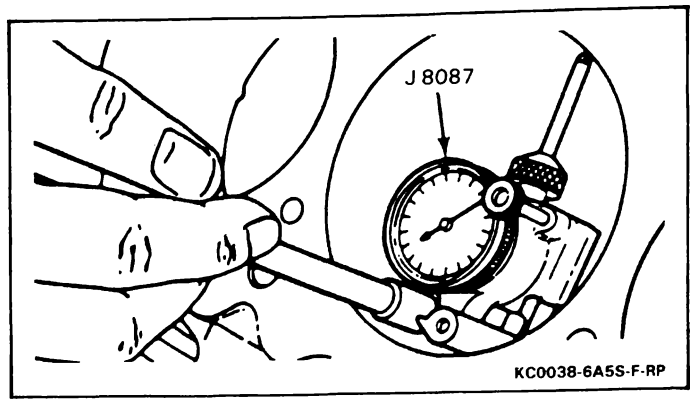

Figure 44 — Measuring Cylinder Bore For Taper and Out-of-Round

Clean

NOTICE: Caustic cleaning solution destroys the bearing material. All bearings must be replaced after cleaning with a caustic solution. Do not clean aluminum parts with caustic solutions.

- Sealing material from mating surfaces.
- Boil in caustic solution.
  - Flush with clean water or steam.
- Oil passages.
- All blind holes.
- Spray or wipe cylinder bores and machined surfaces with engine oil.

Inspect

- Deck surface for flatness. Use a straight edge and a feeler gage. Minor irregularities may be carefully machined. If more than 0.25 mm (0.010 inch) must be removed, replace the block.
- Oil pan rail and timing cover attaching area for nicks. Minor irregularities may be cleaned up with a flat mill file.
- Transmission case mating surface.

NOTICE: If this surface is not flat, a broken flexplate may result.

- Threaded holes. If necessary, clean with a tap or drill out and install thread inserts. Refer to "Thread Repair" in this section.

Measure

1. Six mounting hole bosses.
   - Hold a gage plate flat against the crankshaft flange.
   - Place dial indicator stem on the transmission mounting bolt hole boss and set indicator to 0.
   - Record the readings obtained on the remaining transmission mounting bolt hole bosses. Measurements should not vary more than 0.203 mm (0.008 inch).
   - If the readings vary more than 0.203 mm (0.008 inch), recheck crankshaft flange run-out. If the run-out is excessive, replace the crankshaft.
2. Crankshaft flange run-out. Refer to "Crankshaft" in this section.
3. Cylinder bore for wear, taper, out-of-round and ridging using J 8087.
   - If the bore is worn beyond limits, it may be re-bored, honed and fitted with oversize pistons. The smallest available oversize should be selected. Refer to "Piston Fitting" in this section.

Important

- Leave sufficient material to allow finish honing in conjunction with fitting the piston.
- If the bore is glazed but otherwise serviceable, break the glaze lightly with a hone and replace the piston rings.
- Make sure the honing stones are clean, sharp and straight. Move the hone slowly up and down to produce a 45 degree cross-hatch pattern. Clean bore thoroughly with soap and water. Dry and rub in clean engine oil, re-measure.

Important

- The following inspections as well as re-conditioning, if necessary, must be carried out with the main bearing caps installed and torqued to specification.
- Make sure main bearing caps are installed correctly, with the arrows pointing toward the front of the engine.

4. Camshaft and crankshaft bearing bores, with J 8087 for concentricity and alignment.
   - If outside specification, replace the block.
   - If an examination of the outside of the bearing inserts indicates minor high spots, they may be carefully removed.

Install or Connect

1. Oil gallery screw plugs.
2. New cooling jacket plugs.
   - Apply sealer, GM part number 1050026 or

equivalent to the plugs before installing them.
3. Pistons and connecting rods. Refer to "Piston and Connecting Rod Assembly" in this section.
4. Crankshaft. Refer to "Crankshaft" in this section.
5. Camshaft and bearings. Refer to "Camshaft" in this section.
6. Valve lifters. Refer to "Valve Lifters" in this section.
7. Cylinder heads. Refer to "Cylinder Head" in this section.
8. Engine. Refer to "Engine Assembly" in this section.

REAR MAIN BEARING UPPER OIL SEAL

Figures 45 through 47

Tool Required:
J 21526 Rear Main Bearing Upper Oil Seal Packer

Remove or Disconnect

1. Oil pan. Refer to "Oil Pan" in this section.
2. Rear main bearing cap bolts.
3. Rear main bearing cap.

Install or Connect

1. Insert packing tool, part of J 21526, against one end of the seal in the cylinder block. Pack the old seal in until it is tight (Figure 45).
2. Repeat step 1 on the other side of the seal.
3. Measure the amount the seal was driven up into the block on one side and add approximately 2 mm (1/16 inch). With a single edge razor blade, cut this amount off of the old lower seal. The bearing cap can be used as a holding fixture.
4. Install packing guide, part of J 21526, onto one side of the cylinder block (Figure 46).
5. Using the packing tool, work the short piece of seal into the guide tool and pack into the cylinder block until the tool hits the built in stop (Figure 47).
   - A small amount of oil on the piece of seal may be helpful when packing into the cylinder block.
6. Remove guide tool.
7. Repeat steps 3 through 6 on the other side of the cylinder block.
8. New lower seal. Refer to "Rear Main Bearing Lower Oil Seal" in this section.

REAR MAIN BEARING LOWER OIL SEAL

Figures 48 and 49

Tool Required:
J 28693 Rear Main Bearing Oil Seal Installer

Remove or Disconnect

1. Oil pan. Refer to "Oil Pan" in this section.
2. Rear main bearing cap bolts.
3. Rear main bearing cap.

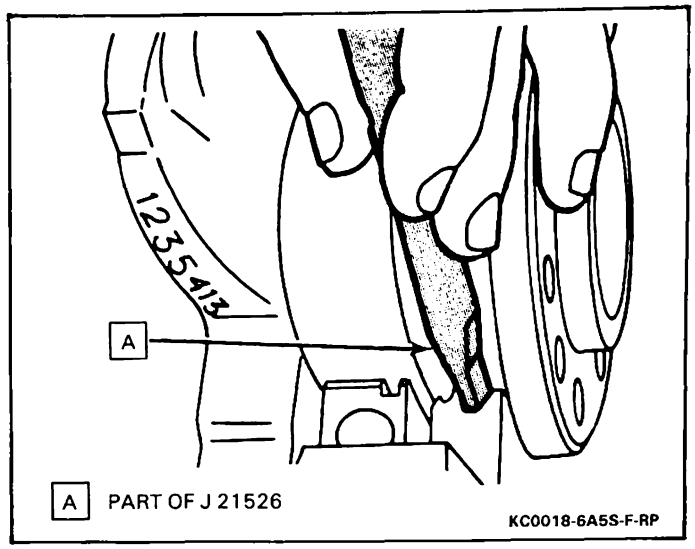

Figure 45 — Packing Seal into Block

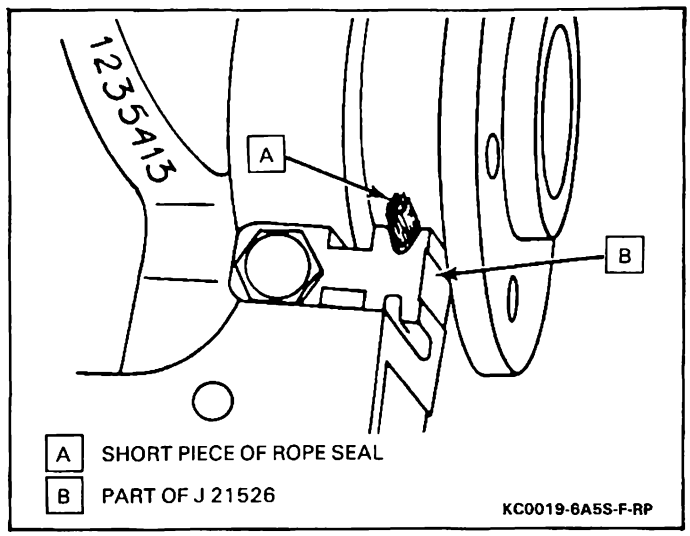

Figure 46 — Guide Tool Installed

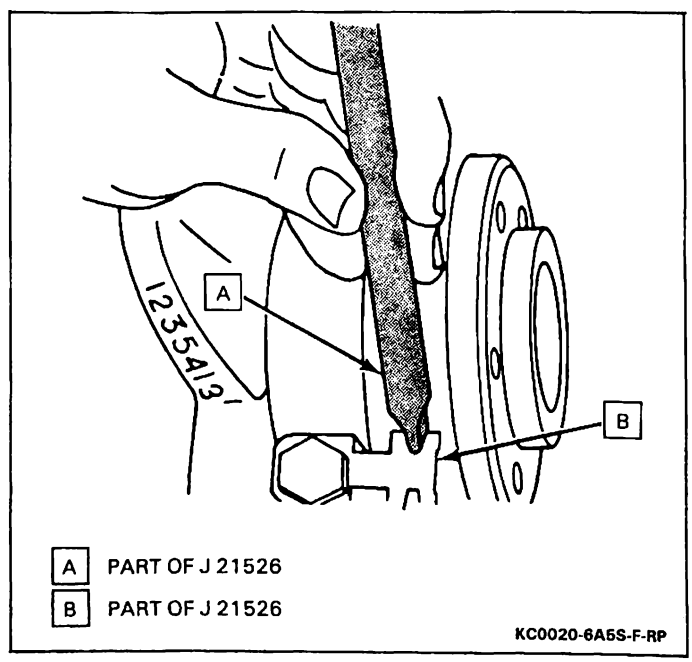

Figure 47 — Packing Short Pieces of Rope Seal into Guide Tool and Cylinder Block

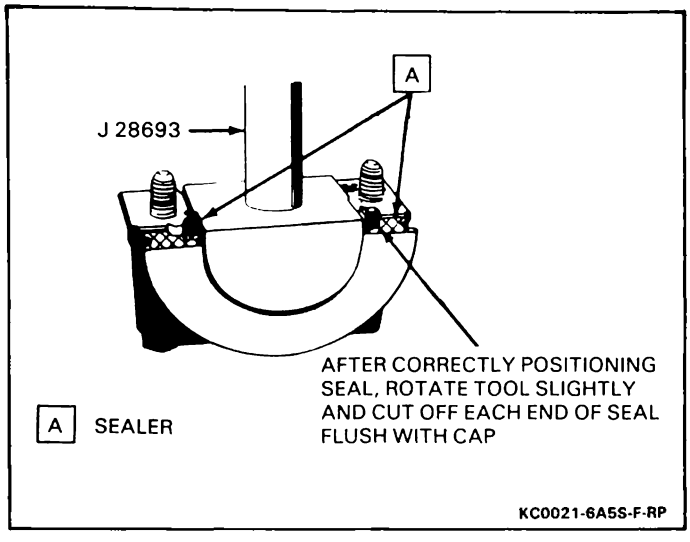

Figure 48 — Installing Rear Main Bearing Oil Seal in Cap

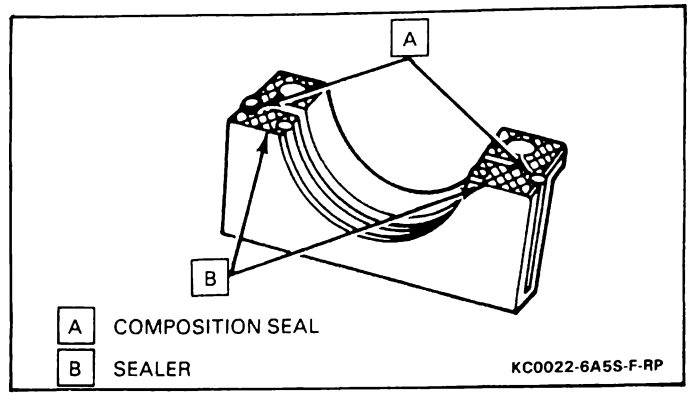

Figure 49 — Sealer Application on Rear Main Bearing Cap

Clean

- Seal material from rear main bearing cap groove and mating surface.

Install or Connect

Important

- Soak sealing strips in light oil or kerosene for five minutes before installing.

1. Apply sealer, GM part number 1052621, Loctite 414 or equivalent, to the seal groove.
2. Within one minute, insert seal into groove and roll into place using J 28693 (Figure 48).
3. Cut excess seal material with a sharp knife at the bearing cap parting line using J 28693 to hold the seal in place.
4. Apply a thin film of chassis grease to the seal.
5. Apply a thin film of sealer, GM part number 1052756 or equivalent, on the bearing cap mating surface (Figure 49).
   - Use sealer sparingly and keep out of bolt hole threads.
6. Place composition seals into grooves in the sides of the rear main bearing caps (Figure 49).
7. Rear main bearing cap.

NOTICE: See "Notice" on page 6A5-1 of this section.

8. Rear main bearing cap bolts.

Tighten

- Rear main bearing cap bolts alternately to 135 N·m (100 lb. ft.).

9. Oil pan. Refer to "Oil Pan" in this section.

FLYWHEEL

Figure 50

Remove or Disconnect

1. Transmission. Refer to TRANSMISSION GENERAL INFORMATION AND ON-VEHICLE SERVICE (SEC. 7A) of this supplement.
2. Flywheel bolts (51) and flywheel (50).

Inspect

- Flywheel (50) for cracks, excessive wear or broken teeth. Replace if necessary.
- Crankshaft and flywheel mating surfaces for burrs. Remove as required.

Install or Connect

1. Flywheel (50) to crankshaft.

NOTICE: See "Notice" on page 6A5-1 of this section.

2. Flywheel bolts (51).

Tighten

- Flywheel bolts (51) to 81 N·m (60 lb. ft.).

3. Transmission. Refer to TRANSMISSION GENERAL INFORMATION AND ON-VEHICLE SERVICE (SEC. 7A) of this supplement.

Adjust

- Flywheel (50) to correct any imbalance by clipping on balance weights (60).
  - Mark the flywheel in four locations, 90 degrees apart.

NOTICE: Make sure the balance weight clips are properly secured to avoid shifting at high engine speed.

- Install one balance weight (60) at one of the marked locations.
- Start engine and, with transmission in "NEUTRAL," note the vibration.
  - If vibration has increased, re-locate balance weight (60) 180 degrees from its present position.
  - If vibration has decreased, install an additional balance weight (60) next to the first one.
  - If no change is noticed, re-locate the balance weight (60) 90 degrees from its present location.
- Continue until vibration is reduced. Fine adjustments may be made by moving the balance weights (60) in small increments.

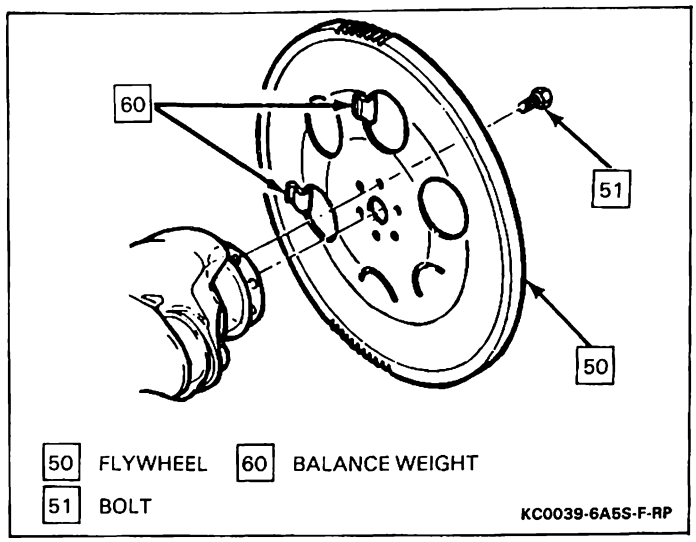

Figure 50 — Flywheel Balance Weight Location (Typical)

ENGINE MOUNTS

Figures 51 and 52

Remove or Disconnect

- Raise and suitably support vehicle as described in the 1989 Firebird Service Manual.
- Support weight of engine at forward edge of the oil pan.

1. Engine mount through bolt (82) and nut (83).
- Raise engine slightly.
2. Mount nuts (75), washers (74) and bolts (72).
3. Mount (73).
4. Bracket assembly bolts (76).
5. Bracket (77) and mounting plate (81) as an assembly.

Install or Connect

NOTICE: See "Notice" on page 6A5-1 of this section.

1. Bracket (77) and mounting plate (81) to the engine.
2. Bracket assembly bolts (76).

Tighten

- Bracket assembly bolts (76) to 45 N·m (33 lb. ft.).

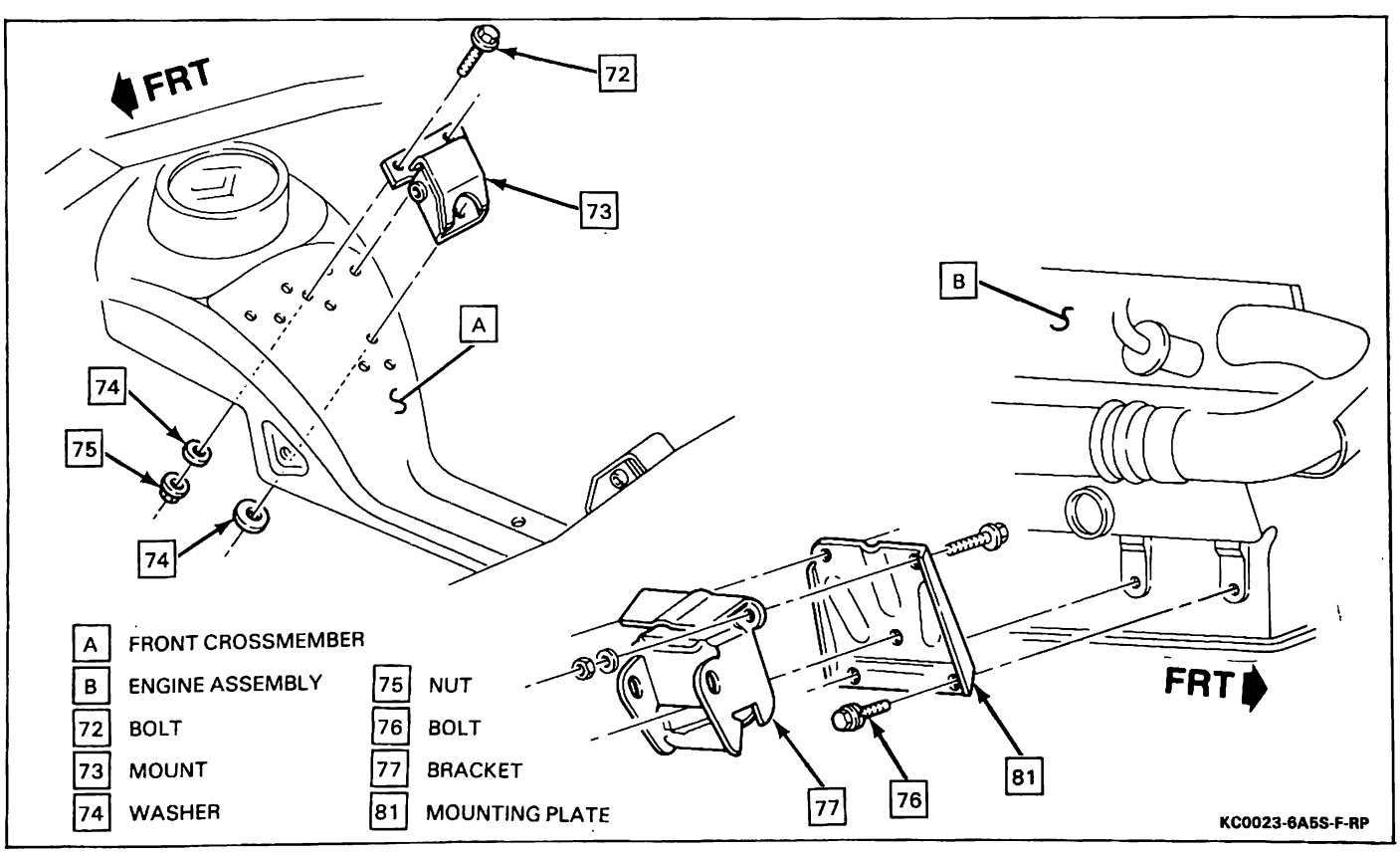

Figure 51 — Engine Mounts

3. Mount (73) to crossmember.
4. Mount bolts (72), washers (74) and nuts (75).

Tighten

- Nuts (75) to 41 N·m (30 lb. ft.).

- Lower engine.

5. Engine mount through bolt (82) and nut (83).

Tighten

- Nut (83) to 68 N·m (50 lb. ft.).

- Lower vehicle.

THREAD REPAIR

Damaged threads may be re-conditioned by drilling out, re-threading and installing a suitable thread insert. General purpose thread repair kits are available commercially.

CAUTION: Wear safety glasses to avoid eye damage.

1. Determine size, pitch and depth of damaged thread. If necessary, adjust stop collars on cutting tool and tap to the required depth.
   - Refer to the kit manufacturer's instructions regarding the size of drill and tap to be used.
2. Drill out damaged thread. Clean out chips.
3. Tap hole. Lubricate tap with light engine oil (except when tapping into aluminum). Clean the thread.
   - Avoid build-up of chips. Back out the tap every few turns and remove chips.
4. Thread the thread insert onto the mandrel of the installer. Engage the tang of the insert onto the end of the mandrel.
5. Lubricate the insert with light engine oil (except when installing in aluminum) and install.
   - When correctly installed, the insert should be flush to one turn below the surface.
6. If the tang of the insert does not break off when backing out the installer, break the tang off with a drift punch.

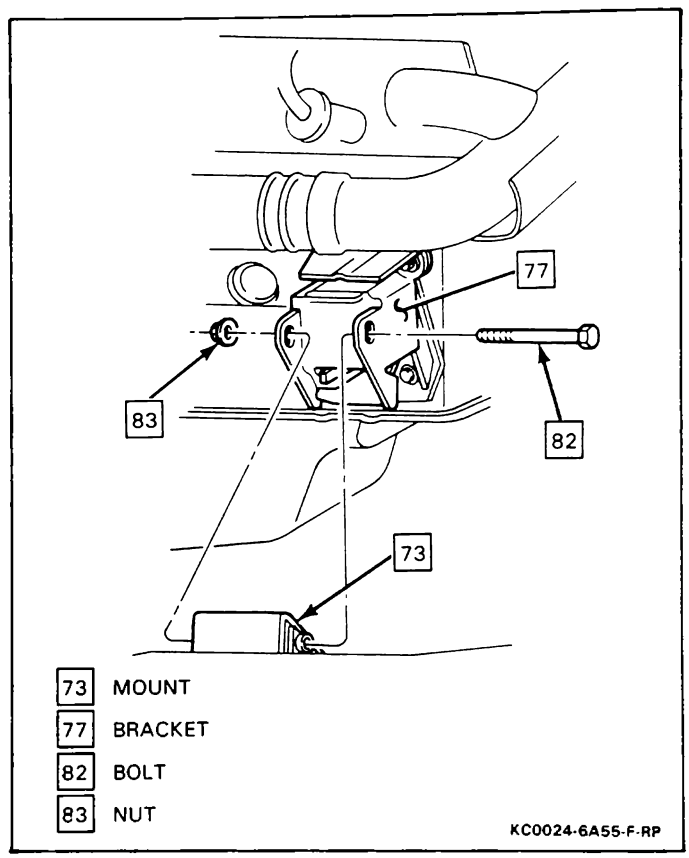

Figure 52 — Connecting Engine Mounts

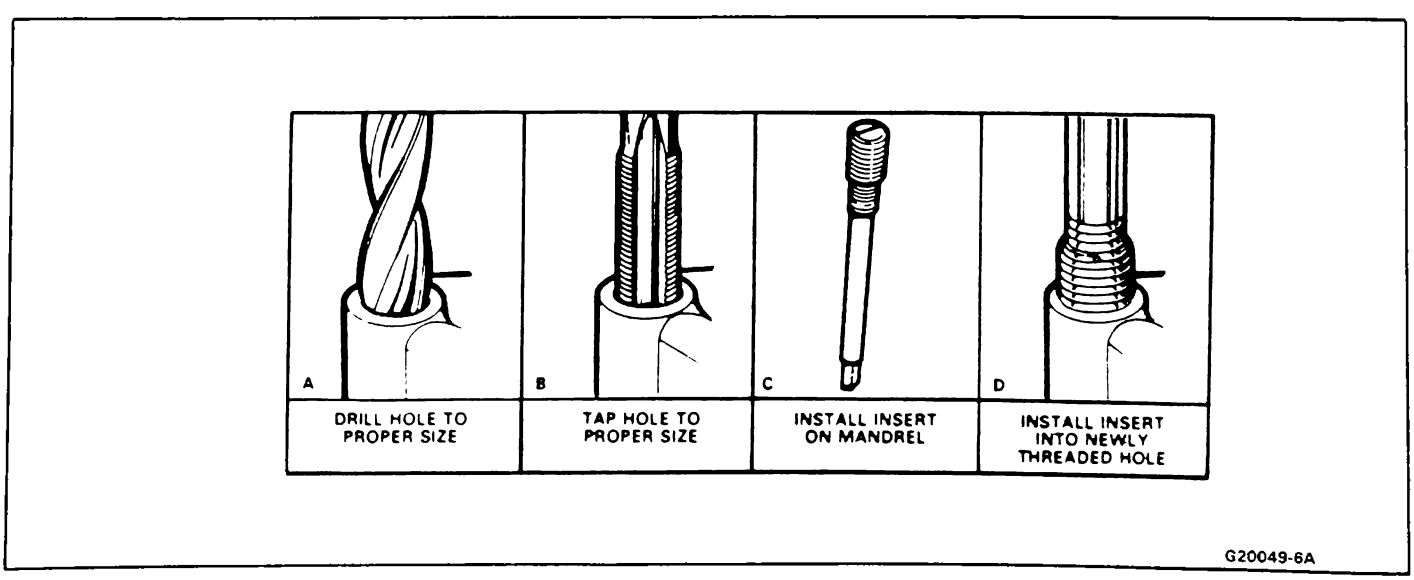

Figure 53 — Repairing Threaded Holes

SPECIFICATIONS

FASTENER TORQUE SPECIFICATIONS

Crankshaft Main Bearing Cap Bolt	135 N·m (100 lb. ft.)
Connecting Rod Cap Bolt	54 N·m (40 lb. ft.)
Cylinder Head-to-Cylinder Block Bolt	See Assembly Procedure
Balancer-to-Crankshaft Bolt	297 N·m (219 lb. ft.)
Flywheel-to-Crankshaft Bolt	81 N·m (60 lb. ft.)
Oil Pan Bolt	10 N·m (89 lb. in.)
Oil Pump Cover Bolt	16 N·m (12 lb. ft.)
Oil Pressure Relief Valve Plug	48 N·m (35 lb. ft.)
Oil Pump Pipe and Screen Bolt	11 N·m (97 lb. in.)
Front Cover Bolt	30 N·m (22 lb. ft.)
Intake Manifold Bolt	44 N·m (32 lb. ft.)
Exhaust Manifold Bolt	50 N·m (37 lb. ft.)
Exhaust Crossover Pipe Bolt	31 N·m (23 lb. ft.)
Exhaust Manifold-to-Turbocharger Nut	27 N·m (20 lb. ft.)
Turbocharger Exhaust Pipe Bolt	30 N·m (22 lb. ft.)
Exhaust Pipe Clamp-to-Exhaust Flex Coupling Nut	35 N·m (26 lb. ft.)
Camshaft Sprocket Bolt	42 N·m (31 lb. ft.)
Valve Cover Nut	18 N·m (13 lb. ft.)
Rocker Arm Pedestal Bolt	60 N·m (44 lb. ft.)
Timing Chain Damper Bolt	19 N·m (14 lb. ft.)
Intercooler Fan Bolt	29 N·m (21 lb. ft.)
Crankshaft Pulley-to-Hub Bolt	29 N·m (21 lb. ft.)
Crankshaft Hub-to-Balancer Bolt	35 N·m (26 lb. ft.)
Engine Mount Through Bolt Nut	68 N·m (50 lb. ft.)
Bracket-to-Engine Bolt	45 N·m (33 lb. ft.)
Engine Mount-to-Crossmember Nut	41 N·m (30 lb. ft.)
Bellhousing Bolt	47 N·m (35 lb. ft.)
Flywheel-to-Torque Converter Bolt	63 N·m (46 lb. ft.)
Torque Converter Cover Bolt	6 N·m (53 lb. in.)
Generator Brace Nut	50 N·m (37 lb. ft.)
Air Conditioning Compressor Brace Nut	15 N·m (11 lb. ft.)

SPARK PLUG TORQUE SPECIFICATION

Spark Plug	27 N·m (20 lb. ft.)

GENERAL ENGINE SPECIFICATIONS

Engine Type	90° V6
Displacement	3.8L (231 cu. in.)
Bore	96.5 mm (3.80″)
Stroke	86.4 mm (3.40″)
Fuel System Type	SFI
Compression Ratio	8.0 : 1
Cylinder Numbers - Front to Rear - Right Bank	2-4-6
Cylinder Numbers - Front to Rear - Left Bank	1-3-5
Firing Order	1-6-5-4-3-2

PISTON AND RING SPECIFICATIONS

Piston Clearance Limits	
Top Land	1.27 mm - 1.356 mm (0.050 in. - 0.0534 in.)
Skirt Top	0.168 mm - 0.234 mm (0.0066 in. - 0.0092 in.)
Skirt Bottom	0.0127 mm - 0.787 mm (0.0005 in. - 0.0031 in.)
Fitting Point (at Pin Centerline)	0.046 mm - 0.097 mm (0.0018 in. - 0.0038 in.)
Ring Groove Depth	
#1 - Compression Ring	4.547 mm - 4.801 mm (0.179 in. - 0.189 in.)
#2 - Compression Ring	4.597 mm - 4.801 mm (0.181 in. - 0.189 in.)
#3 - Oil Ring	4.521 mm - 4.724 mm (0.178 in. - 0.186 in.)
Ring Width	
#1 - Compression Ring	1.956 mm - 1.981 mm (0.077 in. - 0.078 in.)
#2 - Compression Ring	1.956 mm - 1.981 mm (0.077 in. - 0.078 in.)
#3 - Oil Ring	4.648 mm - 4.80 mm (0.183 in. - 0.189 in.)
Ring Gap	
#1 - Compression Ring	0.330 mm - 0.584 mm (0.013 in. - 0.023 in.)
#2 - Compression Ring	0.254 mm - 0.559 mm (0.010 in. - 0.022 in.)
#3 - Oil Ring	0.381 mm - 1.397 mm (0.015 in. - 0.055 in.)
Ring Side Clearance	
#1 - Compression Ring	0.05 mm - 0.10 mm (0.002 in. - 0.004 in.)
#2 - Compression Ring	0.05 mm - 0.10 mm (0.002 in. - 0.004 in.)
#3 - Oil Ring	0.0127 mm - 0.165 mm (0.0005 in. - 0.0065 in.)
Piston Pin Length	73.66 mm (2.900 in.)
Diameter of Pin	23.853 mm - 23.86 mm (0.9391 in. - 0.9394 in.)
Pin Clearance In Piston	0.0076 mm - 0.0229 mm (0.0003 in. - 0.0009 in.)
Pin Press Fit in Rod	0.0177 mm - 0.0432 mm (0.0007 in. - 0.0017 in.)
Pin Direction and Amount Offset in Piston	1.016 mm (0.040 in.) Major Thrust Side

CONNECTING ROD SPECIFICATIONS

Bearing Length	16.611 mm (0.654 in.)
Bearing Clearance (Limits)	0.0127 mm - 0.066 mm (0.0005 in. - 0.0026 in.)
End Play	0.0762 mm - 0.381 mm (0.003 in. - 0.015 in.)
Journal Diameter	57.117 mm - 57.137 mm (2.2487 in. - 2.2495 in.)
Bearing Run-Out	0.008 mm (0.0003 in.)
Bearing Taper	0.008 mm (0.0003 in.)
Bearing Side Clearance	0.10 mm - 0.38 mm (0.004 in. - 0.015 in.)

CRANKSHAFT SPECIFICATIONS

End Play at Thrust Bearing	0.0762 mm - 0.2794 mm (0.003 in. - 0.011 in.)
Main Bearing Journal Diameter	63.4873 mm (2.4995 in.)
Crankpin Journal Diameter	57.1169 mm - 57.1373 mm (2.2487 in. - 2.2495 in.)
Main Bearing Overall Length	
#1	21.9456 mm (0.864 in.)
#2	26.8478 mm (1.057 in.)
#3	21.9456 mm (0.864 in.)
#4	21.9456 mm (0.864 in.)
Main Bearing to Journal Clearance	0.0076 mm - 0.0457 mm (0.0003 in. - 0.0018 in.)
Run-Out	0.008 mm (0.0003 in.)
Taper	0.008 mm (0.0003 in.)

CAMSHAFT SPECIFICATIONS

Bearing Journal Diameter (All Journals)	45.339 - 45.364 mm (1.785 in. - 1.786 in.)
Journal Clearance in Bearings (#1)	0.0127 - 0.0635 mm (0.0005 in. - 0.0025 in.)
Journal Clearance in Bearings (#2, #3 and #4)	0.0127 - 0.0889 mm (0.0005 in. - 0.0035 in.)
Lift	
Intake	10.0 mm (0.397 in.)
Exhaust	10.0 mm (0.397 in.)

VALVE SYSTEM SPECIFICATIONS

Intake Valve	
Face Angle	45°
Margin (min.)	0.635 mm (0.025 in.)
Seat Angle	46°
Seat Width	1.57 mm (0.062 in.)
Seat Run-Out	0.005 mm (0.0002 in.)
Stem Clearance	0.038 mm-0.089 mm (0.0015 in.-0.0035 in.)
Exhaust Valve	
Face Angle	45°
Margin (min.)	0.635 mm (0.025 in.)
Seat Angle	46°
Seat Width	1.905 mm-2.642 mm (0.075 in.-0.104 in.)
Seat Run-Out	0.05 mm (0.002 in.)
Stem Clearance	0.038 mm-0.081 mm (0.0015 in.-0.0032 in.)
Valve Spring	
Free Length	51.56 mm (2.03 in.)
Load Closed	400 N ± 22 @ 43.87 mm (90 lb. ± 5 @ 1.727 in.)
Load Open	823 N ± 44 @ 34 mm (185 lb. ± 10 @ 1.34 in.)
Installed Height	43.10 mm-44.62 mm (1.697 in.-1.757in.)
Valve Lifter	
Diameter	21.3868 mm-21.4046 mm (0.8420 in.-0.8427 in.)
Crankcase Clearance	0.0203 mm-0.0635 mm (0.0008 in.-0.0025 in.)

OIL PUMP SPECIFICATIONS

Gear Lash	0.038 mm-0.075 mm (0.0015 in.-0.003 in.)
Gear Pocket	
Depth	22.04 mm-22.10 mm (0.868 in.-0.870 in.)
Diameter	42.40 mm-42.54 mm (1.670 in.-1.675 in.)
Length	22.15 mm-22.20 mm (0.872 in.-0.874 in.)
Gear Diameter	
Drive Gear	42.26 mm-42.32 mm (1.664 in.-1.666 in.)
Idler Gear	42.26 mm-42.32 mm (1.664 in.-1.666 in.)
Side Clearance	
Drive Gear	0.080 mm-0.13 mm (0.003 in.-0.005 in.)
Idler Gear	0.080 mm-0.13 mm (0.003 in.-0.005 in.)
End Clearance	0.050 mm-0.15 mm (0.002 in.-0.006 in.)
Valve-to-Bore Clearance	0.102 mm-0.203 mm (0.004 in.-0.008 in.)

LUBRICATION SYSTEM SPECIFICATIONS

Type of Lubrication	
Main Bearings	Pressure
Connecting Rods	Pressure
Piston Pins	Splash
Camshaft Bearing	Pressure
Timing Chain	Splash and Nozzle
Cylinder Walls	Splash
Oil Pump Type	Gear Driven
Normal Oil Pressure	255 kPa (37 psi) at 2400 RPM
Oil Pressure Sending Unit	Electrical
Oil Intake	Stationary
Oil Filter System	Full Flow
Filter Type	Throw-Away Element and Can
Crankcase Capacity*	4.73L (5 Qts.)

*with new oil filter

SPECIAL TOOLS

1 J 8037

2 J 3049

3 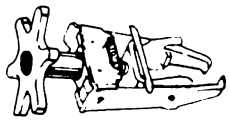 J 26513-A

4 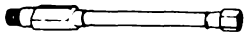 J 22794

5 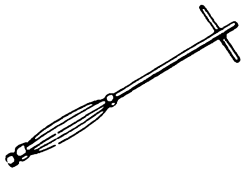 J 8101

6 J 24086-A

7 J 33049

8 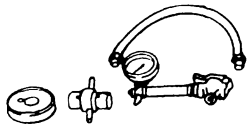 J 25087

9 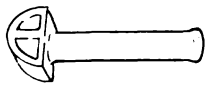 J 28693

10 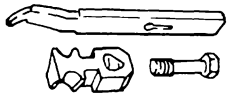 J 21526

11 J 5790-B

12 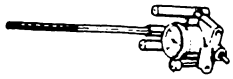 J 8087

13 J 5830-02

1 PISTON RING COMPRESSOR
2 HYDRAULIC VALVE LIFTER REMOVER
3 VALVE SPRING COMPRESSOR
4 SPARK PLUG PORT ADAPTER
5 VALVE GUIDE CLEANER
6 PISTON PIN REMOVER/INSTALLER
7 CAMSHAFT BEARING REMOVER/INSTALLER
8 OIL PRESSURE TEST KIT
9 REAR MAIN BEARING OIL SEAL INSTALLER
10 REAR MAIN BEARING UPPER OIL SEAL PACKER
11 HYDRAULIC VALVE LIFTER TESTER
12 CYLINDER BORE CHECKING GAGE
13 VALVE GUIDE REAMER SET (INCLUDES J 5830, -1, -2, -3, -4, -5)

KC0025-6A5S-F-RP

SECTION 6B

COOLING AND RADIATOR

The following "Notice" applies to one or more steps in the assembly procedure of components in this portion of the manual as indicated at appropriate locations by the terminology: "NOTICE: See "Notice" on page 6B-1 of this section."

NOTICE: When fasteners are removed, always reinstall them at the same location from which they were removed. If a fastener needs to be replaced, use the correct part number fastener for that application. If the correct part number fastener is not available, a fastener of equal size and strength (or stronger) may be used. Fasteners that are not reused, and those requiring thread locking compound will be called out. The correct torque value must be used when installing fasteners that require it. If the above conditions are not followed, parts or system damage could result.

CONTENTS

On-Vehicle Service 6B-1
Thermostat 6B-1
Coolant Pump Pulley 6B-1
Coolant Pump 6B-3
Serpentine Drive Belt 6B-3
Drive Belt Tensioner 6B-4
Specifications 6B-5

ON-VEHICLE SERVICE

THERMOSTAT

Figures 1 and 2

Remove or Disconnect

1. Negative (–) battery cable.
- Drain the radiator to below the level of the thermostat.
- Loosen clamp (7) on air cleaner duct (5) at turbocharger inlet.
2. Air cleaner duct (5) at turbocharger.
- Loosen clamp (6) at radiator inlet hose (1).
3. Radiator inlet hose (1) from thermostat housing (12).
4. Nut (9) and radiator inlet hose support bracket (8).
5. Bolt (10).
6. Clamp (11).
7. Thermostat housing (12) and O-ring (13).
   - Discard the O-ring (13).
8. Thermostat (14).

Install or Connect

NOTICE: See "Notice" on page 6B-1 of this section.

1. Thermostat (14).
2. New O-ring (13) to the thermostat housing (12).
3. Thermostat housing (12) and O-ring (13).
4. Clamp (11).
5. Bolt (10).

Tighten

- Bolt (10) to 18 N·m (13 lb. ft.).

6. Radiator inlet hose support bracket (8) and nut (9).

Tighten

- Nut (9) to 27 N·m (20 lb. ft.).

7. Radiator inlet hose (1) to thermostat housing (12).

Tighten

- Clamp (6) to 2.2 N·m (19 lb. in.).

8. Air cleaner duct (5) to turbocharger.

Tighten

- Clamp (7) to 1.4 N·m (12 lb. in.).

9. Negative (–) battery cable.
- Fill the radiator as described in the 1989 Firebird Service Manual.

COOLANT PUMP PULLEY

Figures 1 and 3

Remove or Disconnect

1. Negative (–) battery cable.
2. Clamps (7) and intermediate hose (2).
   - Loosen clamps (7).
   - Remove intermediate hose (2).
3. Clamps (7) and air cleaner duct (5).
   - Loosen clamps (7).
   - Remove air cleaner duct (5).
4. Serpentine drive belt. Refer to "Serpentine Drive Belt" in this section.
5. Intercooler and duct. Refer to TURBOCHARGER (SEC. 6J) of this supplement.
6. Bolts (23).
7. Pump pulley (22) from coolant pump (17).

Install or Connect

NOTICE: See "Notice" on page 6B-1 of this section for steps 2, 5 and 6.

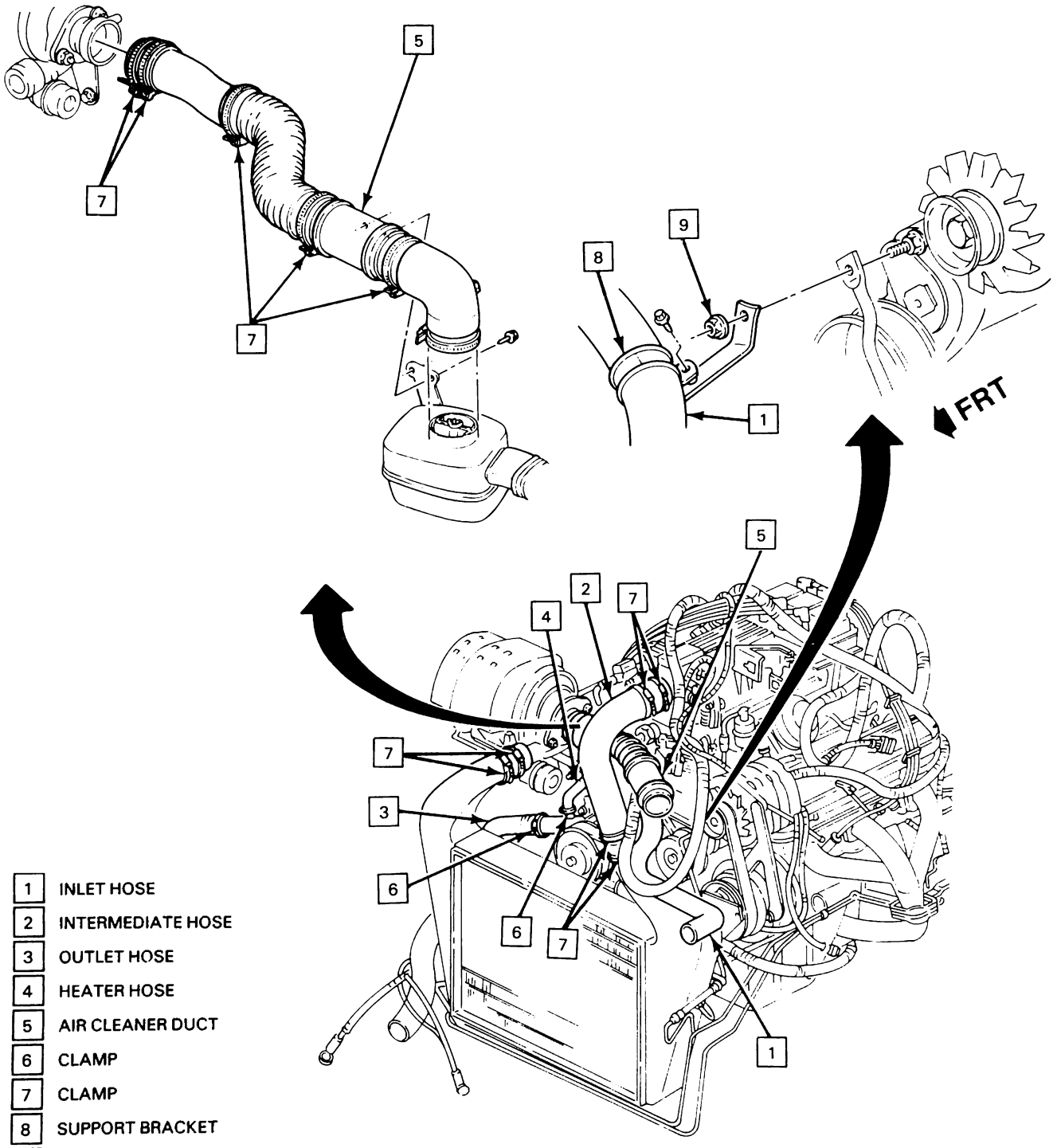

1 INLET HOSE
2 INTERMEDIATE HOSE
3 OUTLET HOSE
4 HEATER HOSE
5 AIR CLEANER DUCT
6 CLAMP
7 CLAMP
8 SUPPORT BRACKET
9 NUT

KC0001-6BS-F-RP

Figure 1 — Engine Hoses and Ducts

1. Pump pulley (22) to coolant pump (17).
2. Bolts (23).

Tighten

- Bolts (23) to 10 N·m (89 lb. in.).

3. Intercooler and duct. Refer to TURBOCHARGER (SEC. 6J) of this supplement.
4. Serpentine drive belt. Refer to "Serpentine Drive Belt" in this section.
5. Air cleaner duct (5) and clamp (7).

Tighten

- Clamp (7) to 1.4 N·m (12 lb. in.).

6. Intermediate hose (2) and clamp (7).

Tighten

- Clamp (7) to 1.4 N·m (12 lb. in.).

7. Negative (–) battery cable.

COOLANT PUMP

Figures 1 and 3

Remove or Disconnect

1. Negative (–) battery cable.
- Drain the radiator as described in the 1989 Firebird Service manual.
2. Coolant pump pulley. Refer to "Coolant Pump Pulley" in this section.
3. Clamp (6) and radiator outlet hose (3) from the coolant pump (17).
4. Clamp (6) and heater hose (4) from the coolant pump (17).
5. Bolts (15, 16 and 21).
6. Coolant pump (17) and gasket (18) from the front cover (20).

Clean

- Gasket mating surfaces of coolant pump (17) and engine front cover (20).

Install or Connect

NOTICE: See "Notice" on page 6B-1 of this section.

1. Gasket (18).
2. Coolant pump (17) and bolts (15, 16 and 21) to the front cover (20) using the coolant pump dowel pins (19).

Tighten

- Bolts (15 and 21) to 30 N·m (22 lb. ft.).
- Bolts (16) to 13 N·m (115 lb. in.).

3. Heater hose (4) and clamp (6) to the coolant pump (17).

Tighten

- Clamp (6) to 1.7 N·m (15 lb. in.).

4. Radiator outlet hose (3) and clamp (6) to the coolant pump (17).

Tighten

- Clamp (6) to 1.7 N·m (15 lb. in.).

5. Coolant pump pulley. Refer to "Coolant Pump Pulley" in this section.
6. Negative (-) battery cable.
- Fill the radiator as described in the 1989 Firebird Service Manual.

Inspect

- For leaks.

SERPENTINE DRIVE BELT

Figure 4

A single (serpentine) drive belt is used to drive all engine mounted accessories. All driven accessories are rigidly mounted and drive belt tension is maintained by a spring loaded belt tensioner.

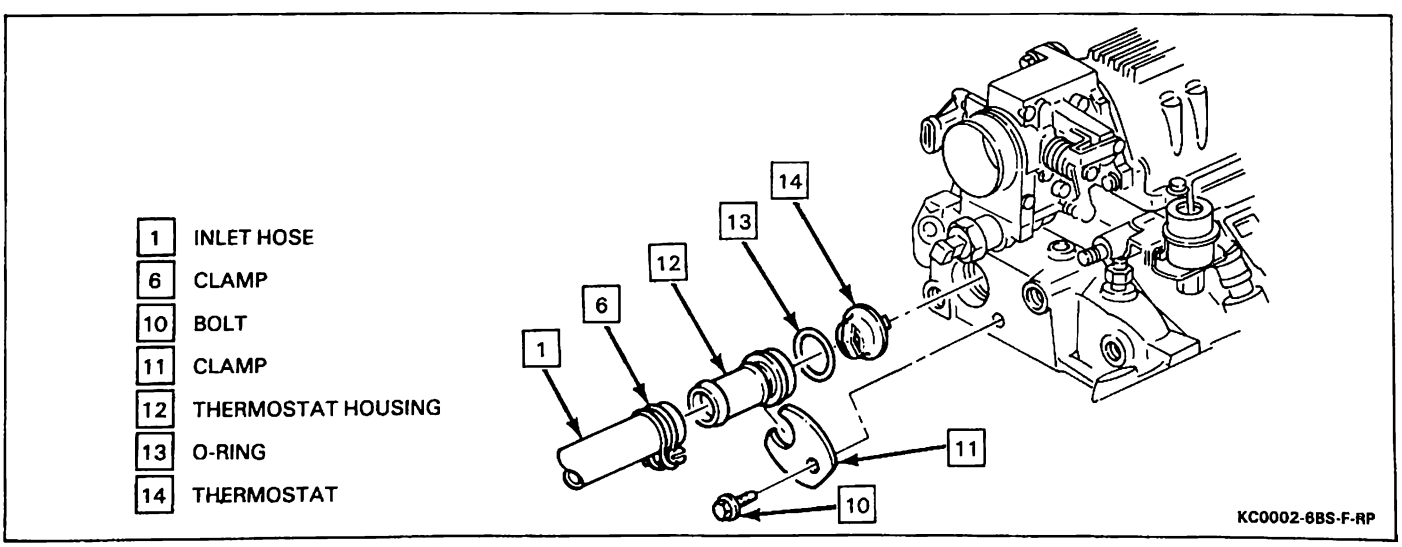

Figure 2 — Coolant Thermostat

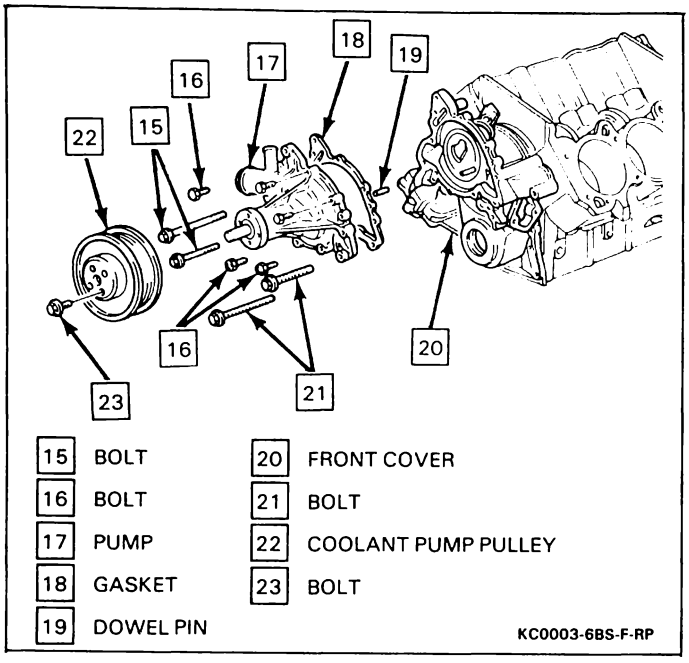

Figure 3 — Engine Coolant Pump

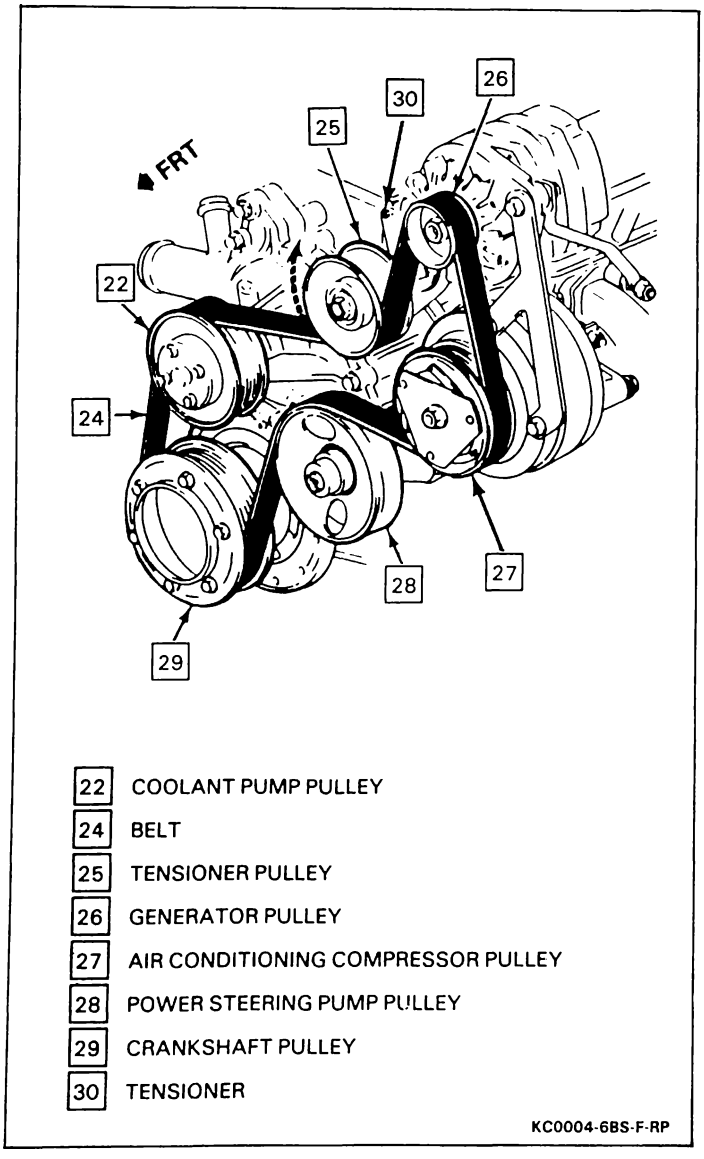

Figure 4 — Drive Belt Routing

Remove or Disconnect

- Rotate tensioner (30) up in the direction of the arrow as shown in Figure 4.

1. Serpentine drive belt (24) from all pulleys except crankshaft pulley (29).

- Raise and suitably support vehicle as described in the 1989 Firebird Service Manual.

2. Serpentine drive belt (24) from crankshaft pulley (29).

Install or Connect

1. Serpentine drive belt (24) to crankshaft pulley (29).

- Lower vehicle.
- Rotate tensioner (30) up in the direction of the arrow as shown in Figure 4.

2. Serpentine drive belt (24) according to the routing shown in Figure 4.

DRIVE BELT TENSIONER

Figure 5

Remove or Disconnect

1. Serpentine drive belt. Refer to "Serpentine Drive Belt" in this section.
2. Generator. Refer to CHARGING SYSTEM (SEC. 6D3) of this supplement.
3. Bolts (32) and tensioner (30).

Install or Connect

NOTICE: See "Notice" on page 6B-1 of this section.

1. Tensioner (30) and bolts (32).

Tighten

- Bolts (32) to 50 N·m (37 lb. ft.).

2. Generator. Refer to CHARGING SYSTEM (SEC. 6D3) of this supplement.
3. Serpentine drive belt. Refer to "Serpentine Drive Belt" in this section.

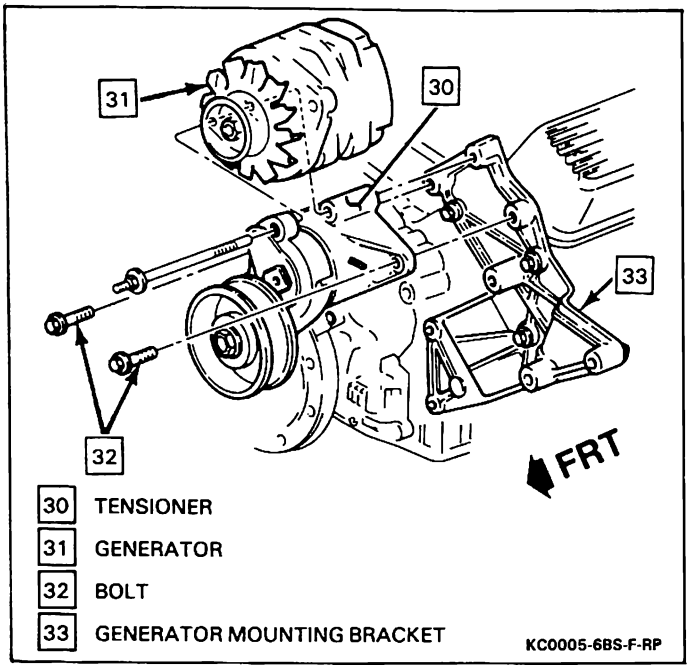

Figure 5 — Drive Belt Tensioner

SPECIFICATIONS

FASTENER TORQUE SPECIFICATIONS

Thermostat Clamp Bolt	18 N·m (13 lb. ft.)
Radiator Hose Clamps	2.2 N·m (19 lb. in.)
Radiator Hose Support Bracket Nut	27 N·m (20 lb. ft.)
Coolant Pump Long Bolts	30 N·m (22 lb. ft.)
Coolant Pump Short Bolts	13 N·m (115 lb. in.)
By-pass Hose Clamp	1.7 N·m (15 lb. in.)
Heater Hose Clamp	1.7 N·m (15 lb. in.)
Coolant Pump Pulley Bolts	10 N·m (89 lb. in.)
Air Cleaner Duct Clamp	1.4 N·m (12 lb. in.)
Intermediate Hose Clamp	1.4 N·m (12 lb. in.)
Tensioner Mounting Bolts	50 N·m (37 lb. ft.)

SECTION 6C

ENGINE FUEL

CONTENTS

GENERAL DESCRIPTION 6C-1
FUEL SYSTEM 6C-2
Port Fuel Injection (PFI) 6C-2
FUEL FILTERS 6C-2
In-line Filters 6C-2
In-tank Fuel Strainers 6C-2
FUEL TANK 6C-2
Fuel Tank Filler Neck 6C-2
Fuel Filler Cap 6C-2
FUEL PUMP 6C-2
Fuel Tank Insulators 6C-2
In-tank Electric Fuel Pump 6C-2
Fuel Pump Relay 6C-2
FUEL LEVEL SENDER UNIT 6C-3
FUEL AND VAPOR PIPES 6C-3
Fuel Pipes and Hoses 6C-3
ACCELERATOR CONTROLS 6C-3
ON-VEHICLE SERVICE 6C-4
FUEL SYSTEM INSPECTION 6C-4
ALCOHOL-IN-FUEL 6C-4
Testing Procedure 6C-4
FUEL SYSTEM PRESSURE RELIEF 6C-5
Pressure Relief (PFI) 6C-5
FUEL SYSTEM PRESSURE TEST 6C-5
Pressure Test (PFI) 6C-5
FUEL PUMP FLOW TEST 6C-5
FUEL FILTER REPLACEMENT 6C-5
In-line Filter Replacement 6C-5
In-tank Fuel Strainers 6C-5
DRAINING FUEL TANK 6C-5
FUEL TANK REPLACEMENT 6C-6
Fuel Tank Removal 6C-6
Fuel Tank Installation 6C-7
FUEL SYSTEM CLEANING 6C-7
FUEL TANK PURGING PROCEDURE 6C-8
FUEL TANK LEAK TEST PROCEDURE 6C-9
FUEL PUMP REPLACEMENT 6C-9
In Tank Electric Fuel Pump 6C-9
Electric Fuel Pump Removal 6C-9
Electric Fuel Pump Installation 6C-9
Fuel Pump Relay 6C-9
FUEL LEVEL SENDER UNIT 6C-10
Fuel Level Sender Unit Diagnosis 6C-10
FUEL AND VAPOR PIPE REPLACEMENT ... 6C-10
Fuel and Vapor Pipe Repair 6C-11
ACCELERATOR CONTROLS 6C-11
Accelerator Control Cable 6C-11
Accelerator Pedal 6C-12

All new General Motors vehicles are certified by the United States Environmental Protection Agency as conforming to the requirements of the regulations for the control of air pollution from new motor vehicles. This certification is contingent on certain adjustments being set to factory standards. In most cases, these adjustment points either have been permanently sealed and/or made inaccessible to prevent indiscriminate or routine adjustment in the field. For this reason, the factory procedure for temporarily removing plugs, caps, etc., for purposes of servicing the product must be strictly followed, and wherever practicable, returned to the original intent of the design.

GENERAL DESCRIPTION

When working on the fuel system, there are several things to keep in mind.

- **Any time the fuel system is being worked on, disconnect the negative battery cable (except for those tests where battery voltage is required.)**
- Always keep a dry chemical (Class B) fire extinguisher near the work area.
- Always use a backup wrench when loosening or tightening a threaded coupling.
- Torque on threaded couplings is 30 N·m (22 lb. ft.).
- Pipe connections on all fuel injection systems require the use of an O-ring.
- Replace all pipe with the same pipe and fittings that were removed. Clean and inspect O-rings. Replace where required.
- All fuel pipe must meet the GM Specification 124-M or its equivalent.
- Standard flared pipe is used on all engines.
- All fuel hose must meet the GM Specification 6163-M or its equivalent.
- Do not replace fuel pipe with fuel hose.
- On fuel injection systems, always relieve the line pressure before servicing any fuel system components.
- Do not do any repairs on the fuel system until you have read the copy and checked the illustrations relating to that repair.
- Adhere to all Notices and Cautions.

Unleaded gasoline must be used with all gasoline engines for proper emission control system operation. Using unleaded gasoline will also decrease spark plug fouling and extend engine oil life. Leaded gasoline can damage the emission control system, and its use can result in loss of emission warranty coverage.

All cars with gasoline engines are equipped with an Evaporative Emission System that minimizes the escape of fuel vapors to the atmosphere. Information on this system is found in Section "6E3".

FUEL SYSTEM

The basic fuel supply system in automotive vehicles consists of the fuel tank for receiving and storing fuel, the fuel pump for moving the fuel from the tank to the engine, the fuel line for carrying fuel to the engine, and the engine fuel delivery system. Fuel Metering is accomplished by Port Fuel Injection.

Port Fuel Injection (PFI)

See Section "6E3" for PFI information. Fuel system diagnosis is in Section "6E3", CHART A-7.

FUEL FILTERS

Fuel filters fall into two categories: in-line filters and in-tank fuel strainers. See Figures 3-4.

In-Line Filters

The in-line filter is located in the fuel feed line, attached to the left frame rail, at the rear of the vehicle. See Figure 4.

In-Tank Fuel Strainers

A woven plastic strainer is attached to the lower end of the fuel pick-up pipe in the fuel tank. The two main functions of the in-tank strainer are to filter contaminants and to wick fuel. The strainer fabric repels air and vapor, and its wicking action allows fuel to be picked up in the tank in areas other than at the pump inlet.

FUEL TANK

The fuel tank is located under the rear of the vehicle. A vertical baffle is installed in the tank to support the filler tube and to serve as a slosh baffle. The tank is held in place by two metal straps that are attached to the underbody. Isolation pads are used on top of the tank to reduce rattles and other annoying noises.

Fuel Tank Filler Neck

To prevent refueling with leaded gasoline, the fuel filler neck on gasoline engine cars has a built-in restrictor and deflector.

Fuel Filler Cap (Figure 1)

The fuel tank filler neck is equipped with a screw-type cap. The threaded part of the cap requires several turns counter clockwise to remove. A built-in torque-limiting device prevents over tightening. To install, turn the cap clockwise until a clicking noise is heard. This signals that the correct torque has been reached and the cap is fully seated.

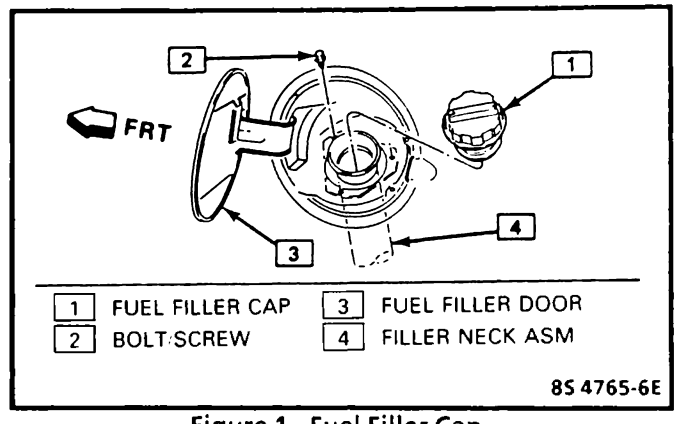

Figure 1 - Fuel Filler Cap

NOTICE: If a fuel filler cap requires replacement, use only a cap with the same features. Failure to use the correct cap can result in a serious malfunction of the system.

FUEL PUMP

Fuel Tank Insulators (Figure 5)

Insulator pads are used on top of the tank to reduce rattles and other annoying noises.

In-Tank Electric Fuel Pump

The electric fuel pump used on gasoline engines is attached to the fuel level sending unit in the fuel tank See Figure 7.

The fuel pump used on the turbo engine is a high flow, high pressure pump that develops 224-300 kPa (32-44 psi) at idle with normal operating temperatures.

Fuel Pump Relay (Figure 2)

Electric fuel pump operation is controlled by a fuel pump relay

When the ignition switch is turned to "RUN" position, the fuel pump relay activates the electric fuel pump for 1.5 to 2.0 seconds to prime the injector

If the ECM does not receive reference pulses after this time, the ECM signals the relay to turn "OFF" the fuel pump. The relay will once again activate the fuel pump when the ECM receives reference pulses. See Section "6E3", "Fuel Metering System" and the electrical section of the manual for further description and operation of the fuel pump relay.

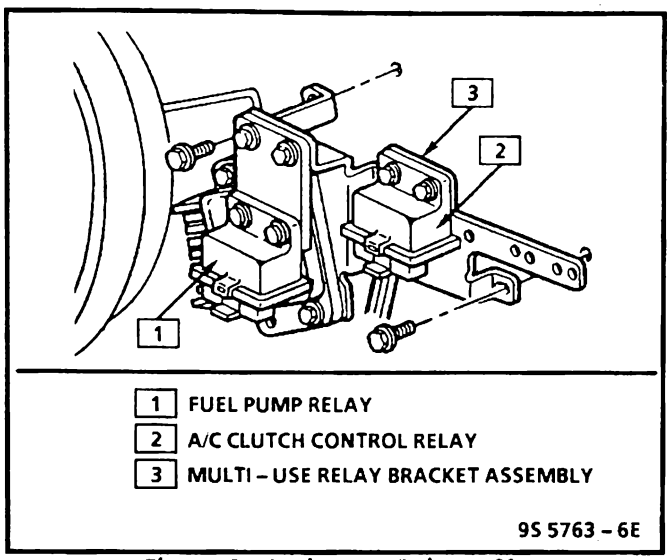

Figure 2 - Fuel Pump Relay LC2

FUEL LEVEL SENDER UNIT

The fuel level sender unit is located inside the fuel tank. It is attached to the top of the fuel tank with a cam lock ring. An O-ring gasket is used between the tank and sending unit.

The fuel level sender unit consists of the following major components: an electric fuel pump, fuel strainer, fuel level sensor, fuel tube,return tube, canister vent tube (see Section "6E"), pressure control valve, wiring above and below cover, and necessary brackets.

Fuel is pumped to the engine at a specified flow and pressure via the fuel pump in the engine compartment, or by the in-tank fuel pump which is mounted to the sender assembly. Excess fuel is returned to the fuel tank via the return line. The in-tank fuel pump delivers a constant flow of gasoline to the engine even during low fuel conditions and aggressive vehicle maneuvers, as long as the strainer is partially covered with fuel.

The fuel level sensor consists of a float, wire float arm and a sensor. Fuel is sensed by the position of the float arm, and a signal is sent to the gage or electronic display in the vehicle instrument cluster.

All electrical connections to the chassis electrical system are made to a wiring harness on top of the fuel level sender cover. (See Section "8A".)

A woven plastic fuel strainer is located on the lower end of the fuel pick-up pipe.

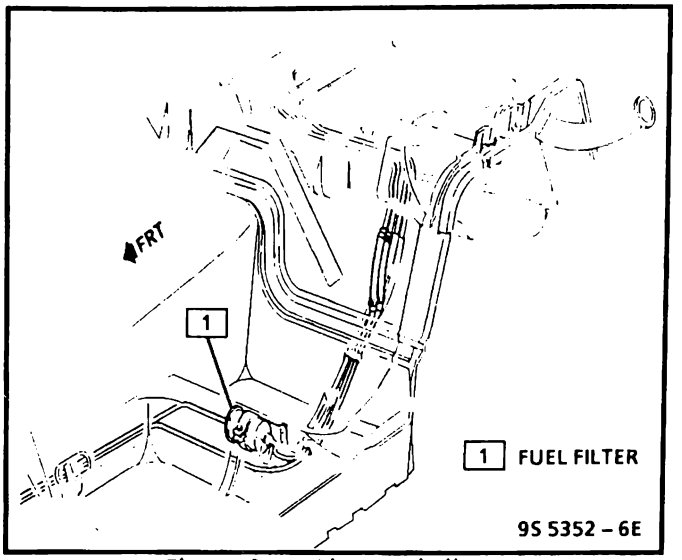

Figure 3 - In-Line Fuel Filter

FUEL AND VAPOR PIPES

The fuel feed and return pipes extend from the fuel level sending unit to the engine compartment. The pipes are secured to the underbody with clip and screw assemblies. Both fuel feed and return pipes must be properly routed and retained, and should be inspected for leaks, kinks, or dents. If evidence of dirt is found during disassembly, the pipe should be disconnected and blown out. Check the fuel strainer on the fuel level sending unit for damage or sediment.

The vapor pipe extends from the fuel level sender to the canister. It does not follow the same route as the fuel feed pipe.

If replacement of a fuel feed pipe or vapor pipe is required, use brazed seamless steel tubing meeting GM Specification 124M, or equivalent.

Under no circumstances should copper or aluminum tubing be used to replace steel tubing. Those materials will not withstand normal vehicle vibrations and corrosion.

Fuel Pipes and Hoses

Because the fuel pipes in a fuel injection system are under high pressure, they require special consideration for service. See "On-Vehicle Service."

ACCELERATOR CONTROLS

The accelerator control system is cable type. There are no linkage adjustments. Therefore, the specific cable for each application must be used. Only the specific replacement part will work.

When work has been performed on accelerator controls, always make sure that all components are installed correctly and that linkage and cables are not rubbing or binding in any manner. The throttle should operate freely without bind between full closed and wide open throttle.

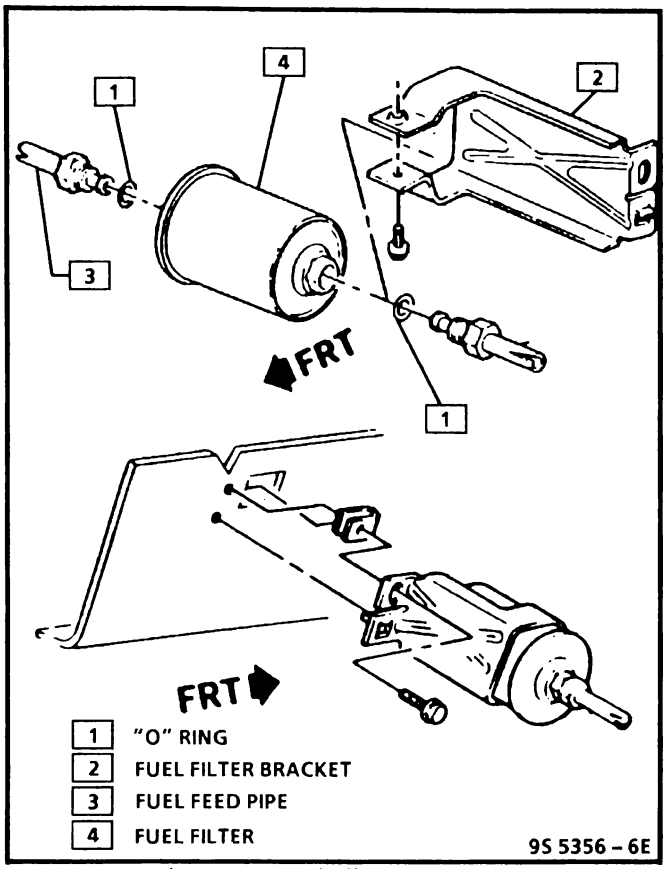

Figure 4 - Fuel Filter Location

ON-VEHICLE SERVICE

FUEL SYSTEM INSPECTION

The fuel tank, cap and lines should be inspected for road damage that could cause leakage. Inspect fuel cap for correct sealing and indications of physical damage. Replace any damaged or malfunctioning parts.

If the fuel system is suspected of delivering an improper amount of fuel, it should be inspected and tested in the vehicle as follows:

1. Make certain that there is fuel in the tank.
2. With the engine running, inspect for leaks at all fuel feed pipe and hose connections from fuel tank to injectors. Tighten any loose connections. Inspect all hoses for flattening or kinks which would restrict the flow of fuel.

Important

Refer to Section "6E3" for additional diagnosis of engine fuel system.

ALCOHOL-IN-FUEL

Alcohol-in-fuel can be detrimental to fuel system components and may cause driveability problems such as hesitation, lack of power, stall, no start, etc. The problems may be due to fuel system corrosion and subsequent fuel filter plugging, deterioration of rubber components such as the accelerator pumps, and/or air-fuel mixture leaning effects.

Various types and concentrations of alcohols are used in commercial gasoline. Some alcohols are more detrimental to fuel system components than others. If an excessive amount of alcohol in the fuel is suspected as the cause of a driveability condition, the following procedure may be used to detect the presence of alcohol in the fuel. In this procedure, water is used to extract the alcohol from the fuel.

Testing Procedure

The fuel sample should be drawn from the bottom of the tank so that any water present in the tank will be detected. The sample should be bright and clear. If the sample appears cloudy, or contaminated with water (as indicated by a water layer at the bottom of the sample), this procedure should not be used, and the fuel system should be cleaned (see "Fuel System Cleaning").

1. Using a 100 ml cylinder with 1 ml graduation marks, fill with fuel to the 90 ml mark.
2. Add 10 ml of water to bring the total fluid volume to 100 ml and install a stopper.
3. Shake vigorously for 10 to 15 seconds.
4. Carefully loosen the stopper to release pressure.
5. Close the stopper and shake vigorously again for 10 to 15 seconds.
6. Put the graduated cylinder on a level surface for approximately 5 minutes to allow adequate liquid separation.

If alcohol is present in the fuel, the volume of the lower layer (which would now contain both alcohol and water) will be greater than 10 ml. For example, if the volume of the lower layer is increased to 15 ml, it will indicate at least 5 percent alcohol in fuel. The actual amount of alcohol may be somewhat greater because this procedure does not extract all of the alcohol from the fuel.

FUEL SYSTEM PRESSURE RELIEF

CAUTION:
- **To reduce the risk of fire and personal injury, it is necessary to relieve the fuel system pressure before servicing fuel system components.**
- **A small amount of fuel may be released when servicing fuel lines or connections. In order to reduce the chance of personal injury, cover fuel line fittings with a shop towel before disconnecting, to catch any fuel that may leak out. Place the towel in an approved container when disconnect is completed.**

Pressure Relief - PFI

1. Loosen fuel filler cap to relieve tank pressure.
2. Connect gage J 34730-1 or equivalent to fuel pressure valve. Wrap a shop towel around fitting while connecting gage to avoid spillage.
3. Install bleed hose into an approved container and open valve to bleed system pressure. Fuel connections are now safe for servicing.
4. Drain any fuel remaining in gage into an approved container.

FUEL SYSTEM PRESSURE TEST

This test must be performed when diagnosing the fuel system.

Pressure Test - PFI

- See Section "6E3-C2", "Fuel Control System, Diagnosis" for fuel system pressure test. To perform this test, use the procedure on the page opposite CHART A-7.

FUEL PUMP FLOW TEST

1. Connect a hose from the fuel feed line at the engine to a suitable unbreakable container.
2. Apply battery voltage to the fuel pump test terminal (terminal "G" of ALDL.)
3. Fuel pump should supply 1/2 pint or more in 15 seconds.
4. If flow is below minimum, check for fuel restrictions.
5. Refer to Section "6E3" "Fuel Pump Relay Circuit" CHART A-5 or Section "8A", for further diagnosis of the electrical pump.

FUEL FILTER REPLACEMENT

In-Line Filter Replacement (Figure 4)

1. Raise car on hoist.
2. Disconnect fuel lines from filter. To reduce the risk of fire and personal injury when the fuel line is disconnected, cover the fuel line with a shop cloth to collect the fuel, and then place the cloth in an approved container.
3. Disconnect filter from car.
4. Loosely install new filter.
5. Using new O-ring seals, install the fuel lines into the filter. Use back-up wrench to prevent filter,O-ring, or fuel line damage. Torque line fittings to 30 N·m (22 lb. ft.).
6. Secure filter to car.
7. Lower car. Start engine and inspect for leaks.

In-Tank Fuel Strainers

The life of the fuel strainer is generally considered to be that of the fuel pump. The strainer is self-cleaning and normally requires no maintenance. Fuel stoppage at this point indicates that the fuel tank contains an abnormal amount of sediment or water. The tank should therefore be thoroughly cleaned. (See "Fuel System Cleaning".) If the strainer is plugged, replace it with a new strainer.

Make certain that the strainer does not get trapped under the fuel level sender float arm, and use extreme care to avoid damaging the strainer when servicing the sender unit.

DRAINING FUEL TANK

1. Disconnect the negative battery cable. Place a dry chemical (Class B) fire extinguisher near the work area.
2. Use a hand operated pump device to drain as much fuel through the filler tube as possible.
3. If a hand operated pump device cannot be used to complete the draining process, use a siphon at the main (not return) fuel pipe at the fuel level sender unit.
4. Reinstall any removed hoses, lines and cap.

CAUTION: **Never drain or store gasoline in an open container due to the possibility of fire or explosion.**

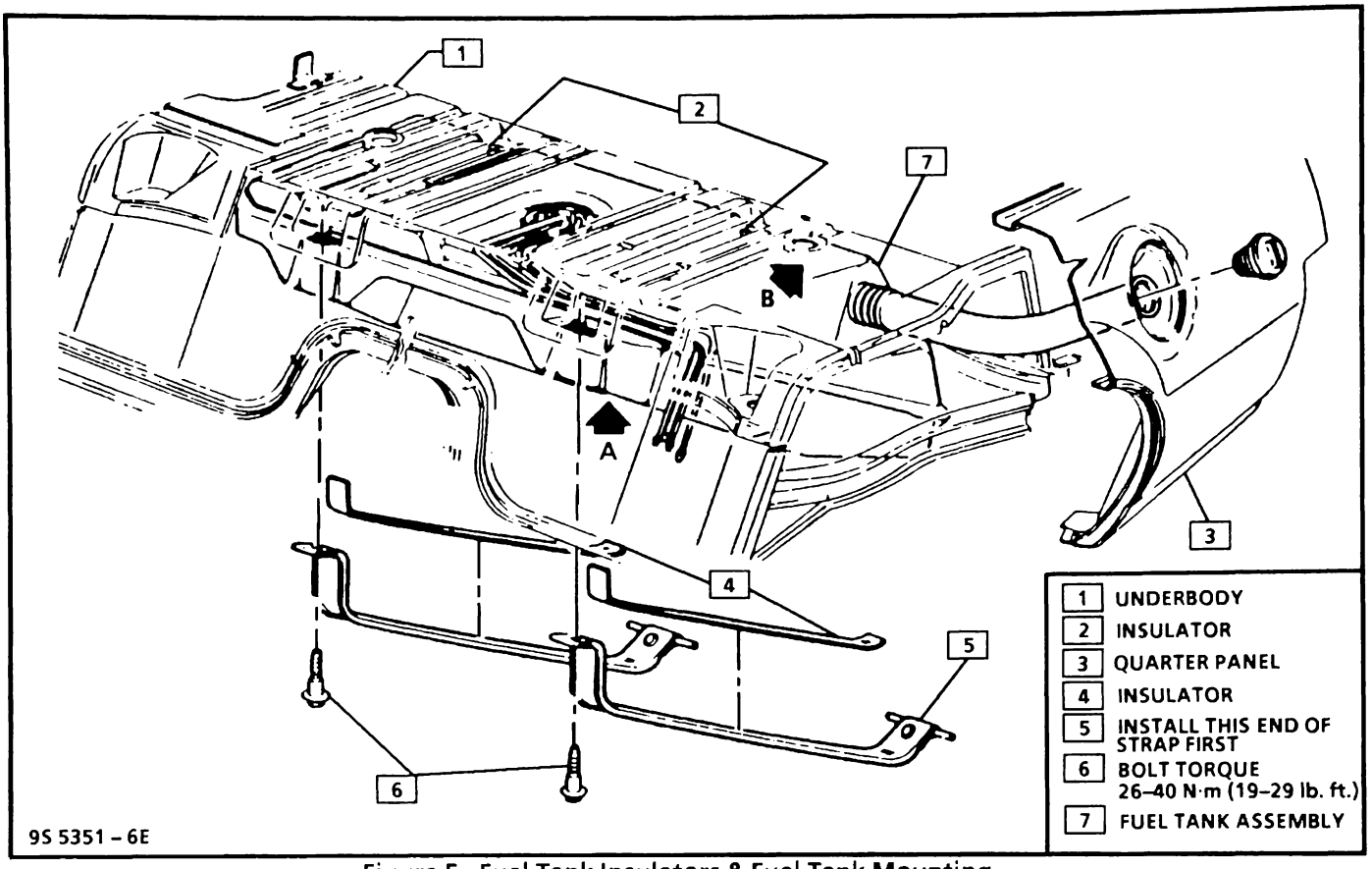

Figure 5 - Fuel Tank Insulators & Fuel Tank Mounting

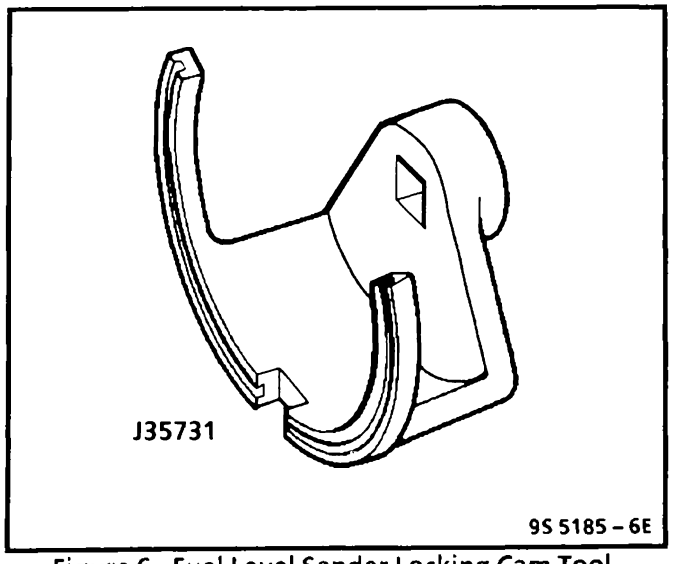

Figure 6 - Fuel Level Sender Locking Cam Tool

FUEL TANK REPLACEMENT (Figure 5)

CAUTION: **To help avoid personal injury when a vehicle is on a hoist, provide additional support for the vehicle on the opposite end from which components are being removed. This will reduce the possibility of the vehicle falling off the hoist.**

Fuel Tank Removal

Install or Disconnect

1. Remove all fuel, see "Draining Fuel Tank".
2. Gas cap
3. Filler neck shield
4. Raise & lower vehicle
5. Right & lift rear tires
6. Track bar
7. Track bar brace
8. Install jackstands & support axle
9. Lower shock mount nuts - bolt
10. Exhaust hanger - rear (bolt to pipe only)
11. Exhaust pipe to connector bolts
12. Brake line cables from "S" clips (left & right)
13. Brake cable retainer on right frame rail.
14. Flexable brake cable retainer & package clamp from left frame rail
15. Stabilizer bar links
16. Lower axle (do not damage flex line)
17. Left & right rear springs
18. Exhaust system (pipe & muffler)
19. Muffler shield
20. Exhaust pipe shield
21. Fuel lines & wires
22. Fuel tank
23. Sending unit with fuel pump (Inc: R & R retainer, O-ring, wiring & tape).

Fuel Tank Installation

Install or Connect

1. Reverse removal procedure.
2. Always replace O-ring gasket when sending unit has been removed. See Figure 8.

NOTICE: Care should be taken not to fold over or twist the strainer when installing the sending unit as this will restrict fuel flow. Also, assure that strainer does not block full travel of float arm.

3. When reinstalling fuel tank, be sure to reinstall insulator pads on top of the tank to reduce rattle and other annoying noises. Peel off release paper on rear insulators and apply to tank or underbody as shown in Figure 5. Apply tape to front insulator as shown, using one 330 mm or two 130 mm pieces of tape.
4. Tighten front fuel tank retaining strap bolts to 35 N·m (26 lb. ft.). Tighten rear strap bolts to 11 N·m (8 lb. ft.).

NOTICE: To keep tank flange froum grounding out against tank strap bracket, install left hand tank strap before right hand tank strap.

5. Inspect for leaks.

FUEL SYSTEM CLEANING

CAUTION: **This procedure will NOT remove all fuel vapor. Do not attempt any repair on tank or filler neck where heat or flame is required, as an explosion resulting in personal injury could occur.**

If the fuel is contaminated, or if there is foreign material in the tank, the tank can usually be cleaned. If the tank is rusted internally, it should be replaced.

1. Disconnect negative battery cable.
2. Disconnect engine harness connector at HEI distributor.
3. Place a dry chemical (Class B) fire extinguisher near the work area.
4. Relieve fuel system pressure (See "Fuel System Pressure Relief").
5. Drain fuel tank (see "Draining Fuel Tank").
6. Remove fuel tank (see "Fuel Tank Removal").
7. Remove external fuel filter and inspect for contamination. If filter is plugged, replace it.
8. Locate tank away from heat, flame or other source of ignition. Remove fuel level sending unit and inspect condition of strainer. If strainer is contaminated, install a new strainer upon reassembly.

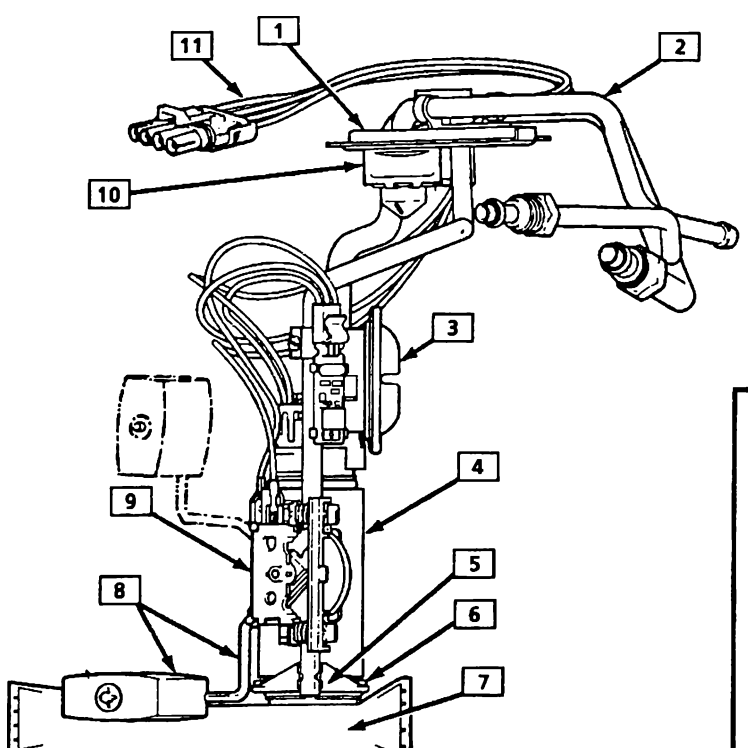

1	FUEL LEVEL SENDER COVER
2	FUEL TUBES
3	PULSATOR
4	ROLLERVANE FUEL PUMP
5	PUMP SUPPORT BRACKET
6	INSULATOR
7	STRAINER
8	FLOAT AND FLOAT ARM
9	FUEL LEVEL SENSOR ASSEMBLY
10	PRESSURE CONTROL/ROLLOVER VALVE
11	WIRING HARNESS

8S 4760 – 6E

Figure 7 - In-Tank Electric Fuel Pump and Fuel Level Sender Assembly (Typical)

9. Complete draining of tank by rocking it and allowing fuel to run out of fuel level sender tank opening.
10. Purge fuel tank, see "Fuel Tank Purging" procedure.
11. Disconnect fuel feed pipe at in-line filter and use air pressure to clean fuel line. Apply air pressure in the opposite direction fuel normally flows through the line. Disconnect return line and apply air pressure to clean line.
12. Use low air pressure to clean pipes on fuel level sender assembly.
13. Install new strainer on fuel level sending unit, if required.
14. Install fuel level sender unit with new O-ring gasket into tank, and install fuel tank. Connect fuel level sender harness to body harness. The fuel level sender harness must be routed below the sender unit fuel pipes. Connect all fuel lines except feed line at engine. Install fuel filter. (See "Fuel Tank Replacement" for proper procedure.)

NOTICE: Care should be taken not to fold over or twist strainer when installing sending unit as this will restrict fuel flow. Also, assure that strainer does not block full travel of float arm.

15. Connect a hose to the fuel feed line at the engine, and insert the other end of the hose into an empty one gallon fuel can.
16. Connect battery cable.
17. Put 2.3 liters (six gallons) of clean fuel into fuel tank and apply 12 volts to terminal "G" of ALDL to operate electric fuel pump. Pump two quarts of fuel into fuel can. This will purge fuel pump and lines.
18. Remove hose and connect fuel line at engine. Connect engine harness connector to HEI distributor.
19. Start engine.
20. Check all connections for leaks. Tighten all hose clamps.

FUEL TANK PURGING PROCEDURE

The following procedure is used before repairing the fuel tank.

1. Remove fuel level sender unit and drain all remaining fuel from tank.
2. Visually inspect interior cavity of tank. If any fuel is evident, drain again.
3. Move tank to flushing area (wash rack).
4. Fill tank completely with tap water, agitate vigorously and drain.

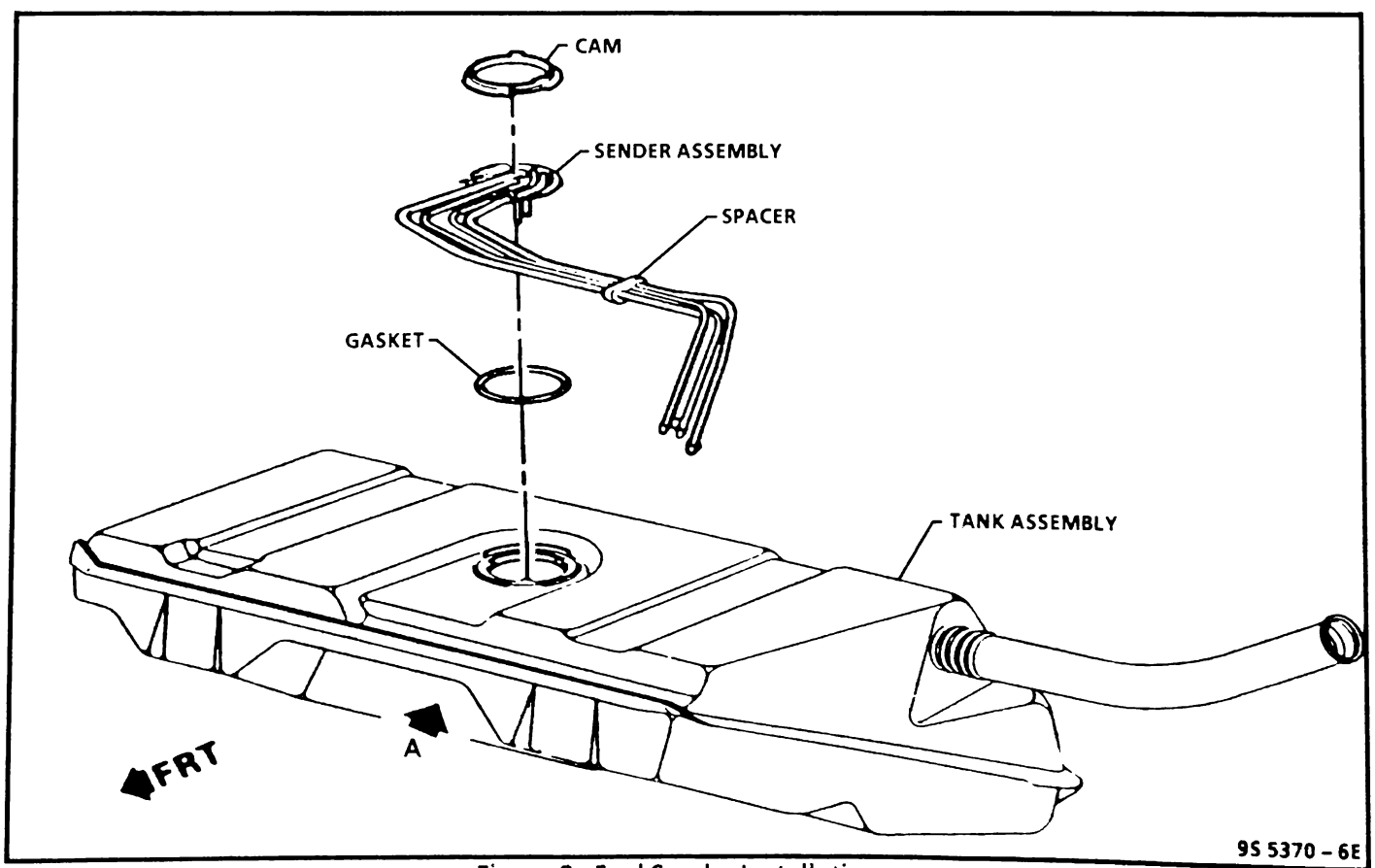

Figure 8 - Fuel Sender Installation

5. Add gasoline emulsifying agent to the tank. Refill tank with water, and agitate mixture for 10 minutes. Drain tank completely.
   For correct gasoline emulsifying agent to water ratio, refer to the manufacturer's specifications. Use an available emulsifying agent such as "Product-Sol No. 913" or equivalent.
6. When tank is empty, refill to overflowing with water. Completely flush out remaining mixture, and empty tank.
7. If available, an explosion meter should be used to check for negative reading.
8. Perform required service work.

FUEL TANK LEAK TEST PROCEDURE

NOTICE: Before removing the fuel tank for a suspected leak, make sure that it is not one of the fuel hoses leaking onto the tank. If fuel is leaking from the tank, replace tank.

1. Plug all outlets from tank as follows:
   a. Install filler neck, upper neck assembly, and filler cap.
   b. Install fuel level sender unit with gasket and plug fuel feed and return lines.
   c. Install short piece of fuel line on fuel level sender vent tube.
2. Remove fuel tank (See "Fuel Tank Removal").
3. Apply a small amount of air pressure to tank through vent tube (approximately 7 to 10 kPa or 1 to 1-1/2 lbs. of pressure). When air can be heard escaping from filler neck cap, pinch the fuel line hose to retain pressure.

NOTICE: More than 1-1/2 lbs. of pressure will permanently damage the tank.

4. Test tank for leaks with soap solution or by submersion. If a leak is noted, replace tank.

FUEL PUMP REPLACEMENT

In-Tank Electric Fuel Pump

Electrical Diagnosis

For electrical diagnosis of the fuel pump, see Section "6E" and Section "8A".

Electric Fuel Pump Removal

1. Relieve fuel system pressure. (See "Fuel System Pressure Relief".)
2. Disconnect negative battery cable.
3. Raise car on hoist.

CAUTION: **To help avoid personal injury when a vehicle is on a hoist, provide additional support for the vehicle on the opposite end from which components are being removed. This will reduce the possibility of the vehicle falling off the hoist.**

4. Remove the fuel tank. (See "Fuel Tank Removal".)
5. Remove fuel level sending unit and pump assembly by turning cam lock ring counter clockwise. Lift assembly from fuel tank.
6. Remove fuel pump from fuel level sending unit. Pull fuel pump up into attaching hose or pulsator while pulling outward away from bottom support. Take care to prevent damage to rubber insulator and strainer during removal. After pump assembly is clear of bottom support, pull pump assembly out of rubber connector or pulsator for removal.

Electric Fuel Pump Installation

1. Inspect fuel pump attaching hose for any signs of deterioration. Replace as necessary. Also check rubber sound insulator at bottom of pump, and replace if required.
2. Push fuel pump assembly into attaching hose.
3. Install fuel level sending unit and pump assembly into tank assembly. Use new O-ring during reassembly. See Figure 8.

NOTICE: Care should be taken not to fold over or twist the strainer when installing the sending unit as this will restrict fuel flow. Also, assure that strainer does not block full travel of float arm.

4. Install cam lock over assembly and lock by turning clockwise.
5. Reverse fuel tank removal procedure to finish installing.

Fuel Pump Relay

The fuel pump relay is located in the engine compartment, attached to the multi-use bracket on the upper dash panel extension. See Figure 2.

See the electrical Section "8A" or "6E3-C2" section of the manual for further description and operation of the fuel pump relay.

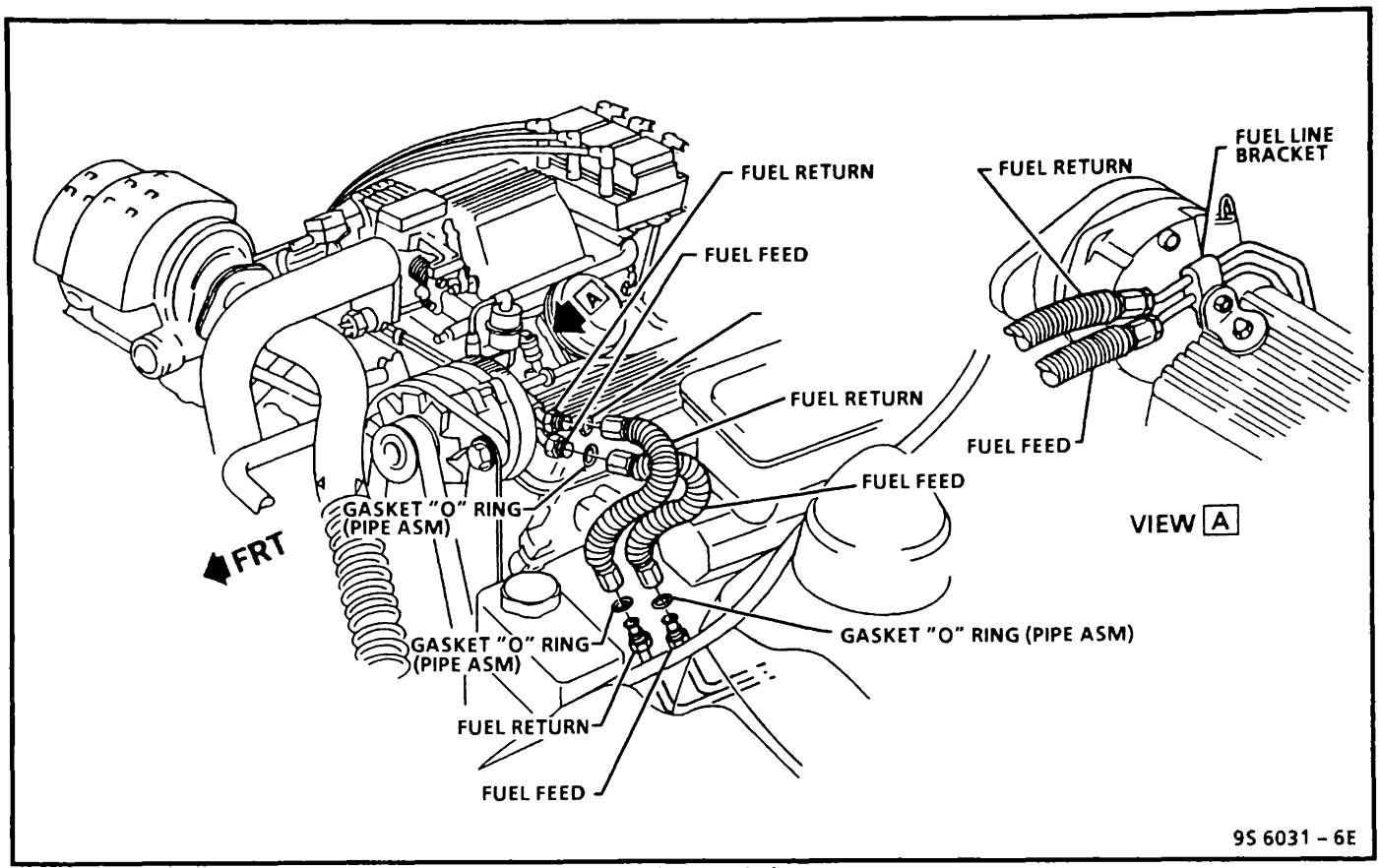

Figure 9 - Engine Fuel Lines LC2

FUEL LEVEL SENDER UNIT (Figure 7)

Figure 7 shows a typical Fuel Level Sender unit.

When a fuel level sending unit is removed always make sure to install the O-ring gasket and any power or ground leads that were removed.

See "Fuel Pump Replacement" for sender unit replacement.

Fuel Level Sender Unit Diagnosis

For checking and testing of the fuel level sender unit see Section "8A".

FUEL AND VAPOR PIPE REPLACEMENT (Figure 12)

CAUTION: **A small amount of fuel may be released when servicing fuel lines or connections. In order to reduce the chance of personal injury, cover fuel line fittings with a shop towel before disconnecting, to catch any fuel that may leak out. Place the towel in an approved container when disconnect is completed.**

When replacing fuel feed and return pipes, always replace them with original equipment or parts that meet the GM specifications for those parts. The replacement pipe must have the same type of fittings as the original pipes to ensure the integrity of the connection.

NOTICE: Do not use copper or aluminum tubing to replace steel tubing. Only tubing meeting the 124M specification or its equivalent is capable of meeting all pressure and vibration characteristics necessary to ensure the durability standard required.

Many of the feed and return pipes use screw couplings with O-rings. Any time these fittings are loosened to service or to replace components, ensure that:

- A backup wrench is used to loosen and tighten the fittings.
- Check all O-rings at these locations (if applicable) for cuts or any damage and replace if necessary.
- Use correct torque when tightening these fittings.
- Inspect all pipes for leaks, kinks or dents.
- Pipes must be properly secured to the frame to prevent chafing. A minimum of 6 mm (1/4") clearance must be maintained around a pipe to prevent contact and chafing.
- Fuel feed and return pipes are secured to the underbody with clamps and screw assemblies.
- Follow the same routing as the original pipe.
- Fuel pipes must not contact the fuel tank or underbody at any point.

Fuel and Vapor Pipe Repair

When it is impractical to replace an entire fuel line to repair localized damage, use the following procedure:

- When rubber hose is used to replace pipe, use only reinforced fuel-resistant hose which is identified with the word "Fluoroelastomer" on the hose. Inside hose diameter must match outside pipe diameter.
- Do not use rubber hose within 100 mm (4") of any part of the exhaust system, or within 254 mm (10") of the catalytic converter.
- In repairable areas, cut a piece of fuel hose 100 mm (4") longer than portion of line removed. If more than a 6 inch length of pipe is removed, use a combination of steel pipe and hose so that hose lengths will not be more than 254 mm (10").
- Follow the same routing as the original pipe.
- Cut ends of pipe, remaining on car, square with a tube cutter. Using the first step of a double flaring tool, form a bead on the end of each pipe section. If pipe is too corroded to withstand the beading operation without damage, the pipe should be replaced. If a new section of pipe is used, form a bead on both ends of it also.
- Use screw-type hose clamp NO. #2494772, or equivalent. Slide clamps onto pipe and push hose 51 mm (2") onto each portion of fuel pipe. Tighten clamps on each side of repair.
- Pipes must be properly secured to the frame to prevent chafing.

ACCELERATOR CONTROLS (Figure 10)

The accelerator control system is cable type. There are no linkage adjustments, and therefore the specific cable for each application must be used. Only the specific replacement part will work.

When work has been performed on accelerator controls, always make sure that all components are installed as removed and that linkage and cables are not rubbing or binding in any manner.

Whenever disconnecting or replacing parts, lubricate pivot points with Accelerator Linkage Lubricant 1052541 or equivalent. Check for correctopening and closing positions by operating accelerator pedal. Also check for poor carpet fit under the accelerator pedal.

Throttle should operate freely without bind between full closed and wide open throttle.

Accelerator Control Cable

When performing service on the accelerator control cable, observe the following:

- Retainer must be installed with tangs secured over head of stud.
- Conduit fitting at both ends of cable must have locking tangs expanded and locked in attaching holes.

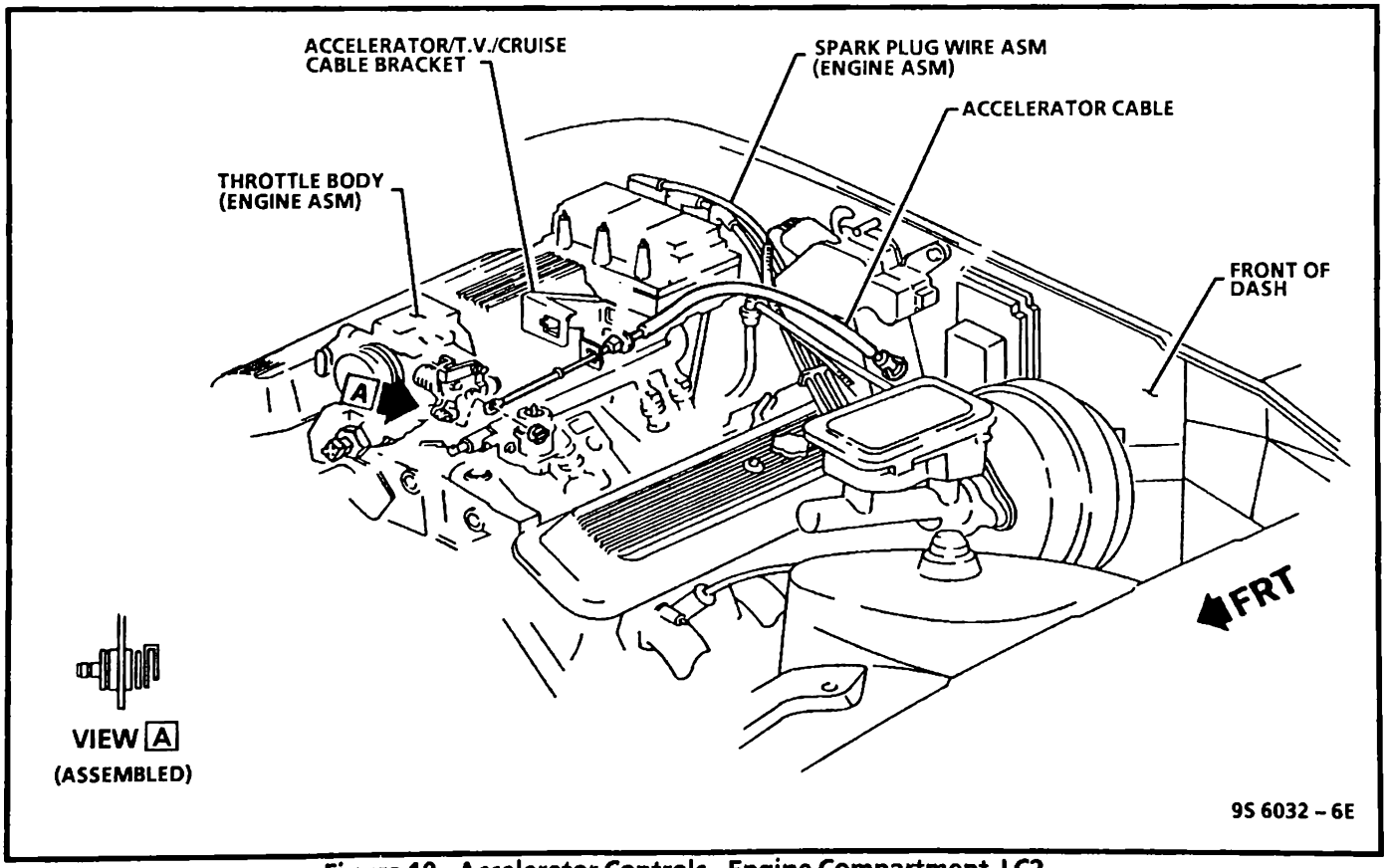

Figure 10 - Accelerator Controls - Engine Compartment LC2

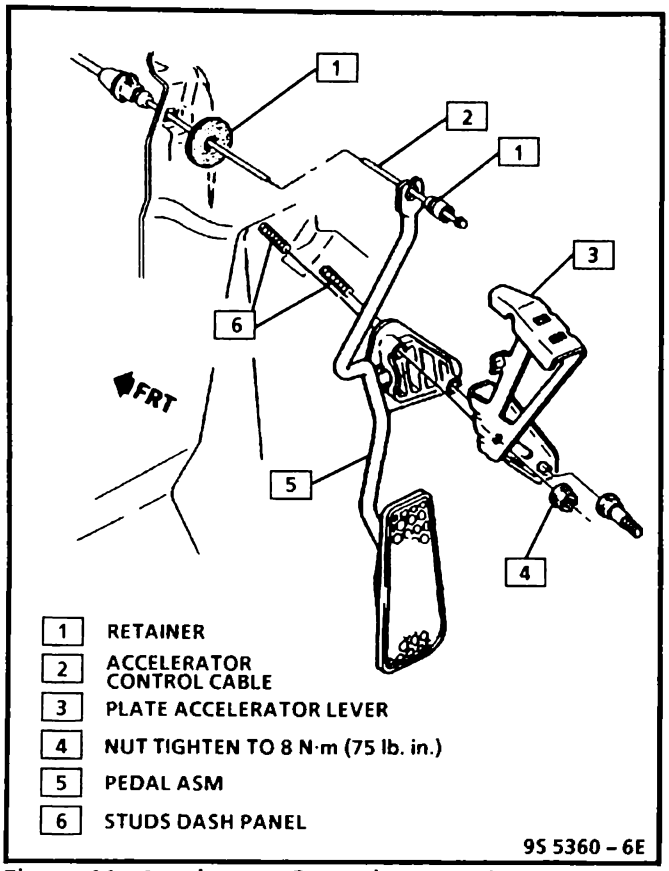

Figure 11 - Accelerator Controls - Pass. Compartment

- Flexible components (hoses, wires, conduits, etc.) must not be routed within 50 mm (2") of moving parts of accelerator linkage outboard of support unless routing is positively controlled.

Accelerator Pedal (Figure 11)

When performing service on the accelerator pedal, observe the following:

- The braided portion of the accelerator cable assembly must not come in contact with the front of dash sealer during assembly, repair, or replacement of the assembly.
- The mounting surface between support and dash panel must be free of insulation. The carpet and padding in pedal and tunnel area must be positioned to lay flat and be free of wrinkles and bunches.
- Slip accelerator control cable through slot in rod and then install retainer in rod, being sure it is seated. Use care when pressing the retainer into hole in rod to ensure that the cable is not kinked or damaged in any way.
- After securing all components of the accelerator linkage, linkage must operate freely without binding between full closed throttle and full wide open throttle.
- Wire, hoses, cables or other obstructions must not be placed within 13 mm (33/64") of cable or rod at any point in their travel.

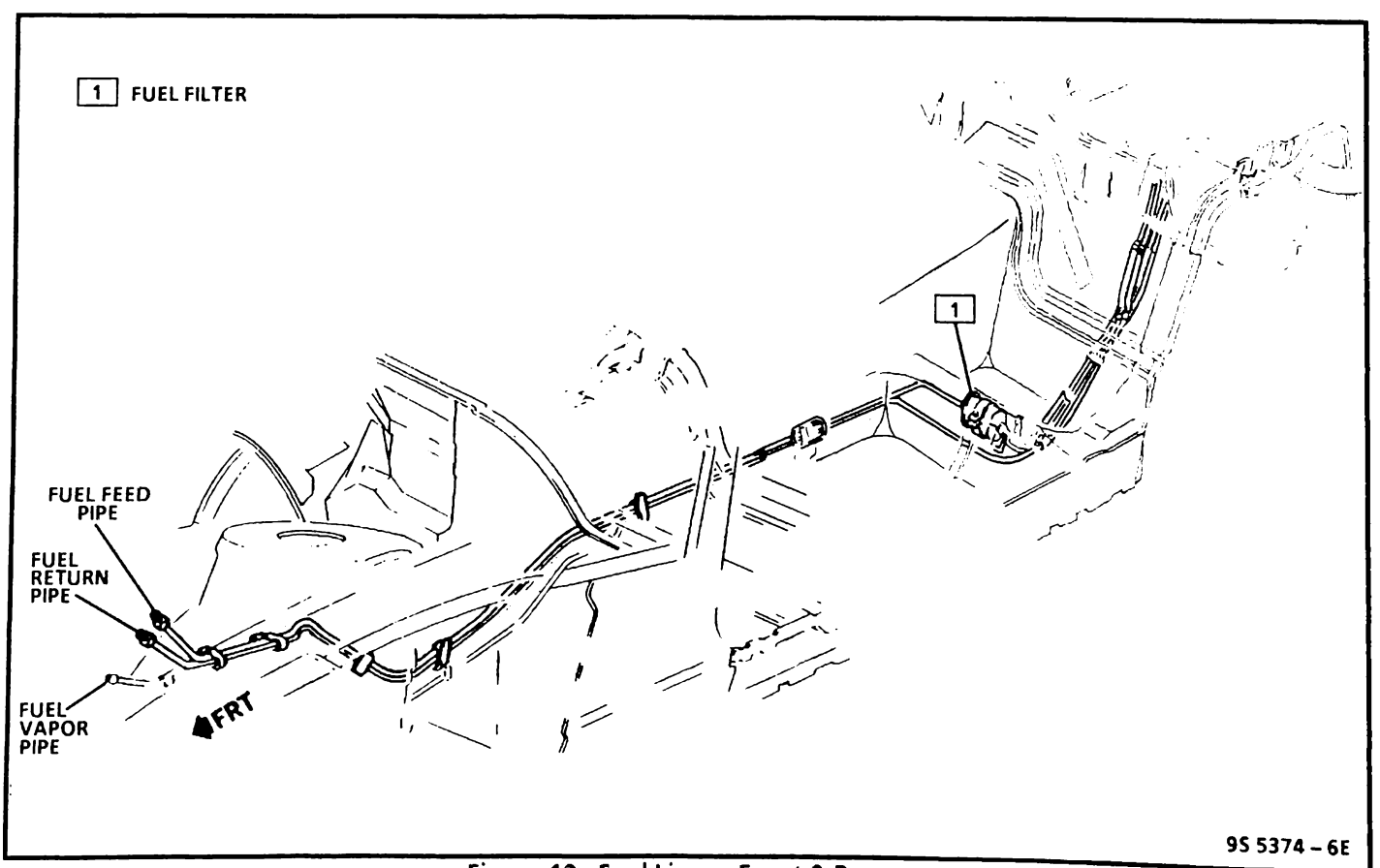

Figure 12 - Fuel Lines - Front & Rear

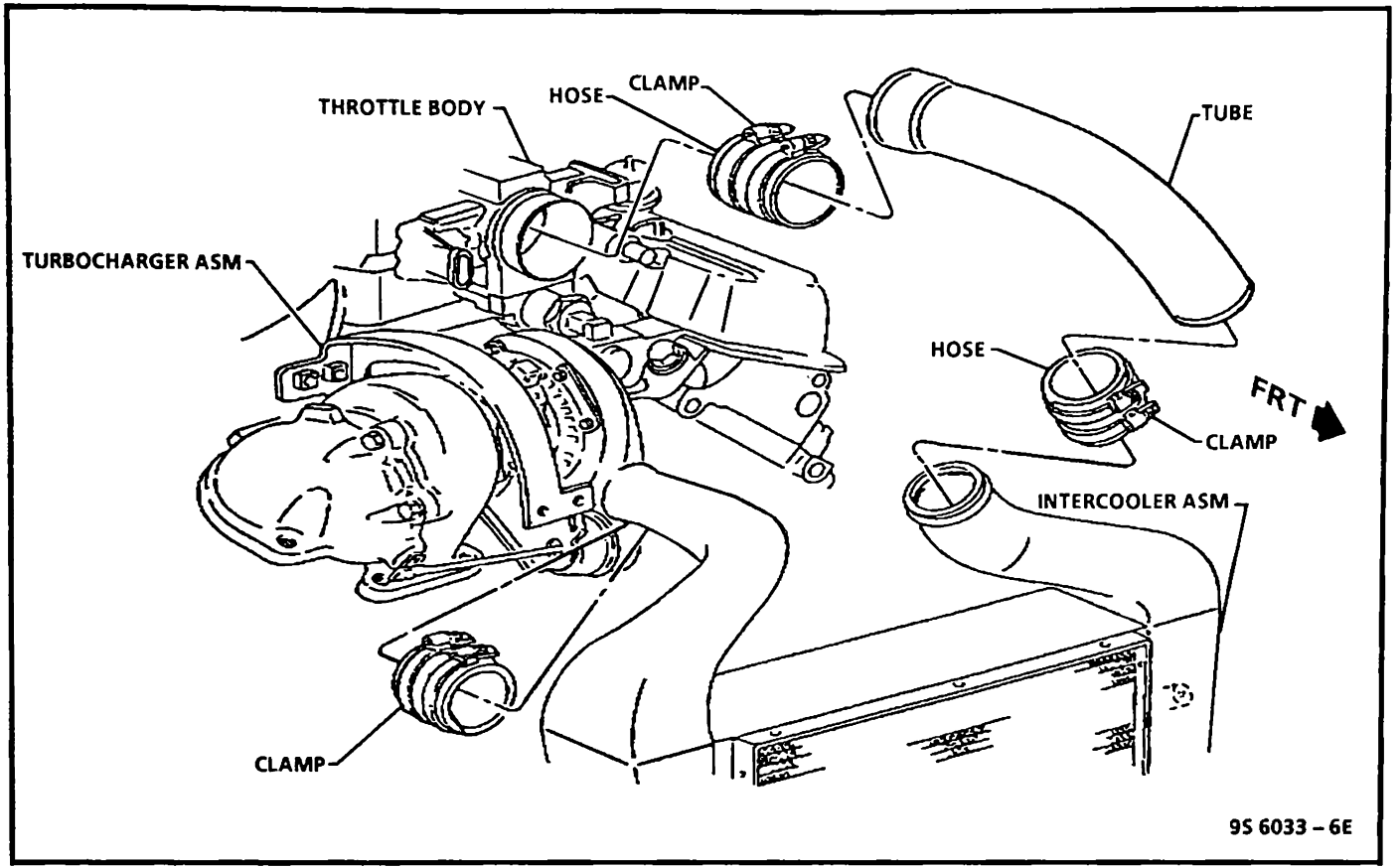

Figure 13 - Air Induction 3.8L Turbo

SECTION 6D2

CRANKING SYSTEM

The following "Notice" applies to one or more steps in the assembly procedure of components in this portion of the manual as indicated at appropriate locations by the terminology "NOTICE: See "Notice" on page 6D2-1 of this section."

NOTICE: When fasteners are removed, always reinstall them at the same location from which they were removed. If a fastener needs to be replaced, use the correct part number fastener for that application. If the correct part number fastener is not available, a fastener of equal size and strength (or stronger) may be used. Fasteners that are not reused, and those requiring thread locking compound will be called out. The correct torque value must be used when installing fasteners that require it. If the above conditions are not followed, parts or system damage could result.

CONTENTS

On-Vehicle Service 6D2-1
Starter 6D2-1
Specifications 6D2-2

ON-VEHICLE SERVICE

STARTER

Figure 1

Remove or Disconnect

1. Negative battery cable.
- Raise and suitably support vehicle as described in the 1989 Firebird Service Manual.
2. Nut (3), harness connector (2), and washer (1).
3. Nut (8), positive battery cable connector (7), and harness connectors (4 through 6).
4. Short bolt (11) and long bolt (10).
   - Long bolt (10) will remain with the starter (9). Completely remove short bolt (11).
5. Starter (9) with long bolt (10).

Install or Connect

NOTICE: See "Notice" on page 6D2-1 of this section.

1. Starter (9) with long bolt (10).
2. Long bolt (10) and short bolt (11) to engine.

Tighten

- Bolts (10 and 11) to 48 N·m (35 lb. ft.).
3. Harness connectors (4 through 6), positive battery cable connector (7), and nut (8).
4. Washer (1), harness connector (2), and nut (3).
- Lower vehicle.
5. Negative battery cable.

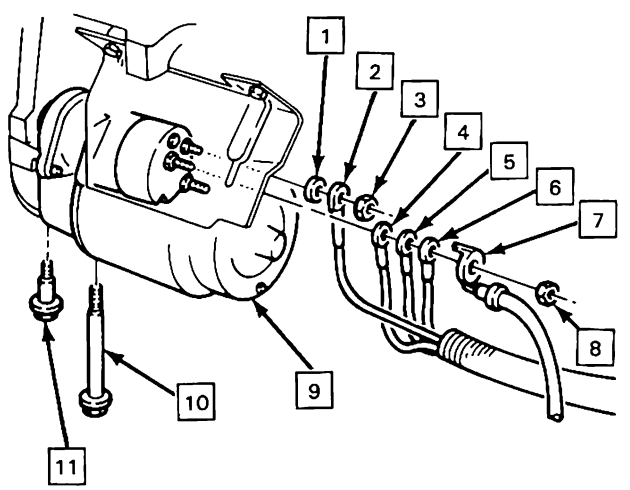

1 WASHER
2 HARNESS CONNECTOR
3 NUT
4 HARNESS CONNECTOR
5 HARNESS CONNECTOR
6 HARNESS CONNECTOR
7 POSITIVE BATTERY CABLE CONNECTOR
8 NUT
9 STARTER
10 LONG BOLT
11 SHORT BOLT

KC0001-6D2S-F-RP

Figure 1 — Starter

SPECIFICATIONS

FASTENER TORQUE SPECIFICATIONS

Starter-to-Engine Bolt . . . . . 48 N·m (35 lb. ft.)

SECTION 6D3

CHARGING SYSTEM

The following "Notice" applies to one or more steps in the assembly procedure of components in this portion of the manual as indicated at appropriate locations by the terminology "NOTICE: See "Notice" on page 6D3-1 of this section."

NOTICE: When fasteners are removed, always reinstall them at the same location from which they were removed. If a fastener needs to be replaced, use the correct part number fastener for that application. If the correct part number fastener is not available, a fastener of equal size and strength (or stronger) may be used. Fasteners that are not reused, and those requiring thread locking compound will be called out. The correct torque value must be used when installing fasteners that require it. If the above conditions are not followed, parts or system damage could result.

CONTENTS

General Description 6D3-1
On-Vehicle Service 6D3-1
Generator Replacement 6D3-1
Air Conditioning and Generator Bracket Replacement 6D3-2
Unit Repair 6D3-2
CS-144 Generator 6D3-2
Specifications 6D3-5

GENERAL DESCRIPTION

A 120 amp, CS-144 generator is used. Diagnosis for CS-144 generators is the same as for CS-130 generators. Refer to the 1989 Firebird Service Manual.

ON-VEHICLE SERVICE

GENERATOR REPLACEMENT

Figure 1

Remove or Disconnect

1. Negative battery cable.
- Loosen clamps at air cleaner and turbocharger.
2. Air inlet duct.
3. Terminal plug and battery lead.
4. Drive belt. Refer to COOLING AND RADIATOR (SEC. 6B) in this supplement.
5. Bolt (7) and nut (2).

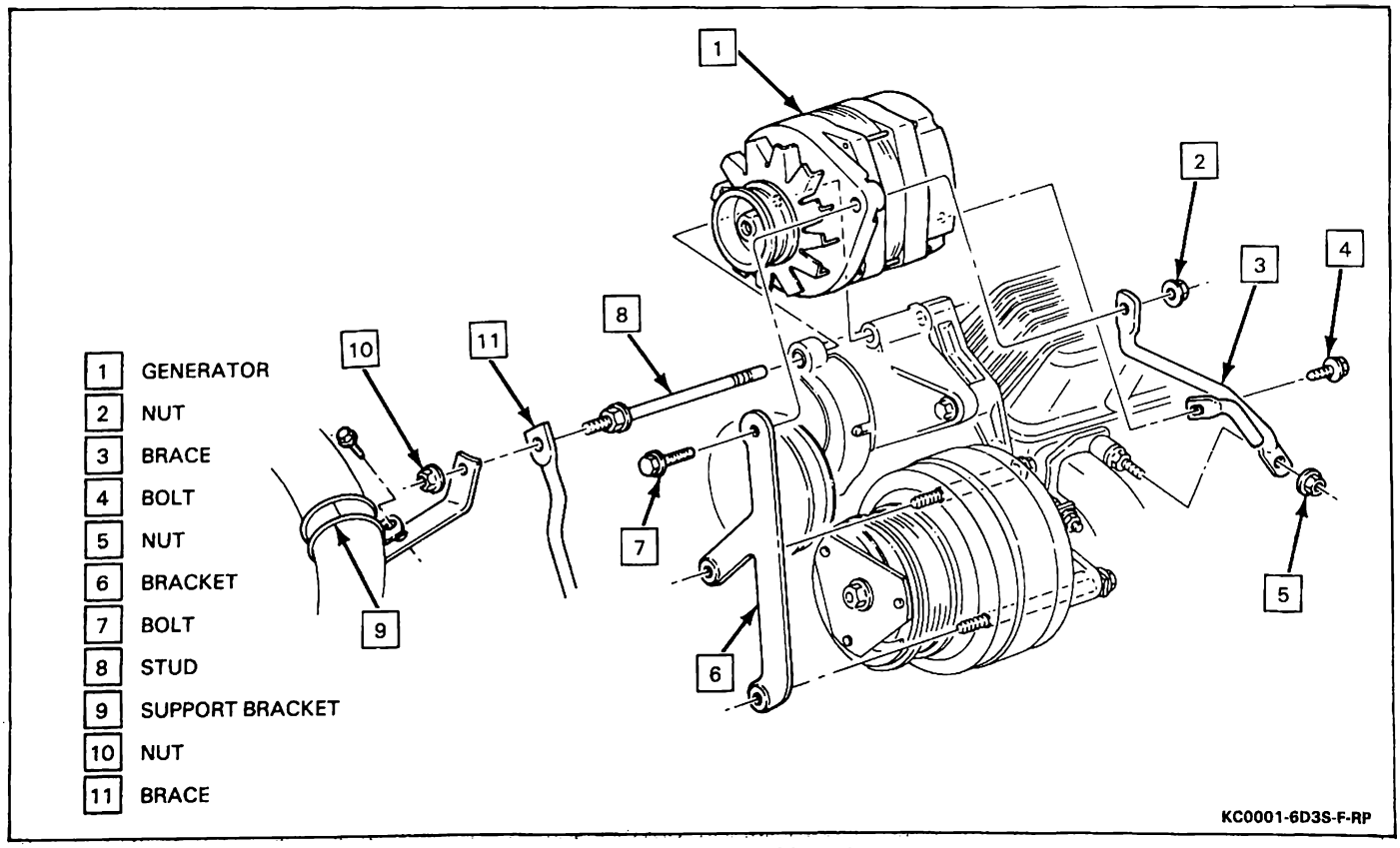

Figure 1 — Generator Mounting

6. Nut from bracket at fuel lines and wiring harness.
   - Move wiring harness out of the way from left rocker cover.
7. Bolt (4).
8. Nut (10).
9. Bolt from intercooler brace at intercooler.
10. Inlet hose support bracket (9) and intercooler brace (11) from stud (8).
11. Stud (8).
12. Generator (1).

Install or Connect

NOTICE: See "Notice" on page 6D3-1 of this section.

1. Generator (1).
2. Stud (8).

Tighten

- Stud (8) to 50 N·m (37 lb. ft.).

3. Intercooler brace (11) and inlet hose support bracket (9).
4. Bolt to intercooler brace (11) at intercooler.

Tighten

- Brace bolt to 20 N·m (15 lb. ft.).

5. Nut (10).

Tighten

- Nut (10) to 27 N·m (20 lb. ft.).

6. Bolt (4).

Tighten

- Bolt (4) to 17 N·m (13 lb. ft.).

- Reposition wiring harness to left rocker arm cover.

7. Nut to bracket at fuel lines and wiring harness.
8. Bolt (7) and nut (2).

Tighten

- Nut (2) to 50 N·m (37 lb. ft.).

9. Drive belt. Refer to COOLING AND RADIATOR (SEC. 6B) in this supplement.
10. Terminal plug and battery lead.
11. Air inlet duct.
    - Tighten clamps at air cleaner and turbocharger.
12. Negative battery cable.

AIR CONDITIONING AND GENERATOR BRACKET REPLACEMENT

For replacement of air conditioning and generator bracket, refer to MANUALLY CONTROLLED AIR CONDITIONING (SEC. 1B) of this supplement.

UNIT REPAIR

CS-144 GENERATOR

For disassembly, test and reassembly of the CS-144 generator, refer to Figures 2 and 3.

CS144 GENERATOR DISASSEMBLY TEST AND REASSEMBLY (GENERATOR REMOVED FROM ENGINE)

THRU–BOLT LOCATION

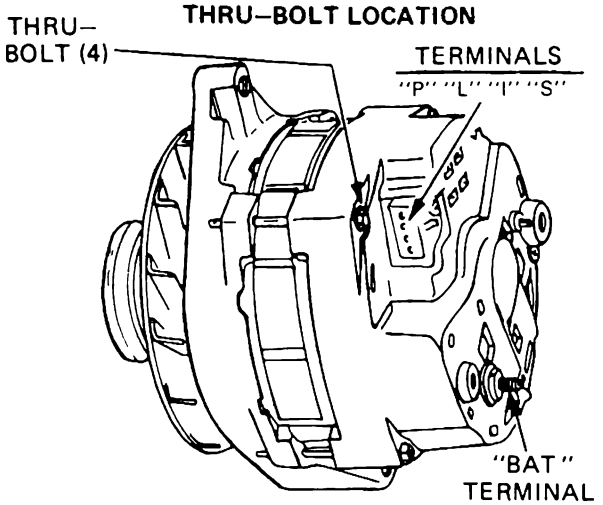

1. Make scribe marks on end frames to facilitate reassembly.
2. Remove thru-bolts and separate end frames.

END FRAME VIEW

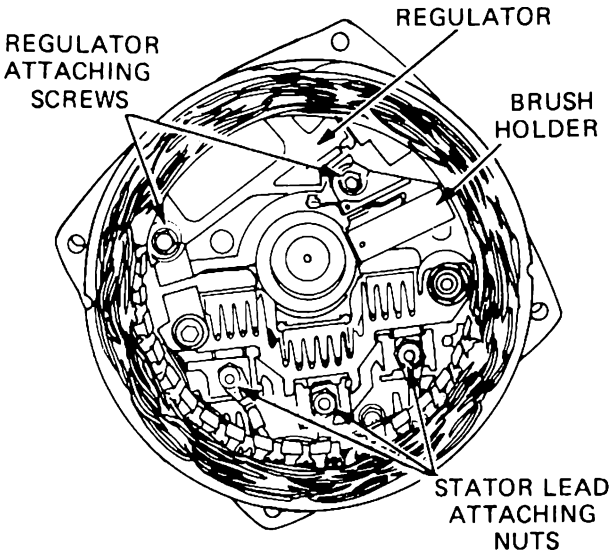

5 Remove three attaching nuts and remove stator from end frame

TESTING ROTOR

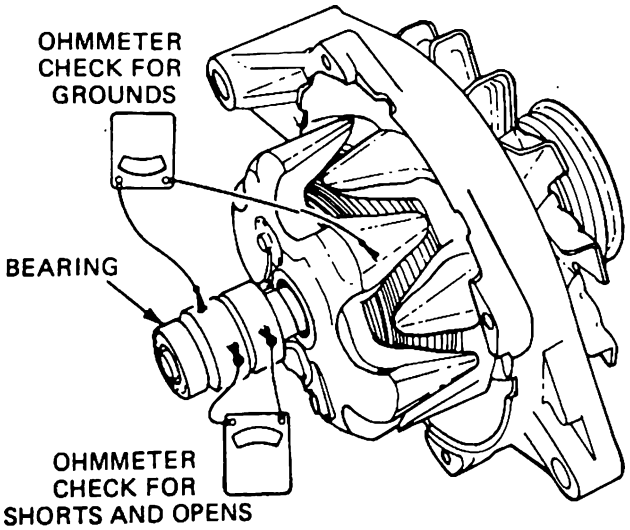

3. Check rotor for grounds with ohmmeter. Reading should be very high (infinite). If not, replace rotor.
4. Check rotor for shorts and opens. Should read ohms at 70°F per table. Replace rotor if outside range of 1.7 to 2.1 ohms.

TESTING STATOR

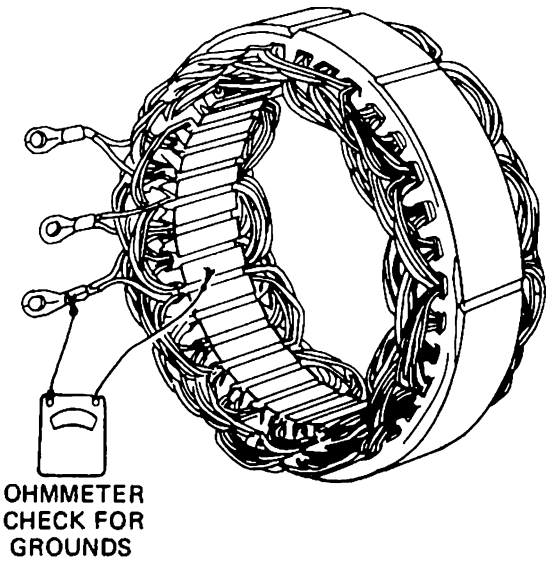

6. Check stator for grounds with ohmmeter. If reading is low, replace stator. Stator cannot be checked for opens and shorts with ohmmeter.

KC0004-6D3-B-RP

Figure 2 — Disassembly, Test and Reassembly of CS-144 Generator (1 of 2)

REMOVING REGULATOR AND BRUSH HOLDER

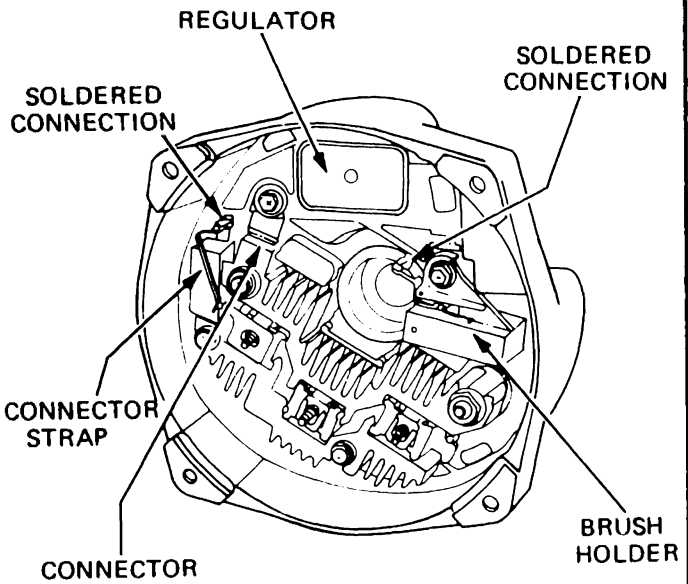

7. Unsolder connections, remove attaching screws and connector, separate regulator and brush holder from end frame.

TESTING RECTIFIER BRIDGE

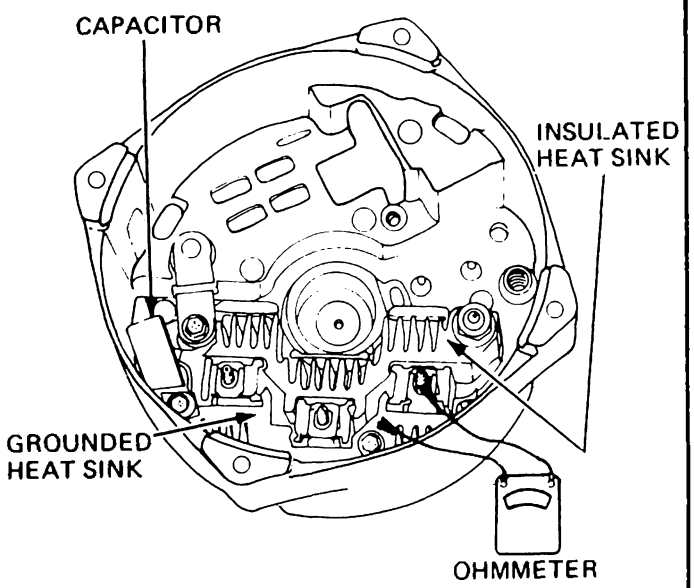

8. Check rectifier bridge with ohmmeter connected from grounded heat sink to flat metal on terminal. Reverse leads. If both readings are the same, replace rectifier bridge.
9. Repeat test between grounded heat sink and two other flat metal clips.
10. Repeat test between insulated heat sink and three flat metal clips.

BRUSHES RETAINED IN HOLDER

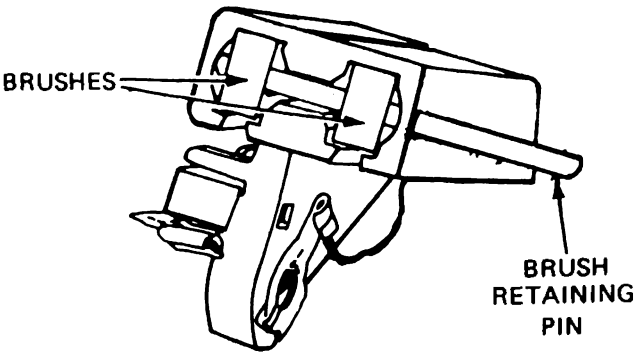

11. Clean brushes with soft dry cloth.
12. Put brushes in holder and hold with brush retaining pin.
13. Observe stack-up of parts in illustrations.

DRIVE END BEARING

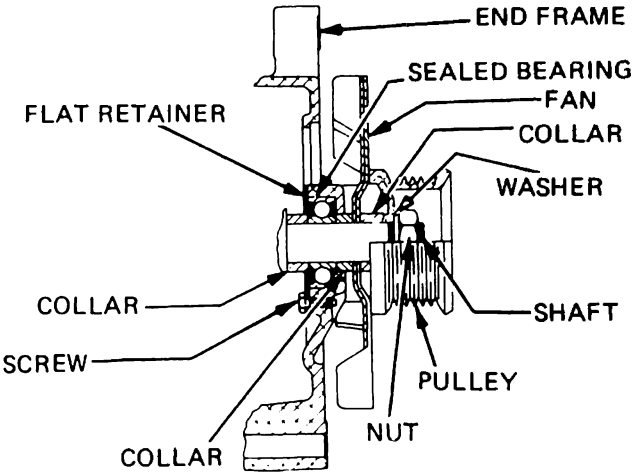

14. To remove rotor and drive end bearing, hold rotor with hex wrench in shaft end while removing nut. Push rotor from housing.
15. Remove plate and push bearing out.
16. Press against outer race to push bearing in. Bearing is double sealed, no added lubricant is required. Assemble retainer.
17. Press rotor into end frame. Assemble parts as shown. Torque shaft nut-54-108 N•m (40-80lb.ft.).
18. NOTICE: On slip ring end bearing, push bearing onto rotor shaft until stop is reached. A new bearing must be used whenever end frames are separated.
19. Assemble regulator, brush holder and connector to end frame. Securely solder connection between regulator and brush holder, and connection between regulator and connector strap. Assemble stator to end frame.
20. Assemble end frames. Carefully guide slip ring end bearing outer race into casting.
21. Assemble thru-bolts.
22. Remove brush retainer pin.

KC0005-6D3-B-RP

Figure 3 — Disassembly, Test and Reassembly of CS-144 Generator (2 of 2)

SPECIFICATIONS

FASTENER TORQUE SPECIFICATIONS

Generator Mounting Stud	50 N·m (37 lb. ft.)
Generator Mounting Bolt	17 N·m (13 lb. ft.)
Generator Mounting Nut	50 N·m (37 lb. ft.)
Bracket and Brace Stud Nut	27 N·m (20 lb. ft.)
Intercooler Brace-to-Intercooler Bolt	20 N·m (15 lb. ft.)

GENERATOR USAGE CHART

ENGINE	EQUIPMENT	GEN/MOD	AMPERES
LC2	All	1101349/CS-144	120

SECTION 6D4

IGNITION SYSTEM

The 3.8L turbocharged engine (LC2) utilizes a computer controlled coil ignition (C^3I) system. For explanation and diagnosis of the C^3I system, refer to DRIVEABILITY AND EMISSIONS — FUEL INJECTION (PORT) (SEC. 6E3) or ELECTRICAL DIAGNOSIS (SEC. 8A) of this supplement.

SECTION 6D5

ENGINE WIRING

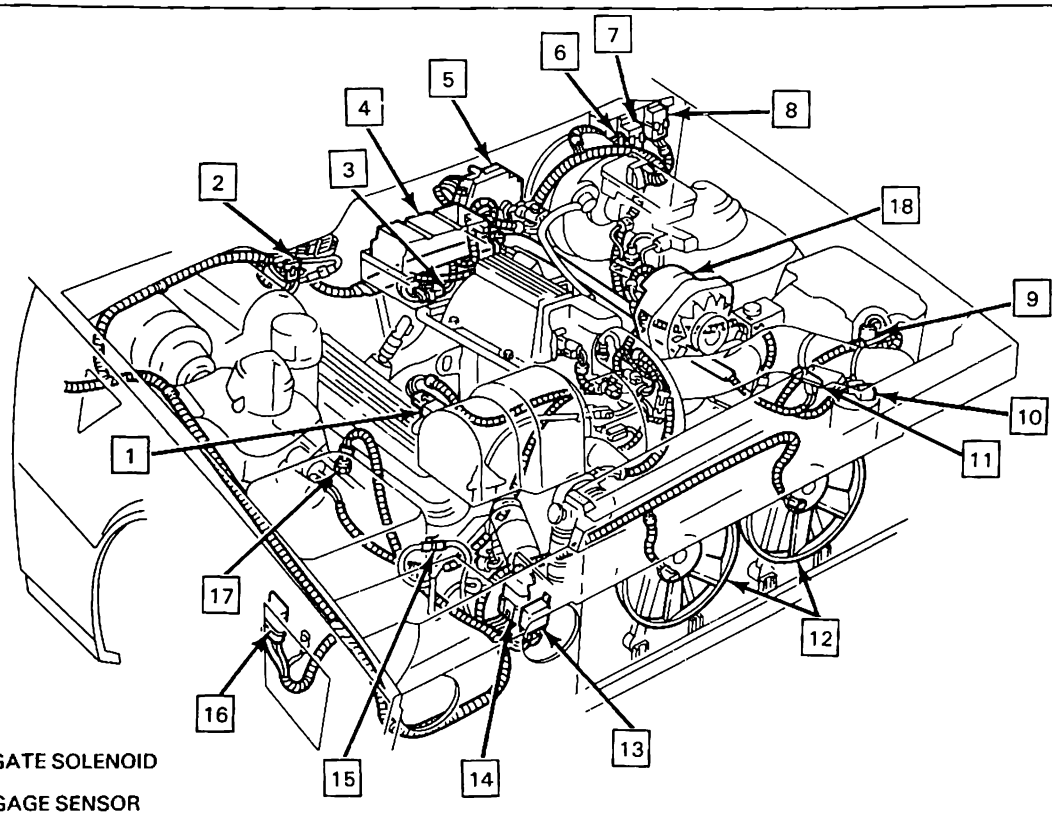

1 WASTEGATE SOLENOID
2 BOOST GAGE SENSOR
3 FUEL INJECTOR HARNESS
4 COMPUTER CONTROLLED COIL IGNITION (C^3I) MODULE
5 WINDSHIELD WIPER MOTOR
6 ELECTRONIC SPARK CONTROL (ESC) MODULE
7 FUEL PUMP RELAY
8 A/C COMPRESSOR CONTROL RELAY
9 WINDSHIELD WASHER PUMP
10 MAT SENSOR
11 MAF SENSOR
12 COOLING FAN
13 FAN DELAY RELAY
14 COOLANT FAN RELAY
15 ELECTRONIC CONTROL MODULE (ECM) LEAD
16 AUXILIARY FAN RELAY
17 A/C ENGINE COOLING FAN SWITCH
18 GENERATOR

KC0001-6D5S-F-RP

Figure 1 — Engine/ECM Wiring Harness (1 of 4)

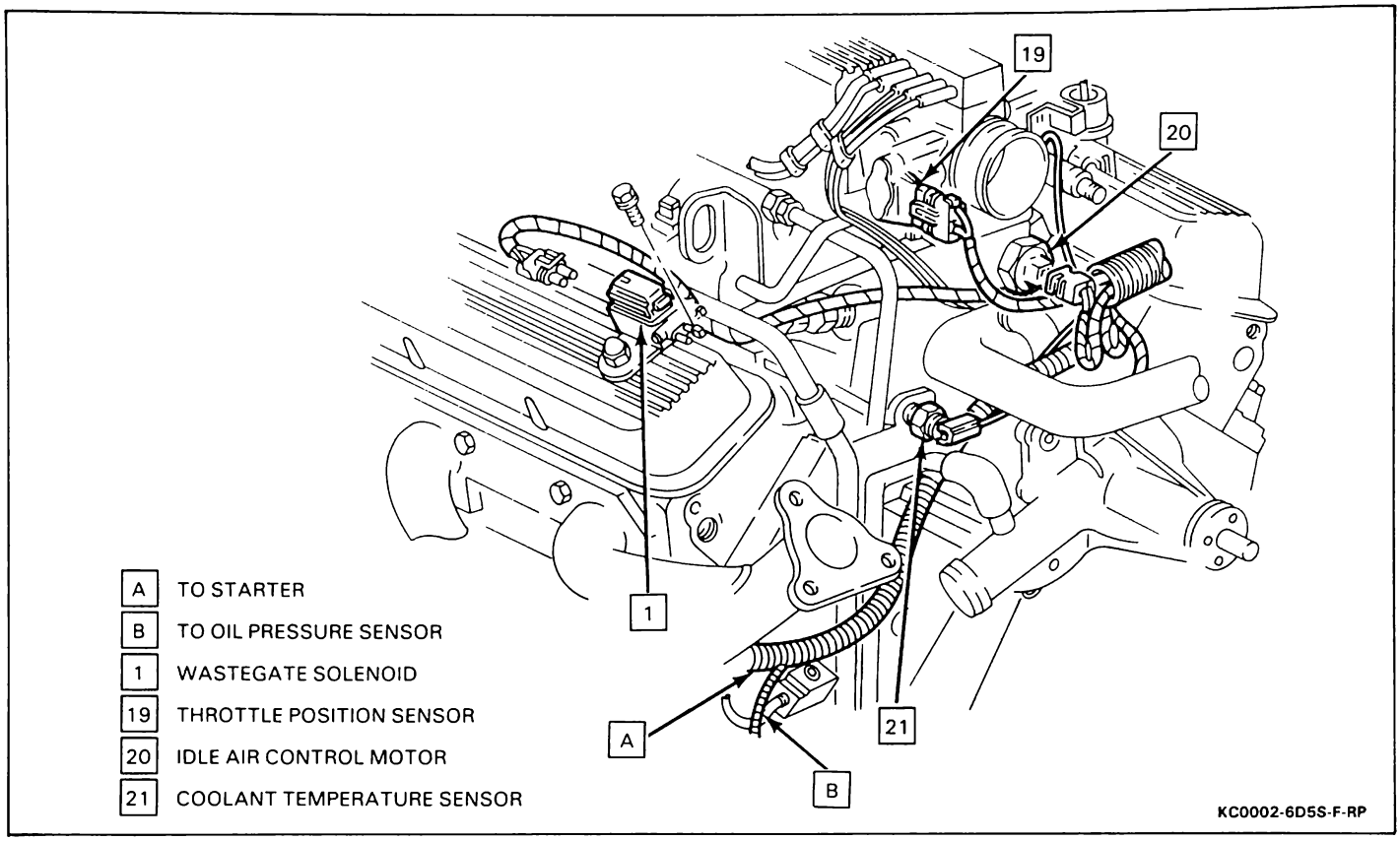

Figure 2 — Engine/ECM Wiring Harness (2 of 4)

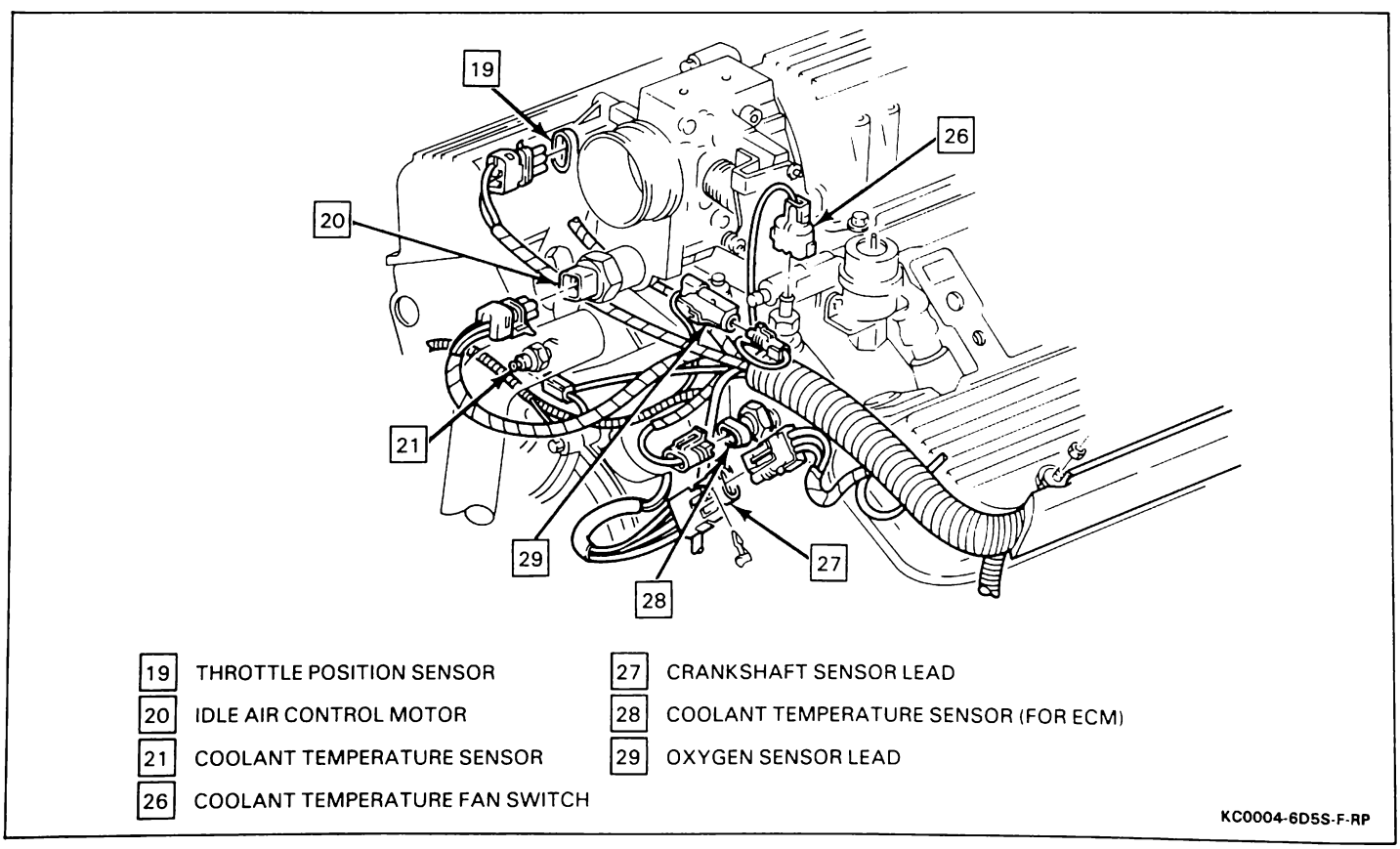

Figure 3 — Engine/ECM Wiring Harness (3 of 4)

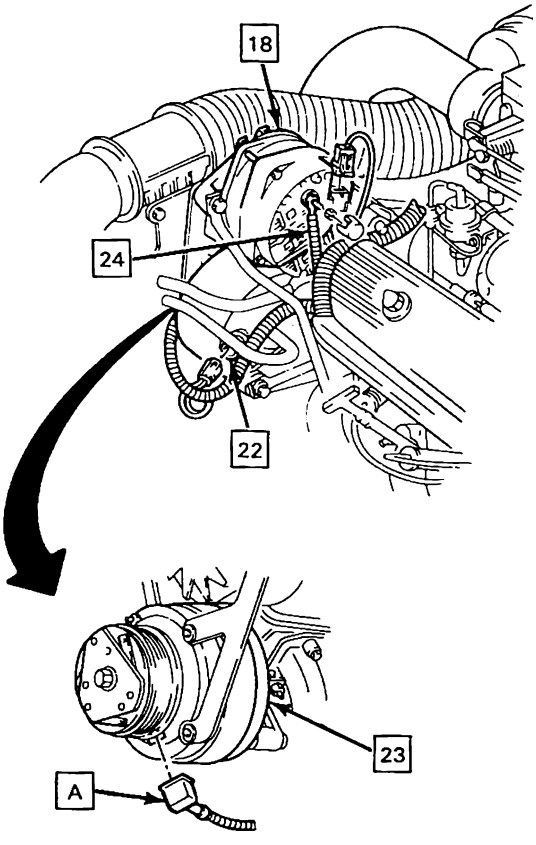

A	TO A/C COMPRESSOR CLUTCH COIL CONNECTOR
18	GENERATOR
22	A/C COMPRESSOR HIGH PRESSURE CUT-OFF SWITCH
23	A/C COMPRESSOR
24	BATTERY CABLE

KC0003-6D5S-F-RP

Figure 4 — Engine/ECM Wiring Harness (4 of 4)

SECTION 6E

DRIVEABILITY AND EMISSIONS GENERAL INFORMATION

CONTENTS

DRIVEABILITY AND EMISSIONS CONTROL 6E-1
EMISSIONS CONTROL INFORMATION LABEL 6E-1
MAINTENANCE SCHEDULE 6E-2
BLOCKING DRIVE WHEELS 6E-2
WHAT THIS SECTION CONTAINS 6E-2
VISUAL/PHYSICAL UNDERHOOD INSPECTION 6E-4
BASIC KNOWLEDGE AND TOOLS REQUIRED 6E-4
Electrostatic Discharge Damage 6E-4
DIAGNOSTIC INFORMATION 6E-4
"Service Engine Soon" Light 6E-4
Intermittent "Service Engine Soon" Light 6E-5
Reading Codes 6E-5
Clearing Codes 6E-5
Diagnostic Mode 6E-5
Field Service Mode 6E-6
ECM Learning Ability 6E-6
DIAGNOSTIC CIRCUIT CHECK 6E-6
ALDL "SCAN" TOOLS 6E-7
Normal (Open) Mode 6E-7
ALDL Mode 6E-7
Factory Test Mode 6E-7
"SCAN" TOOL USE WITH INTERMITTENTS 6E-7
WIRING HARNESS SERVICE 6E-7
WIRING CONNECTOR SERVICE 6E-8
Metri-Pack - Series 150 Terminals . . . 6E-9
Weather-Pack Connectors 6E-9
Compact Three Connectors 6E-9
Micro-Pack Connectors 6E-9
TOOLS NEEDED TO SERVICE THE SYSTEM 6E-10
SPECIAL TOOLS 6E-11
GENERAL SPECIFICATIONS 6E-15
DRIVEABILITY AND EMISSIONS SECTIONS
FUEL INJECTION (TBI) 6E2-1
FUEL INJECTION (PORT) 6E3-1

DRIVEABILITY AND EMISSIONS CONTROL

The computer command control system, which is controlled by the electronic control module (ECM), is designed to maintain exhaust emission levels at federal standards while providing good driveability and fuel efficiency. The functions of the system are based on data gathered by sensors and switches located throughout the vehicle. The ECM maintains control over fuel delivery, ignition, idle air flow, the fuel pump and other system components, while monitoring the system for faulty operation with its diagnostic capabilities. See Figure 1.

It is important to review the component sections and wiring diagrams in Sections "6E2" and "6E3" to determine which systems are controlled by the ECM.

EMISSIONS CONTROL INFORMATION LABEL

The underhood Vehicle Emissions Control Information label (Figure 2) contains important emission specifications and setting procedures. In the upper left corner is exhaust emission information which identifies the year, the manufacturing division of the engine, the displacement of the engine in liters, the class of vehicle, and type of fuel metering. There is also an illustrated emission component and vacuum hose schematic.

This label is located in the engine compartment of every General Motors vehicle. If the label has been removed, it can be ordered from GM Service Parts Organization (GMSPO).

ALL NEW GENERAL MOTORS VEHICLES ARE CERTIFIED BY THE UNITED STATES ENVIRONMENTAL PROTECTION AGENCY AS CONFORMING TO THE REQUIREMENTS OF THE REGULATIONS FOR THE CONTROL OF AIR POLLUTION FROM NEW MOTOR VEHICLES. THIS CERTIFICATION IS CONTINGENT ON CERTAIN ADJUSTMENTS BEING SET TO FACTORY STANDARDS. IN MOST CASES, THESE ADJUSTMENT POINTS EITHER HAVE BEEN PERMANENTLY SEALED AND/OR MADE INACCESSIBLE TO PREVENT INDISCRIMINATE OR ROUTINE ADJUSTMENT IN THE FIELD. FOR THIS REASON, THE FACTORY PROCEDURE FOR TEMPORARILY REMOVING PLUGS, CAPS, ETC., FOR PURPOSES OF SERVICING THE PRODUCT, MUST BE STRICTLY FOLLOWED AND, WHEREVER PRACTICABLE, RETURNED TO THE ORIGINAL INTENT OF THE DESIGN.

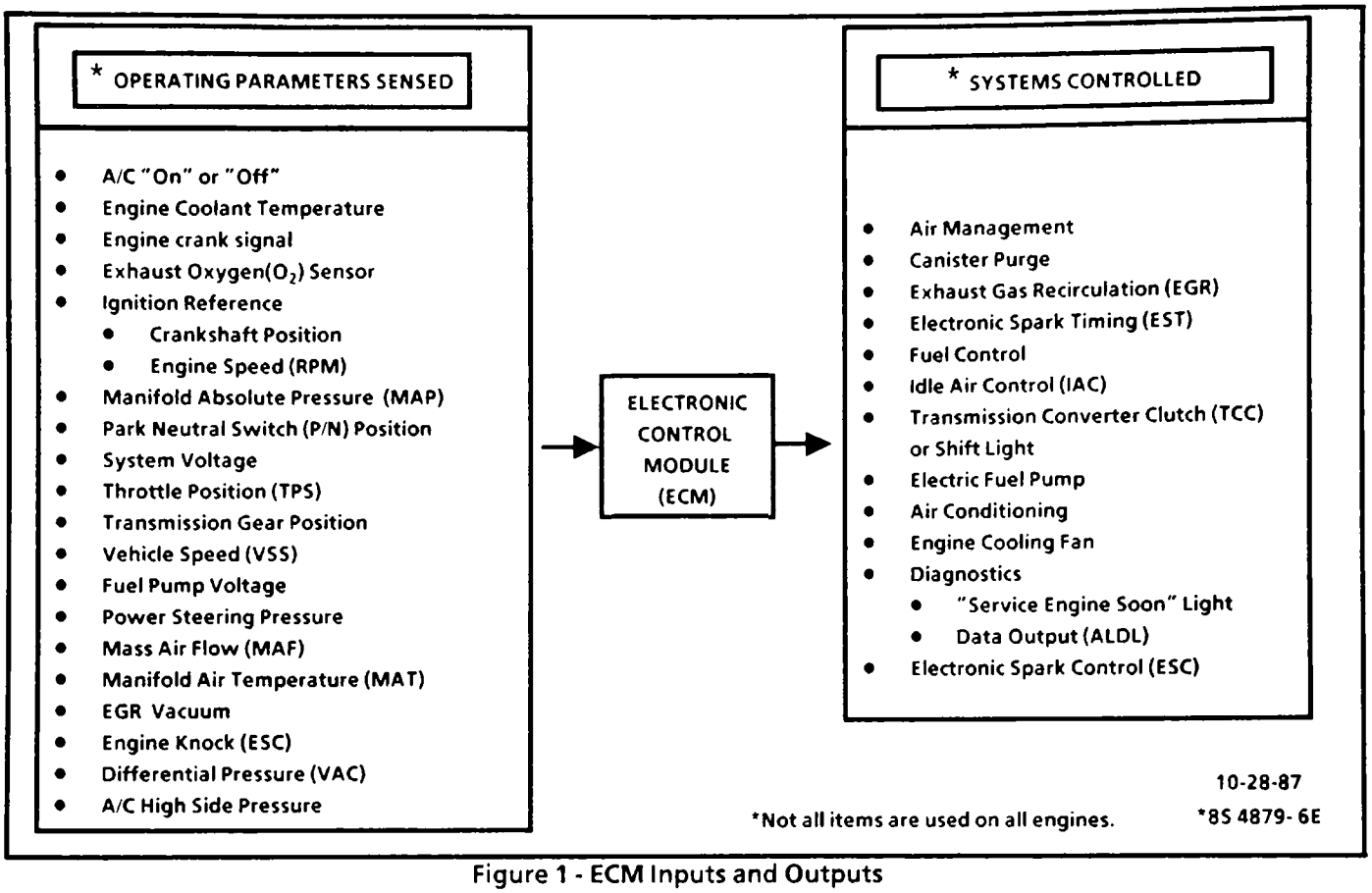

Figure 1 - ECM Inputs and Outputs

MAINTENANCE SCHEDULE

Refer to the General Motors Maintenance Schedule in Section "0B" of the Chassis Service Manual for the maintenance service that should be performed to retain emission control performance.

BLOCKING DRIVE WHEELS

The vehicle drive wheels always should be blocked and parking brake firmly set while checking the system.

WHAT THIS SECTION CONTAINS

This section of the Chassis Service Manual has been developed to describe the function and operation of the electronic engine control system that controls the driveability and emissions of the vehicle. Emphasis is placed on the diagnosis and repair of problems related to the system.

Section "6E" provides general diagnostic procedures, diagnostic "Scan" tool use, wiring and terminal repair procedures, and descriptions of special tools. It then leads into Sections "6E2" and "6E3." Section "6E2" deals with engine control systems using throttle body injection for fuel delivery and Section "6E3" deals with port fuel injection systems.

Sections "6E2" and "6E3" are divided into three major sub-sections dealing with diagnosis and repair. They can be summarized as follows.

SECTION A: CIRCUIT INFORMATION & DIAGNOSIS

- Component Locations
- Wiring Diagrams
- ECM Terminal End View and Terminal Definitions
- Diagnostic Circuit Check. This must be the first step of any diagnostic procedure.
- Diagnostic Trouble Code Charts with facing pages containing circuit diagrams, circuit operation information, and helpful diagnostic information.

SECTION B: DRIVEABILITY & EMISSIONS SYMPTOMS

- This sub-section assists in diagnosis of intermittent problems or problems which don't result in the storing of diagnostic trouble codes. It is arranged by symptoms of poor driveability and emissions and lists possible causes of the problems.

SECTION C: COMPONENT CHECKS & SERVICE

- Component and Circuit Descriptions
- On-car Service
- Functional Checks/Diagnostic Charts

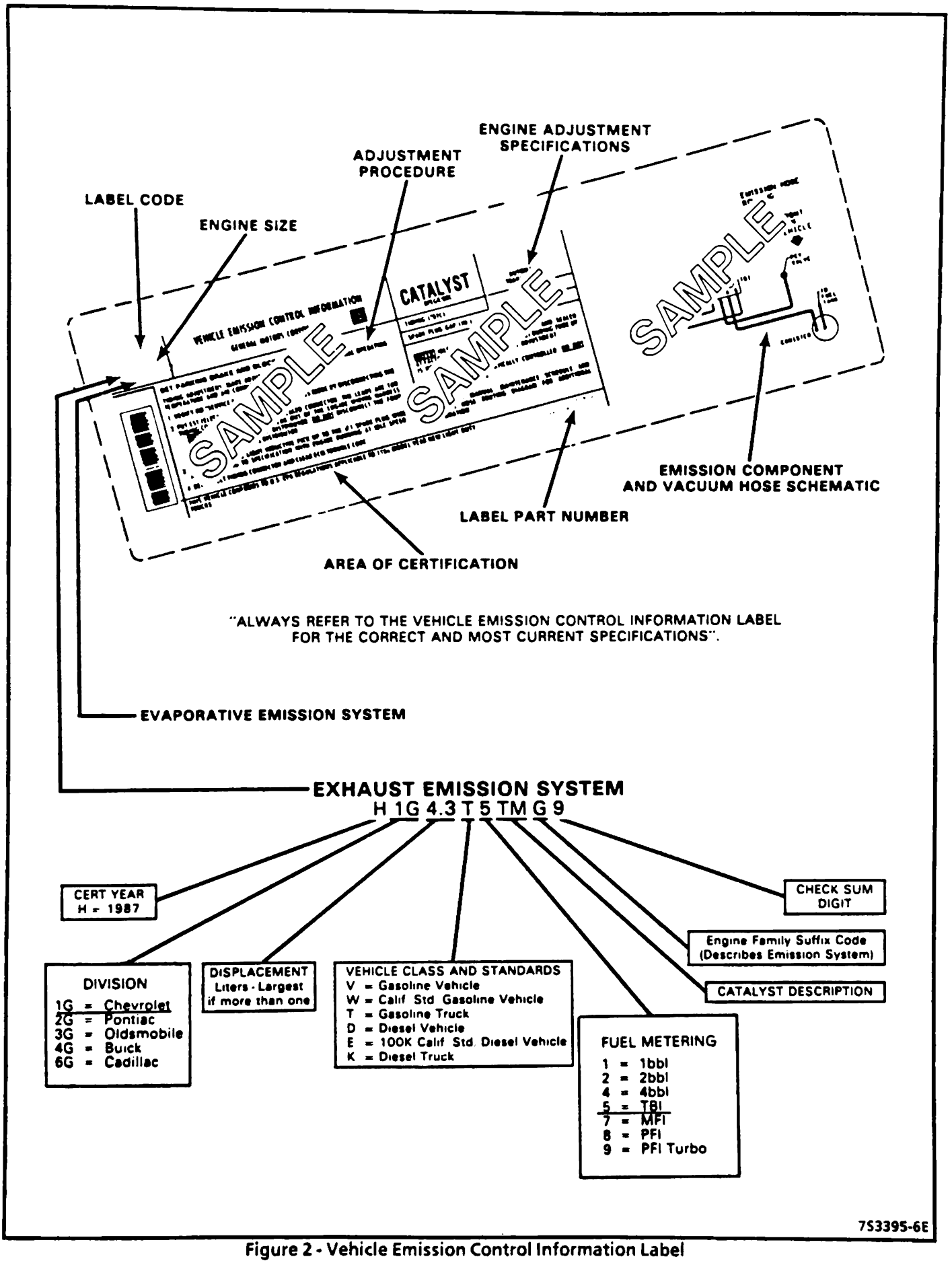

Figure 2 - Vehicle Emission Control Information Label

VISUAL/PHYSICAL UNDERHOOD INSPECTION

A careful visual and physical underhood inspection must be performed as part of any diagnostic procedure or in finding the cause of an emissions test failure. This can often lead to fixing a problem without further steps. Inspect all vacuum hoses for correct routing, pinches, cuts, or disconnects. Be sure to inspect hoses that are difficult to see beneath the air cleaner, compressor, generator, etc. Inspect all the wires in the engine compartment for proper connections, burned or chafed spots, pinched wires, or contact with sharp edges or hot exhaust manifolds. This visual/physical inspection is very important. It must be done carefully and thoroughly.

BASIC KNOWLEDGE AND TOOLS REQUIRED

To use this manual most effectively, a general understanding of basic electrical circuits and circuit testing tools is required. One should be familiar with wiring diagrams, the meaning of voltage, ohms, amps, the basic theories of electricity, and understand what happens in an open or shorted wire.

To perform system diagnosis, the use of a diagnostic "Scan" tool is required. A tachometer, test light, ohmmeter, digital voltmeter with 10 megohms impedance, vacuum gauge, and jumper wires are also required. Please become acquainted with the tools and their use before attempting to diagnose a vehicle. Special tools which are required for system service and the ones described above are illustrated at the end of this section.

Electrostatic Discharge Damage

Electronic components used in control systems are often designed to carry very low voltage, and are very susceptible to damage caused by electrostatic discharge. It is possible for less than 100 volts of static electricity to cause damage to some electronic components. By comparison, it takes as much as 4,000 volts for a person to even feel the zap of a static discharge.

There are several ways for a person to become statically charged. The most common methods of charging are by friction and by induction. An example of charging by friction is a person sliding accross a car seat, in which a charge of as much as 25,000 volts can build up. Charging by induction occurs when a person with well insulated shoes stands near a highly charged object and momentarily touches ground. Charges of the same polarity are drained off, leaving the person highly charged with the opposite polarity. Static charges of either type can cause damage, therefore, it is important to use care when handling and testing electronic components.

NOTICE: To prevent possible Electrostatic Discharge damage:

- Do Not touch the ECM connector pins or soldered components on the ECM circuit board.
- When handling a PROM, CAL-PAK or MEM-CAL, Do Not touch the component leads, and Do Not remove integrated circuit from carrier.

DIAGNOSTIC INFORMATION

The diagnostic "trouble tree" charts and functional checks in this manual are designed to locate a faulty circuit or component through logic based on the process of elimination. The charts are prepared with the requirement that the vehicle functioned correctly at the time of assembly and that there are no multiple failures.

The ECM performs a continual self-diagnosis on certain control functions. This diagnostic capability is complemented by the diagnostic procedures contained in this manual. The ECM's language for communicating the source of a malfunction is a system of diagnostic trouble codes. The codes are two or three digit numbers that can range from 12 to 999. When a malfunction is detected by the ECM, a code is set and the "Service Engine Soon" light is illuminated.

"Service Engine Soon" Light

This light is on the instrument panel and has the following functions.

- It informs the driver that a problem has occurred and that the vehicle should be taken for service as soon as reasonably possible.
- It displays "Trouble Codes" stored by the ECM which help the technician diagnose system problems.
- It indicates "Open Loop" or "Closed Loop" operation.

As a bulb and system check, the light will come "ON" with the key "ON" and the engine not running. When the engine is started, the light will turn "OFF." If the light remains "ON," the self-diagnostic system has detected a problem. If the problem goes away, the light will go out in most cases after 10 seconds, but a Trouble Code will remain stored in the ECM.

When the light remains "ON" while the engine is running, or when a malfunction is suspected due to a driveability or emissions problem, a **"Diagnostic Circuit Check" must be performed**. The procedures for these checks are given in Section "A" of "6E2" and "6E3." These checks will expose malfunctions which may not be detected if other diagnostics are performed prematurely.

Intermittent "Service Engine Soon" Light

In the case of an "intermittent" problem, the "Service Engine Soon" light will light for ten (10) seconds and then will go out. However, the corresponding trouble code will be stored in the memory of the ECM until the battery voltage to the ECM has been removed. When unexpected codes appear during the code reading process, one can assume that these codes were set by an intermittent malfunction and could be helpful in diagnosing the system.

An intermittent code may or may not re-set. If it is an intermittent failure, a Diagnostic Trouble Code Chart is not used. Consult the "Diagnostic Aids" on the page facing the diagnostic chart corresponding to the intermittent trouble code. Section "B" also covers the topic of "Intermittents." A physical inspection of the applicable sub-system most often will resolve the problem.

Reading Codes

The provision for communicating with the ECM is the Assembly Line Diagnostic Link (ALDL) connector (See Figure A-4). It is usually located under the instrument panel and is sometimes covered by a plastic cover labelled "DIAGNOSTIC CONNECTOR." It is used in the assembly plant to recieve information in checking that the engine is operating properly before it leaves the plant. The code(s) stored in the ECM's memory can be read either through a hand-held diagnostic scanner plugged into the ALDL connector or by counting the number of flashes of the "Service Engine Soon" light when the diagnostic terminal of the ALDL connector is grounded. The ALDL connector terminal "B" (diagnostic terminal) is the second terminal from the right of the ALDL connector's top row. The terminal is most easily grounded by connecting it to terminal "A" (internal ECM ground), the terminal to the right of terminal "B" on the top row of the ALDL connector.

Once terminals "A" and "B" have been connected, the ignition switch must be moved to the "ON" position, with the engine *not* running. At this point, the "Service Engine Soon" light should flash Code 12 three times consecutively. This would be the following flash sequence: "flash, pause, flash-flash, long pause, flash, pause, flash-flash, long pause, flash, pause, flash-flash." Code 12 indicates that the ECM's diagnostic system is operating. If Code 12 is not indicated, a problem is present within the diagnostic system itself, and should be adressed by consulting the appropriate diagnostic chart in Section "A".

Following the output of Code 12, the "Service Engine Soon" light will indicate a diagnostic trouble code three times if a code is present, or it will simply continue to output Code 12. If more than one diagnostic trouble code has been stored in the ECM's memory, the codes will be output from the lowest to the highest, with each code being displayed three times.

Clearing Codes

To clear the codes from the memory of the ECM, either to determine if the malfunction will occur again or because repair has been completed, the ECM power feed must be disconnected for at least thirty (30) seconds. Depending on how the vehicle is equipped, the ECM power feed can be disconnected at the positive battery terminal "pigtail", the inline fuseholder that originates at the positive connection at the battery, or the ECM fuse in the fuse block. (The negative battery terminal may be disconnected, but other on-board memory data, such as pre-set radio tuning, will also be lost.)

CAUTION: To prevent ECM damage, the key must be "OFF" when disconnecting or reconnecting ECM power.

When using a hand-held diagnostic scanner, or "Scan" tool to read the codes, clearing the diagnostic trouble codes is done in the same manner as in the above procedure.

Diagnostic Mode

When the Diagnostic terminal is grounded with the ignition "ON" and the engine "OFF," the system will enter what is called the Diagnostic Mode. In this mode the ECM will

1. Display a Code 12 by flashing the "Service Engine Soon" light (indicating the system is operating correctly).
2. Display any stored trouble codes by flashing the "Service Engine Soon" light. Each code will be flashed three times, then Code 12 will be flashed again.
3. Energize all ECM controlled relays and solenoids except fuel pump relay. This allows checking circuits which may be difficult to energize without driving the vehicle and being under particular operating conditions.
4. The IAC valve moves to its fully extended position on most models, blocking the idle air passage. This is useful in checking the minimum idle speed.

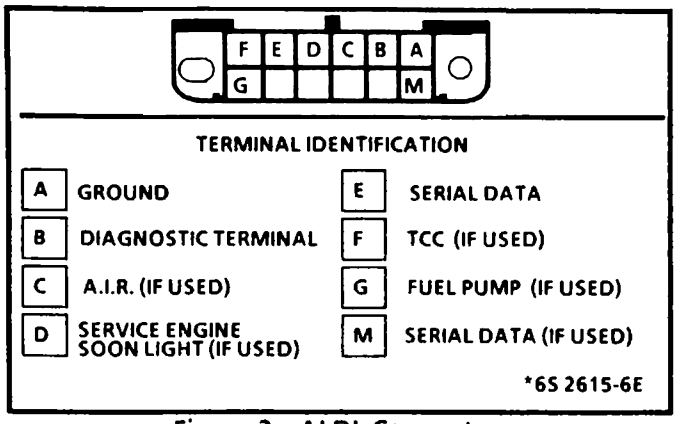

Figure 3 - ALDL Connector

Field Service Mode

If the diagnostic terminal is grounded with the engine running, the system will enter the Field Service mode. In this mode, the "Service Engine Soon" light will indicate whether the system is in "Open Loop" or "Closed Loop."

In "Open Loop" the "Service Engine Soon" light flashes two and one-half times per second.

In "Closed Loop," the light flashes once per second. Also, in "Closed Loop," the light will stay "OFF" most of the time if the system is running lean. It will stay "ON" most of the time if the system is running rich.

While the system is in Field Service Mode, new trouble codes cannot be stored in the ECM and the "Closed Loop" timer is bypassed.

ECM Learning Ability

The ECM has a "learning" ability which allows it to make corrections for minor variations in the fuel system to improve driveability. If the battery is disconnected, to clear diagnostic codes or for other repair, the "learning" process resets and begins again. A change may be noted in the vehicle's performance. To "teach" the vehicle, ensure that the engine is at operating temperature. The vehicle should be driven at part throttle, with moderate acceleration and idle conditions until normal performance returns.

DIAGNOSTIC CIRCUIT CHECK

After the visual/physical underhood inspection, the "Diagnostic Circuit Check" is the starting point for all diagnostic procedures or finding the cause of an emissions test failure.

The correct procedure to diagnose a problem is to follow three basic steps.

1. Are the On-Vehicle Diagnostics working? This is determined by performing the "Diagnostic Circuit Check." Since this is the starting point for the diagnostic procedures or finding the cause of an emissions test failure, *always begin here.*

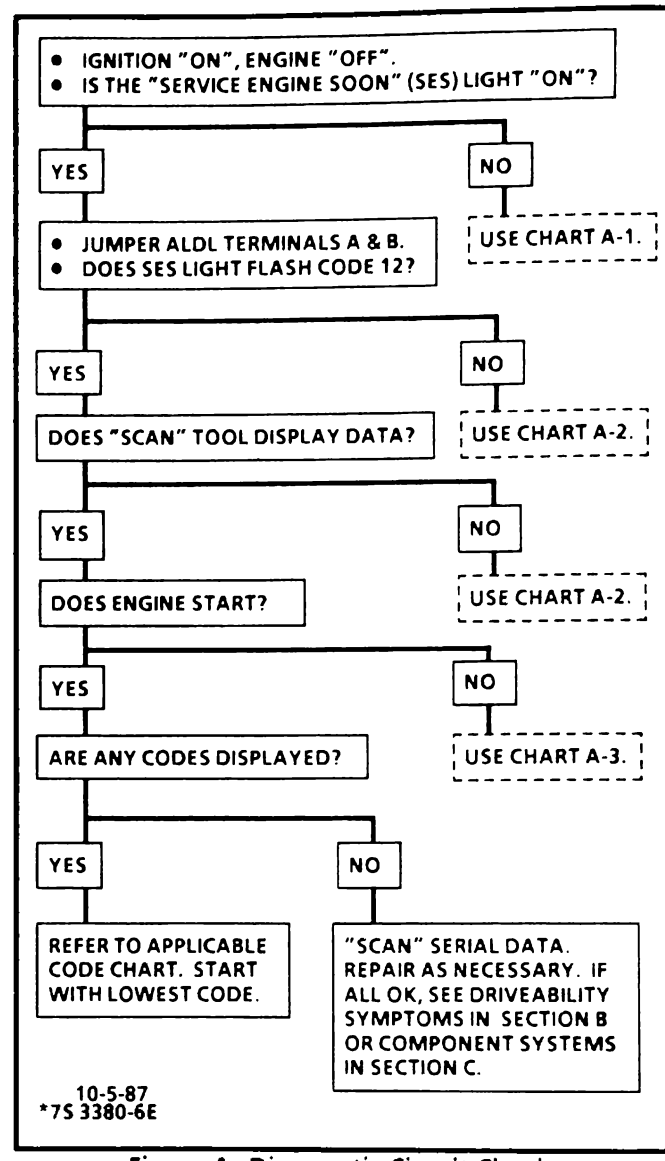

Figure 4 - Diagnostic Circuit Check

If the On-Vehicle Diagnostics aren't working, the "Diagnostic Circuit Check" will lead to a diagnostic chart in Section "A" to correct the problem. If the On-Vehicle Diagnostics are working correctly, the next step is

2. Is there a Trouble Code stored? If a trouble code is stored, go directly to the numbered code chart in Section "A". This will determine if the fault is still present. If no trouble code is stored, then
3. "Scan" Serial Data transmitted by the ECM. This involves reading the information available on the Serial Data Stream with one of the tools available for that purpose. Information on these tools and the meaning of the various displays can be found in the succeeding paragraphs. Expected readings under a particular operating condition can be found on the facing page of the Diagnostic Circuit Check.

ALDL "SCAN" TOOLS

The ECM can communicate a variety of information through ALDL connector terminals "E" or "M" (depending on the engine). This data is transmitted at a high frequency which requires a "Scan" tool for interpretation. There are several "Scan" tools available for reading this information.

With an understanding of the data which the tool displays, and knowledge of the circuits involved, the tool can be very useful in obtaining information which would be more difficult or impossible to obtain with other equipment.

"Scan" tools do not make the use of diagnostic charts unnecessary, nor can they indicate exactly where a problem is in a particular circuit. Trouble Tree Charts incorporate diagnosis procedures using a "Scan" tool where possible and most charts *require* the use of a "Scan" tool when it is applicable.

A "SCAN" TOOL THAT DISPLAYS FAULTY DATA SHOULD NOT BE USED AND THE PROBLEM SHOULD BE REPORTED TO THE MANUFACTURER. THE USE OF A FAULTY "SCAN" TOOL CAN RESULT IN MISDIAGNOSIS AND UNNECESSARY PARTS REPLACEMENT.

ECM's have three modes for transmitting information. The following information will describe the system operation in each of the three modes.

Normal (Open) Mode

On engines that can be monitored in the "Open" mode, certain parameters can be observed without changing the engine operating characteristics. The parameters capable of being read vary with engine families. Most "Scan" tools are programmed so that the system will go directly into the ALDL mode if the "Open" mode is not available.

ALDL Mode (Also Called 10K or Special)

In this mode, all obtainable data is readable. However, in this mode, the system operating characteristics are modified as follows.

- "Closed Loop" timers are bypassed.
- EST (spark) is advanced.
- P/N restrict functions are disabled.
- IAC valve controls engine idle to 1000 rpm ± 50 rpm (if applicable).
- On some engines, canister purge solenoid is enabled.

Factory Test Mode (Also Called Back-up or 3.9 K)

In this mode, the ECM is operating on the fuel back-up logic used to control the fuel delivery if the ECM fails. This mode verifies that the back-up feature is OK. The parameters that can be read on a "Scan" tool in this mode are not of much use for service.

"SCAN" TOOL USE WITH INTERMITTENTS

In some "Scan" tool applications, the data update rate makes the tool less effective than a voltmeter, such as when trying to detect an intermittent problem which lasts for a very short time. However, the "Scan" tool does allow one to manipulate wiring harnesses or components under the hood with the engine not running, while observing the "Scan" tool's readout.

The "Scan" tool can be plugged in and observed while driving the vehicle under the condition when the "Service Engine Soon" light turns "ON" momentarily or when the engine driveability is momentarily poor. If the problem seems to be related to certain parameters that can be checked on the "Scan" tool, they should be checked while driving the vehicle. If there does not seem to be any correlation between the problem and any specific circuit, the "Scan" tool can be checked on each position, watching for a period of time to see if there is any change in the readings that indicates intermittent operation.

The "Scan" tool is also an easy way to compare the operating parameters of a poorly operating engine with those of a known good one. For example, a sensor may shift in value but not set a trouble code. Comparing the sensor's readings with those of a known good vehicle may uncover the problem.

The "Scan" tool has the ability to save time in diagnosis and prevent the replacement of good parts. The key to using the "Scan" tool successfully for diagnosis lies in the technician's ability to understand the system he is trying to diagnose as well as an understanding of the "Scan" tool's operation and limitiations. The technician should read the tool manufacturer's operating manual to become familiar with the tool's operation.

WIRING HARNESS SERVICE

Wire harnesses should be replaced with proper part number harnesses. When signal wires are spliced into a harness, use wire with high temperature insulation only. See Figure 5 for instructions.

With the low current and voltage levels found in the system, it is important that the best possible bond be made at all wire splices by soldering the splices as shown.

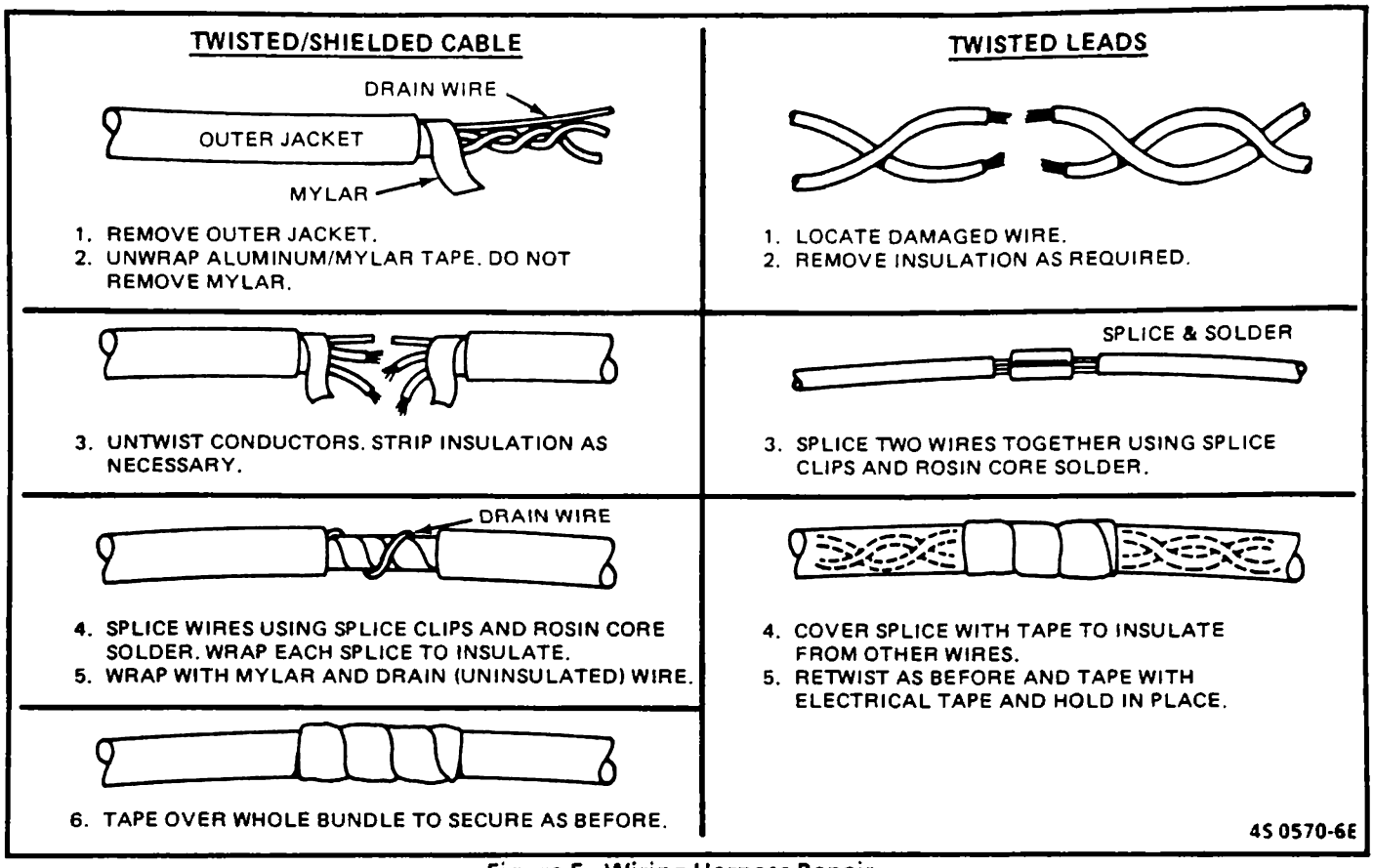

Figure 5 - Wiring Harness Repair

Use care when probing a connector or replacing connector terminals. It is possible to short between opposite terminals. If this happens, certain components can be damaged. Always use jumper wires between connectors for circuit checking. **NEVER** probe through connector seals, wire insulation, secondary ignition wires, boots, nipples, or covers. Even microscopic damage or holes may result in eventual water intrusion, corrosion and/or component or circuit failure.

WIRING CONNECTOR SERVICE

Most connectors in the engine compartment are protected against moisture and dirt which could create oxidation and deposits on the terminals. This protection is important because of the very low voltage and current levels found in the electronic system. The connectors have a lock which secures the male and female terminals together. A secondary lock holds the seal and terminal into the connector.

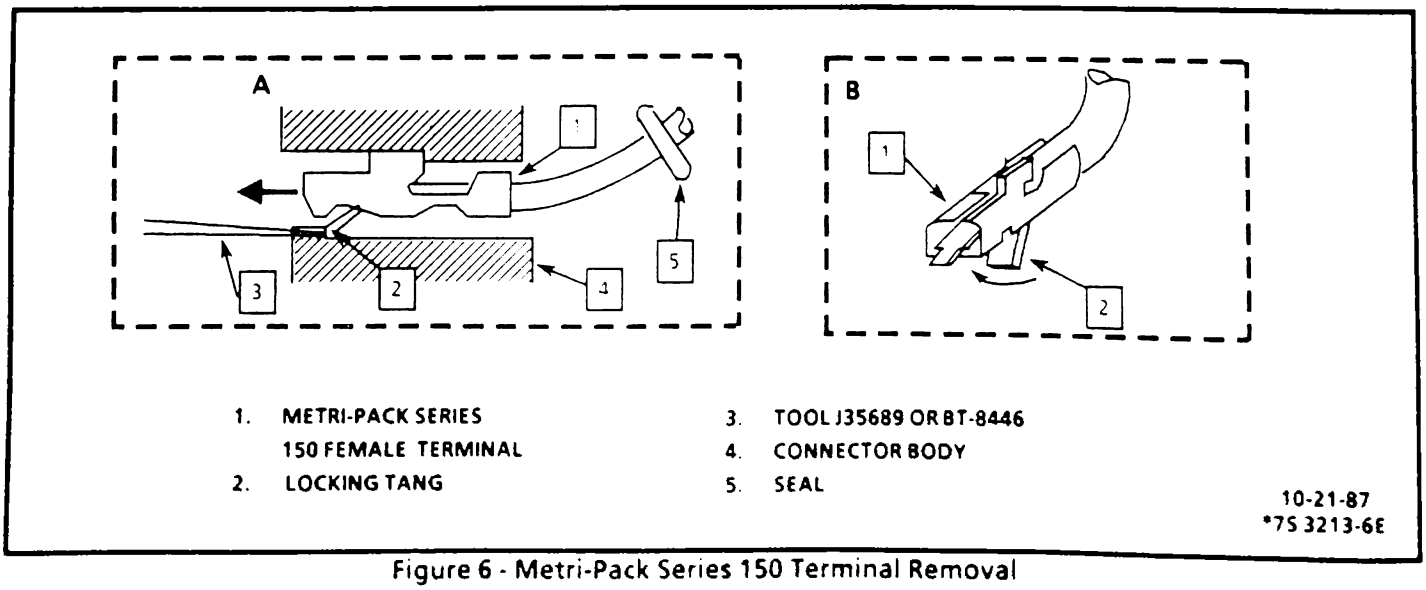

Figure 6 - Metri-Pack Series 150 Terminal Removal

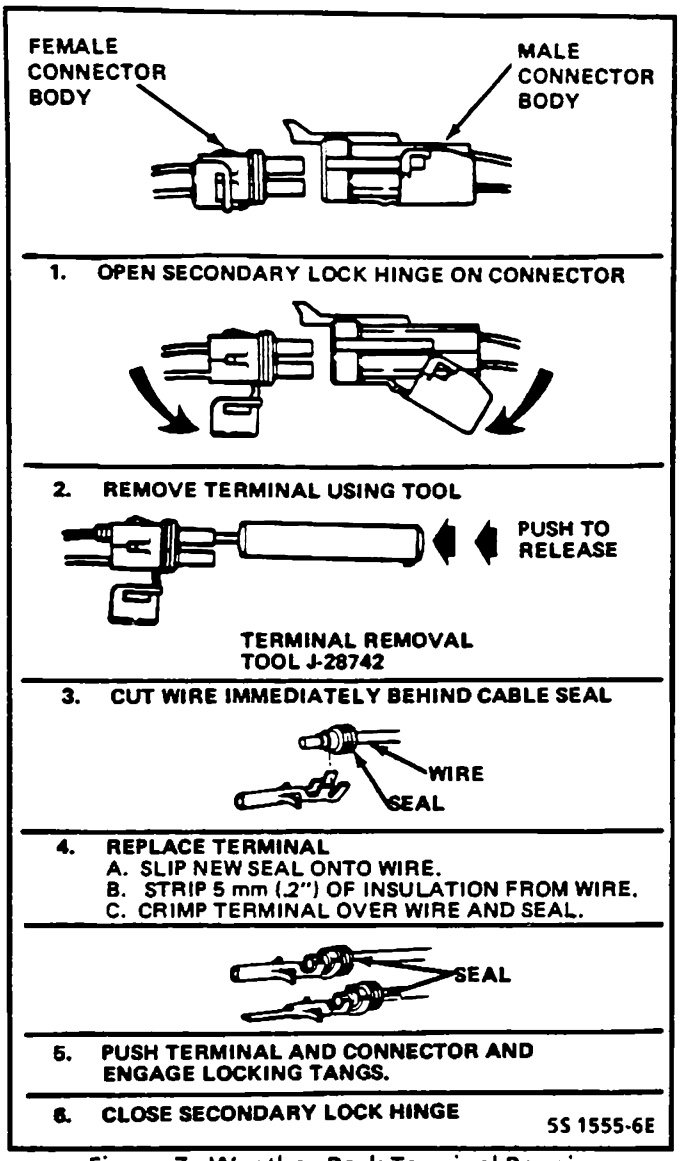

Figure 7 - Weather-Pack Terminal Repair

When diagnosing, open circuits are often difficult to locate by sight because oxidation or terminal misalignment are hidden by the connectors. Merely wiggling a connector on a sensor or in the wiring harness may locate the open circuit condition. This should always be considered when an open circuit or failed sensor is indicated. Intermittent problems may also be caused by oxidized or loose connections.

Before making a connector repair, be certain of the type of connector. Weather-Pack and Compact Three connectors look similar but are serviced differently. Replacement connectors and terminals are listed in Group 8.965 of the Standard Parts Catalog.

Metri-Pack Series 150 Terminals

Some ECM harness connectors contain terminals called Metri-Pack (Figure 6). These may be used at the coolant sensors as well as at ignition modules.

Metri-Pack terminals are also called "Pull-To-Seat" terminals because to install a terminal on a wire, the wire is first inserted through the seal (5) and connector (4). The terminal is then crimped on the wire, and the terminal pulled back into the connector to seat it in place.

To remove a terminal:

1. Slide the seal back on the wire.
2. Insert tool (3) BT-8518, J 35689, or equivalent as shown in insert "A" and "B" to release the terminal locking tang (2).
3. Push the wire and terminal out through the connector

If the terminal is being reused, reshape the locking tang (2).

Weather-Pack Connectors

Figure 7 shows a Weather-Pack connector and the tool (J-28742, BT-8234-A or equivalent) required to service it. This tool is used to remove the pin and sleeve terminals. If terminal removal is attempted with an ordinary pick, there is a good chance that the terminal will be bent or deformed, and unlike standard blade type terminals, these terminals cannot be straightened once they are bent.

Make certain that the connectors are properly seated and all of the sealing rings in place when connecting leads. The hinge-type flap provides a secondary locking feature for the connector. It improves the connector reliability by retaining the terminals if the small terminal lock tangs are not positioned properly.

Weather-Pack connections cannot be replaced with standard connections. Instructions are provided with Weather-Pack connector and terminal packages.

Compact Three Connectors

The Compact Three connector, which looks similar to a Weather-Pack connector, is not sealed and is used where resistance to the environment is not required. This type of connector most likely is used at the AIR control solenoid. Use the standard method when repairing a terminal. Do not use the Weather-pack terminal tool J-28742.

Micro-Pack Connectors

Micro-Pack terminal (Figure 8) replacement requires the use of special tool J-33095, BT-8234-A or equivalent.

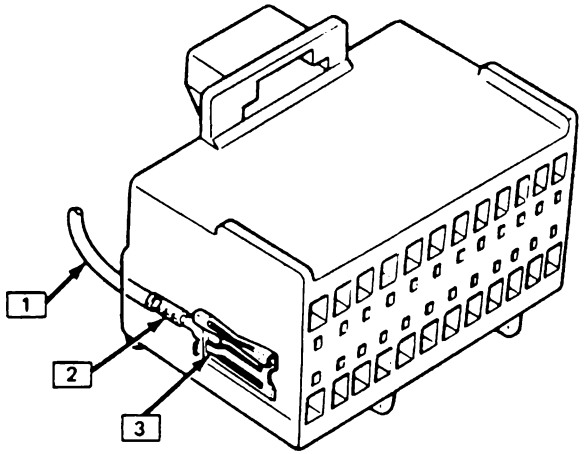

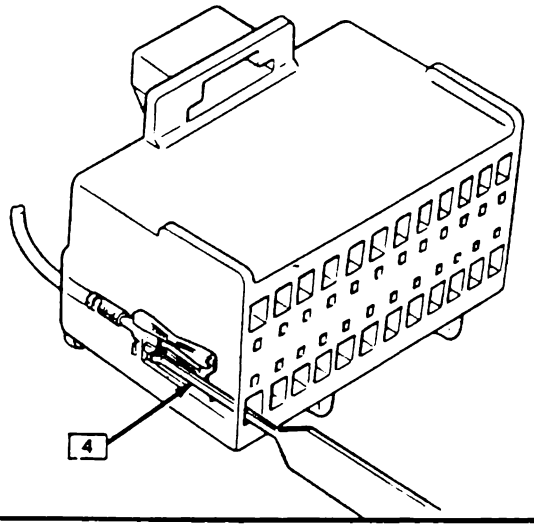

1	CABLE	3	LOCKING TANG
2	TERMINAL	4	TOOL J33095

1. GRASP CABLE AND PUSH TERMINAL TO THE MOST FORWARD POSITION.
2. INSERT TOOL J33095 STRAIGHT INTO THE FRONT OF THE CONNECTOR CAVITY. DO NOT USE CONVENTIONAL PICK TO REMOVE TERMINAL.
3. WITH TOOL IN PLACE, GENTLY PULL ON THE CABLE TO REMOVE TERMINAL.
4. VISUALLY CHECK TERMINAL AND REPLACE IF TERMINAL CAVITY OR TANG IS DAMAGED.
5. INSTALL TERMINAL INTO CONNECTOR CAVITY UNTIL LOCKING TANG HAS SNAPPED INTO POSITION.

5S 1418-6E

Figure 8 - Micro-Pack Terminal Replacement

TOOLS NEEDED TO SERVICE THE SYSTEM

The system requires an "Scan" tool, tachometer, test light, ohmmeter, digital voltmeter with 10 megohms impedance (J-29125A, J-34029A or equivalent), vacuum gage and jumper wires for diagnosis. A test light or voltmeter must be used when specified in the procedures. See Figures 9 through 13 for Special Tools needed to diagnosis or repair a system. For more complete information on the operation of these tools, consult the tool manufacturer's instructions.

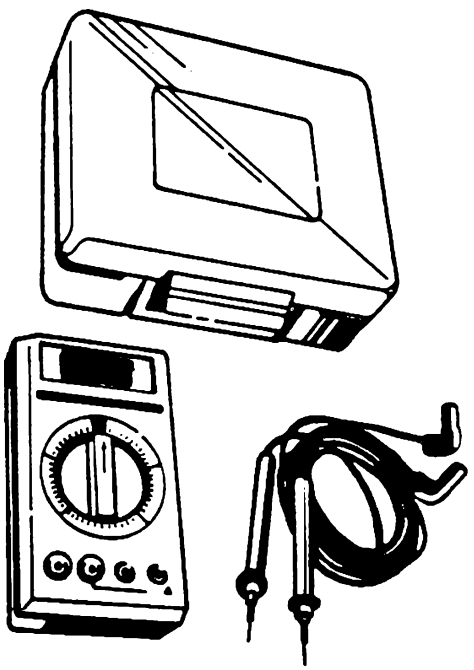

HIGH IMPEDANCE MULTIMETER
(DIGITAL VOLTMETER-DVM)
J34029-A

VOLTMETER - Voltage position measures magnitude of voltage when connected in parallel to an existing circuit. A digital voltmeter with a 10 meg ohm input impedance is used because this type of meter will not load down the circuit and result in faulty readings. Some circuits require accurate low voltage readings because they have a very high resistance .

AMMETER - When used as an ammeter, this meter accurately measures extremely low current flow. Refer to meter instructions for more information.

- Selector must be set properly for both function and range. DC is used for most automotive measurements.

OHMMETER - Measures resistance of circuit directly in ohms. Refer to meter instructions for more information.

- OL display in all ranges indicates open circuit.
- Zero display in all ranges indicates a short circuit.
- An intermittent connection in a circuit may be indicated by a digital reading that will not stabilize on the circuit.
- Range Switch.
  - ☐ 200Ω – Reads ohms directly
  - 2K,20K,200KΩ – Reads ohms in thousands
  - 2M and 20MΩ - Reads ohms in millions

J23738

VACUUM PUMP WITH GAGE (20 IN. HG. MINIMUM)
Use the gage to monitor manifold engine vacuum and use the hand pump to check vacuum sensors, solenoids and valves.

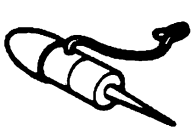

J34142-A

UNPOWERED TEST LIGHT
Used for checking wiring for complete circuit, short to ground, or voltage.

TACHOMETER
Must have inductive trigger signal pickup.

10-28-87
*7S 3382-6E

J29533A/BT8127	**OXYGEN SENSOR WRENCH** Used for removing or installing the oxygen sensor.
J33031/BT8130	**IDLE AIR CONTROL WRENCH** Used for removing or installing IAC valve on throttle body.
J34730-A	**PORT FUEL INJECTION DIAGNOSTIC KIT** Used to diagnose port fuel injection systems. The kit includes: • Fuel Pressure Gage - used for checking fuel pump pressure and compare injector pressure drop for equal fuel distribution. • Injector Test Light - used for checking electrical circuit to an injector. • Injector Tester - used for energizing each fuel injector for a precise amount of time to perform injector balance test.
J34730-1	**FUEL PRESSURE GAGE** Used for checking and monitoring fuel line pressure of port fuel system. Part of Diagnostic Kit J34730-A.
J34730-2	**INJECTOR TEST LIGHT** Used for checking the electrical circuit to a port fuel injector. Part of Diagnostic Kit J34730-A.
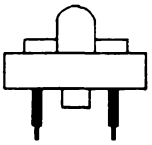 BT8320	**INJECTOR TEST LIGHT** Used for checking the electrical circuit to a TBI fuel injector (except TBI 700).
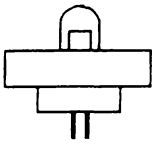 BT8329A	**INJECTOR TEST LIGHT** Used for checking the electrical circuit to a TBI 700 fuel injector and a port fuel injector.

10-23-87
7S 3396-6E

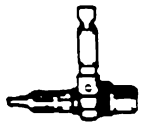 J26792/BT7220-1	**SPARK TESTER** Used for checking available secondary ignition voltage. Also called an ST125.
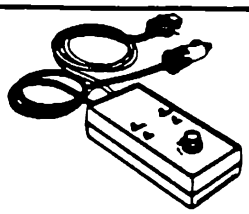 J36101	**MASS AIR FLOW (MAF) SENSOR TESTER** Used for static test of MAF Sensor on vehicles equipped with an AC type MAF Sensor.
J36179	**CRANKSHAFT SENSOR ALIGNMENT TOOL (C3I SYSTEMS)** Used for properly aligning crank or combination sensor to harmonic balancer interrupter.
J35616	**CONNECTOR TEST ADAPTER KIT** Used for making electrical test connections in current Weather Pack, Metri-Pack and Micro-Pack style terminals.
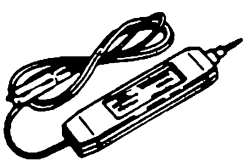 J34636	**CIRCUIT TESTER** Used for checking all relays and solenoids before connecting them to a new ECM. Measures the circuit resistance and indicates pass or fail via green or red LED. Amber LED indicates current polarity. Can also be used as a non-powered continuity checker.
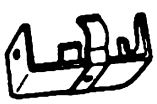 J28687-A/BT8220	**OIL PRESSURE TRANSDUCER WRENCH** Used for removing or installing oil pressure transducer on engine.
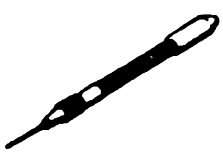 J35689	**METRI-PACK TERMINAL REMOVER** Used for removing 150 series Metri-Pack "pull-to-seat" terminals from connectors. Refer to wiring harness service in Section "6E" for removal procedure.
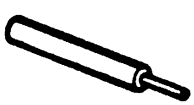 J28742/BT8234-A	**WEATHER PACK TERMINAL REMOVER** Used for removing terminals from Weather Pack connectors. Refer to wiring harness service in Section "6E" for removal procedure.
J33095/BT8234-A	**ECM CONNECTOR TERMINAL REMOVER** Used for removing terminals from Micro-Pack connectors. Refer to wiring harness service Section "6E" for removal procedure. 10-21-87 7S 3384-6E

J34730-3	**INJECTOR TESTER** Used for energizing each fuel injector for a precise amount of time to perform injector balance test. Part of Diagnostic Kit J34730-A.
J29698-A/BT8251	**FUEL LINE WRENCH** Used for disconnecting or connecting fuel lines at throttle body unit by holding fuel nut at throttle body.
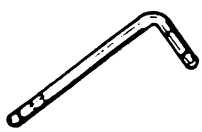 J33179-20	**MINIMUM AIR RATE ADJUSTING WRENCH** Used for adjusting throttle stop screw on TBI unit.
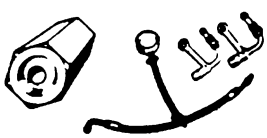 J29658/BT8205	**FUEL PRESSURE GAGE** Used for checking and monitoring fuel line pressure of port fuel system.

10-22-87
8S 4861-6E

GENERAL SPECIFICATIONS

Many of the specifications used in this section are located on the Vehicle Emission Control Information label under the hood.

Listed on the chart below are locations of specifications used in this Section.

SPECIFICATION	LOCATION OF INFORMATION
Engine Timing	Vehicle Emission Control information label.
Idle Speed, ECM Controlled	Not adjustable. ECM controls idle.
Spark Plug Type	Owner's Manual, Section "7".
Spark Plug Gap	Vehicle Emission Control Information Label.
Engine Code	8th digit of VIN number. Also Owner's Manual, Section "7".
Engine Family	Vehicle Emission Control Information label.
Filter Part Numbers	Owner's Manual, Section "7".
Part Numbers of Major Components	GMSPO Parts Book.
Replacement of Vehicle Emission Control Information Label	GMSPO Label Catalog.

SECTION 6E3

DRIVEABILITY AND EMISSIONS FUEL INJECTION (PORT)

THIS SECTION APPLIES TO:

3.8L TURBO (VIN 7)

CONTENTS

3.8L TURBO (VIN 7)

GENERAL DESCRIPTION		3.8L T (VIN 7)	6E3-2
DIAGNOSIS PROCEDURE		3.8L T (VIN 7)	6E3-2
Section A	Diagnostic Charts and Trouble Codes	3.8L T (VIN 7)	6E3-A-1
Section B	Symptoms	3.8L T (VIN 7)	6E3-B-1
Section C	Component Systems	3.8L T (VIN 7)	6E3-C-1
C1	Electronic Control Module (ECM) and Sensors	3.8L T (VIN 7)	6E3-C1-1
C2	Fuel Metering System	3.8L T (VIN 7)	6E3-C2-1
C3	Evaporative Emission Control System (EECS)	3.8L T (VIN 7)	6E3-C3-1
C4	Ignition System/EST (Distributorless C^3I)	3.8L T (VIN 7)	6E3-C4-1
C5	Electronic Spark Control (ESC) System	3.8L T (VIN 7)	6E3-C5-1
C7	Exhaust Gas Recirculation (EGR) System	3.8L T (VIN 7)	6E3-C7-1
C8	Torque Converter Clutch (TCC) System	3.8L T (VIN 7)	6E3-C8-1
C10	A/C Clutch Circuit Diagnosis	3.8L T (VIN 7)	6E3-C10-1
C12	Electric Cooling Fan	3.8L T (VIN 7)	6E3-C12-1
C13	Positive Crankcase Ventilation (PCV)	3.8L T (VIN 7)	6E3-C13-1
INDEX		END OF SECTION	

ALL NEW GENERAL MOTORS VEHICLES ARE CERTIFIED BY THE UNITED STATES ENVIRONMENTAL PROTECTION AGENCY AS CONFORMING TO THE REQUIREMENTS OF THE REGULATIONS FOR THE CONTROL OF AIR POLLUTION FROM NEW MOTOR VEHICLES. THIS CERTIFICATION IS CONTINGENT ON CERTAIN ADJUSTMENTS BEING SET TO FACTORY STANDARDS. IN MOST CASES, THESE ADJUSTMENT POINTS EITHER HAVE BEEN PERMANENTLY SEALED AND/OR MADE INACCESSIBLE, TO PREVENT INDISCRIMINATE OR ROUTINE ADJUSTMENT IN THE FIELD. FOR THIS REASON, THE FACTORY PROCEDURE FOR TEMPORARILY REMOVING PLUGS, CAPS, ETC., FOR PURPOSES OF SERVICING THE PRODUCT, MUST BE STRICTLY FOLLOWED AND, WHEREVER PRACTICABLE, RETURNED TO THE ORIGINAL INTENT OF THE DESIGN.

INTRODUCTION

GENERAL DESCRIPTION

This section applies to engines with "Port Fuel Injection" (PFI) fuel delivery systems. PFI engines have a fuel injector in the intake manifold near the intake valve for each cylinder.

PFI engines have controls that reduce exhaust emissions, and maintain good driveability and fuel economy.

The engine control module (ECM) is the heart of this control system. A network of sensors provides the ECM with information about engine operation and the various systems it controls. Details of basic operation, diagnosis, functional checks, and on-vehicle service are covered in Section "C", component systems.

The ECM has the ability to do some diagnosis of itself, as well as other parts of the system. When the ECM finds a problem, it lights a "Service Engine Soon" light on the instrument panel and a trouble code is stored in the ECM memory. The "Service Engine Soon" light does not indicate that the engine should be stopped right away, but that the vehicle should be checked as soon as reasonably possible.

DIAGNOSIS PROCEDURE

The following sections are written for specific engine applications and are clearly indentified. Be sure to use only the section which applies to the engine family being diagnosed.

Before using this section of the manual, you should be familiar with the information and the proper diagnosing procedures that are described in Section "6E". If the proper diagnosis procedures are not followed, as described in Section "6E", it may result in unnecessary replacement of good parts.

Trouble tree charts incorporate diagnosis procedures using an ALDL "Scan" tool whenever possible. Using a "Scan" tool saves time in diagnosis and prevents the replacement of good parts.

The key to using a "Scan" tool successfully for diagnosis lies in the technician's ability to understand the system he is trying to diagnose, as well as having an understanding of the "Scan" tool's limitations. See Section "6E" for more information.

SECTION A
3.8L Turbo Engine

DIAGNOSTIC CIRCUIT CHECK

The "Diagnostic Circuit Check" verifies the system is functioning correctly. Some special considerations to keep in mind while making the "Diagnostic Circuit Check" are:

Blocking Drive Wheels

The vehicle drive wheels must always be blocked while checking the system.

Cold Oxygen Sensor

On some engines, the oxygen sensor may cool down after only a short period of operation at idle. This will put the system into "Open Loop". To restore "Closed Loop" operation, run the engine at part throttle several minutes and accelerate from idle to part throttle a few times.

BASIC PROCEDURE

If you have not reviewed the Basic Information on how to use the Diagnostic Procedures, go to the "Introduction" of this section. The facing page of each chart in this section will provide a general circuit description and in some instances, alternate diagnostic steps or other diagnostic aids specific to that chart or circuit.

SECTION A
ENGINE COMPONENTS / WIRING DIAGRAMS / DIAGNOSTIC CHARTS

Composite View ..... Page A-2
Component Locations ..... Page A-3
ECM Wiring Diagrams ..... Page A-4
ECM Connector Terminal End View ..... Page A-8
Diagnostic Circuit Check ..... Page A-9
"Scan" Data ..... Page A-9
No "Service Engine Soon" Light - Chart A-1 ..... Page A-12
No ALDL Data or Will Not Flash Code 12; "Service Engine Soon" Light On Steady - Chart A-2 . Page A-14
Engine Cranks But Will Not Run "Type I C3I" - Chart A-3 ..... Page A-16
Fuel Pump Relay Circuit - Chart A-5 ..... Page A- 22
Fuel System Pressure Test - Chart A-7 ..... Page A-24
Code 13 - Oxygen Sensor Circuit (Open Circuit) ..... Page A-28
Code 14 - Coolant Temperature Sensor Circuit (High Temperature Indicated) ..... Page A-30
Code 15 - Coolant Temperature Sensor Circuit (Low Temperature Indicated) ..... Page A-32
Code 21 - Throttle Position Sensor (TPS) Circuit (Signal Voltage High) ..... Page A-34
Code 22 - Throttle Position Sensor (TPS) Circuit (Signal Voltage Low) ..... Page A-36
Code 23 - Manifold Air Temperature (MAT) Sensor Circuit (Low Temperature Indicated) ... Page A-38
Code 24 - Vehicle Speed Sensor (VSS) Circuit ..... Page A-40
Code 25 - Manifold Air Temperature (MAT) Sensor Circuit (High Temperature Indicated) .. Page A-42
Code 31 - Wastegate Solenoid Electrical ..... Page A-44
Code 32 - Exhaust Gas Recirculation (EGR) Circuit ..... Page A-46
Code 33 - Mass Air Flow (MAF) Sensor Circuit (GM/SEC High) ..... Page A-48
Code 34 - Mass Air Flow (MAF) Sensor Circuit (GM/SEC Low) ..... Page A-50
Code 41 - CAM Sensor Circuit ..... Page A-52
Code 42 - C3I,EST or Bypass Circuit Failure ..... Page A-54
Code 43 - Electronic Spark Control (ESC) Circuit ..... Page A-56
Code 44 - Oxygen Sensor Circuit (Lean Exhaust Indicated) ..... Page A-58
Code 45 - Oxygen Sensor Circuit (Rich Exhaust Indicated) ..... Page A-60
Code 51 - PROM Error (Faulty or Incorrect PROM) ..... Page A-62
Code 52 - Calpak Error (Faulty or Incorrect Calpak) ..... Page A-62
Code 55 - ECM Error ..... Page A-62

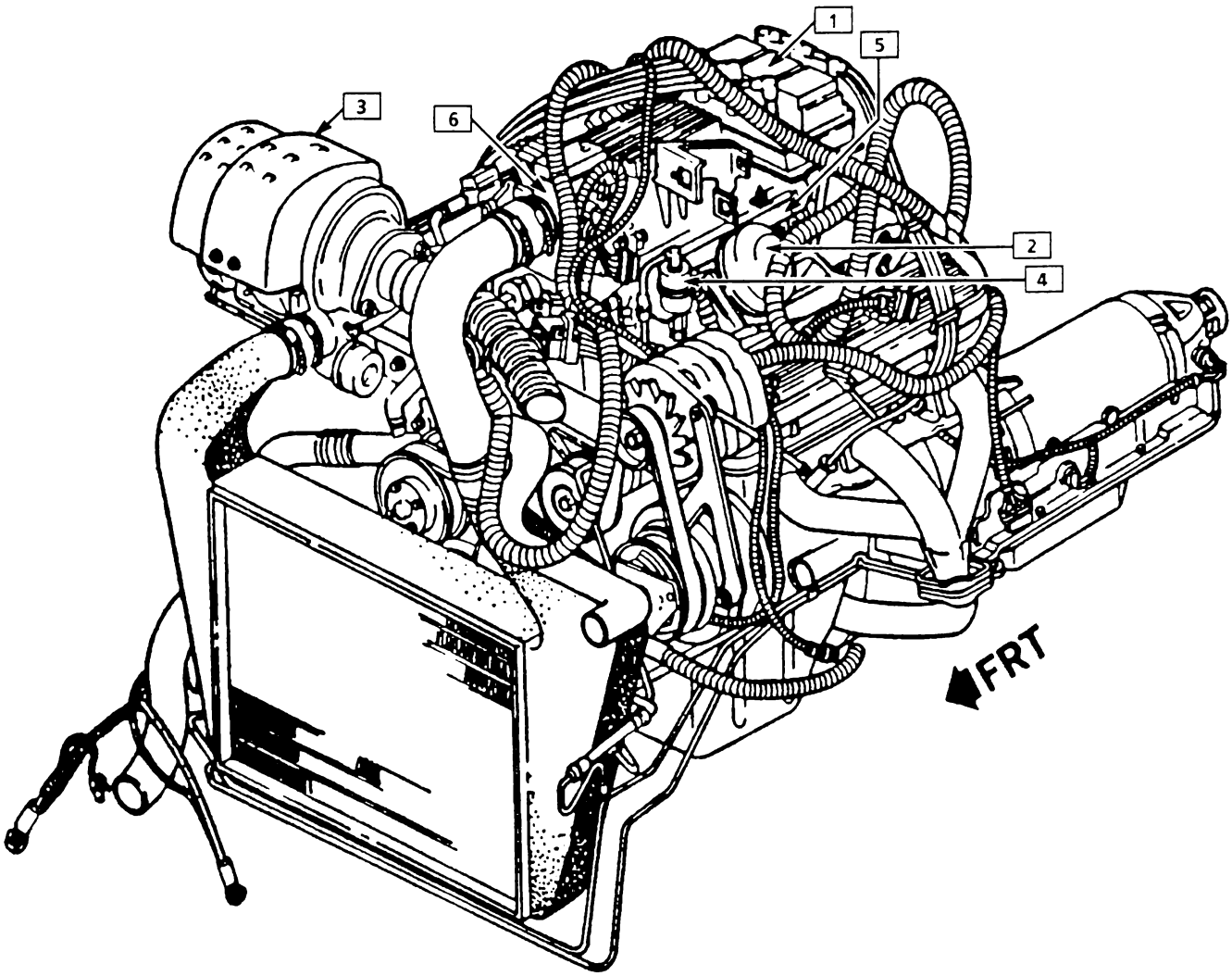

1 C^3I ASSEMBLY
2 EGR VALVE
3 TURBO ASSEMBLY
4 PRESSURE REGULATOR
5 FUEL RAIL
6 THROTTLE BODY

10-5-88
95 6077-6E

Figure A-1 - Composite View - 3.8L Turbo "F" Carline

'F' CARLINE RPO: LC2 VIN CODE: 7 3.8LT V6 PFI

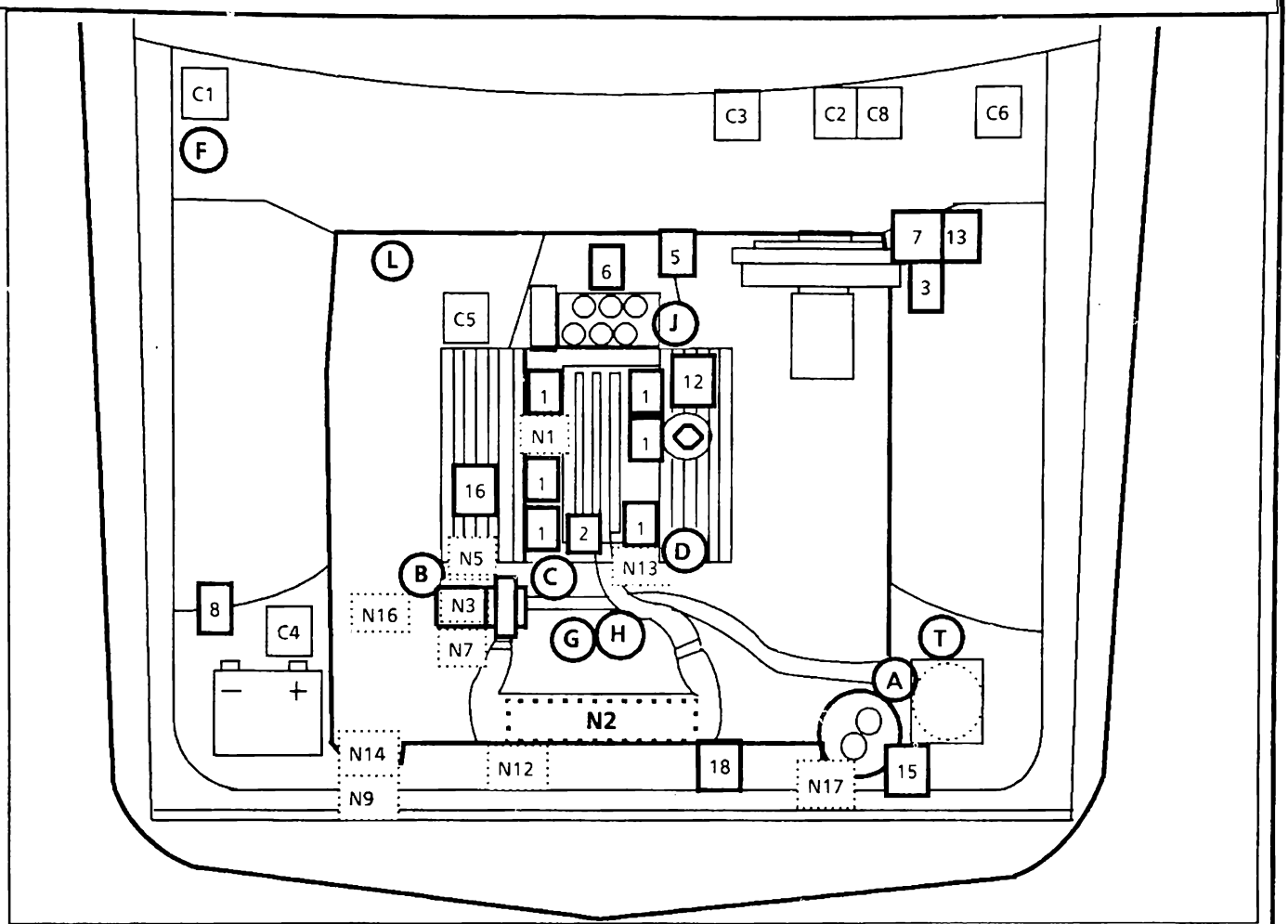

COMPUTER HARNESS

- C1 Electronic Control Module (ECM)
- C2 ALDL diagnostic connector
- C3 "SERVICE ENGINE SOON" light
- C4 ECM power feed connector
- C5 ECM harness grounds
- C6 Fuse panel
- C8 Fuel pump test connector (Terminal "G" of ALDL connector)

NOT ECM CONNECTED

- N1 Crankcase vent valve (PCV)
- N2 Intercooler
- N3 Turbocharger
- N5 Engine temp. sensor (gage overheat)
- N7 Oil pressure sensor (gage) and switch (fuel pump)
- N9 Fan delay timer
- N12 Primary cooling fan
- N13 Cooling fan temperature switch
- N14 Primary cooling fan relay
- N16 A/C head pressure switch
- N17 Fuel vapor canister

CONTROLLED DEVICES

- 1 Fuel injector
- 2 Idle air control motor
- 3 Fuel pump relay
- 5 Torque converter clutch connector
- 6 Comp. controlled coil ignition (C^3I)
- 7 Electronic spark control module
- 8 Secondary cooling fan relay
- 12 EGR solenoid
- 13 A/C clutch control relay
- 15 Fuel vapor canister solenoid
- 16 Wastegate solenoid
- 18 Secondary cooling fan

INFORMATION SENSORS

- A Mass air flow
- B Exhaust oxygen
- C Throttle position
- D Coolant temperature
- F Vehicle speed (buffer)
- G Camshaft position (C^3I)
- H Crankshaft Pos. Reference/RPM (C^3I)
- J ESC Knock Sensor
- L Turbo boost
- T Manifold air temperature

10-4-88

*8E 4274-6E

Figure A-2 Component Locations (3.8L) Turbo "F" Carline

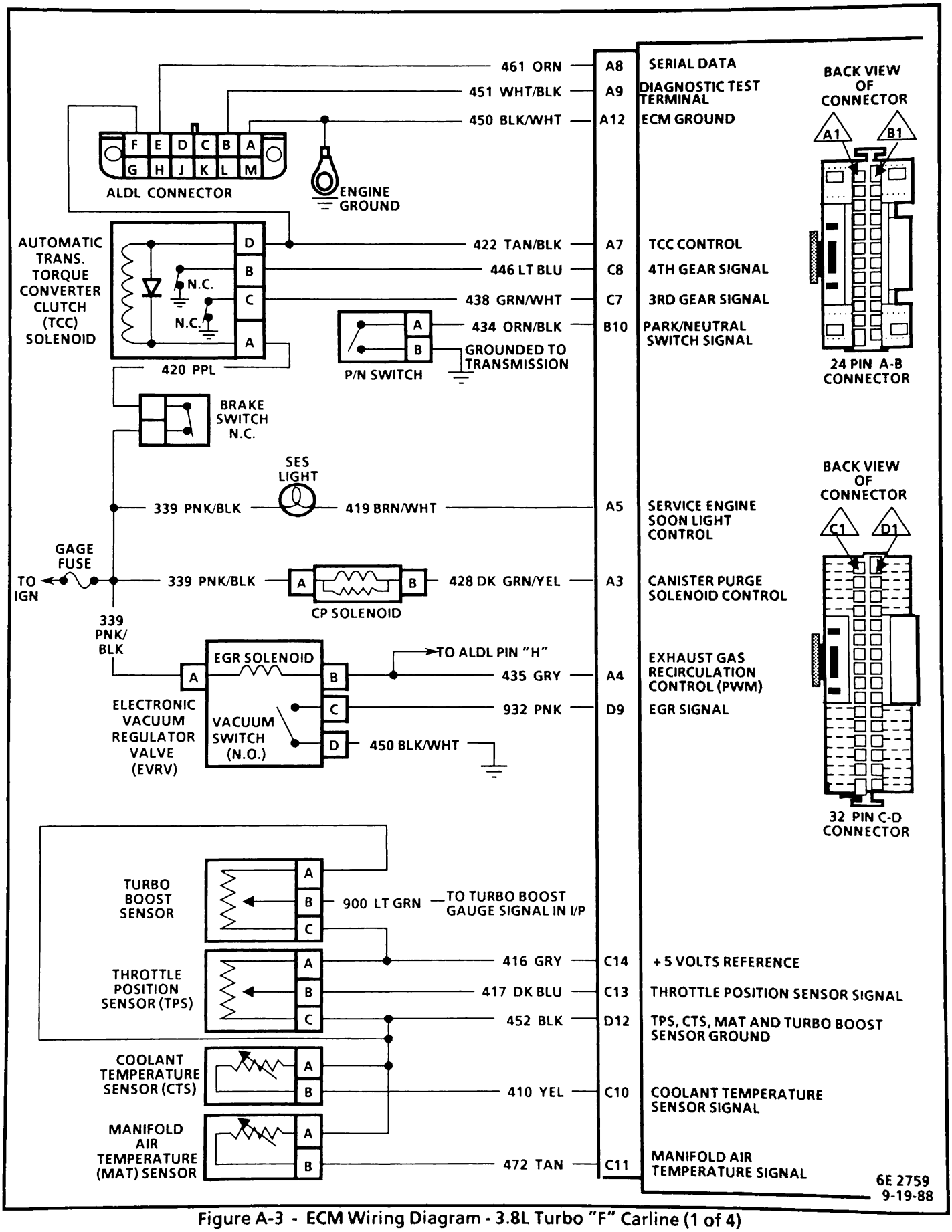

Figure A-3 - ECM Wiring Diagram - 3.8L Turbo "F" Carline (1 of 4)

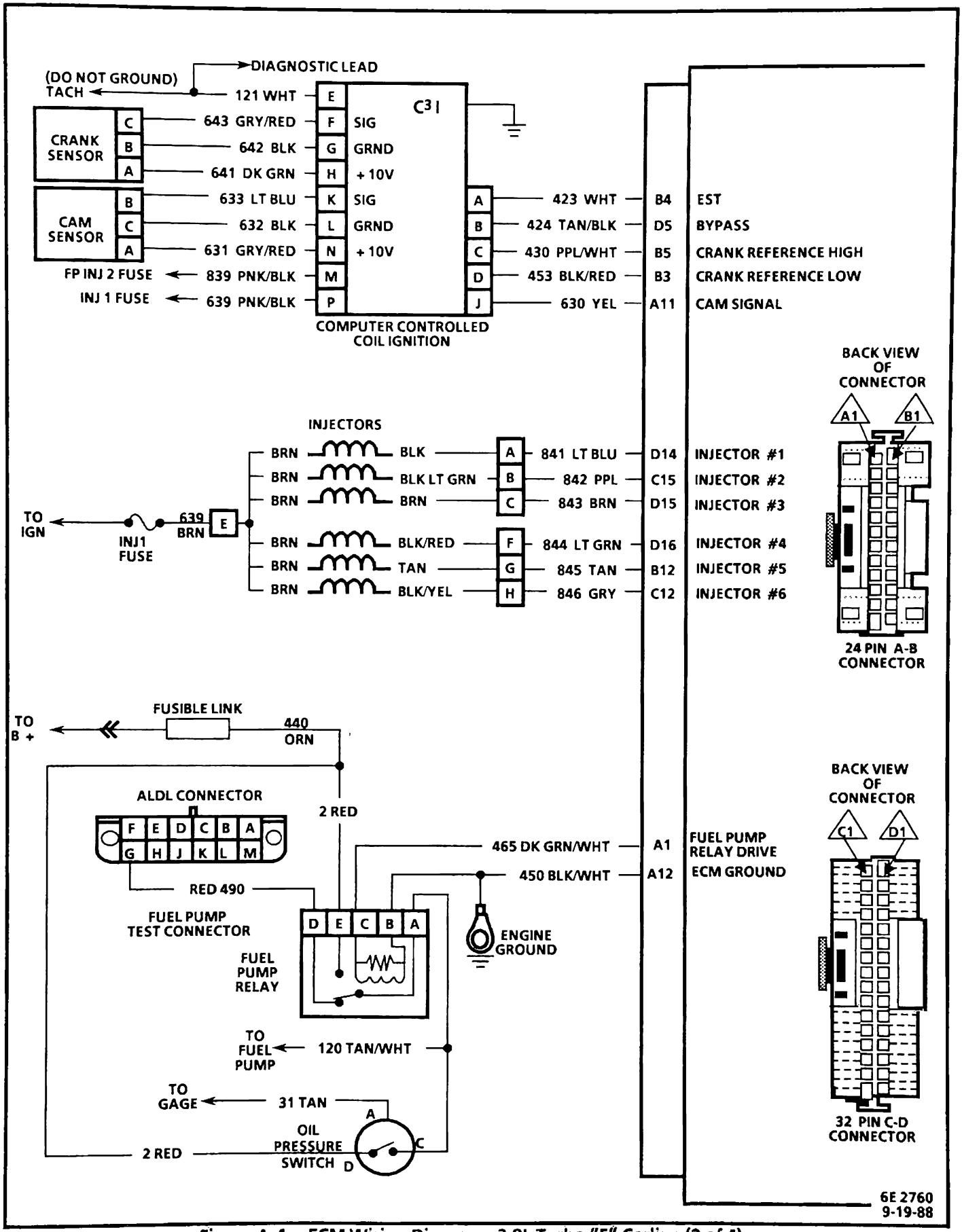

Figure A-4 - ECM Wiring Diagram - 3.8L Turbo "F" Carline (2 of 4)

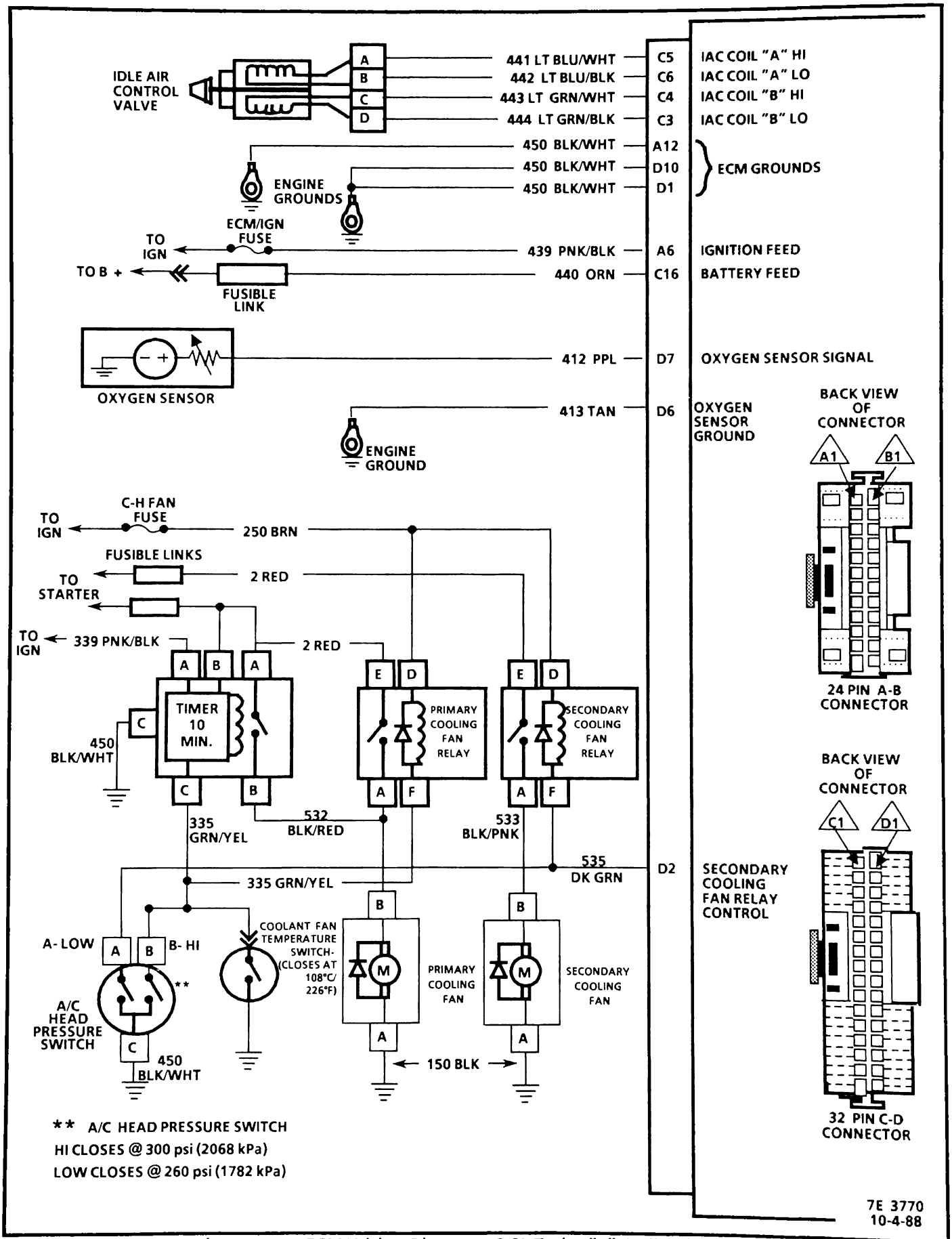

Figure A-5 - ECM Wiring Diagram - 3.8L Turbo "F" Carline (3 of 4)

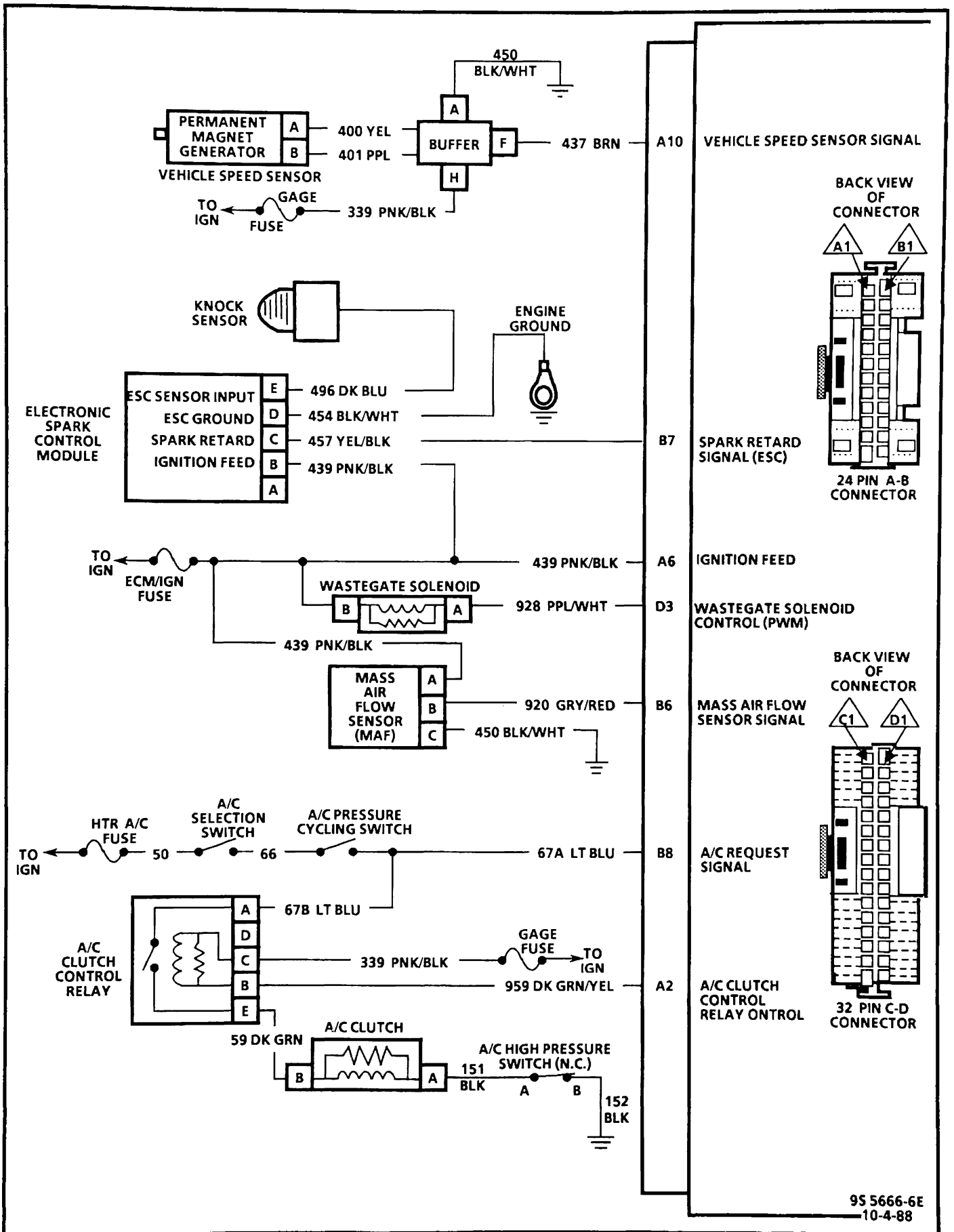

Figure A-6 - ECM Wiring Diagram - 3.8L "F" Carline (4 of 4)

FUEL INJECTION ECM CONNECTOR IDENTIFICATION

This ECM voltage chart is for use with a digital voltmeter to further aid in diagnosis. The voltages you get may vary due to low battery charge or other reasons, but they should be very close.

B + in chart refers to system voltage

THE FOLLOWING CONDITIONS MUST BE MET BEFORE TESTING:

• Engine at operating temperature • Engine idling in "Closed Loop" (for "Engine Run" column) in park or neutral • Diagnostic "Test" terminal not grounded • ALDL tool not installed

	VOLTAGE KEY "ON"	VOLTAGE ENG. RUN	CIRCUIT	PIN	WIRE COLOR
5	0*	B +	FUEL PUMP RELAY DRIVE	A1	DK GRN/ WHT
	B +	"ON" 0* "OFF" B +	A/C CLUTCH CONTROL RELAY	A2	DK GRN/ YEL
	B +	B +	CANISTER PURGE SOL. CONTROL	A3	DK GRN/ YEL
	B +	B +	EGR CONTROL (PWM)	A4	GRY
	0*	B +	"SERVICE ENGINE SOON" LIGHT	A5	BRN/ WHT
	B +	B +	IGNITION FEED	A6	PNK/ BLK
	B +	B +	TCC CONTROL	A7	TAN/ BLK
2	4.30	2-5	SERIAL DATA	A8	ORN
	5.0	5.0	DIAGNOSTIC TEST TERMINAL	A9	WHT/ BLK
1	0*	0*	VEHICLE SPEED SENSOR SIGNAL	A10	BRN
7	0* B +	10	CAM SIGNAL	A11	YEL
	0*	0*	ECM GROUND	A12	BLK/ WHT

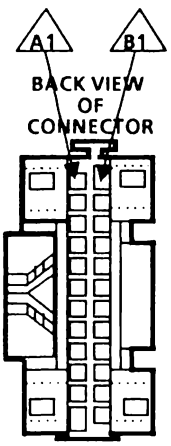

24 PIN A-B CONNECTOR

WIRE COLOR	PIN	CIRCUIT	VOLTAGE KEY "ON"	VOLTAGE ENG. RUN	
	B1	NOT USED			
	B2	NOT USED			
BLK/ RED	B3	CRANK REFERENCE LOW	0*	0*	
WHT	B4	EST	0*	1.2	
PPL/ WHT	B5	CRANK REFERENCE HIGH	0* B +	6.0	7
GRY/ RED	B6	MASS AIR FLOW SENSOR SIGNAL	2.50	2.48	
YEL/ BLK	B7	SPARK RETARD SIGNAL (ESC)	9.16	9.26	
LT BLU	B8	A/C REQUEST "ON" SIGNAL "OFF"	B + 0*	B + 0*	
	B9	NOT USED			
ORN/ BLK	B10	PARK/NEUTRAL SWITCH SIGNAL	0*	0*	6
	B11	NOT USED			
TAN	B12	INJECTOR #5 DRIVE	B +	B +	

		NOT USED	C1	
		NOT USED	C2	
NOT USEABLE		IAC "B" LO	C3	LT GRN/ BLK
NOT USEABLE		IAC "B" HI	C4	LT GRN/ WHT
NOT USEABLE		IAC "A" HI	C5	LT BLU/ WHT
NOT USEABLE		IAC "A" LO	C6	LT BLU/ BLK
0*	0*	3 RD GEAR SIGNAL	C7	GRN/ WHT
0*	0*	4TH GEAR SIGNAL	C8	LT BLU
		NOT USED	C9	
3 2.04	2.18	CTS SIGNAL	C10	YEL
3 2.46	2.09	MAT SENSOR SIGNAL	C11	TAN
B +	B +	NJECTOR #6 DRIVE	C12	GRY
.35 .45	.35 45	TPS SIGNAL	C13	DK BLU
5.0	5.0	+5 VOLTS REFERENCE	C14	GRY
B +	B +	INJECTOR #2 DRIVE	C15	PPL
B +	B +	BATTERY	C16	ORN

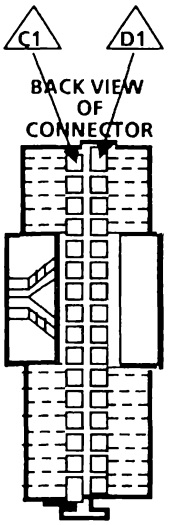

32 PIN C-D CONNECTOR

BLK/ WHT	D1	ECM GROUND	0*	0*
DK GRN	D2	COOLING FAN RELAY CONTROL	B + B +	0* "ON" B + "OFF"
PPL/ WHT	D3	WASTEGATE SOLENOID CONTROL	B +	B +
	D4	NOT USED		
TAN/ BLK	D5	BYPASS	0*	4.55
TAN	D6	OXYGEN SENSOR GROUND	0*	0*
PPL	D7	OXYGEN SENSOR SIGNAL	0*	0*
	D8	NOT USED		
PNK	D9	EGR SIGNAL	B +	B +
BLK/ WHT	D10	ECM GROUND	0*	0*
	D11	NOT USED		
BLK	D12	TPS/CTS/MAT SENSOR GROUND	0*	0*
	D13	NOT USED		
LT BLU	D14	INJECTOR #1 DRIVE	B +	B +
BRN	D15	INJECTOR #3 DRIVE	B +	B +
LT GRN	D16	INJECTOR #4 DRIVE	B +	B +

∇ Less than 1 volt.
* Less than .5 volt.
1. Varies from .60 to battery voltage depending on position of drive wheels.
2. Varies
3. Varies with temperature.
4. Battery voltage for first two seconds.
5. Battery voltage when fuel pump is running
6. Reads battery voltage when in gear.
7. Depends on position of vane in relation to "hall-effect" switch. Voltage will be low when vane is passing through switch.

ENGINE 3.8L TURBO

CARLINE "F"

9-19-88
4E 0985-6E

Figure A-7 - ECM Connector Terminal End View

DIAGNOSTIC CIRCUIT CHECK

The Diagnostic Circuit Check is an organized approach to identifying a problem created by an Electronic Engine Control System malfunction. The Diagnostic Circuit Check must be the starting point for any driveability complaint diagnosis because it directs the Service Technician to the next logical step in diagnosing the complaint.

The "Scan Data" listed in the table may be used for comparison, after completing the Diagnostic Circuit Check and finding the on-board diagnostics functioning properly and no trouble codes displayed. The "Typical Data Values" are an average of display values recorded from normally operating vehicles and are intended to represent what a normally functioning system would display.

A "SCAN" TOOL THAT DISPLAYS FAULTY DATA SHOULD NOT BE USED, AND THE PROBLEM SHOULD BE REPORTED TO THE MANUFACTURER. THE USE OF A FAULTY "SCAN" CAN RESULT IN MISDIAGNOSIS AND UNNECESSARY PARTS REPLACEMENT.

Only the parameters listed below are used in this manual for diagnosis. If a "Scan" reads other parameters, the values are not recommended by General Motors for use in diagnosis. For more description on the values and use of the "Scan" tool to diagnose ECM inputs, refer to the applicable diagnosis section in Section "C". If all values are within the range illustrated, refer to "Symptoms" in Section "B".

"Scan" DATA
3.8L TURBO

Idle / Upper Radiator Hose Hot / Closed Throttle / Park or Neutral / Closed Loop / Acc. off

"SCAN" Position	Units Displayed	Typical Data Values
Engine Speed	RPM	Varies
Coolant Temp.	C° F°	85° - 105°
Mani Air Temp.	C° F°	Varies with Air Temperature
Airflow	Gm/Sec	4 - 7
Oxygen Sensor	Millivolts	Varies
Throt. Position	Volts	.35-.45
Idle Air Control	Counts (steps)	10 - 50
Park/Neutral	P/N and RDL	P-N
Fuel Integrator	Counts	118 - 138
Block Learn	Counts	118 - 138
Open/Closed Loop	Open/Closed	Closed Loop (may go open with extended idle)
Vehicle Speed	MPH KPH	0 (Zero)
Torque Conv. Cl.	On/Off	Off/ (On with TCC commanded)
Spark Advance	Degrees	Varies
Knock Signal	No/Yes	No(Yes when Knock Sensor detects detonation)
3rd Gear Switch	Yes/No	No (Yes when in 3rd Gear)
4th Gear Switch	Yes/No	No (Yes when in 4th Gear)
A/C Request	Yes/No	No (yes, with A/C requested)
PROM I.D.	Numbers	Internal I.D. Only
LV8 Engine Load	0	30 - 40

The above parameters are available in the "Scan" tool "open mode" operation, additional parameters are available in the "diagnostic mode" portion of the "Scan" tool.

DIAGNOSTIC CIRCUIT CHECK

3.8L TURBO "F" CARLINE (PORT)

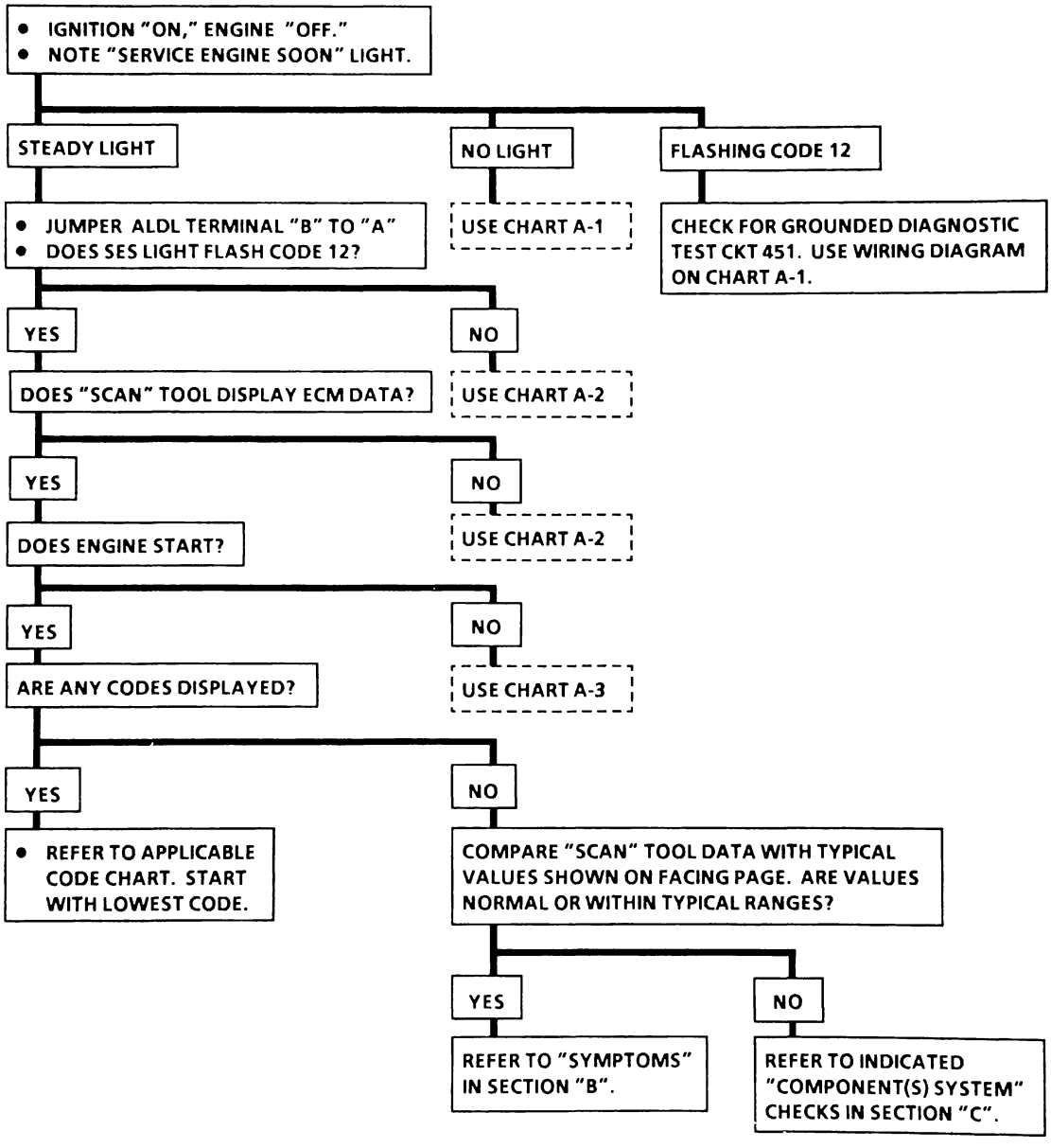

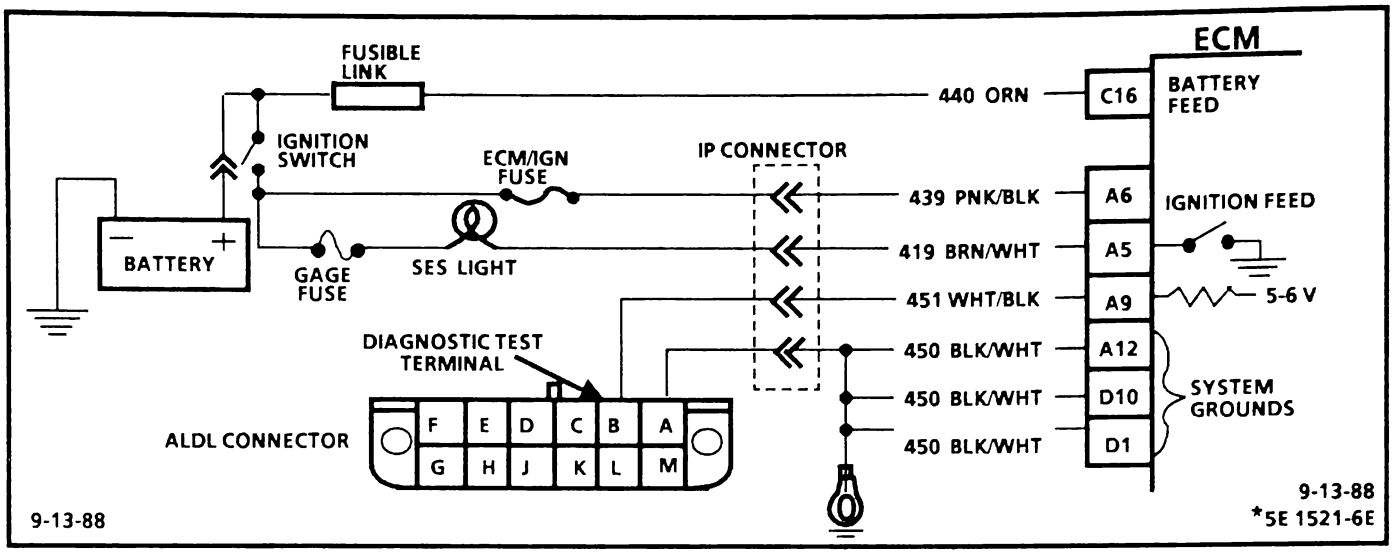

CHART A-1

NO "SERVICE ENGINE SOON" LIGHT
3.8L TURBO "F" CARLINE (PORT)

Circuit Description:

There should always be a steady "Service Engine Soon" light, when the ignition is "ON" and engine stopped. Ignition voltage is supplied directly to the light bulb. The Electronic Control Module (ECM) will control the light and turn it "ON" by providing a ground path through CKT 419 to the ECM.

Test Description:

Numbers below refer to circled numbers on the diagnostic chart.

1. "Service Engine Soon" light should be "ON" as the test light provides the ground.
2. Using a test light connected to 12 volts, probe each of the system ground circuits to make sure a good ground is present. See ECM terminal end view in front of this section for ECM pin locations of ground circuits.

Diagnostic Aids:

Engine runs OK, check:

- Faulty light bulb
- CKT 419 open
- Gage fuse blown, this will result in no oil or generator lights, seat belt reminder, etc.

Engine cranks, but will not run, check:

- Continuous battery - fuse or fusible link open
- ECM Ignition fuse open
- Battery CKT 440 to ECM open.
- Ignition CKT 439 to ECM open
- Poor connection to ECM
- Faulty ECM ground circuit(s).

CHART A-1

NO "SERVICE ENGINE SOON" LIGHT 3.8L TURBO "F" CARLINE (PORT)

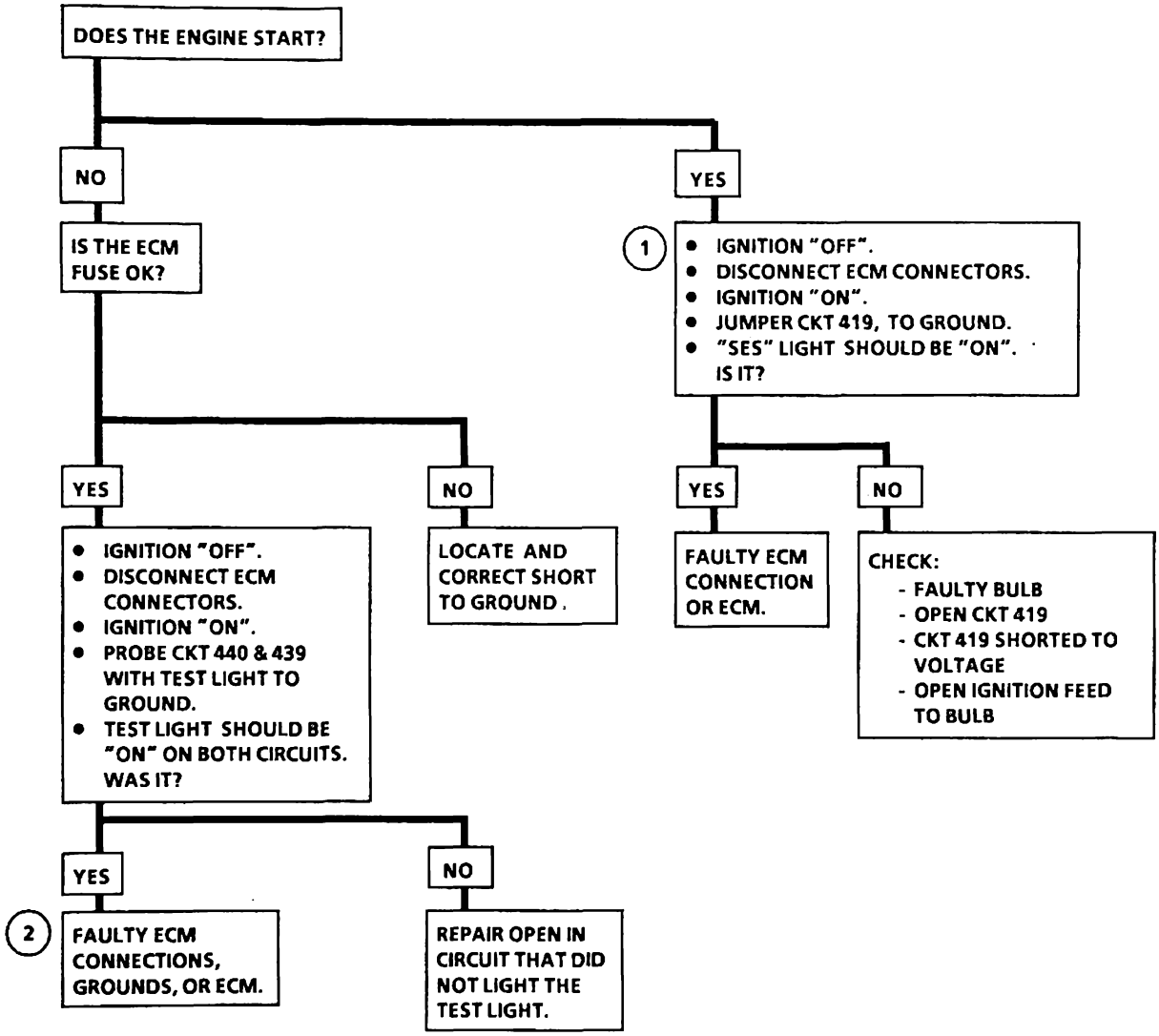

CLEAR CODES AND CONFIRM "CLOSED LOOP" OPERATION AND NO "SERVICE ENGINE SOON" LIGHT.

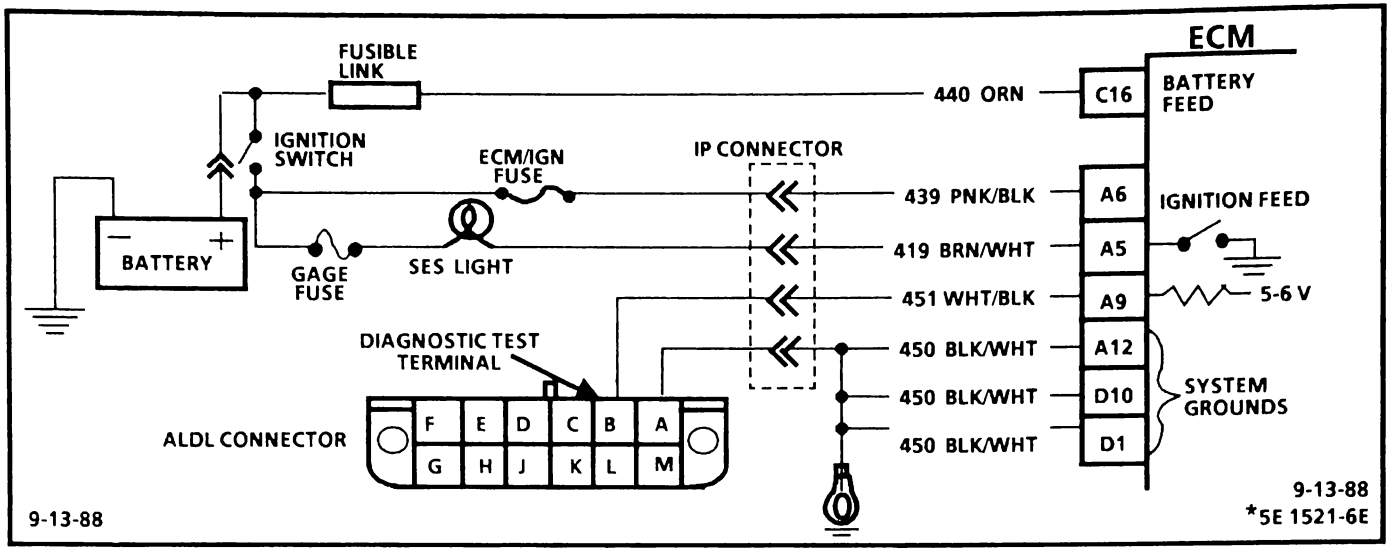

CHART A-2

NO ALDL DATA OR WILL NOT FLASH CODE 12 "SERVICE ENGINE SOON" LIGHT ON STEADY 3.8L TURBO "F" CARLINE (PORT)

Circuit Description:

There should always be a steady "Service Engine Soon" light when the ignition is "ON" and engine stopped. Ignition voltage is supplied directly to the light bulb. The Electronic Control Module (ECM) will turn the light "ON" by grounding CKT 419 at the ECM.

With the diagnostic "test" terminal grounded, the light should flash a Code 12, followed by any trouble code(s) stored in memory.

A steady light suggests a short to ground in the light control CKT 419, or an open in diagnostic CKT 451.

Test Description: Numbers below refer to circled numbers on the diagnostic chart.

1. If there is a problem with the ECM that causes a "Scan" tool to not read Serial data, the ECM should not flash a Code 12. If Code 12 is flashing check for CKT 451 short to ground. If Code 12 does flash, make sure that the "Scan" tool is working properly on another vehicle. If the "Scan" tool is functioning properly and CKT 451 is OK, the PROM or ECM may be at fault for the NO ALDL symptom.
2. If the light goes "OFF" when the ECM connector is disconnected, CKT 419 is not shorted to ground.
3. This step will check for an open diagnostic CKT 451.
4. At this point, the "Service Engine Soon" light wiring is OK. The problem is a faulty ECM or PROM. If Code 12 does not flash, the ECM should be replaced using the original PROM. Replace the PROM only after trying an ECM, as a defective PROM is an unlikely cause of the problem.

CHART A-2

NO ALDL DATA OR WILL NOT FLASH CODE 12 "SERVICE ENGINE SOON" LIGHT ON STEADY 3.8L TURBO "F" CARLINE (PORT)

- IGNITION "ON", ENGINE STOPPED. "SES" LIGHT SHOULD BE "ON". IS IT?

YES

- GROUND DIAGNOSTIC TERMINAL. "SES" LIGHT SHOULD FLASH CODE 12. DOES IT?

NO

1
- IGNITION "OFF".
- DISCONNECT ECM CONNECTORS.
- IGNITION "ON".
- "SERVICE ENGINE SOON" LIGHT SHOULD BE "OFF". IS IT?

YES

3
- IGNITION "OFF".
- RECONNECT ECM.
- IGNITION "ON", ENGINE STOPPED.
- DIAGNOSTIC TERMINAL NOT GROUNDED.
- BACK PROBE ECM CKT 451 WITH TEST LIGHT TO GROUND. IF TEST LIGHT IS "ON", CHECK CKT 451 FOR SHORT TO VOLTAGE.
- "SES" LIGHT SHOULD FLASH CODE 12. DOES IT?

NO

4
- CHECK PROM FOR PROPER INSTALLATION.
- IF OK, REPLACE ECM USING ORIGINAL PROM.
- GROUND ALDL TERMINAL "B".
- "SES" LIGHT SHOULD FLASH CODE 12. DOES IT?

NO

REPLACE PROM

YES

SYSTEM OK

YES

- CHECK FOR OPEN IN CKT 451 BETWEEN ALDL TERM. "B" AND ECM.
- IF OK, CHECK FOR OPEN IN ALDL CKT 450 TO ECM.

NO

SEE CHART A-1

YES

2
- IF PROBLEM WAS NO ALDL DATA:
- CHECK SERIAL DATA CKT 461 FOR OPEN OR SHORT TO GROUND BETWEEN ECM AND ALDL CONNECTOR. IF OK, IT IS A FAULTY ECM OR PROM.

NO

REPAIR SHORT TO GROUND IN CKT 419.

CLEAR CODES AND CONFIRM "CLOSED LOOP" OPERATION AND NO "SERVICE ENGINE SOON" LIGHT.

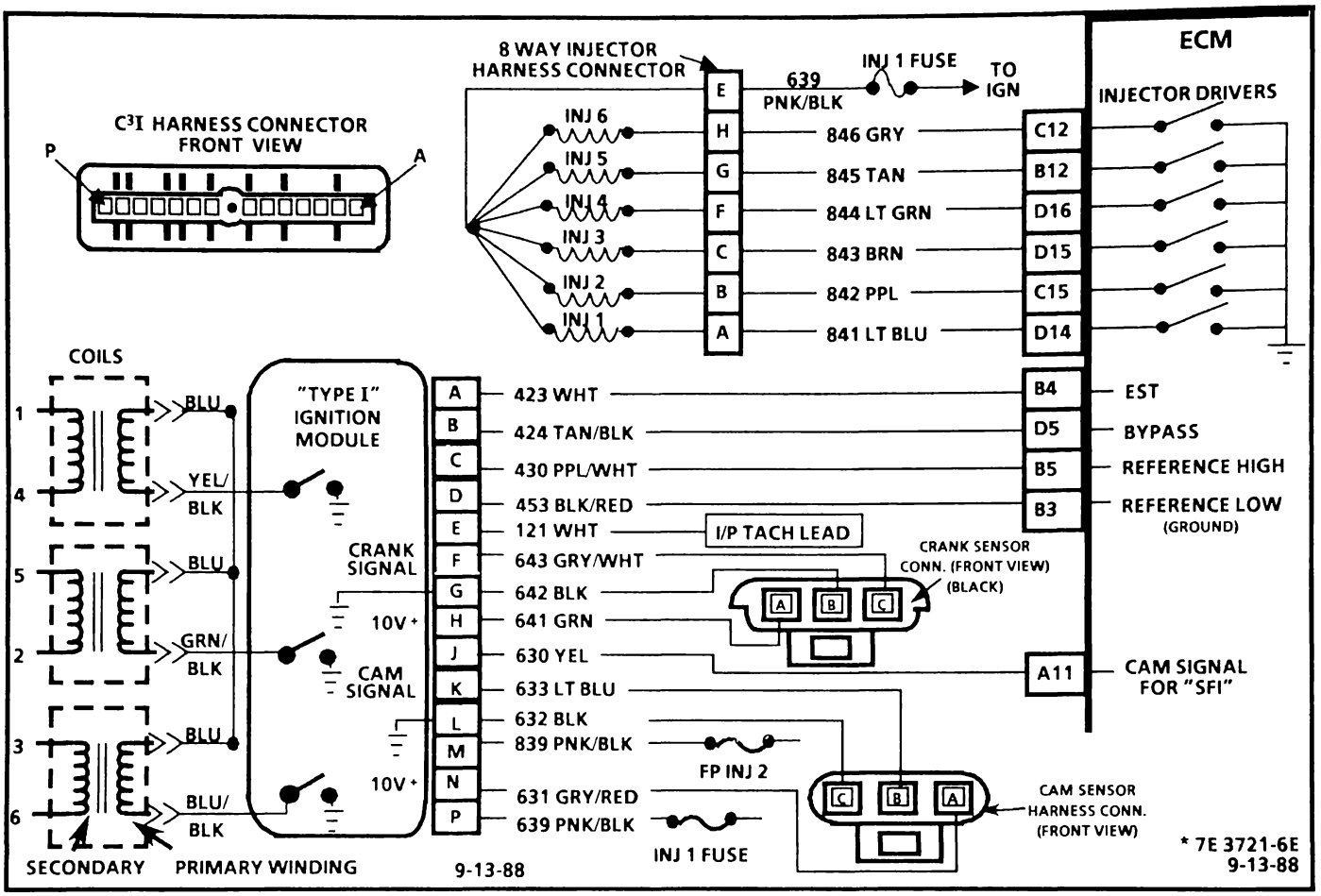

CHART A-3

(Page 1 of 3)

ENGINE CRANKS BUT WILL NOT RUN "TYPE I C3I" 3.8L TURBO "F" CARLINE (PORT)

Circuit Description:

The C3I uses a waste spark method of spark distribution. In this type of ignition system, the ignition module triggers the #1/4 coil pair resulting in both #1 and #4 spark plugs firing at the same time. #1 cylinder is on the compression stroke at the same time #4 is on the exhaust stroke, resulting in a lower energy requirement to fire #4 spark plug. This leaves the remaining high voltage to fire #1 spark plug.

The Sequential Fuel Injection (SFI) type of fuel delivery system utilizes 6 separate injector driver circuits to activate the 6 fuel injectors. While cranking, the ECM activates all 6 injectors simultaneously (all at one time). After a calibrated engine rpm is reached, and a good Cam signal has been received by the ECM, the injection mode of operation is changed to Sequential (timed separately).

Test Description: Numbers below refer to circled numbers on the diagnostic chart.

1. This step verifies "SES" light operation, TPS and CTS signals are normal. A blinking injector test light verifies that the ECM is monitoring the C3I reference signal and attempting to activate the injectors.
2. Both the Camshaft and Crankshaft Sensors have been verified as functioning properly, as is evidenced by the blinking injector test light. A fuel pressure test, at this point, will separate the diagnostic path into either a fuel related fault or ignition system malfunction.
3. The INJ 1 fuse must be removed to avoid flooding of the engine and fouling of the spark plugs. By testing for spark on plug leads 1, 3 and 5, each ignition coil's ability to produce at least 25,000 volts is verified.
4. By testing the problem coil's control circuit with a test light, a determination can be made as to the problem coil being faulty or the module's internal driver for that coil being the source of the complaint.
5. An injector with a resistance value of less than 10 ohms (shorted) could cause repeat ECM failures.
6. Tests for battery voltage on CKT 639. If voltage was present, the "light off" test result was caused by no activation pulse reaching the injector connector from the ECM.

NOTICE; FUEL SYSTEM IS UNDER PRESSURE. TO AVOID FUEL SPILLAGE, REFER TO FUEL PRESSURE RELIEF PROCEDURES IN SECTION "C2" FOR TESTING OR REPAIRS REQUIRING DISASSEMBLY OF FUEL LINES OR FITTINGS.

CHART A-3

(Page 1 of 3)
ENGINE CRANKS BUT WILL NOT RUN "TYPE I C³I" 3.8L TURBO "F" CARLINE (PORT)

MODULE &COIL ASSEMBLY (TOP VIEW)

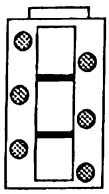

TYPE I

1
- FUEL QUANTITY OK.
- IGNITION ON, THROTTLE CLOSED.
- "SERVICE ENGINE SOON LIGHT" SHOULD BE ON. (IF NOT SEE CHART A-1.
- TPS SHOULD "SCAN" LESS THAN 2.5V. (IF NOT SEE CODE CHART 21)
- COOLANT TEMPERATURE SHOULD "SCAN" BETWEEN -30°C & 130°C. (IF NOT SEE CHART 14 OR 15)
- DISCONNECT ANY INJECTOR CONNECTOR AND INSTALL INJECTOR TEST LIGHT J-34730-2 OR EQUIVALENT IN INJECTOR HARNESS CONNECTOR.
- IF CODE 41 IS DISPLAYED, START TEST AT STEP # 9 ON PAGE 2 OF THIS CHART.
- CRANK ENGINE AND OBSERVE TEST LIGHT. IT SHOULD BLINK . DOES IT?

YES →

2
- IGNITION "OFF", INSTALL FUEL PRESS. GAGE AND NOTE PRESS. AFTER IGNITION IS TURNED ON FOR 2 SECONDS, PRESSURE SHOULD BE 234-276 kPa (34-40 PSI). IS IT?

YES →

3
- REMOVE INJ 1 FUSE.
- CHECK FOR SPARK WITH SPARK TESTER (ST-125) J-26792, OR EQUIV. ON PLUG WIRES 1,3 & 5 ,(ONE AT A TIME) WHILE CRANKING, WITH REMAINING PLUG WIRES STILL CONNECTED.

NO SPARK ON ONE OR TWO WIRES →

4
- VERIFY THAT PLUG WIRE RESISTANCE IS LESS THAN 30K OHMS. (IF NOT, REPLACE)
- REMOVE 6 COIL SCREWS AND TILT COIL ASSEMBLY BACK.
- DISCONNECT THE AFFECTED COIL'S CONTROL WIRE FROM THE MODULE.
- CONNECT A TEST LIGHT BETWEEN THE COMMON FEED (BLUE) AND CONTROL WIRE FOR THE COIL BEING TESTED.
- THE TEST LIGHT SHOULD BLINK WHILE CRANKING ENGINE. DOES IT?

NO →

THE C³I MODULE IS FAULTY. ALSO CHECK PRIMARY COIL RESISTANCE. IF RESISTANCE IS NOT BETWEEN .5 AND .9 OHMS, REPLACE THE COIL AND THE C³I MODULE.

YES →

FAULTY IGNITION COIL CONNECTION OR COIL.

SPARK ON ALL →

CHECK FOR FUEL WET SPARK PLUGS. IF OK, SEE SECTION "6D" ENGINE MECHANICAL.

NO SPARK ON ALL →

CHECK CKT 839 TO C³I TERM. "M" FOR OPEN. IF CKT IS OK, IT'S FAULTY C³I MODULE CONNECTION OR MODULE.

NO PRESSURE →

SEE CHART A-5

INCORRECT PRESSURE →

SEE CHART A-7

NO →

STEADY LIGHT →

5
- CHECK INJECTOR DRIVER CIRCUIT FOR A SHORT TO GROUND.
- IF CKT. IS NOT SHORTED, CHECK RESISTANCE ACROSS INJECTOR .
- RESISTANCE SHOULD BE OVER 10 OHMS. IS IT?

YES →

FAULTY ECM

NO →

FAULTY ECM AND INJECTOR

LIGHT "OFF" →

6
- REMOVE TEST LIGHT.
- PROBE INJECTOR HARNESS POWER TERMINAL AT INJ. WITH A TEST LIGHT TO GROUND.
- TEST LIGHT SHOULD BE ON. IS IT?

NO →

CKT 639 FROM IGN. FEED IS OPEN OR SHORTED TO GND.

YES →

SEE PAGE 2 OF THIS CHART

* INSPECT CRANK SENSOR FOR PROPER GAP (APPROX. .025"), OR SIGNS OF RUBBING. IF RUBBING IS EVIDENT, DETERMINE CAUSE AND REPLACE SENSOR.

CLEAR CODES AND CONFIRM "CLOSED LOOP" OPERATION AND NO "SERVICE ENGINE SOON" LIGHT.

9-13-88
7E 3722-6E

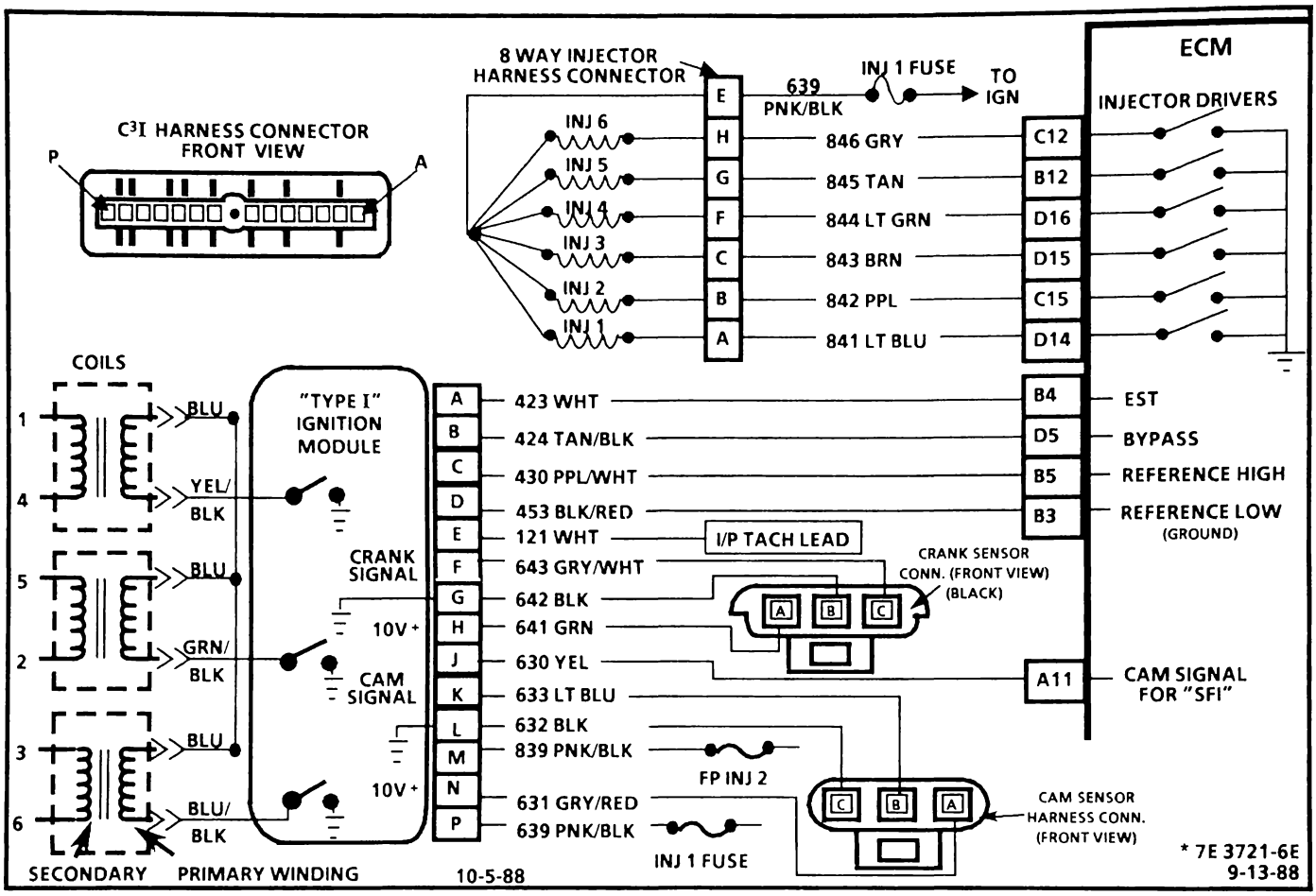

CHART A-3

(Page 2 of 3)
ENGINE CRANKS BUT WILL NOT RUN "TYPE I C3I"
3.8L TURBO "F" CARLINE (PORT)

Circuit Description:

For timing of spark plug firing, a cam sensor "hall effect" switch is used. The cam sensor sends a signal (Sync-Pulse) to the ignition module when cylinder #1 is 25° after top dead center on the compression stroke. This signal is used to start the correct coil firing sequence and to enable sequential fuel injection. The engine will continue to run if the cam signal to the ignition module (CKT 633) is lost while running, however, will not restart after shut down and a Code 41 will be stored.

The crank sensor sends a signal to the ignition module and then to the ECM for reference rpm and crankshaft position. There are three windows in a disc (interruptor) which is mounted to the harmonic balancer. These windows pass by the sensor and as each window passes, the next coil is triggered.

Test Description: Numbers below refer to circled numbers on the diagnostic chart.

7. Verifies ignition feed voltage at terminal "P" of the C3I module. Less than battery voltage would be an indication of a CKT 639 fault.
8. The test light to 12 volts simulates a reference signal to the ECM which will result in an injector test light blink, if CKT 430, the ECM and the injector driver circuits are all OK.
9. If the cam sensor signal circuit terminal "B" is momentarily jumpered to the ground circuit terminal "C" and the engine is cranked, without turning the ignition switch "OFF", the response should be an injector test light blink. This is a result of the artificial "Cam Signal" being transmitted through the C3I module to ECM terminal "A11" and the ECM activating the injector driver circuit.
10. Verifies a proper Cam signal circuit voltage of 6 to 9 volts and a good ground from the C3I module to terminal "C" of the sensor connector.
11. Determines if reason for incorrect voltage reading was due to a fault in CKT 633, an open in CKT 632 or a faulty C3I module.

CHART A-3

(Page 2 of 3)

ENGINE CRANKS BUT WILL NOT "TYPE I C³I" 3.8L TURBO "F" CARLINE (PORT)

FROM CHART A-3 PAGE 1
TEST LIGHT "ON"

MODULE &COIL ASSEMBLY (TOP VIEW)

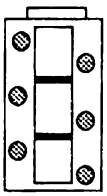

TYPE I

7
- DISCONNECT C³I MODULE 14 PIN CONNECTOR.
- IGNITION "ON", CHECK VOLTAGE AT HARNESS TERMINAL "P".
- READING SHOULD BE APPROX. BATTERY VOLTAGE. IS IT?

YES → **8**

NO → OPEN IN IGNITION FEED CKT 639.

8
- IGNITION "ON", CONNECT A TEST LIGHT TO 12 VOLTS AND REPEATEDLY TOUCH TO C3I MODULE HARN. TERM. "C".
- INJECTOR TEST LIGHT INSTALLED IN ANY INJ. HARN. CONNECTOR SHOULD BLINK WITH EACH TOUCH. DOES IT?

YES → **9**

NO →
- CHECK INJECTOR DRIVER CIRCUIT FROM ECM FOR OPEN OR SHORT TO VOLTAGE.
- IS CIRCUIT OK?

YES → CHECK CKT 430 FOR OPEN OR SHORT TO GROUND OR TO VOLTAGE. IF CKT 430 IS OK, IT'S POOR CONNECTION AT ECM TERM. "B5" OR FAULTY ECM.

NO → REPAIR INJECTOR DRIVER CIRCUIT

FROM STEP #1 FOR CODE 41

9
- RECONNECT 14 PIN C³I MODULE CONNECTOR.
- DISCONNECT *CAM* SENSOR CONNECTOR.
- IGNITION "ON". SEE CAUTION★
- MOMENTARILY JUMPER *CAM* SENSOR HARN. TERMS. "B" TO "C".
- IGN. STILL "ON", CRANK ENGINE, INJ. TEST LIGHT SHOULD BLINK. DOES IT?

NO → **10**

YES →
- CHECK VOLTAGE AT *CAM* SENSOR HARN. TERM. "A".
- SHOULD BE OVER 10 VOLTS. IS IT?

NO → CHECK FOR OPEN POWER FEED CKT 631. IF CIRCUIT IS OK, IT'S FAULTY C³I MODULE CONNECTION OR MODULE.

YES → VERIFY THAT *CAM* SENSOR INTERRUPTOR IS TURNING WHILE CRANKING ENGINE. IF OK, IT'S FAULTY *CAM* SENSOR CONNECTION OR SENSOR.*

10
- CHECK VOLTAGE BETWEEN *CAM* SENSOR HARN. TERMS. "B" AND "C".
- VOLTAGE SHOULD BE 6-9 VOLTS. IS IT?

NO → **11**

YES → SEE PAGE 3 OF THIS CHART

11
- CHECK VOLTAGE FROM *CAM* SENSOR HARNESS TERM. "B" TO GROUND.
- READING SHOULD BE 6 TO 9 VOLTS. IS IT?

NO → CHECK CKT 633 FOR OPEN OR SHORT TO GROUND (IF VOLTAGE WAS ABOVE 9 VOLTS, CHECK FOR A SHORT TO VOLTAGE AND THE POSSIBILITY OF A DAMAGED SENSOR. IF CIRCUIT IS OK, IT'S C³I MODULE CONNECTION OR MODULE.

YES → CHECK CKT 632 FOR OPEN. IF CIRCUIT IS OK, IT'S FAULTY C³I MODULE CONNECTION OR MODULE.

★CAUTION: When jumping sensor terminals, be sure to keep fingers clear of pulleys and belts as a slight movement of belt may occur, resulting in possible injury.

* INSPECT CRANK SENSOR FOR PROPER GAP (APPROX. .025"), OR SIGNS OF RUBBING. IF RUBBING IS EVIDENT, DETERMINE CAUSE AND REPLACE SENSOR.

CLEAR CODES AND CONFIRM "CLOSED LOOP" OPERATION AND NO "SERVICE ENGINE SOON" LIGHT.

9-13-88
7E 3772-6E

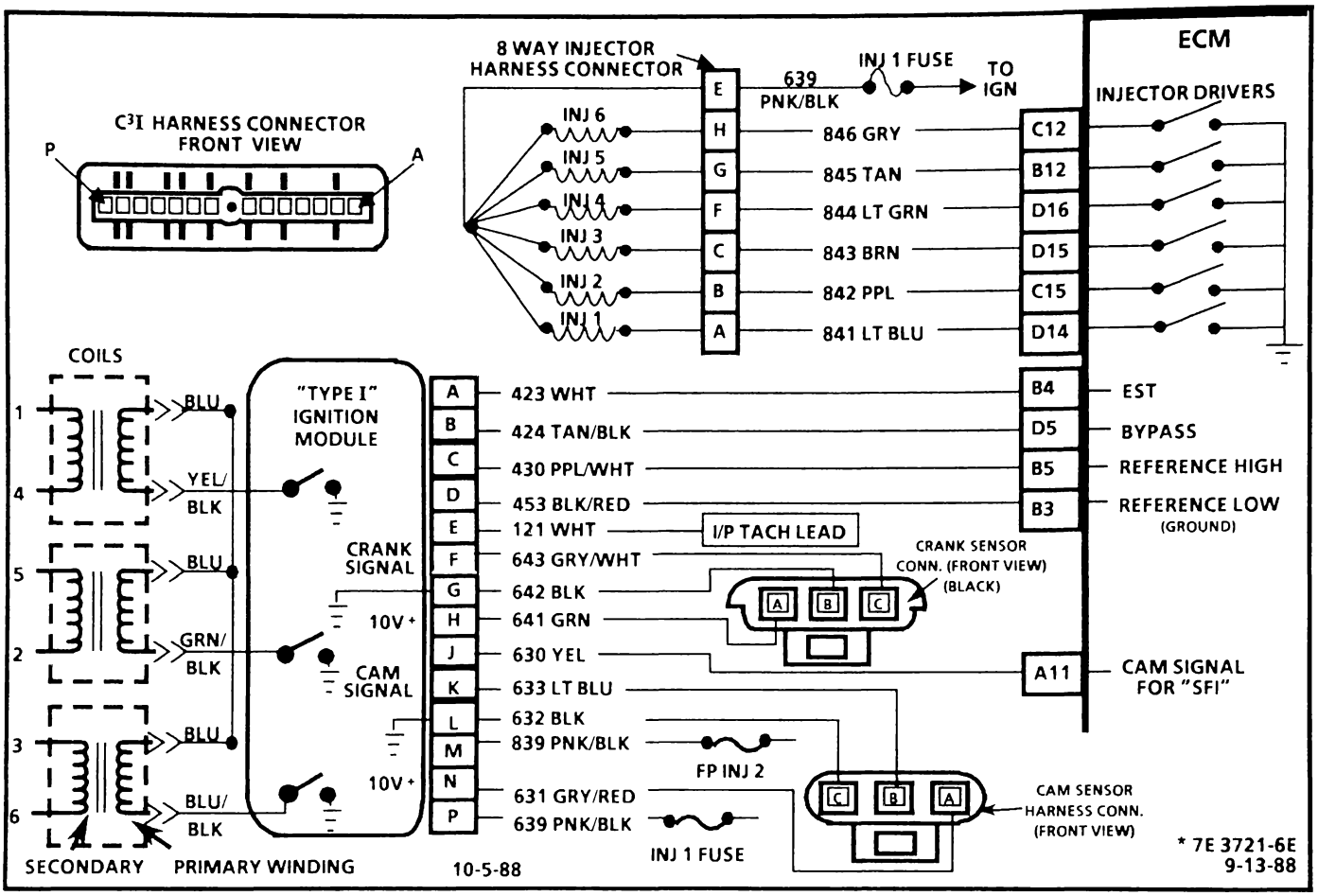

CHART A-3

(Page 3 of 3)

ENGINE CRANKS BUT WILL NOT RUN "TYPE I C3I" 3.8L TURBO "F" CARLINE (PORT)

Circuit Description:

For timing of spark plug firing, a cam sensor "hall effect" switch is used. The cam sensor sends a signal (Sync-Pulse) to the ignition module when cylinder #1 is 25° after top dead center on the compression stroke. This signal is used to start the correct coil firing sequence and to enable sequential fuel injection. The engine will continue to run if the cam signal to the ignition module (CKT 633) is lost while running, however, will not restart after shut down and a Code 41 will be stored.

The crank sensor sends a signal to the ignition module and then to the ECM for reference rpm and crankshaft position. There are three windows in a disc (interruptor) which is mounted to the harmonic balancer. These windows pass by the sensor and as each window passes, the next coil is triggered.

Test Description: Numbers below refer to circled numbers on the diagnostic chart.

12. Jumpering the cam sensor harness terminals "A" and "B" together simulates a cam signal to the C3I module. Then, by repeatedly jumping the crank sensor harness terminals "B" and "C" together a crank signal is simulated which should result in the injector test light blinking.
13. Verifies a proper crank signal circuit voltage of 6 to 9 volts and a good ground from the C3I module to terminal "B" of the crank sensor connector.
14. Determines if reason for incorrect voltage reading was due to a fault in CKT 643, an open in CKT 642 or a faulty C3I module.

CHART A-3

ENGINE CRANKS BUT WILL NOT RUN "TYPE I C³I"

(Page 3 of 3)

3.8L TURBO "F" CARLINE (PORT)

MODULE &COIL ASSEMBLY (TOP VIEW)

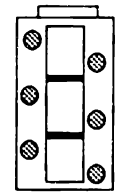

TYPE I

FROM CHART A-3 PAGE 2
NO INJECTOR TEST LIGHT FLASH

(12)
- IGNITION "ON" AND INJECTOR TEST LIGHT STILL IN PLACE.
- MOMENTARILY JUMPER *CAM* SENSOR HARNESS CONNECTOR (GRAY) TERMINALS "B" TO "C".
- REPEATEDLY JUMPER *CRANK* SENSOR HARNESS CONNECTOR (BLACK) TERMINALS "B" TO "C". ★ SEE CAUTION.
- INJECTOR TEST LIGHT SHOULD FLASH EACH TIME *CRANK* SENSOR HARNESS TERMINALS ARE JUMPERED. DID IT?

NO

(13)
- CHECK VOLTAGE BETWEEN *CRANK* SENSOR HARN. TERMS. "B" AND "C".
- VOLTAGE SHOULD BE 6-9 VOLTS. IS IT?

NO

(14)
- CHECK VOLTAGE FROM *CRANK* SENSOR HARN. TERM. "C" TO GROUND.
- READING SHOULD BE 6 TO 9 VOLTS. IS IT?

NO

CHECK CKT 643 FOR OPEN OR SHORT TO GROUND (IF VOLTAGE WAS ABOVE 9 VOLTS, CHECK FOR A SHORT TO VOLTAGE AND THE POSSIBILITY OF A DAMAGED SENSOR. IF CIRCUIT IS OK, IT'S C³I MODULE CONNECTION OR MODULE.

YES

CHECK FOR OPEN IN GROUND CKT 642. IF CIRCUIT IS OK, IT'S C³I MODULE CONNECTION OR MODULE.

YES

IT'S FAULTY C³I MODULE CONNECTION OR MODULE.

YES

- CHECK VOLTAGE AT *CRANK* SENSOR HARN. TERM. "A".
- READING SHOULD BE OVER 10 VOLTS. IS IT?

NO

CHECK POWER FEED CKT 641 FOR OPEN OR SHORT TO GROUND. IF CIRCUIT. IS OK, IT'S C³I MODULE CONNECTION OR MODULE.

YES

IT'S *CRANK* SENSOR CONNECTION OR SENSOR.*

★CAUTION: When jumping sensor terminals, be sure to keep fingers clear of pulleys and belts as a slight movement of belt may occur, resulting in possible injury.

* INSPECT CRANK SENSOR FOR PROPER GAP (APPROX. .025"), OR SIGNS OF RUBBING. IF RUBBING IS EVIDENT, DETERMINE CAUSE AND REPLACE SENSOR.

CLEAR CODES AND CONFIRM "CLOSED LOOP" OPERATION AND NO "SERVICE ENGINE SOON" LIGHT.

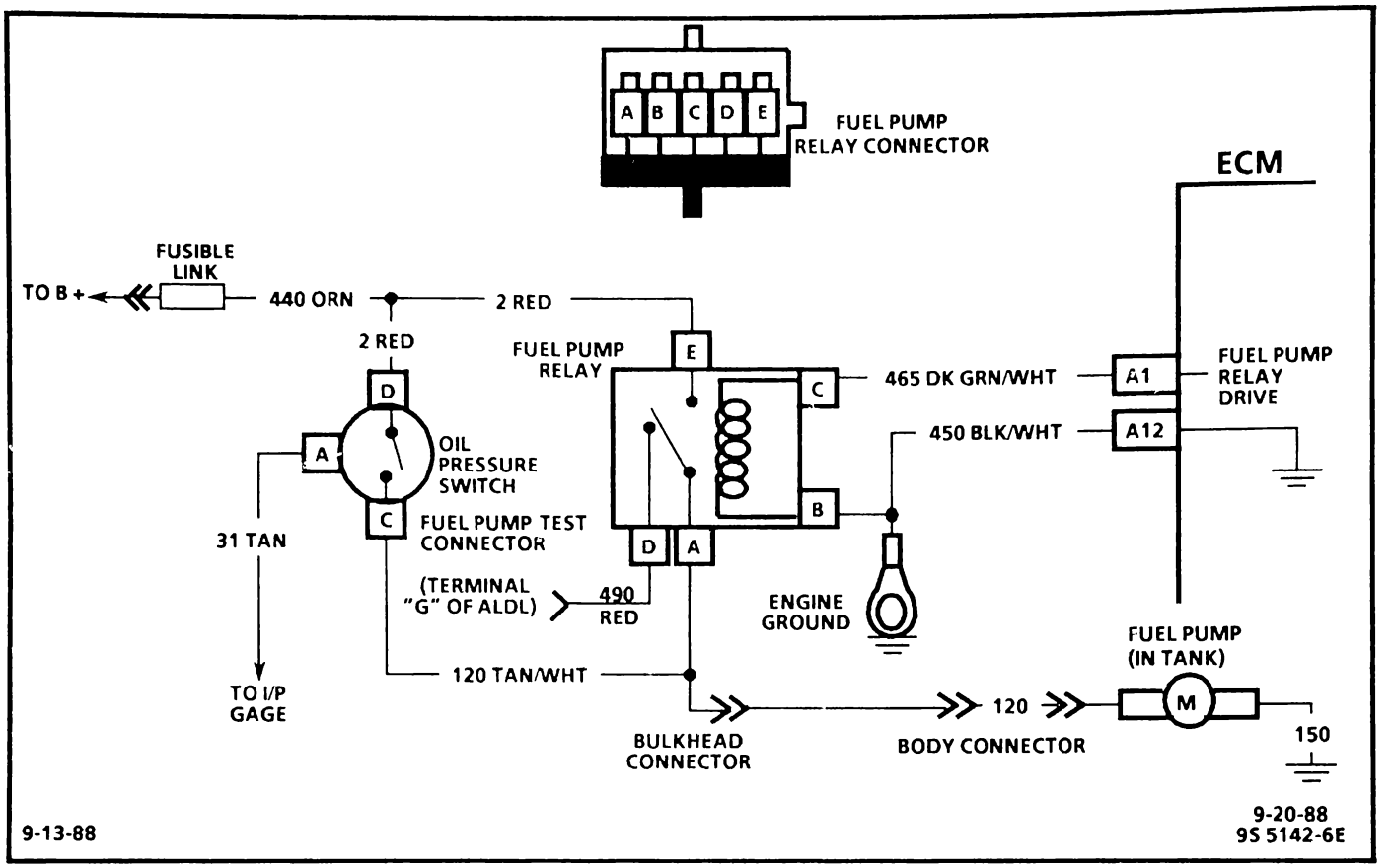

CHART A-5

FUEL PUMP RELAY CIRCUIT
3.8L TURBO "F" CARLINE (PORT)

Circuit Description:

When the ignition switch is turned "ON", the Electronic Control Module (ECM) will energize the fuel pump relay with a 12 volt signal and run the in-tank fuel pump. The fuel pump will operate as long as the engine is cranking or running and the ECM is receiving ignition reference pulses. If there are no ignition reference pulses, the ECM will no longer supply the fuel pump relay signal within 2 seconds after the ignition is turned "ON".

Should the fuel pump relay or the 12 volt relay drive from the ECM fail, the fuel pump will receive electrical current through the oil pressure switch back-up circuit.

When the engine is stopped, the fuel pump can be turned "ON" by applying battery voltage to the test terminal located on terminal "G" of the ALDL connector.

Test Description:

Numbers below refer to circled numbers on the diagnostic chart.

1. This check is to determine if the oil pressure switch is faulty also. Since it is a back-up component, it must be checked without the fuel pump relay connected.
2. This check will determine if the oil pressure switch is shorted internally.
3. A fusible link that is blown indicates there is a short in the circuit that feeds power to the fuel pump. If the fusible link is OK, check for an open between the fusible link and the fuel pump relay.

Diagnostic Aids:

An inoperative fuel pump relay can result in long cranking times. The extended crank period is caused by the time necessary for oil pressure to reach the pressure required to close the oil pressure switch and turn "ON" the fuel pump.

CHART A-5
FUEL PUMP RELAY CIRCUIT
3.8L TURBO "F" CARLINE (PORT)

- PROBE FUEL PUMP TEST TERMINAL WITH A TEST LIGHT TO 12V.
- IGNITION "OFF" FOR 10 SECONDS.
- IGNITION "ON".
- TEST LIGHT SHOULD NOT LIGHT FOR 2 SECONDS AFTER IGNITION IS TURNED "ON".

DOES IT?

NO

- DISCONNECT FUEL PUMP RELAY.
- IGNITION "ON", ENGINE STOPPED.
- PROBE RELAY HARNESS CONNECTOR TERMINAL "E" WITH A TEST LIGHT TO GROUND.

LIGHT "ON"

- CONNECT A TEST LIGHT BETWEEN HARNESS CONNECTOR TERMINALS "E" AND "B".

LIGHT "ON"

- CONNECT TEST LIGHT BETWEEN TERMINAL "C" AND GROUND.
- IGNITION "OFF" FOR 10 SECONDS.
- NOTE TEST LIGHT DURING 2 SECONDS AFTER IGNITION "ON".

LIGHT "ON"

(1)
- REPLACE FUEL PUMP RELAY.
- IF ORIGINAL SYMPTOM WAS "ENGINE CRANKS BUT WILL NOT RUN", CONTINUE TESTING OF OIL PRESSURE SWITCH AS FOLLOWS:
- ENGINE AT NORMAL OPERATING TEMPERATURE WITH NORMAL OIL PRESSURE.
- DISCONNECT FUEL PUMP RELAY. ENGINE SHOULD CONTINUE TO RUN.

DOES IT?

YES

(2)
- RECONNECT FUEL PUMP RELAY.
- IGNITION "OFF".
- PROBE FUEL PUMP TEST TERMINAL WITH A TEST LIGHT TO GROUND.

LIGHT "OFF"

NO TROUBLE FOUND.

LIGHT "ON"

REPLACE OIL PRESSURE SWITCH.

NO

REPLACE OIL PRESSURE SWITCH.

LIGHT "OFF"

CHECK FOR OPEN OR SHORT TO GROUND IN CKT 465. IF OK, REPLACE ECM.

YES

NO TROUBLE FOUND.

LIGHT "OFF"

(3)
- INSPECT FUSIBLE LINK

FUSIBLE LINK BLOWN

REPAIR SHORT TO GROUND IN CKT 440 OR CKT 120.

FUSIBLE LINK NOT BLOWN

REPAIR OPEN CKT 440 OR CKT 2

LIGHT "OFF"

REPAIR OPEN GROUND CKT 450.

9-13-88
8E 4387-6E

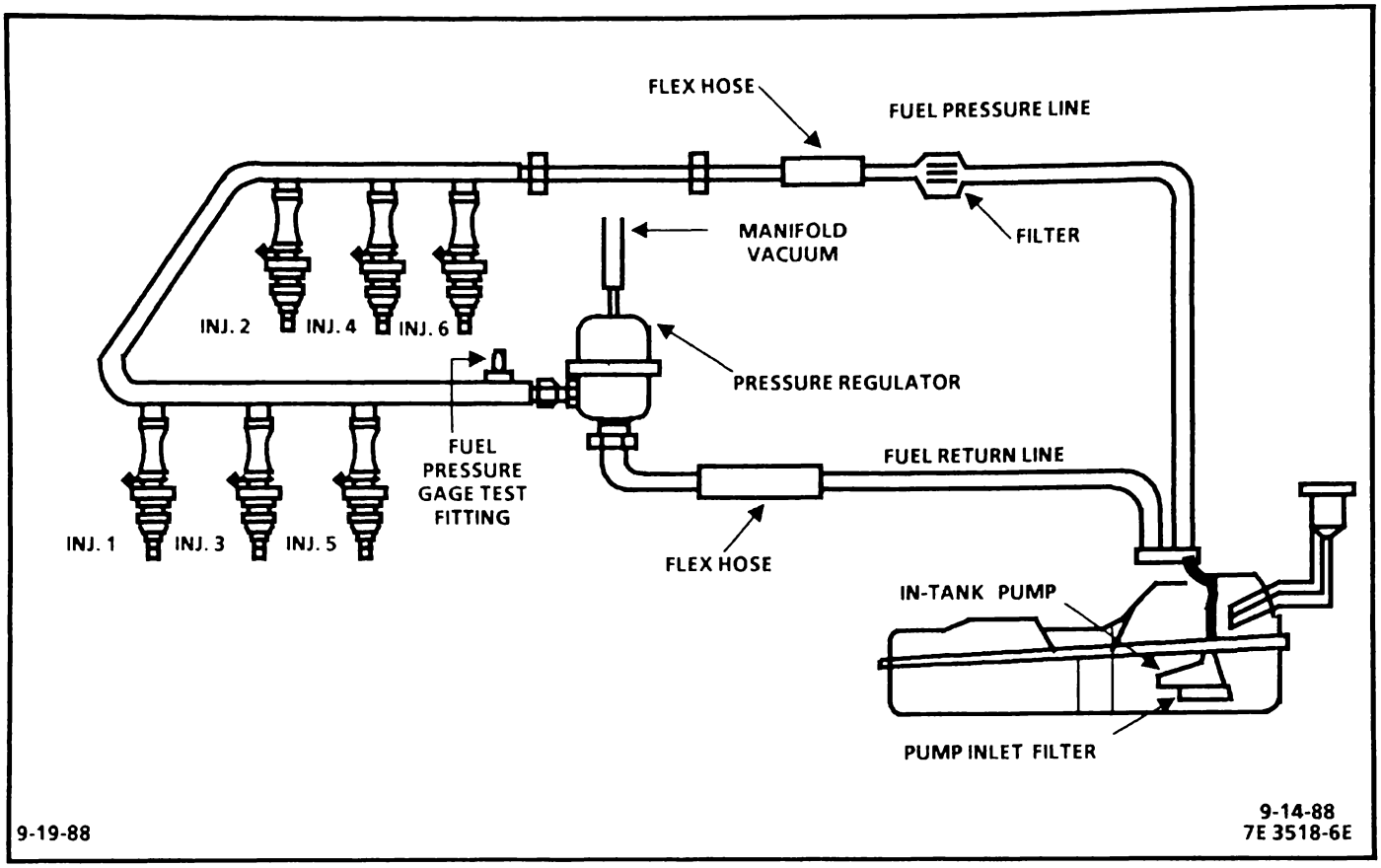

CHART A-7

(Page 1 of 2)
FUEL SYSTEM PRESSURE TEST
3.8L TURBO "F" CARLINE (PORT)

Circuit Description:

The fuel pump will deliver fuel to the fuel rail and injectors, then to the pressure regulator where the system pressure is controlled. Excess fuel pressure is bypassed back to the fuel tank. When the engine is stopped, the fuel pump can be turned "ON" by applying battery voltage to the test terminal located on terminal "G" of the ALDL connector.

Improper fuel system pressure may contribute to one or all of the following symptoms:

- Cranks but will not run.
- Code 44 or 45.
- Cuts out, may feel like ignition problem.
- Hesitation, loss of power, or poor fuel economy.

Test Description: Numbers below refer to circled numbers on the diagnostic chart.

1. **CAUTION:** **To reduce the risk of fire and personal injury, it is necessary to relieve the fuel system pressure before servicing fuel system components. To do this:**

- Disconnect the fuel tank harness connector.
- Crank engine - engine will start and run until fuel supply remaining in fuel pipes is consumed.
- Engage starter for 3.0 seconds to assure relief of any remaining pressure.
- Install pressure gage J-34730-1 to fuel pressure tap.
- Connect the fuel tank harness connector.
- Start engine. With ignition "ON", pump pressure is controlled by spring pressure and throttle body vacuum within the pressure regulator assembly.
- Ignition "OFF" for 10 seconds. Pressure should not leak down after the fuel pump is shut "OFF".

2. When the engine is idling, the manifold pressure is low (high vacuum) and is applied to the fuel regulator diaphragm. This will offset the spring and result in a lower fuel pressure.
3. The application of 40-46 kPa (12-14" HG) of vacuum to the pressure regulator should result in a fuel pressure less than step 1..
4. Pressure that leaks down may be caused by one of the following:
   - In-tank fuel pump check valve not holding.
   - Pump coupling hose leaking.
   - Fuel pressure regulator valve leaking.
   - Injector sticking open.

CHART A-7

(Page 1 of 2)

FUEL SYSTEM PRESSURE TEST 3.8L TURBO "F" CARLINE (PORT)

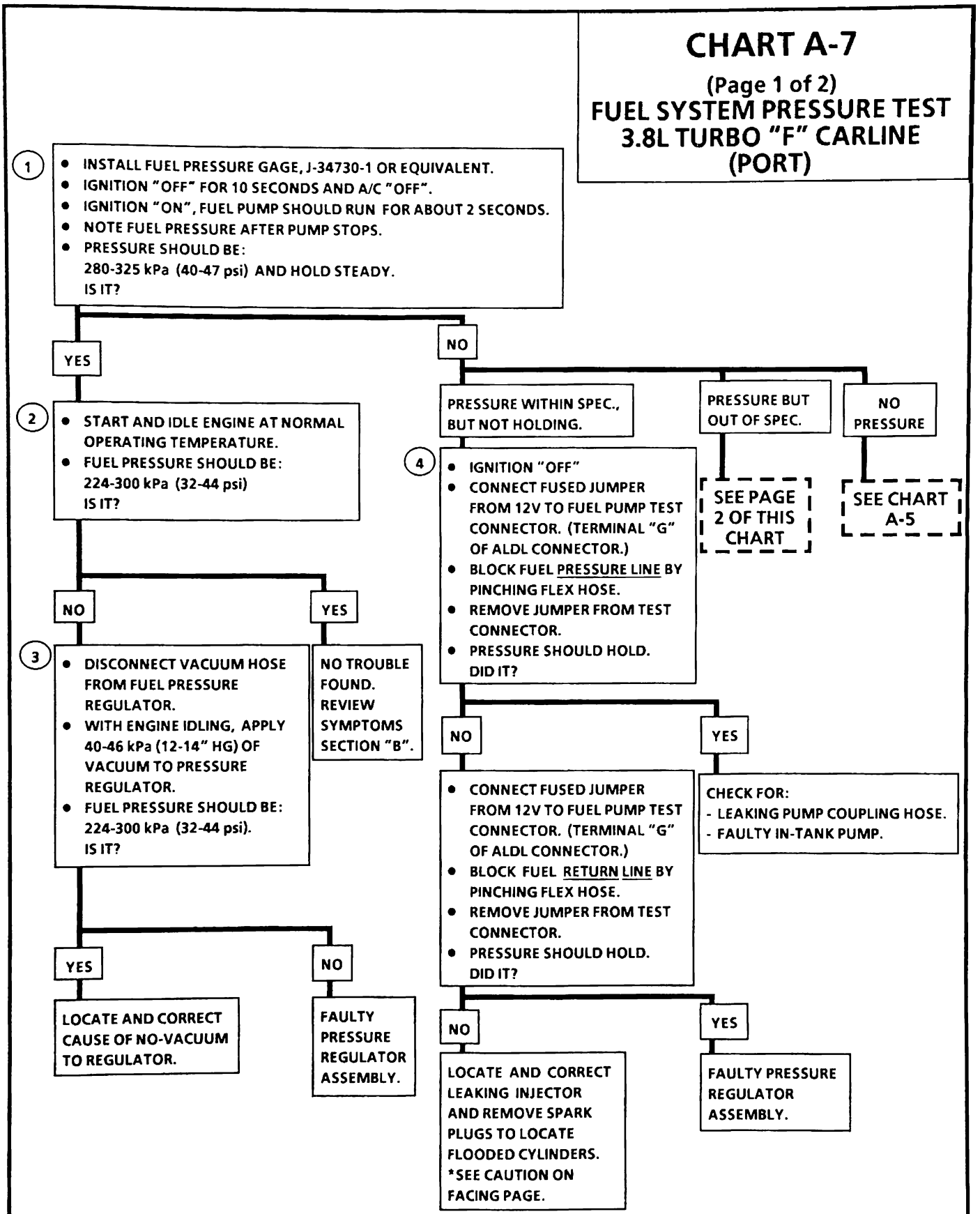

CLEAR CODES AND CONFIRM "CLOSED LOOP" OPERATION AND NO "SERVICE ENGINE SOON" LIGHT.

10-18-88
7E 3522-6E

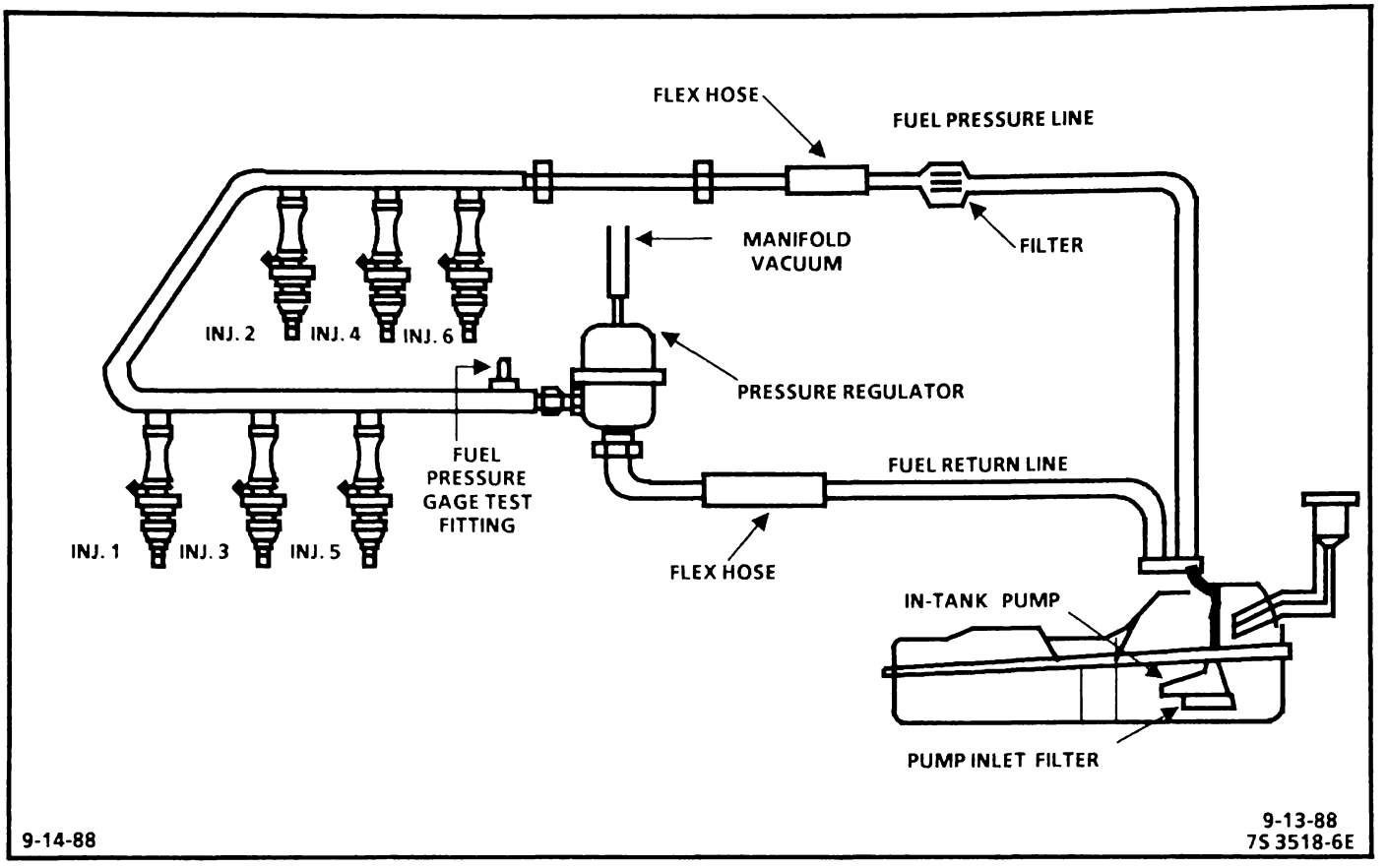

CHART A-7

(Page 2 of 2)
FUEL SYSTEM PRESSURE TEST
3.8L TURBO "F" CARLINE (PORT)

Circuit Description:

The fuel pump will deliver fuel to the fuel rail and injectors, then to the pressure regulator, where the system pressure is controlled. Excess fuel pressure is bypassed back to the fuel tank. When the engine is stopped, the pump can be turned "ON" by applying battery voltage to the test terminal located on terminal "G" of the ALDL connector.

Improper fuel system pressure may contribute to one or all of the following symptoms:

- Cranks but will not run.
- Code 44 or 45.
- Cuts out, may feel like ignition problem.
- Hesitation, Loss of power, or Poor fuel economy.

Test Description: Numbers below refer to circled numbers on the diagnostic chart.

5. Pressure but less than specifications falls into two areas:
   - Regulated pressure but less than specifications; The amount of fuel to injectors is OK but pressure is too low. The system will be lean and may set Code 44. Also, possible hard starting cold and overall poor performance.
   - Restricted flow causing pressure drop; Normally, a vehicle with a fuel pressure of less than 165 kPa (24 psi) at idle will not be driveable. However, if the pressure drop occurs only while driving, the engine will normally surge then stop as pressure begins to drop rapidly.
6. Restricting the fuel return line allows the fuel pump to build above regulated pressure. With battery voltage applied to the pump test terminal, pressure should rise to 414 kPa (60 psi) as the fuel return hose is gradually pinched.

NOTICE: Do not allow fuel pressure to exceed 414 kPa (60 psi), damage to the pressure regulator may result.

7. This test determines if the high fuel pressure is due to a restricted fuel return line or a pressure regulator problem.

CHART A-7

(Page 2 of 2)

FUEL SYSTEM PRESSURE TEST 3.8L TURBO "F" CARLINE (PORT)

CAUTION:
- TO REDUCE THE RISK OF FIRE AND PERSONAL INJURY, IT IS NECESSARY TO RELIEVE THE FUEL SYSTEM PRESSURE BEFORE SERVICING FUEL SYSTEM COMPONENTS.
- AFTER RELIEVING SYSTEM PRESSURE, A SMALL AMOUNT OF FUEL MAY BE RELEASED WHEN SERVICING FUEL LINES OR CONNECTIONS. IN ORDER TO REDUCE THE CHANCE OF PERSONAL INJURY, COVER FUEL LINE FITTINGS WITH A SHOP TOWEL BEFORE DISCONNECTING, TO CATCH ANY FUEL THAT MAY LEAK OUT. PLACE THE TOWEL IN AN APPROVED CONTAINER WHEN DISCONNECT IS COMPLETED.

TOOL REQUIRED:
J 34730-1 FUEL PRESSURE GAGE

1. DISCONNECT NEGATIVE BATTERY TERMINAL TO AVOID POSSIBLE FUEL DISCHARGE IF AN ACCIDENTAL ATTEMPT IS MADE TO START THE ENGINE.
2. LOOSEN FUEL FILLER CAP TO RELIEVE TANK VAPOR PRESSURE.
3. CONNECT GAGE J 34730-1 TO FUEL PRESSURE CONNECTION. WRAP A SHOP TOWEL AROUND FITTING WHILE CONNECTING GAGE TO AVOID SPILLAGE.
4. INSTALL BLEED HOSE INTO AN APPROVED CONTAINER AND OPEN VALVE TO BLEED SYSTEM PRESSURE. FUEL CONNECTIONS ARE NOW SAFE FOR SERVICING.
5. DRAIN ANY FUEL REMAINING IN GAGE INTO AN APPROVED CONTAINER.

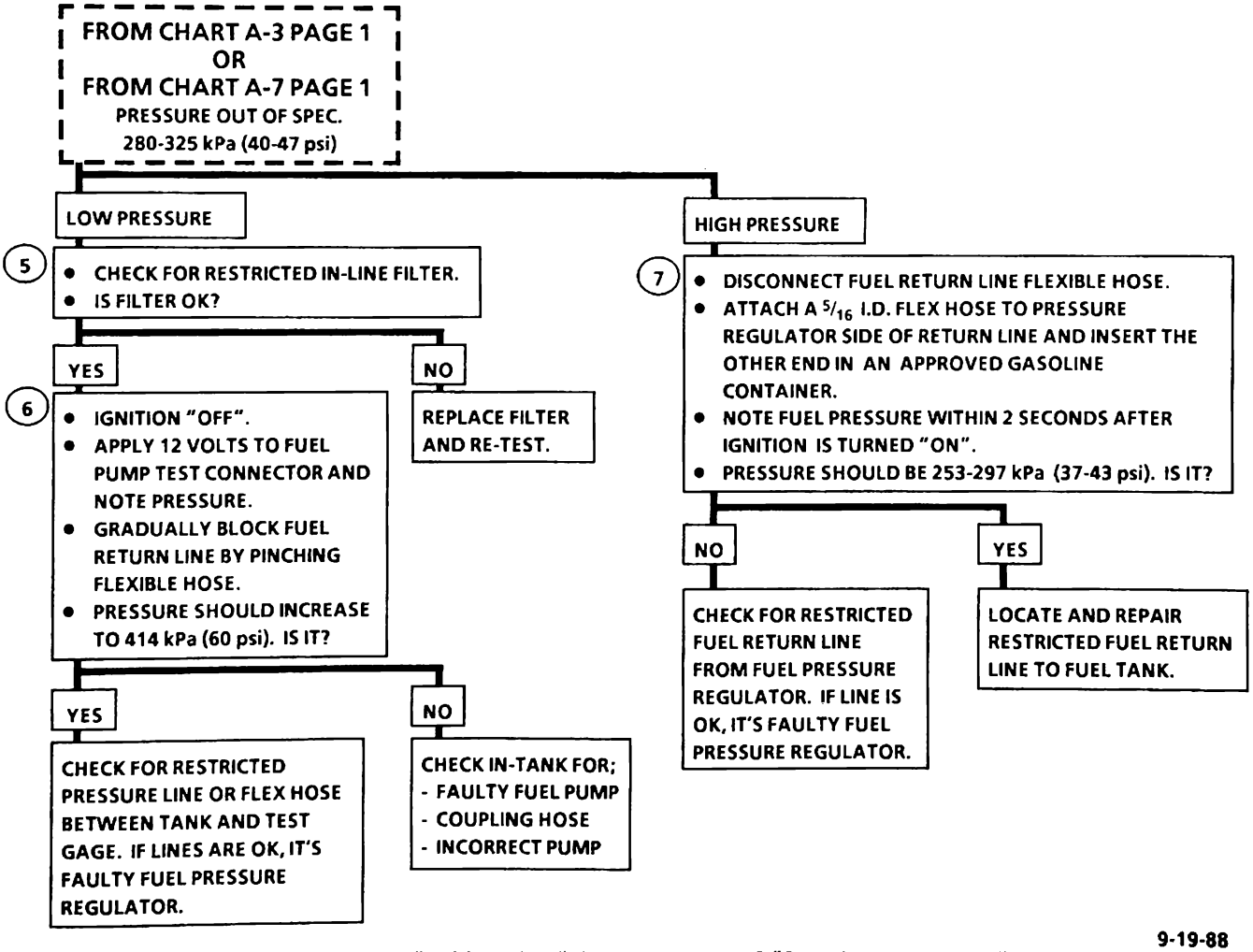

CLEAR CODES AND CONFIRM "CLOSED LOOP" OPERATION AND NO "SERVICE ENGINE SOON" LIGHT.

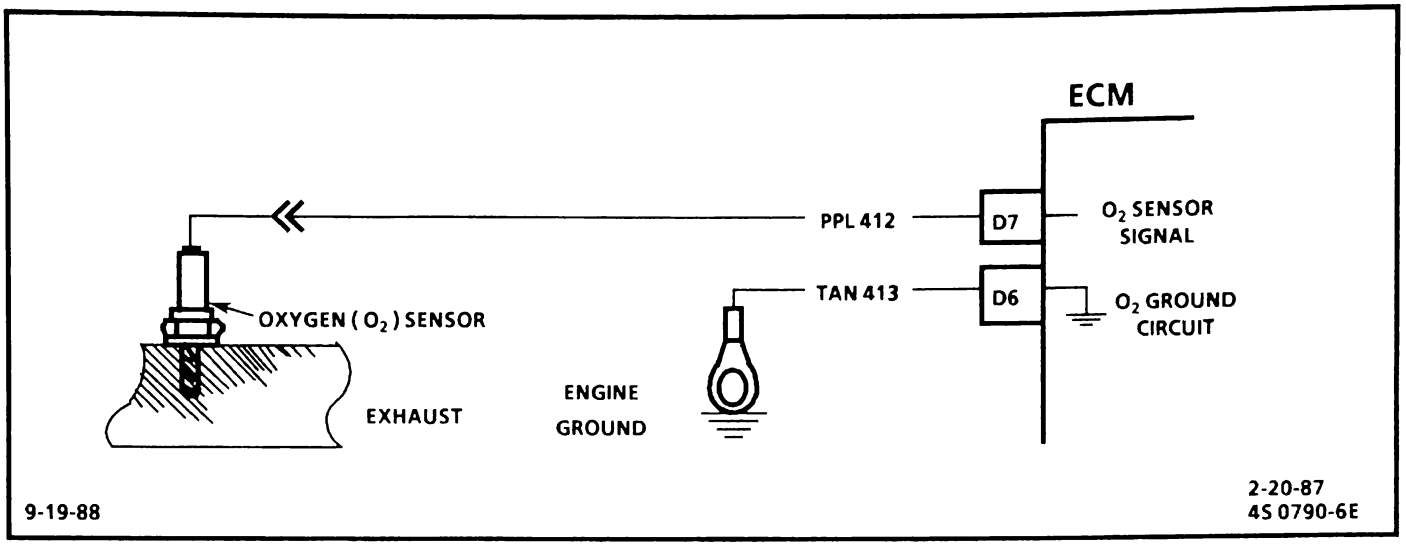

CODE 13

OXYGEN SENSOR CIRCUIT
(OPEN CIRCUIT)
3.8L TURBO "F" CARLINE (PORT)

Circuit Description:

The ECM supplies a voltage of about .45 volt between terminals "D6" and "D7". (If measured with a 10 megohm digital voltmeter, this may read as low as .32 volt.) The O_2 sensor varies the voltage within a range of about 1 volt if the exhaust is rich, down through about .10 volt if exhaust is lean.

The sensor is like an open circuit and produces no voltage when it is below 360°C (600°F). An open sensor circuit or cold sensor causes "Open Loop" operation.

Test Description:

Numbers below refer to circled numbers on the diagnostic chart.

1. Code 13 will set:
   - Engine at normal operating temperature (above 80°C/176°F).
   - At least 2 minutes engine run time after start.
   - O_2 signal voltage steady between .35 and .55 volt.
   - Throttle position sensor signal above idle
   - All conditions must be met for about 60 seconds.

     If the conditions for a Code 13 exist the system will not go "Closed Loop".
2. This will determine if the oxygen sensor or the wiring or ECM is the cause of the Code 13.
3. For this test use only a high impedence digital volt ohm meter. This test checks the continuity of CKT 412 and CKT 413. If CKT 413 is open, the ECM voltage on CKT 412 will be over .6 volt (600 mV).

Diagnostic Aids:

An intermittent may be caused by a poor connection, rubbed through wire insulation or a wire broken inside the insulation.

Check For:

- Poor Connection or Damaged Harness Inspect ECM harness connectors for backed out terminals "D7" or "D6", improper mating, broken locks, improperly formed or damaged terminals, poor terminal to wire connection and damaged harness.
- Intermittent Test If connections and harness checks out OK, "Scan" O_2 sensor voltage while moving related connectors and wiring harness, with warm engine running at part throttle in "Closed Loop". If the failure is induced, the "O_2 sensor voltage" reading will change from its normal fluctuating voltage (above 600 mV and below 300 mV) to a fixed value around 450 mV. This may help to isolate the location of the malfunction.

CODE 13

OXYGEN SENSOR CIRCUIT (OPEN CIRCUIT) 3.8L TURBO "F" CARLINE (PORT)

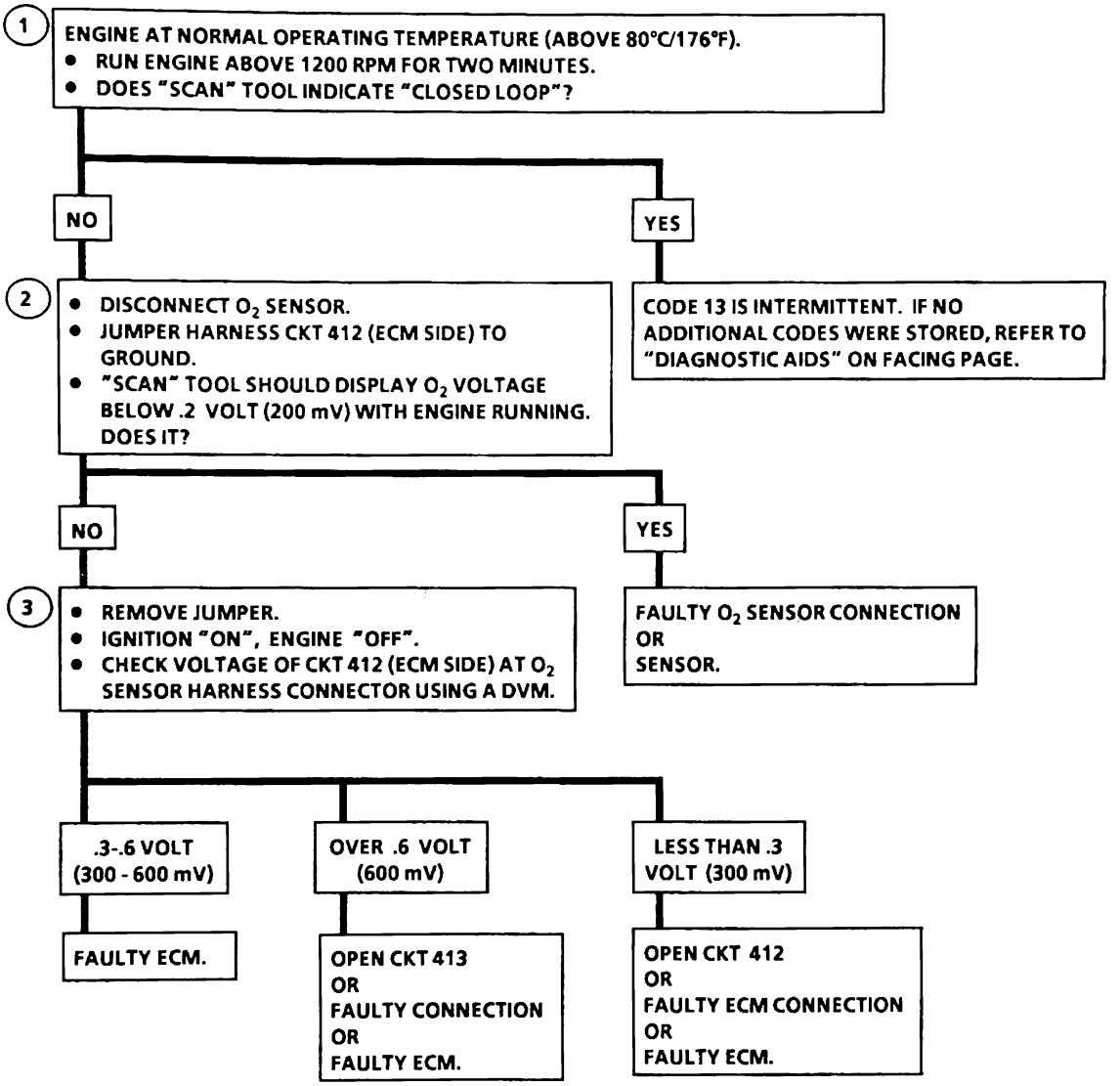

CLEAR CODES AND CONFIRM "CLOSED LOOP" OPERATION AND NO "SERVICE ENGINE SOON" LIGHT.

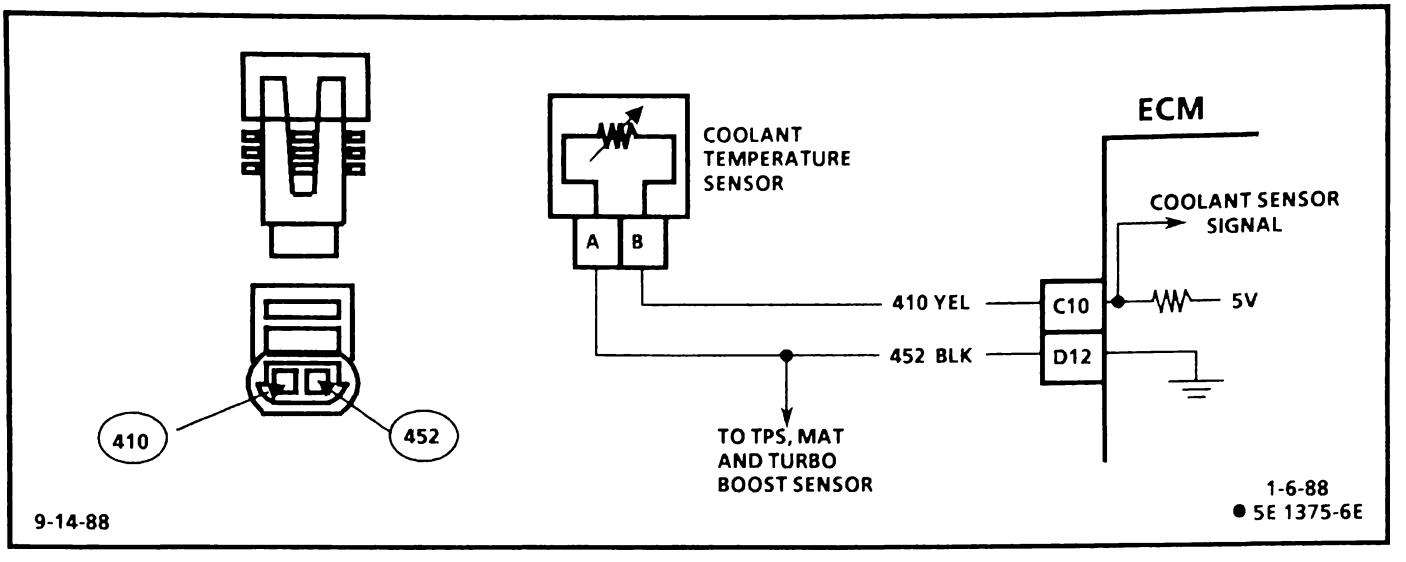

CODE 14

COOLANT TEMPERATURE SENSOR CIRCUIT
(HIGH TEMPERATURE INDICATED)
3.8L TURBO "F" CARLINE (PORT)

Circuit Description:

The Coolant Temperature Sensor (CTS) uses a thermistor to control the signal voltage to the ECM. The ECM applies a voltage on CKT 410 to the sensor. When the engine coolant is cold the sensor (thermistor) resistance is high, therefore the ECM will see high signal voltage.

As the engine coolant warms, the sensor resistance becomes less, and the voltage drops. At normal engine operating temperature (85°C - 95°C or 185°F - 203°F) the voltage will measure about 1.5 to 2.0 volts.

Test Description: Numbers below refer to circled numbers on the diagnostic chart.

1. Code 14 will set if:
   - Signal voltage indicates a coolant temperature above 135°C (275°F) for a calibrated time.
2. This test will determine if CKT 410 is shorted to ground which will cause the conditions for Code 14.

Diagnostic Aids:

After engine is started, the temperature should rise steadily to about 90°C (194°F) then stabilize when thermostat opens.

An intermittent may be caused by a poor connection, rubbed through wire insulation or a wire broken inside the insulation.

Check For:

- Poor Connection or Damaged Harness Inspect ECM harness connectors for backed out terminals "C10" or "D12", improper mating, broken locks, improperly formed or damaged terminals, poor terminal to wire connection and damaged harness.
- Intermittent Test. If connections and harness checks out OK, "Scan" coolant temperature while moving related connectors and wiring harness. If the failure is induced, the "coolant temperature" display will change. This may help to isolate the location of the malfunction.
- Shifted Sensor. The "Temperature To Resistance Value" scale may be used to test the coolant sensor at various temperature levels to evaluate the possibility of a "shifted" (mis-scaled) sensor which may result in driveability complaints.

CODE 14

COOLANT TEMPERATURE SENSOR CIRCUIT
(HIGH TEMPERATURE INDICATED)
3.8L TURBO "F" CARLINE (PORT)

1. DOES "SCAN" TOOL DISPLAY COOLANT TEMPERATURE OF 130°C (266°F) OR HIGHER?

- YES → 2
- NO → CODE 14 IS INTERMITTENT. IF NO ADDITIONAL CODES WERE STORED, REFER TO "DIAGNOSTIC AIDS" ON FACING PAGE.

2. • DISCONNECT SENSOR. "SCAN" TOOL SHOULD DISPLAY TEMPERATURE BELOW -30°C (-22°F). DOES IT?

- YES → REPLACE SENSOR.
- NO → CKT 410 SHORTED TO GROUND,
  OR
  CKT 410 SHORTED TO SENSOR GROUND CIRCUIT
  OR
  FAULTY ECM.

DIAGNOSTIC AID

COOLANT SENSOR		
TEMPERATURE VS. RESISTANCE VALUES (APPROXIMATE)		
°F	°C	OHMS
210	100	185
160	70	450
100	38	1,800
70	20	3,400
40	4	7,500
20	-7	13,500
0	-18	25,000
-40	-40	100,700

CLEAR CODES AND CONFIRM "CLOSED LOOP" OPERATION AND NO "SERVICE ENGINE SOON" LIGHT.

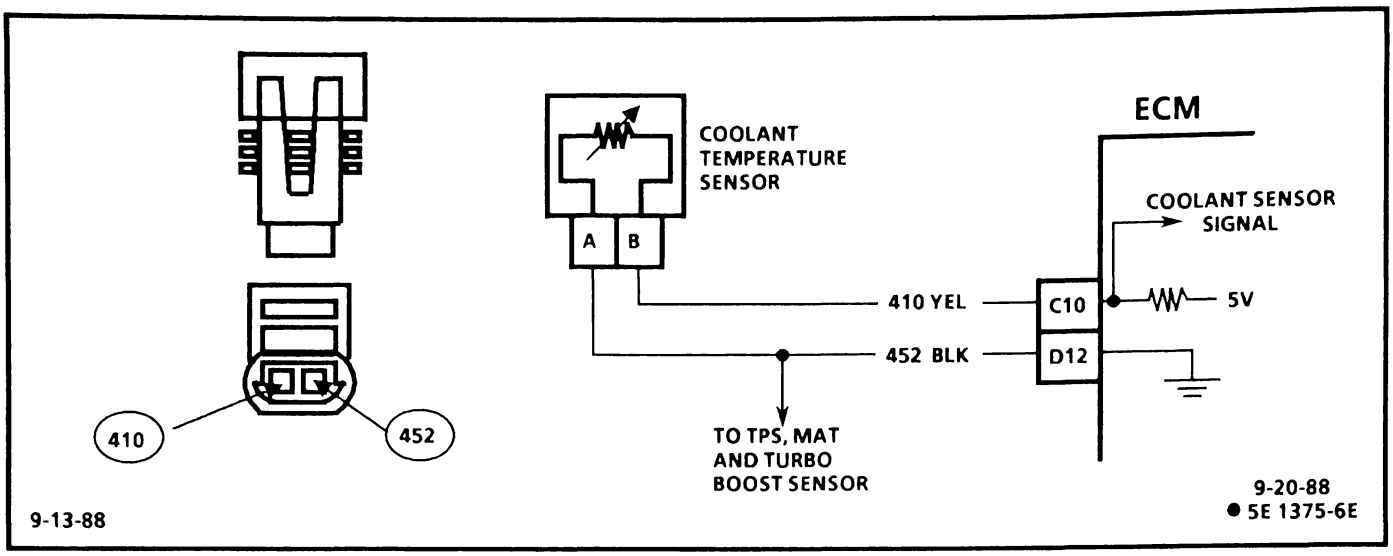

CODE 15

COOLANT TEMPERATURE SENSOR CIRCUIT
(LOW TEMPERATURE INDICATED)
3.8L TURBO "F" CARLINE (PORT)

Circuit Description:

The Coolant Temperature Sensor (CTS) uses a thermistor to control the signal voltage to the ECM. The ECM applies a voltage on CKT 410 to the sensor. When the engine coolant is cold the sensor (thermistor) resistance is high, therefore the ECM will see high signal voltage.

As the engine coolant warms, the sensor resistance becomes less, and the voltage drops. At normal engine operating temperature (85°C - 95°C or 185°F - 203°F) the voltage will measure about 1.5 to 2.0 volts at the ECM.

Test Description: Numbers below refer to circled numbers on the diagnostic chart.

1. Code 15 will set if:
   - Signal voltage indicates an engine coolant temperature less than -44°C (-47°F) for at least 3 seconds.
2. This test simulates a Code 14. If the ECM recognizes the low signal voltage, (high temperature) and the "Scan" tool reads 130°C (266°F) or more, the ECM and wiring are OK.
3. This test will determine if CKT. 410 is open. There should be 5 volts present at sensor connector if measured with a DVM.

Diagnostic Aids:

After engine is started the temperature should rise steadily to about 90°C (194°F) then stabilize when the thermostat opens.

An intermittent may be caused by a poor connection, rubbed through wire insulation or a wire broken inside the insulation.

Check For:

- Poor Connection or Damaged Harness Inspect ECM harness connectors for backed out terminals "C10" or "D12", improper mating, broken locks, improperly formed or damaged terminals, poor terminal to wire connection and damaged harness.
- Intermittent Test If connections and harness checks out OK, "Scan" coolant temperature while moving related connectors and wiring harness. If the failure is induced, the "coolant temperature" display will change. This may help to isolate the location of the malfunction.
- Shifted Sensor The "Temperature To Resistance Value" scale may be used to test the coolant sensor at various temperature levels to evaluate the possibility of a "shifted" (mis-scaled) sensor which may result in driveability complaints.

A faulty connection, or an open in CKT 410 or CKT 452 will result in a Code 15.

If Code 21 or 23 is also set, check CKT 452 for faulty wiring or connections. Check terminals at sensor for good contact.

Refer to "Intermittents" in Section "B".

CODE 15

COOLANT TEMPERATURE SENSOR CIRCUIT
(LOW TEMPERATURE INDICATED)
3.8L TURBO "F" CARLINE (PORT)

1. • DOES "SCAN" TOOL DISPLAY COOLANT TEMPERATURE OF -30°C (-22°F) OR LESS?

- YES → 2
- NO → CODE 15 IS INTERMITTENT. IF NO ADDITIONAL CODES WERE STORED, REFER TO "DIAGNOSTIC AIDS" ON FACING PAGE.

2. • DISCONNECT SENSOR.
• JUMPER HARNESS TERMINALS TOGETHER.
• "SCAN" TOOL SHOULD DISPLAY 130°C (266°F) OR MORE. DOES IT?

- NO → 3
- YES → FAULTY CONNECTION OR SENSOR.

3. • JUMPER CKT 410 TO GROUND.
• "SCAN" TOOL SHOULD DISPLAY OVER 130°C (266°F). DOES IT?

- YES → OPEN SENSOR GROUND CIRCUIT, FAULTY CONNECTION OR FAULTY ECM.
- NO → OPEN CKT 410, FAULTY CONNECTION AT ECM, OR FAULTY ECM.

DIAGNOSTIC AID

COOLANT SENSOR		
TEMPERATURE TO RESISTANCE VALUES (APPROXIMATE)		
°F	°C	OHMS
210	100	185
160	70	450
100	38	1,800
70	20	3,400
40	4	7,500
20	-7	13,500
0	-18	25,000
-40	-40	100,700

CLEAR CODES AND CONFIRM "CLOSED LOOP" OPERATION AND NO "SERVICE ENGINE SOON" LIGHT.

10-4-88
• 7S 3261-6E

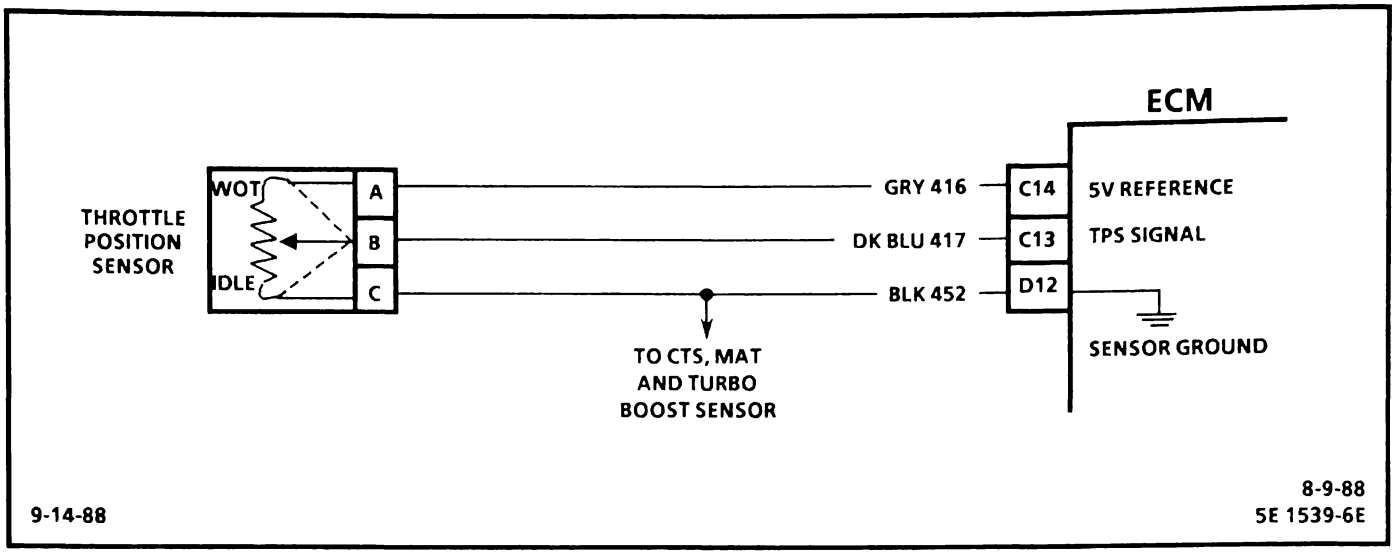

CODE 21

THROTTLE POSITION SENSOR (TPS) CIRCUIT (SIGNAL VOLTAGE HIGH) 3.8L TURBO "F" CARLINE (PORT)

Circuit Description:

The Throttle Position Sensor (TPS) provides a voltage signal that changes relative to throttle blade angle. Signal voltage will vary from about .4 at idle to about 5 volts at wide open throttle (WOT).

The TPS signal is one of the most important inputs used by the ECM for fuel control and for most of the ECM controlled outputs.

Test Description:

Numbers below refer to circled numbers on the diagnostic chart.

1. Code 21 will set if:
   - Engine is running
   - TPS signal voltage is greater than 2.5 volts.
   - Code 33 or 34 not present at first start up.
   - All conditions met for 5 seconds.

   With closed throttle, ignition "ON" or at idle, voltage should be .40 volt ± .05 volt. If not check adjustment. See Section "6E3-C1" for adjustment procedure.
2. With the TPS sensor disconnected, the TPS voltage should go low if the ECM and wiring are OK.
3. Probing CKT 452 with a test light to 12 volts checks the sensor ground CKT 452. A faulty sensor ground circuit will cause a Code 21.

Diagnostic Aids:

A "Scan" tool reads throttle position in volts. With ignition "ON" or at idle, voltage should read .40 volt ± .05 volt with throttle closed and increase at a steady rate as throttle is moved toward WOT.

Also some "Scan" tools will read throttle blade angle 0% = closed throttle 100% = WOT.

An open in CKT 452 will result in a Code 21. Refer to "Intermittents" in Section "B".

Check For:

- Poor Connection or Damaged Harness Inspect ECM harness connectors for backed out terminals "C13" or "D12", impropermating, broken locks, improperly formed or damaged terminals, poor terminal to wire connection and damaged harness.
- Intermittent Test If connections and harness checks out OK; monitor TPS voltage display while moving related connectors and wiring harness. If the failure is induced the TPS voltage display will change. This may help to isolate the location of the malfunction.
- TPS Scaling Observe TPS voltage display while depressing accelerator pedal with engine stopped and ignition "ON". Display should vary from closed throttle TPS voltage when throttle was closed, to over 4.5 volts (4500 mv) when throttle is held at wide open throttle position.

CODE 21

THROTTLE POSITION SENSOR (TPS) CIRCUIT
(SIGNAL VOLTAGE HIGH)
3.8L TURBO "F" CARLINE (PORT)

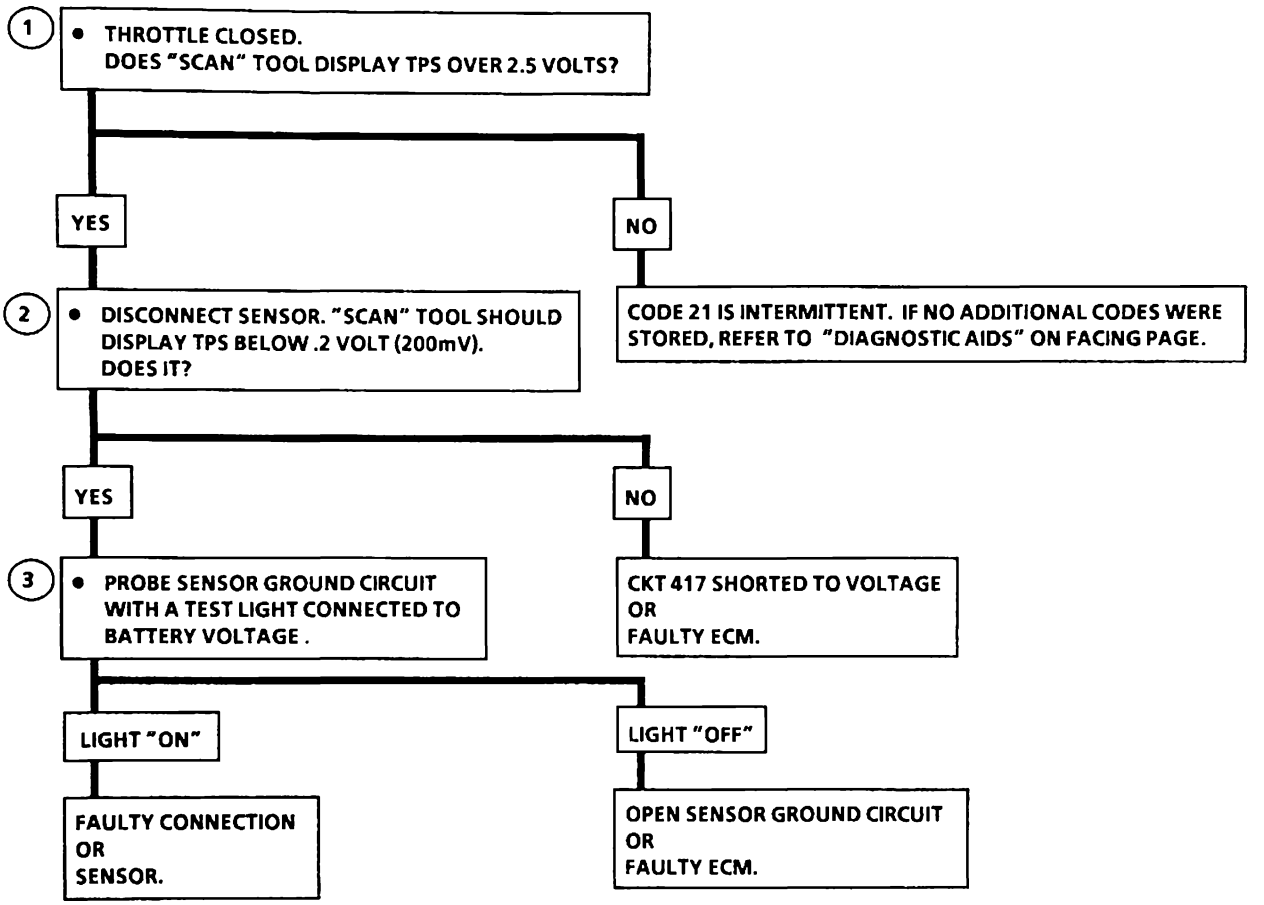

CLEAR CODES AND CONFIRM "CLOSED LOOP" OPERATION AND NO "SERVICE ENGINE SOON" LIGHT.

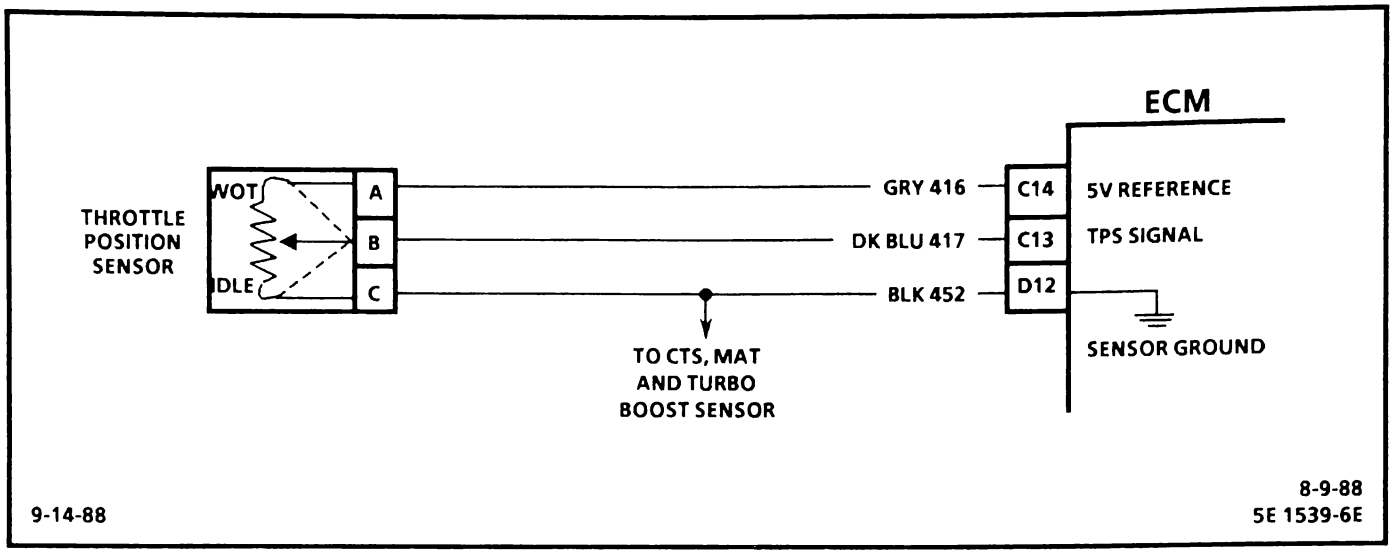

CODE 22

THROTTLE POSITION SENSOR (TPS) CIRCUIT
(SIGNAL VOLTAGE LOW)
3.8L TURBO "F" CARLINE (PORT)

Circuit Description:

The Throttle Position Sensor (TPS) provides a voltage signal that changes relative to throttle blade angle. Signal voltage will vary from about .4 at idle to about 5 volts at wide open throttle (WOT).

The TPS signal is one of the most important inputs used by the ECM for fuel control and for most of the ECM control outputs.

Test Description: Numbers below refer to circled numbers on the diagnostic chart.

1. Code 22 will set if:
   - Engine is running
   - TPS signal voltage is less than .2 volts for 3 seconds.
2. Simulates Code 21: (high voltage) If ECM recognizes the high signal voltage the ECM and wiring are OK.
3. TPS adjustment: .40 volt ± .05 volt, see Section "6E3-C1" for adjustment procedure.
4. Simulates a high signal voltage to check for an open in CKT 417.

Diagnostic Aids:

A "Scan" tool reads throttle position in volts. With ignition "ON" or at idle, TPS signal voltage should read .40volt ± .05 volt with throttle closed and increase at a steady rate as throttle is moved toward WOT.

Also some "Scan" tools will read throttle blade angle 0% = closed throttle 100% = WOT.

An open or short to ground in CKT 416 or CKT 417 will result in a Code 22.

Check For:

- Poor Connection or Damaged Harness Inspect ECM harness connectors for backed out terminals "C13" or "D12", improper mating, broken locks, improperly formed or damaged terminals, poor terminal to wire connection and damaged harness.
- Intermittent Test If connections and harness checks out OK, monitor TPS voltage display while moving related connectors and wiring harness. If the failure is induced the display will change. This may help to isolate the location of the malfunction.
- TPS Scaling Observe TPS voltage display while depressing accelerator pedal with engine stopped and ignition "ON". Display should vary from closed throttle TPS voltage, when throttle was closed, to over 4.5 volts when throttle is held at wide open throttle position.

CODE 22

THROTTLE POSITION SENSOR (TPS) CIRCUIT
(SIGNAL VOLTAGE LOW)
3.8L TURBO "F" CARLINE (PORT)

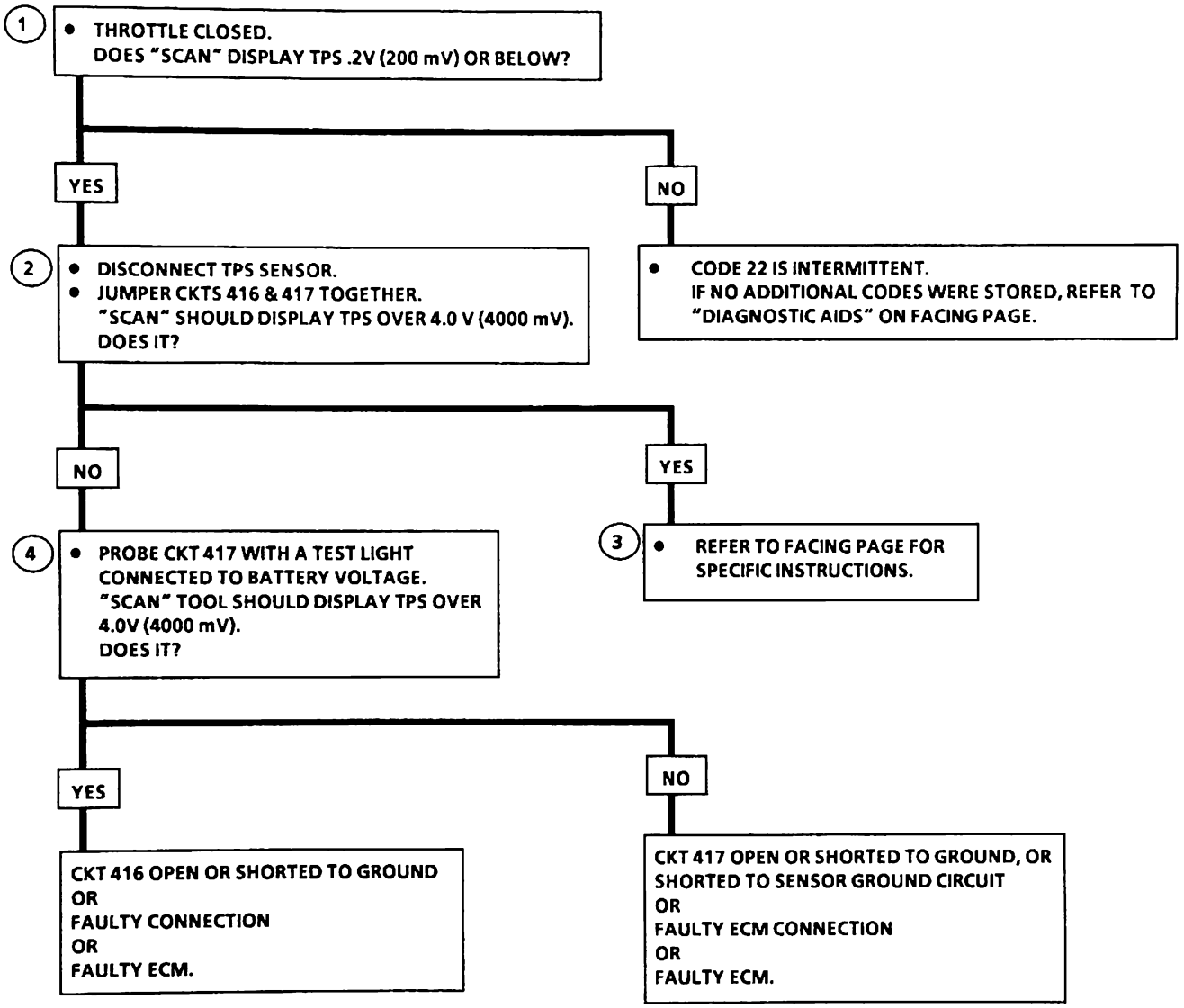

CLEAR CODES AND CONFIRM "CLOSED LOOP" OPERATION AND NO "SERVICE ENGINE SOON" LIGHT.

3-10-88
• 7S 3365-6E

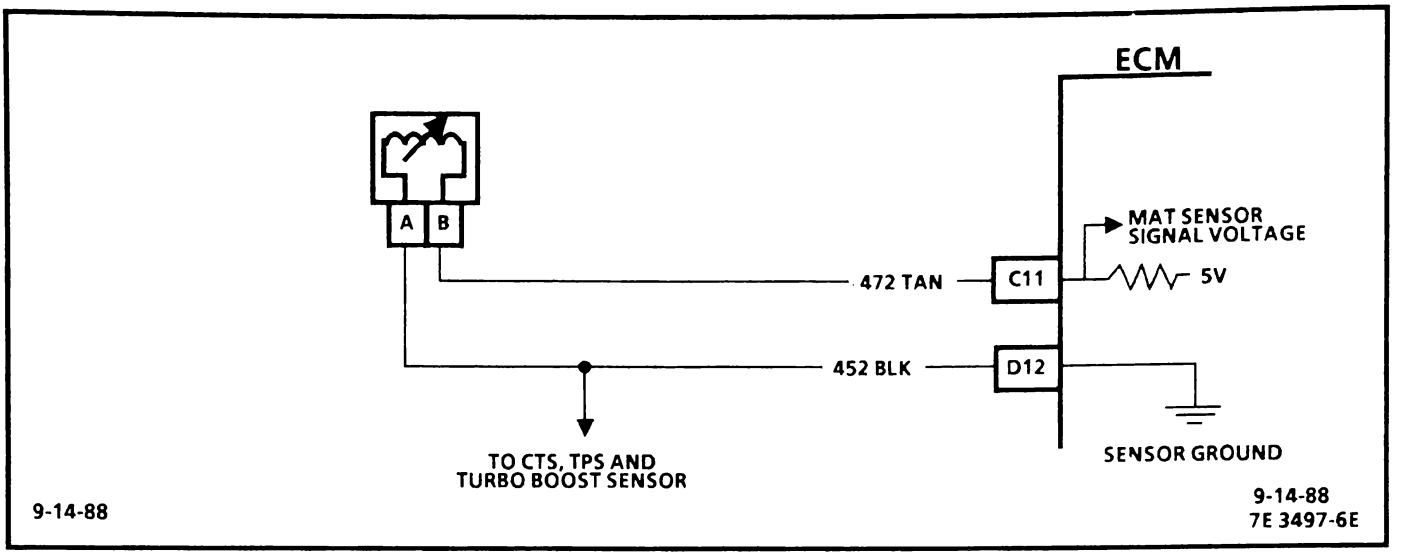

CODE 23

MANIFOLD AIR TEMPERATURE (MAT) SENSOR CIRCUIT
(LOW TEMPERATURE INDICATED)
3.8L TURBO "F" CARLINE (PORT)

Circuit Description:

The Manifold Air Temperature (MAT) sensor uses a thermistor to control the signal voltage to the ECM. The ECM applies a voltage (about 5 volts) on CKT 472 to the sensor. When the manifold air is cold the sensor (thermistor) resistance is high, therefore, the ECM will see a high signal voltage. If the manifold air is warm, the sensor (thermistor) resistance is low, therefore, the ECM will see a low voltage.

Test Description:

Numbers below refer to circled numbers on the diagnostic chart.

Code 23 will set if:

- A signal voltage indicates a manifold air temperature below −40°C (-40°F) for 4 seconds.

Due to the conditions necessary to set a Code 23, the "Service Engine Soon" light will only stay on while the fault is present.

1. A "Scan" tool may not be used to diagnose this fault, due to the ECM transmitting "default" (substitute) values, when the fault is present. A Code 23 will set, due to an open sensor, wire, or connection. This test determine if the wiring and ECM are OK.
2. If the resistance is greater than 25,000 ohms replace the sensor.

Diagnostic Aids:

A "Scan" tool reads temperature of the air entering the engine, and should read close to ambient air temperature when engine is cold. Manifold air temperature readings should increase as underhood temperature increases.

Carefully check harness and connections for possible open CKT 472 or CKT 452.

Refer to "Intermittents" in Section "B".

If the engine has been allowed to sit overnight, the manifold air temperature and coolant temperature values should read within a few degrees of each other.

CODE 23

MANIFOLD AIR TEMPERATURE (MAT) SENSOR CIRCUIT
(LOW TEMPERATURE INDICATED)
3.8L TURBO "F" CARLINE (PORT)

NOTE: A "SCAN" TOOL MAY NOT BE USED TO DIAGNOSE THIS FAULT, DUE TO THE ECM TRANSMITTING "DEFAULT" (SUBSTITUTE) VALUES WHEN THE FAULT IS PRESENT.

1
- DISCONNECT MAT SENSOR.
- IGNITION "ON', ENGINE STOPPED.
- CHECK VOLTAGE BETWEEN HARNESS CONNECTOR TERMINALS, CKT 472 AND 452.

4 VOLTS OR OVER

2
- CHECK RESISTANCE ACROSS MAT SENSOR TERMINALS. SHOULD BE LESS THAN 25,000 OHMS, SEE TABLE FOR APPROXIMATE TEMPERATURE TO RESISTANCE VALUES.

OK

INTERMITTENT FAULT IN SENSOR CIRCUIT OR CONNECTOR. IF ADDITIONAL CODES WERE STORED, SEE APPLICABLE CHART. IF NO CODES, REFER TO INTERMITTENTS SECTION "B".

NOT OK

REPLACE SENSOR.

BELOW 4 VOLTS

- CHECK VOLTAGE BETWEEN HARNESS CONNECTOR CKT 472 AND GROUND.

4 VOLTS OR OVER

CHECK FOR OPEN IN CKT 452 AND CHECK TERMINAL CONNECTIONS.

IF WIRE AND CONNECTIONS ARE OK, IT IS A FAULTY ECM.

BELOW 4 VOLTS

CHECK FOR OPEN IN CKT 472 AND CHECK TERMINAL CONNECTIONS.

IF WIRE AND CONNECTIONS ARE OK, IT IS A FAULTY ECM.

MAT SENSOR

TEMPERATURE TO RESISTANCE VALUES (APPROXIMATE)

°F	°C	OHMS
210	100	185
160	70	450
100	38	1,800
70	20	3,400
40	4	7,500
20	-7	13,500
0	-18	25,000
-40	-40	100,700

CLEAR CODES AND CONFIRM "CLOSED LOOP" OPERATION AND NO "SERVICE ENGINE SOON" LIGHT.

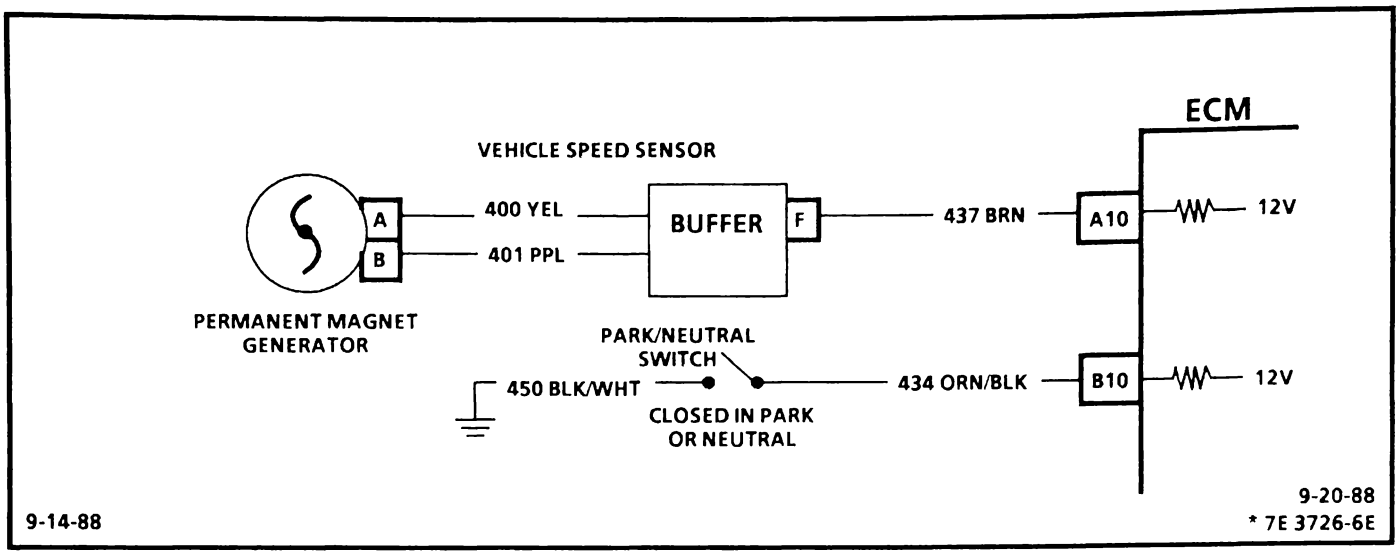

CODE 24

VEHICLE SPEED SENSOR (VSS) CIRCUIT 3.8L TURBO "F" CARLINE (PORT)

Circuit Description:

The Vehicle Speed Sensor (VSS) consists of a Permanent Magnet (PM) Generator, Buffer, Speedometer, and ECM. The PM Generator is a permanent magnet assembly attached to the transmission. As the vehicle moves, the generator creates a "sine wave" electrical pulse, which is routed to the buffer. In the buffer, the signal is changed from a "sine wave" to a "square wave" and amplified. The square wave is an "ON/OFF" signal. The length of time between pulses determines vehicle speed. The ECM sends a 12 volt signal out on CKT 437. The frequency by which the signal is pulsed low is used by the ECM to determine vehicle speed.

Test Description:

Numbers below refer to circled numbers on the diagnostic chart.

1. Code 24 will set if vehicle speed equals 0 mph when:
   - Engine speed is between 1100 and 4000 rpm.
   - TPS reading shows closed throttle.
   - Low load condition (Low Air Flow).
   - Not in park or neutral.
   - All conditions met for 20 seconds.
     These conditions are met during a road load deceleration.
2. This step checks to see if the fault is in CKT 437, including the ECM or the VSS/Buffer circuit covered in Section "8A". The ECM is the source of 12 volts via CKT 437 to the buffer in a normal working system.

NOTE: Disregard a Code 24 that sets when the drive wheels are not turning.

Diagnostic Aids:

An intermittent may be caused by a poor connection, rubbed through wire insulation, or a wire broken inside the insulation.

Check for:

- Poor Connection or Damaged Harness Inspect ECM harness connector terminal "A10" for improper mating, broken locks, improperly formed or damaged terminals, poor terminal to wire connection, and damaged harness.
- Intermittent Test If connections and harness check out OK, raise drive wheels, block other wheels, idle engine in low gear and "Scan" vehicle speed, while moving related connectors and wiring harnes. If the failure is induced, the "Vehicle Speed" display will change. This may help to isolate the location of the malfunction.

If "Scan" tool displays vehicle speed, check park/neutral switch, use CHART C-1A . If switch is OK, check for intermittent connections. An open or short to ground in CKT 437 will result in a Code 24. Refer to Section "8A" for complete wiring diagram.

Refer to "Intermittents" in Section "B".

CODE 24

VEHICLE SPEED SENSOR (VSS) 3.8L TURBO "F" CARLINE (PORT)

NOTE: TO PREVENT MISDIAGNOSIS, THE TECHNICIAN SHOULD REVIEW ELECTRICAL SECTION "8A" OR THE ELECTRICAL TROUBLESHOOTING MANUAL AND IDENTIFY THE TYPE OF VEHICLE SPEED SENSOR USED PRIOR TO USING THIS CHART. DISREGARD CODE 24 IF SET WHEN DRIVE WHEELS ARE NOT TURNING.

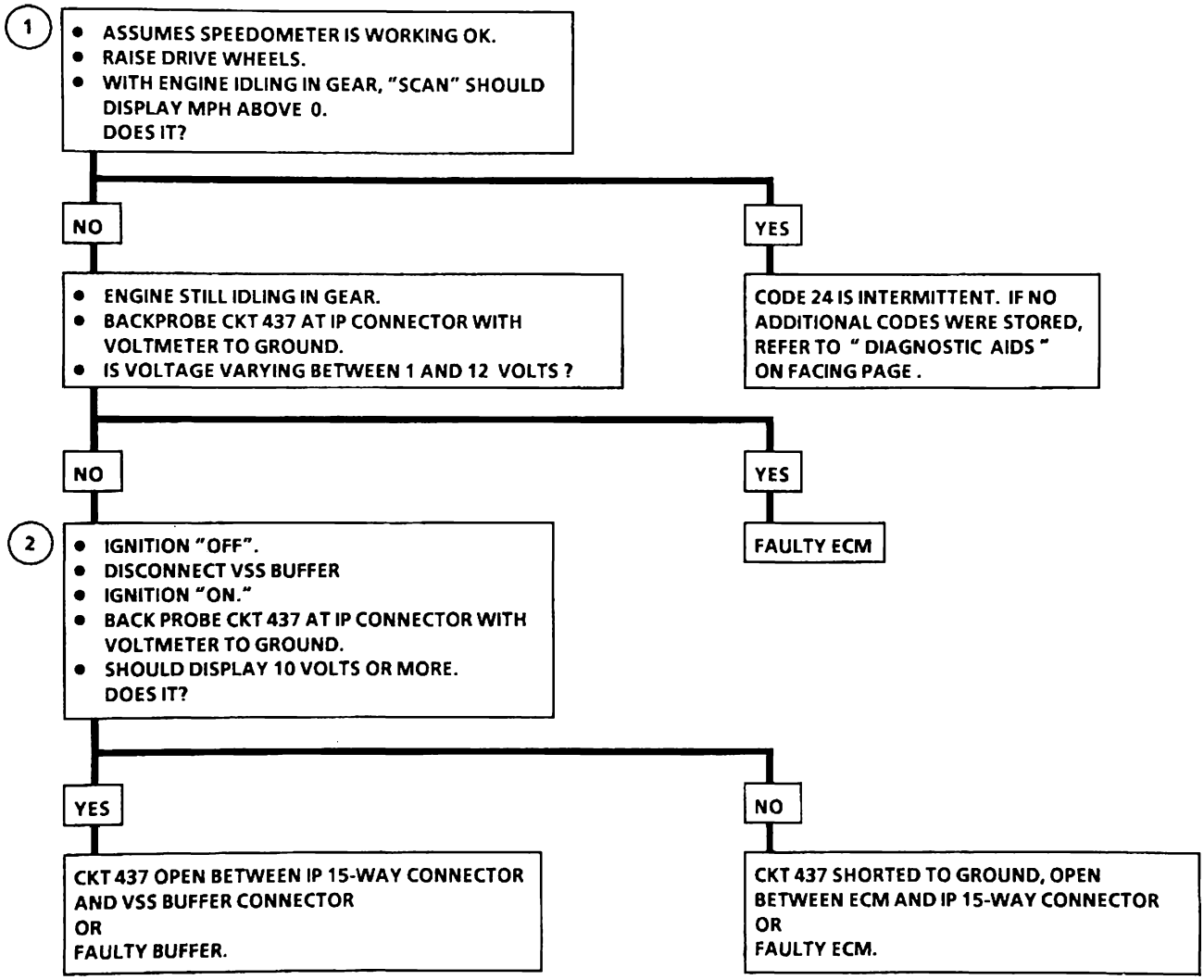

CLEAR CODES AND CONFIRM "CLOSED LOOP " OPERATION AND NO "SERVICE ENGINE SOON" LIGHT.

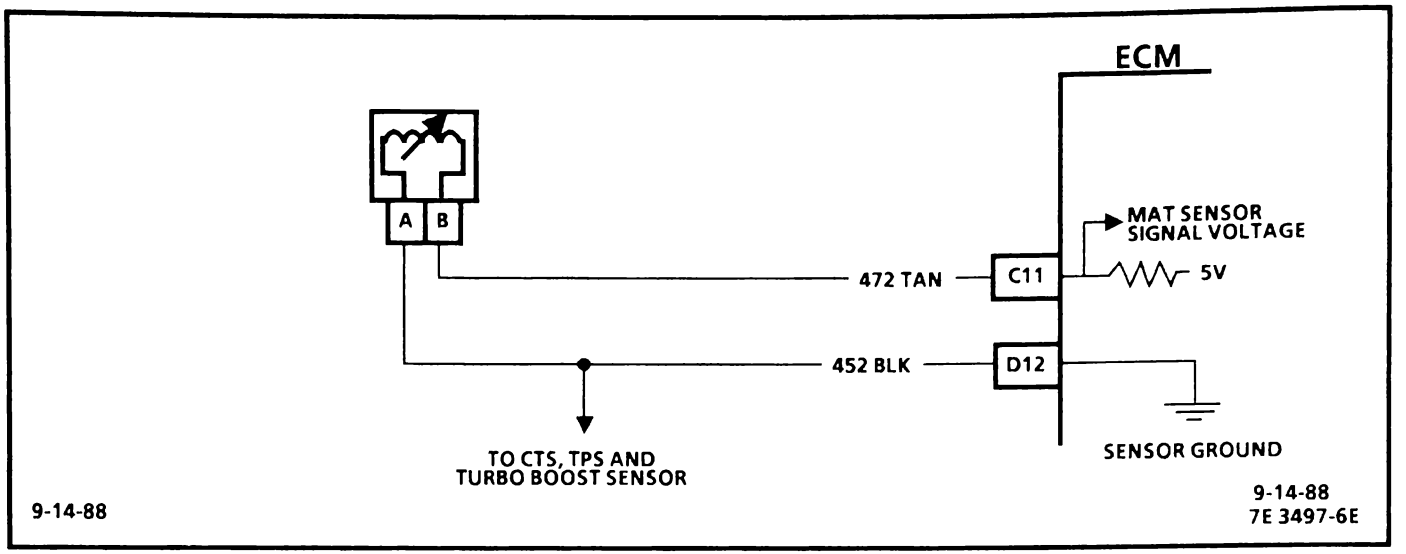

CODE 25

MANIFOLD AIR TEMPERATURE (MAT) SENSOR CIRCUIT
(HIGH TEMPERATURE INDICATED)
3.8L TURBO "F" CARLINE (PORT)

Circuit Description:

The Manifold Air Temperature (MAT) Sensor uses a thermistor to control the signal voltage to the ECM. The ECM applies a voltage (about 5 volts) on CKT 472 to the sensor. When manifold air is cold, the sensor (thermistor) resistance is high, therefore, the ECM will see a high signal voltage. If the manifold air is warm, the sensor (thermistor) resistance is low, therefore, the ECM will see a low signal voltage.

Test Description: Numbers below refer to circled numbers on the diagnostic chart.

Code 25 will set if:

- Signal voltage indicates a manifold air temperature greater than 135°C (275° F).
- A vehicle speed is present.
- Both of the above requirements are met for at least 30 seconds.

Due to the conditions necessary to set a Code 25, the "Service Engine Soon" light will only stay "ON" while the fault is present.

1. A "Scan" tool may not be used to diagnose this fault due to the ECM transmitting "default" (substitute) values, when the fault is present. If voltage is above 4 volts, the ECM and wiring are OK.
2. If the resistance is less than 100 ohms, replace the sensor.

Diagnostic Aids:

A "Scan" tool reads temperature of the air entering the engine, and should read close to ambient air temperature when engine is cold. Manifold air temperature should increase as the underhood temperature increases.

Check harness routing for possible short to ground in CKT 472.

Refer to "Intermittents" in Section "B".

If the engine has been allowed to sit overnight, the manifold air temperature and coolant temperature values should read within a few degrees of each other.

CODE 25

MANIFOLD AIR TEMPERATURE (MAT) SENSOR CIRCUIT
(HIGH TEMPERATURE INDICATED)
3.8L TURBO "F" CARLINE (PORT)

NOTE: A "SCAN" TOOL MAY NOT BE USED TO DIAGNOSE THIS FAULT, DUE TO THE ECM TRANSMITTING "DEFAULT" (SUBSTITUTE) VALUES WHEN THE FAULT IS PRESENT.

1
- DISCONNECT MAT SENSOR.
- IGNITION "ON," ENGINE STOPPED.
- CHECK VOLTAGE BETWEEN HARNESS CONNECTOR TERMINALS.

4 VOLTS OR OVER

2 CHECK RESISTANCE ACROSS MAT SENSOR TERMINALS. SHOULD BE MORE THAN 185 OHMS. SEE TABLE FOR APPROXIMATE TEMPERATURE TO RESISTANCE VALUES.

OK

INTERMITTENT FAULT IN SENSOR CIRCUIT OR CONNECTOR. IF ADDITIONAL CODES WERE STORED, SEE APPLICABLE CHART. IF NO CODES, REFER TO "INTERMITTENTS," SECTION "B".

NOT OK

REPLACE SENSOR

BELOW 4 VOLTS

CKT 472 SHORTED TO GROUND.
OR
CKT 472 SHORTED TO SENSOR GROUND CIRCUIT.
OR
FAULTY ECM.

MAT SENSOR

TEMPERATURE TO RESISTANCE VALUES (APPROXIMATE)

°F	°C	OHMS
210	100	185
160	70	450
100	38	1,600
70	20	3,400
40	4	7,500
20	-7	13,500
0	-18	25,000
-40	-40	100,700

CLEAR CODES AND CONFIRM "CLOSED LOOP" OPERATION AND NO "SERVICE ENGINE SOON" LIGHT.

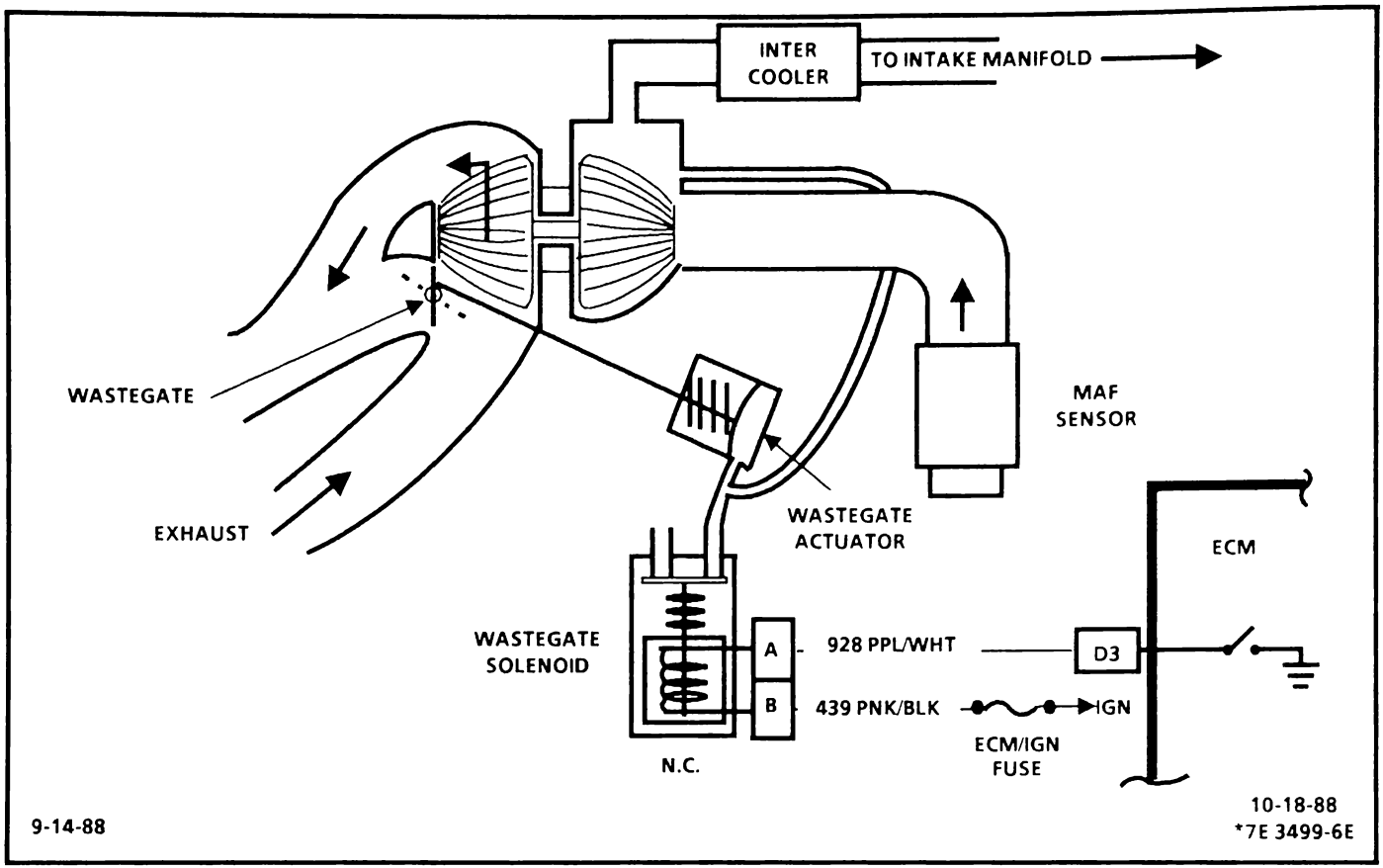

CODE 31

WASTEGATE SOLENOID ELECTRICAL 3.8L TURBO "F" CARLINE (PORT)

Circuit Description:

The wastegate solenoid is controlled by the Electric Control Module (ECM) to regulate the wastegate during boost conditions. The wastegate solenoid is pulsed at a calibrated duty cycle for smooth operation during boost and to prevent over boost which could seriously damage the engine. Wastegate monitor input to the ECM is received through CKT 928 and is checked by the ECM every 100 m/sec.

To set a Code 31, the following conditions must exist:

- Wastegate duty cycle command between 5% and 95%.
- No pulse received on wastegate monitor input.
- Conditions must be continously met for 2 seconds.

Test Description: Numbers below refer to circled numbers on the diagnostic chart.

1. Checks to see if CKT 928 is shorted to ground.
2. Tests for open CKT 928 to the ECM, grounding the diagnostic "test" terminal should turn "ON" the test light.
3. Locates the source of an open or short to voltage that is the problem.

CODE 31

WASTEGATE SOLENOID ELECTRICAL 3.8L TURBO "F" CARLINE (PORT)

A VISUAL CHECK OF LINKAGE AND VACUUM HOSES MUST BE PERFORMED PRIOR TO USING THE CHART.

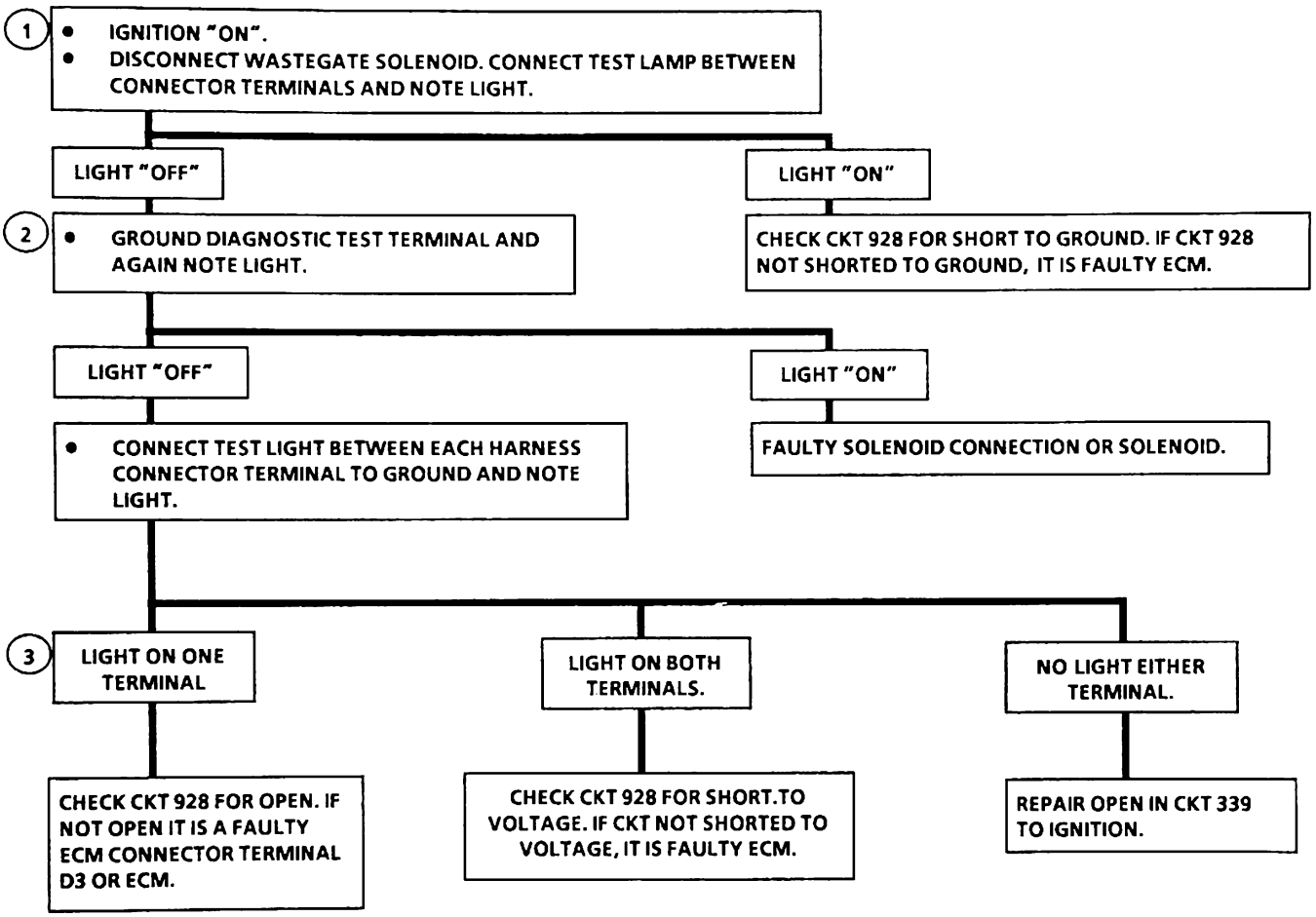

CLEAR CODES AND CONFIRM "CLOSED LOOP" OPERATION AND NO "SERVICE ENGINE SOON" LIGHT.

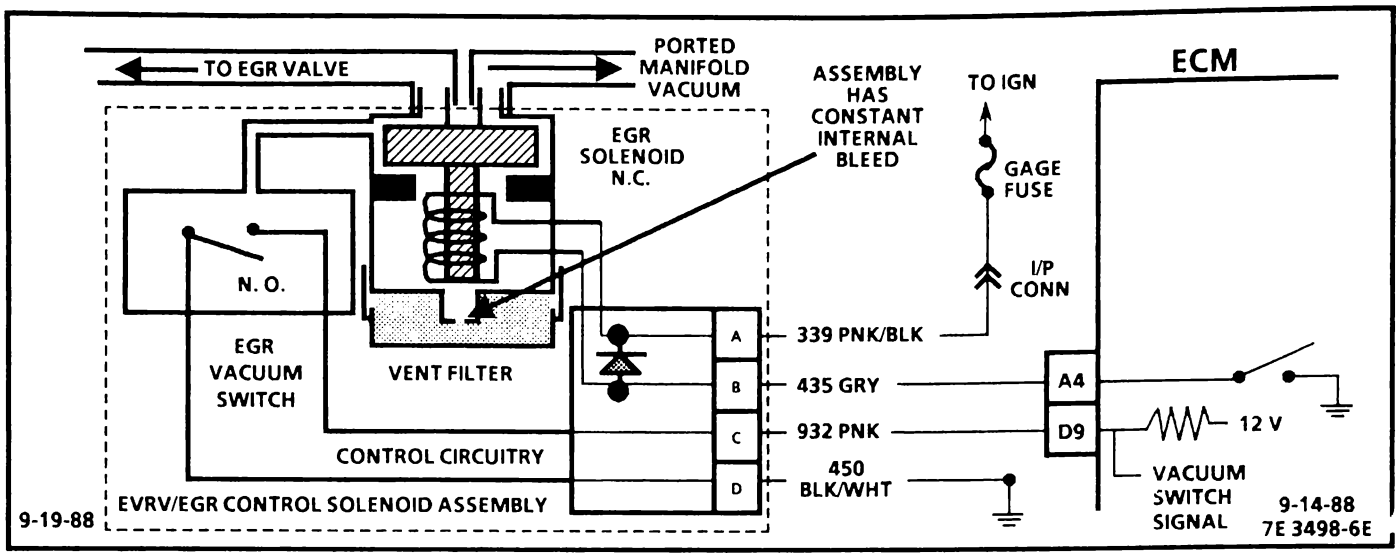

CODE 32

EXHAUST GAS RECIRCULATION (EGR) CIRCUIT 3.8L TURBO "F" CARLINE (PORT)

Circuit Description:

The Exhaust Gas Recirculation (EGR) Valve is opened by ported manifold vacuum. In order to control and monitor EGR application an Electronic Vacuum Regulator Valve (EVRV) is used. The EVRV is composed of two devices: 1. EGR Solenoid, normally closed (vacuum blocked). 2. EGR vacuum switch, normally open, (no current flow).

EGR vacuum control is accomplished by the ECM grounding CKT 435, which energizes the EGR Solenoid. This is done thousands of times a second. By varing the length of "ON" time, as compared to "OFF" time, Pulse Width Modulation (PWM). The ECM controls the vacuum source to the EGR Valve.

EGR is monitored by the ECM thru the EGR vacuum switch. The EGR vacuum switch, a normally open electrical switch, has an orfice built in which restricts the vacuum signal. When sufficient vacuum reaches the EGR vacuum switch to close the electrical switch, there should also be sufficient vacuum to open the EGR valve.

Code 32 will set, if the vacuum switch closes at idle, or, if it does not close under load (less than WOT).

- Engine running.
- Code 33 or 34 not present
- Coolant temperature above 42.5°C (108°F).
- LV8 reading on "Scan" tool less than 144 counts.
- No vacuum to EGR (switch open).
- Conditions exist over 9.6 seconds.

Test Description: Numbers below refer to circled numbers on the diagnostic chart.

1. "Scan" tool displays the condition of the EGR diagnostic switch in the "Diagnostic Mode". In park or neutral, the display should read "OFF" (open switch).
2. Under moderate engine load, the display will switch from "OFF" to "ON".
3. Checks the integrity of the 12 volts feed and ground circuits. If these circuits check OK, the fault is elsewhere in the EVRV/EGR control circuit.
4. A test light connected between terminals "A" and "B" will check for continuity of wiring and check for proper ECM operation.
5. If "ON" was displayed at idle, disconnect the EVRV harness. If display remains "ON" the fault is either a short to ground in CKT 932 or the ECM.
6. If the EGR display switches from "ON" to "OFF" when the EVRV is disconnected, the fault is either in the EVRV/EGR Solenoid, CKT 435 or the ECM. Probing at terminal "B" will further isolate the fault. If the test light is "ON", disconnect ECM A-B connector before checking CKT 435 for a short to ground since the short could be inside the ECM.

Diagnostic Aids:

An intermittent may be caused by a poor connection, rubbed through wire insulation or a wire broken inside the insulation. Check For:

- Poor Connection or Damaged Harness Inspect ECM harness connectors for backed out terminal "D9", improper mating, broken locks, improperly formed or damaged terminals, poor terminal to wire connection and damaged harness.
- Intermittent Test If connections and harness checks out OK, "Scan" EVRV switch, while moving related connectors and wiring harness. If the failure is induced, the "EVRV Switch" display will change. This may help to isolate the location of the malfunction.

CODE 32

EXHAUST GAS RECIRCULATION (EGR) CIRCUIT 3.8L TURBO "F" CARLINE (PORT)

1
- ENGINE IDLING.
- CHECK VACUUM HOSES FOR LEAKS OR RESTRICTIONS AND EGR SOLENOID FILTER FOR BEING PLUGGED. (VERIFY MINIMUM OF 51 kPa (15"HG)VACUUM AT THROTTLE BODY SIDE OF SOLENOID).
- "SCAN" EGR CONTROL VACUUM SWITCH.
- "OFF" (SWITCH OPEN) SHOULD BE DISPLAYED. IS IT?

YES →

2
- ENGINE STOPPED. RAISE DRIVE WHEELS AND BLOCK NON-DRIVE WHEELS.
- RE-START ENGINE.
- TRANS. IN DRIVE, "SCAN" EGR VACUUM SWITCH WHILE BRAKE TORQUING ENGINE TO 1800 RPM. (TIME SHOULD NOT EXCEED 15 SECONDS).
- "ON" (CLOSED SWITCH) SHOULD BE DISPLAYED. IS IT?

NO →

3
- LOWER VEHICLE, IGNITION "ON", ENGINE STOPPED.
- DISCONNECT EGR SOLENOID HARNESS AND CONNECT A TEST LIGHT BETWEEN HARNESS TERMINALS "A" AND "D".
- TEST LIGHT SHOULD BE "ON". IS IT?

YES →

4
- GROUND ALDL TEST TERMINAL "B".
- CONNECT TEST LIGHT ACROSS HARNESS TERMINALS "A" AND "B"
- TEST LIGHT SHOULD BE "ON". IS IT?

YES →

- USING DVM, CHECK VOLTAGE FROM HARNESS TERMINALS "C" TO "D".
- READING SHOULD BE APPROXIMATELY BATTERY VOLTAGE. IS IT?

NO →

OPEN CKT 932, FAULTY ECM CONNECTION OR ECM.

YES →

REPLACE EGR SOLENOID.

NO →

CKT 435 OPEN
OR
CKT 435 SHORTED TO B +
OR
FAULTY ECM CONNECTION OR ECM.

NO →

- CONNECT TEST LIGHT FROM TERMINAL "A" TO GROUND.
- TEST LIGHT SHOULD BE "ON". IS IT?

YES →

OPEN CKT 450.

NO →

OPEN CKT 339.

YES →

CODE IS INTERMITTENT. IF NO ADDITIONAL CODES WERE DISPLAYED, REFER TO "DIAGNOSTIC AIDS".

NO →

5
- KEY "ON", ENGINE NOT RUNNING.
- DISCONNECT EGR SOLENOID HARNESS.
- "OFF" (OPEN SWITCH) SHOULD BE DISPLAYED. IS IT?

YES →

6
- PROBE EGR SOLENOID HARNESS TERMINAL "B" WITH A TEST LIGHT TO 12V.
- TEST LIGHT SHOULD BE "OFF". IS IT?

YES →

REPLACE EGR SOLENOID ASSEMBLY.

NO →

CHECK CKT 435 FOR SHORT TO GROUND. IF OK REPLACE ECM.

NO →

CHECK CKT 932 FOR SHORT TO GROUND. IF OK, IT'S A FAULTY ECM.

CLEAR CODES AND CONFIRM "CLOSED LOOP" OPERATION AND NO "SERVICE ENGINE SOON" LIGHT.

9-14-88
7E 3483-6E

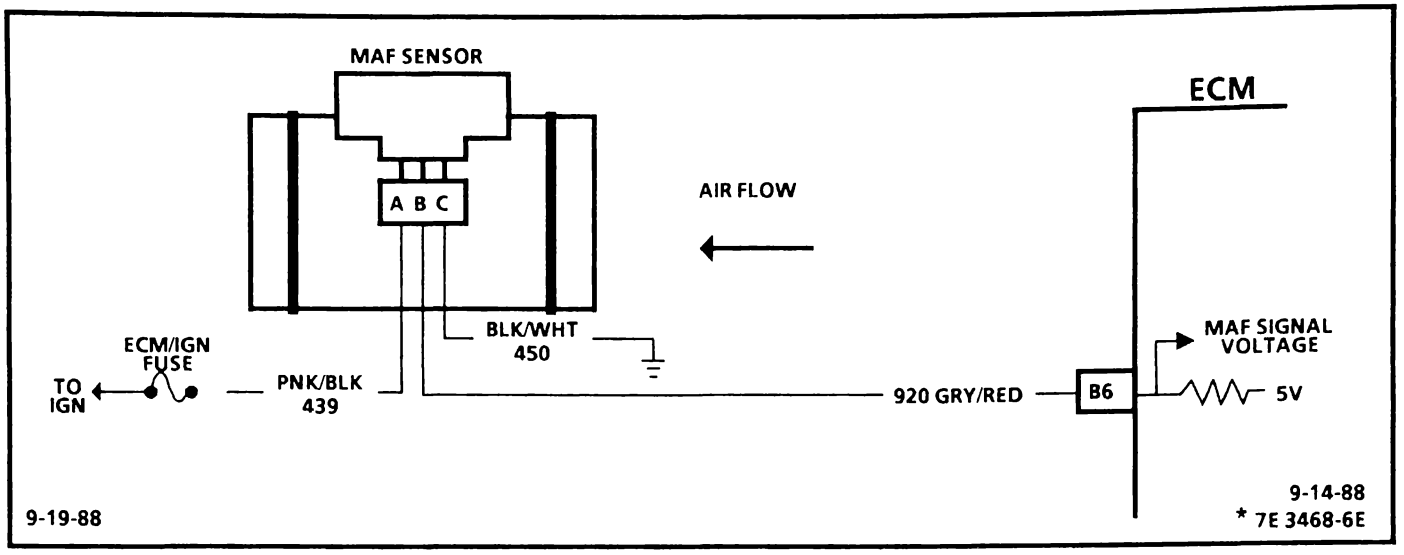

CODE 33

MASS AIR FLOW (MAF) SENSOR CIRCUIT
(GM/SEC HIGH)
3.8L TURBO "F" CARLINE (PORT)

Circuit Description:

The Mass Air Flow (MAF) sensor measures the flow of air entering the engine. The sensor produces a frequency output between 32 and 150 hertz (3 gm/sec to 150 gm/sec.). A large quantity of air movement (high frequency) through the MAF sensor indicates acceleration, and a small quantity of air movement (low frequency) indicates deceleration or idle. This information is used by the ECM for fuel control and is converted by a "Scan" tool to read out the air flow in grams per second. A normal reading is about 4-7 grams per second at idle and increases with rpm.

Test Description: Numbers below refer to circled numbers on the diagnostic chart.

1. Code 33 will set if:
   - Ignition "ON" and air flow exceeds 20 gms/sec.
     OR
   - Engine is running less than 800 rpm.
   - TPS is 10% or less.
   - Air flow greater than 150 grams per second (high frequency).
   - All of the above are met for 5 seconds or more.

Diagnostic Aids:

The "Scan" tool is not of much use in diagnosing this code, because, when the code sets, gm/sec will display a default value. However, it may be useful in comparing the signal of a problem MAF sensor with that of a known good MAF sensor on another vehicle.

Check For:

- Poor Connection or Damaged Harness Inspect ECM harness connectors for backed out terminal "B6", improper mating, broken locks, improperly formed or damaged terminals, poor terminal to wire conection, and damaged harness.
- Intermittent Test If connections and harness check out OK, "Scan" MAF sensor while moving related connectors and wiring harness. If the failure is induced the MAF sensor display will change. This may help to isolate the location of the malfunction.
- Mis-routed Harness Inspect MAF Sensor harness to insure that it is not too close to high voltage wires, such as spark plug leads.

CODE 33

MASS AIR FLOW (MAF) SENSOR CIRCUIT (GM/SEC HIGH) 3.8L TURBO "F" CARLINE (PORT)

1

- ENGINE IDLING, AT NORMAL OPERATING TEMPERATURE.
- "SCAN" MASS AIR FLOW (MAF).
- LESS THAN 25 GPS (GRAMS PER SECOND) SHOULD BE DISPLAYED. IS IT?

NO

VERIFY THAT MAF SENSOR HARNESS ROUTING IS CORRECT AWAY FROM HIGH VOLTAGE LEADS. IF OK, THE MAF SENSOR IS FAULTY.

YES

CODE IS INTERMITTENT. IF NO ADDITIONAL CODES WERE DISPLAYED, REFER TO "DIAGNOSTIC AIDS" ON FACING PAGE.

CLEAR CODES AND CONFIRM "CLOSED LOOP" OPERATION AND NO "SERVICE ENGINE SOON" LIGHT.

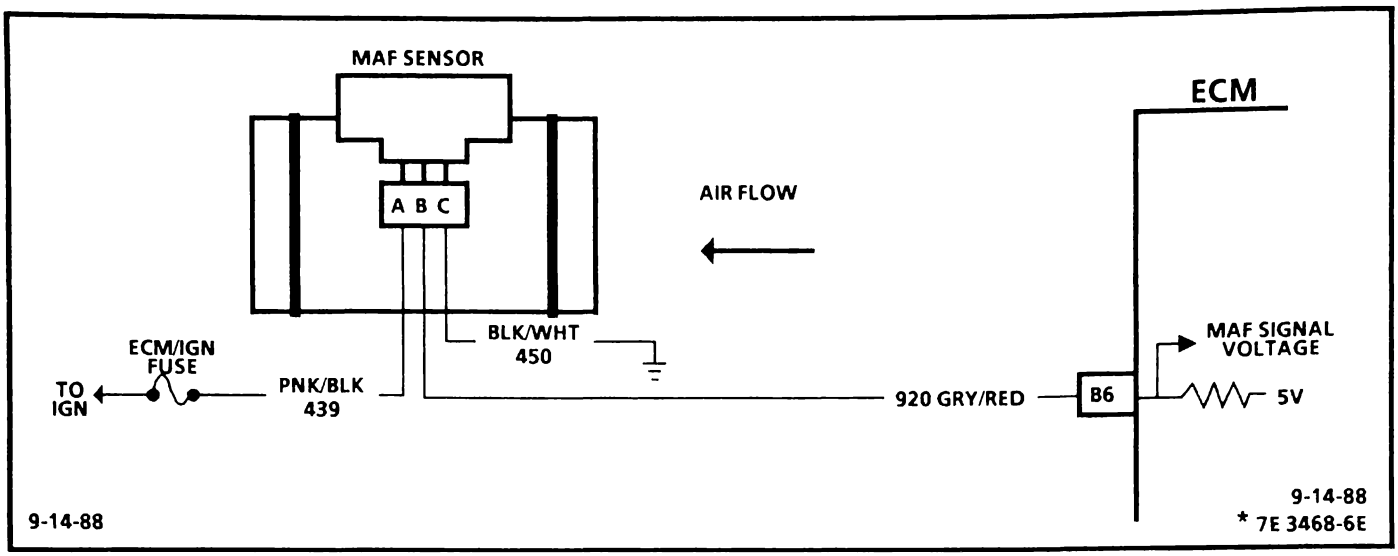

CODE 34

MASS AIR FLOW (MAF) SENSOR CIRCUIT
(GM/SEC LOW)
3.8L TURBO "F" CARLINE (PORT)

Circuit Description:

The Mass Air Flow (MAF) sensor measures the flow of air, which passes through it in a given time . The ECM uses this information to determine the operating condition of the engine to control fuel delivery. A large quantity of air movement through the MAF sensor indicates acceleration, while a small quantity of air movement indicates deceleration, or idle.

Code 34 will set, when either of the following sets of conditions exists:

- Engine running.
- No MAF sensor signal for 250 msec.

OR

- Engine running over 1400 rpm.
- TPS over 2.5 volts.
- Air flow less than 10 grams per second (low frequency).
- Above conditions for over 10 seconds.

Test Description: Numbers below refer to circled numbers on the diagnostic chart.

1. This step checks for a loose or damaged air duct, which could set Code 34 and also checks to see if the ECM recognizes a problem.
2. A voltage reading at the MAF sensor harness connector terminal "B" of less than 4 or over 6 volts indicates a fault in CKT 920 or poor connection
3. Verifies that both ignition voltage and a good ground circuit are available.

Diagnostic Aids:

An intermittent may be caused by a poor connection, mis-routed harness, rubbed through wire insulation, or a wire broken inside the insulation.

Check For:

- Poor Connection at ECM pin "B-6". Inspect harness connectors for backed out terminals, improper mating, broken locks, improperly formed or damaged terminals, and poor terminal to wire conection.
- Mis-routed Harness Inspect MAF Sensor harness to insure that it is not too close to high voltage wires, such as spark plug leads.
- Damaged Harness Inspect harness for damage. If harness appears OK, "Scan" while moving related connectors and wiring harness. A change in display would indicate the intermittent fault location.

CODE 34

MASS AIR FLOW (MAF) SENSOR CIRCUIT
(GM/SEC LOW)
3.8L TURBO "F" CARLINE (PORT)

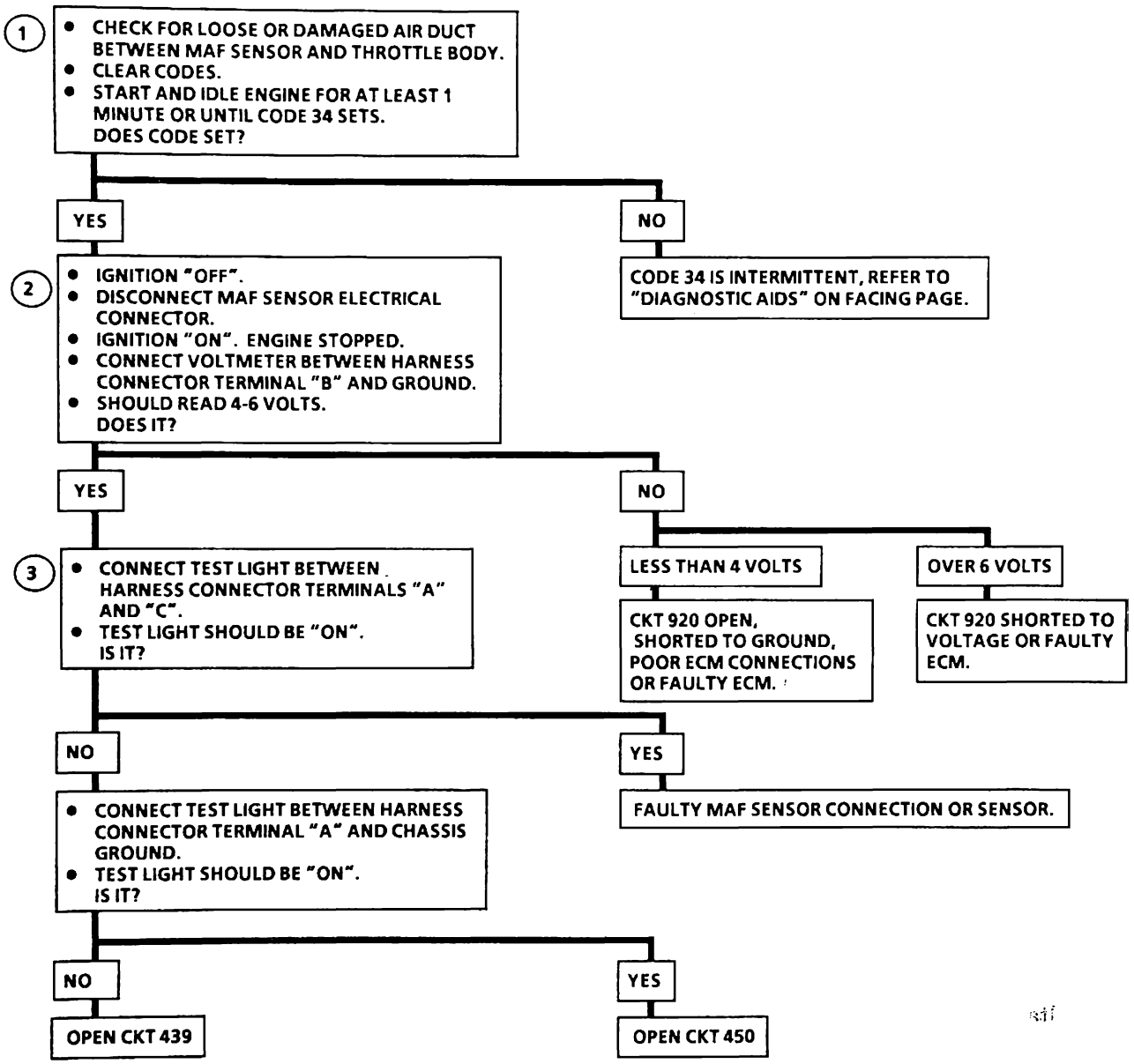

CLEAR CODES AND CONFIRM "CLOSED LOOP" OPERATION AND NO "SERVICE ENGINE SOON" LIGHT.

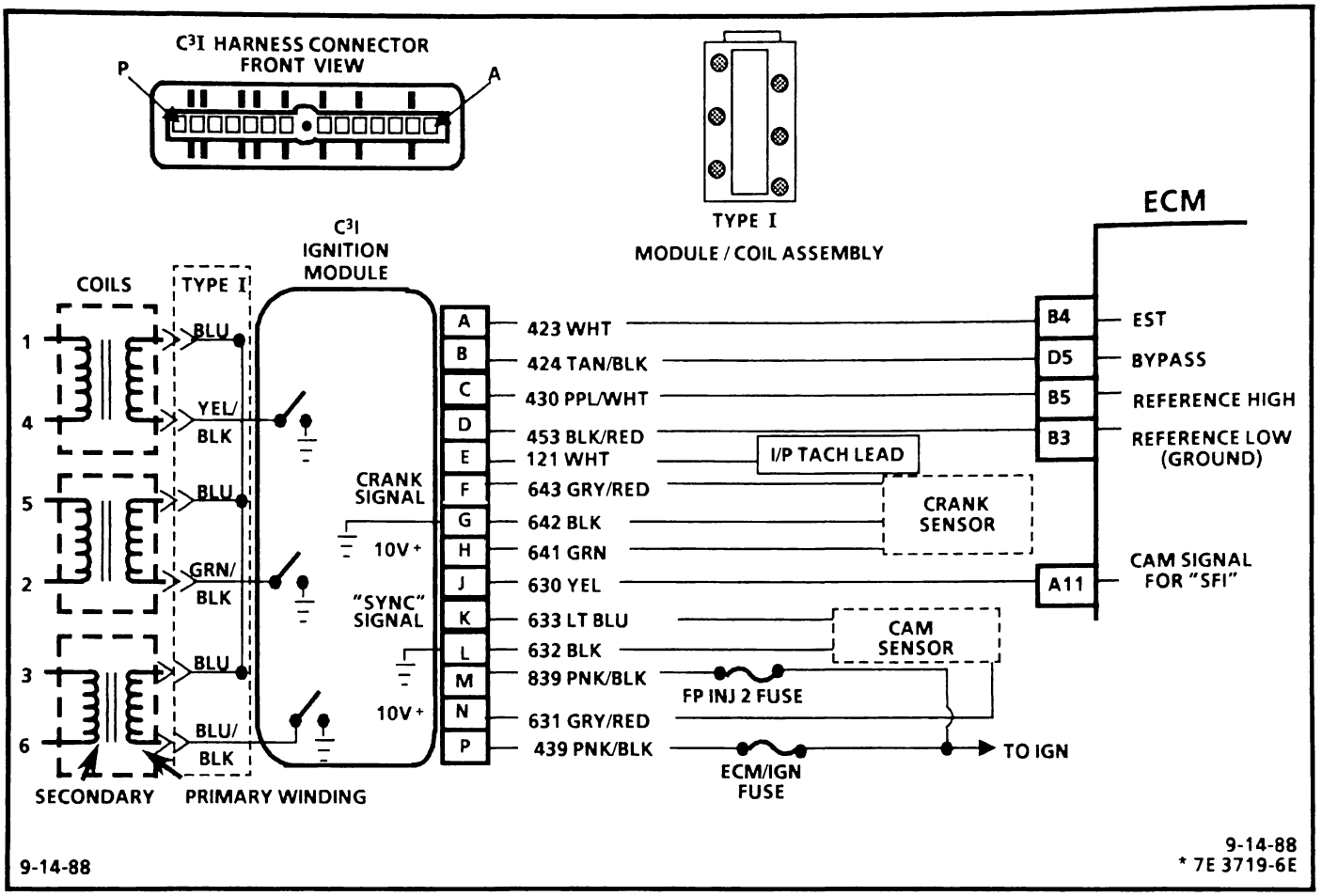

CODE 41

CAM SENSOR CIRCUIT
3.8L TURBO "F" CARLINE (PORT)

Circuit Description:

For timing of spark plug firing, a cam sensor "hall effect" switch is used. The cam sensor sends a signal (Sync-Pulse) to the ignition module, when cylinder #1 is 25° after top dead center on the compression stroke. This signal is used to start the correct coil firing sequence, and to enable sequential fuel injection. The engine will continue to run if the cam signal is lost while running. If the failure is in the cam signal output portion of the C3I module (terminal "J") or the "SFI" cam signal CKT 630 to ECM terminal "A11", the ECM will switch to the simultaneous fuel injection mode and continue to run. The engine can be re-started but will continue to run in the simultaneous mode as long as the fault is present. In either failure mode a Code 41 will be stored.

Code 41 is set when the following conditions are met:

- Engine is running.
- Cam sensor signal not received by ECM in last 1 second interval.

Test Description:

Numbers below refer to circled numbers on the diagnostic chart.

1. Checks to see if ECM recognizes a problem, and sets Code 41. If the engine cranks but will not start and a Code 41 was displayed, the fault is in the ignition system portion of the Cam sensor circuit and should be diagnosed using CHART A-3, "Cranks But Will Not Run".
2. The voltage to ECM terminal "A11" is supplied by the ignition module. If voltage reading is below 6 volts, the fault is in CKT 630, a poor connection at the C3I module, or a faulty C3I module.

Diagnostic Aids:

An intermittent may be caused by a poor connection, rubbed through wire insulation or a wire broken inside the insulation.

Check For:

- Poor Connection or Damaged Harness Inspect ECM harness connectors for backed out terminal "A11", improper mating, broken locks, improperly formed or damaged terminals, poor terminal to wire connection and damaged harness.
- Intermittent Test If connections and harness checks out OK, monitor A digital voltmeter connected from ECM terminal "A11" to ground while moving related connectors and wiring harness. If the failure is induced, the voltage reading will change. This may help to isolate the location of the malfunction.

CODE 41

CAM SENSOR CIRCUIT
3.8L TURBO "F" CARLINE (PORT)

(1)
- IF ENGINE CRANKS BUT WILL NOT RUN, USE CHART A-3.
- CLEAR CODES AND IDLE ENGINE FOR 2 MINUTES.
- DID "SERVICE ENGINE SOON" LIGHT COME "ON"?

YES

- "SCAN" FOR CODES.
- WAS CODE 41 DISPLAYED?

NO

CODE IS INTERMITTENT. IF NO ADDITIONAL CODES WERE DISPLAYED, REFER TO "DIAGNOSTIC AIDS" ON FACING PAGE.

YES

(2)
- IGNITION "OFF", DISCONNECT ECM "A-B" CONNECTOR AND CAM SENSOR HARNESS.
- IGNITION "ON", ENGINE STOPPED.
- USING DVM, CHECK VOLTAGE AT HARNESS TERMINAL "A11".
- VOLTAGE SHOULD BE OVER 6 VOLTS. IS IT?

NO

SEE APPLICABLE CODE CHART FOR CODE(S) DISPLAYED OTHER THAN 41.

YES

POOR CONNECTION AT ECM TERMINAL "A11" OR FAULTY ECM.

NO

CHECK CIRCUIT FROM C^3I MODULE TERM. "J" TO ECM TERM."A11" FOR OPEN OR SHORT TO GROUND. IF CIRCUIT IS OK, IT'S POOR CONNECTION AT C^3I MODULE OR FAULTY C^3I MODULE.

CLEAR CODES AND CONFIRM "CLOSED LOOP" OPERATION AND NO "SERVICE ENGINE SOON" LIGHT.

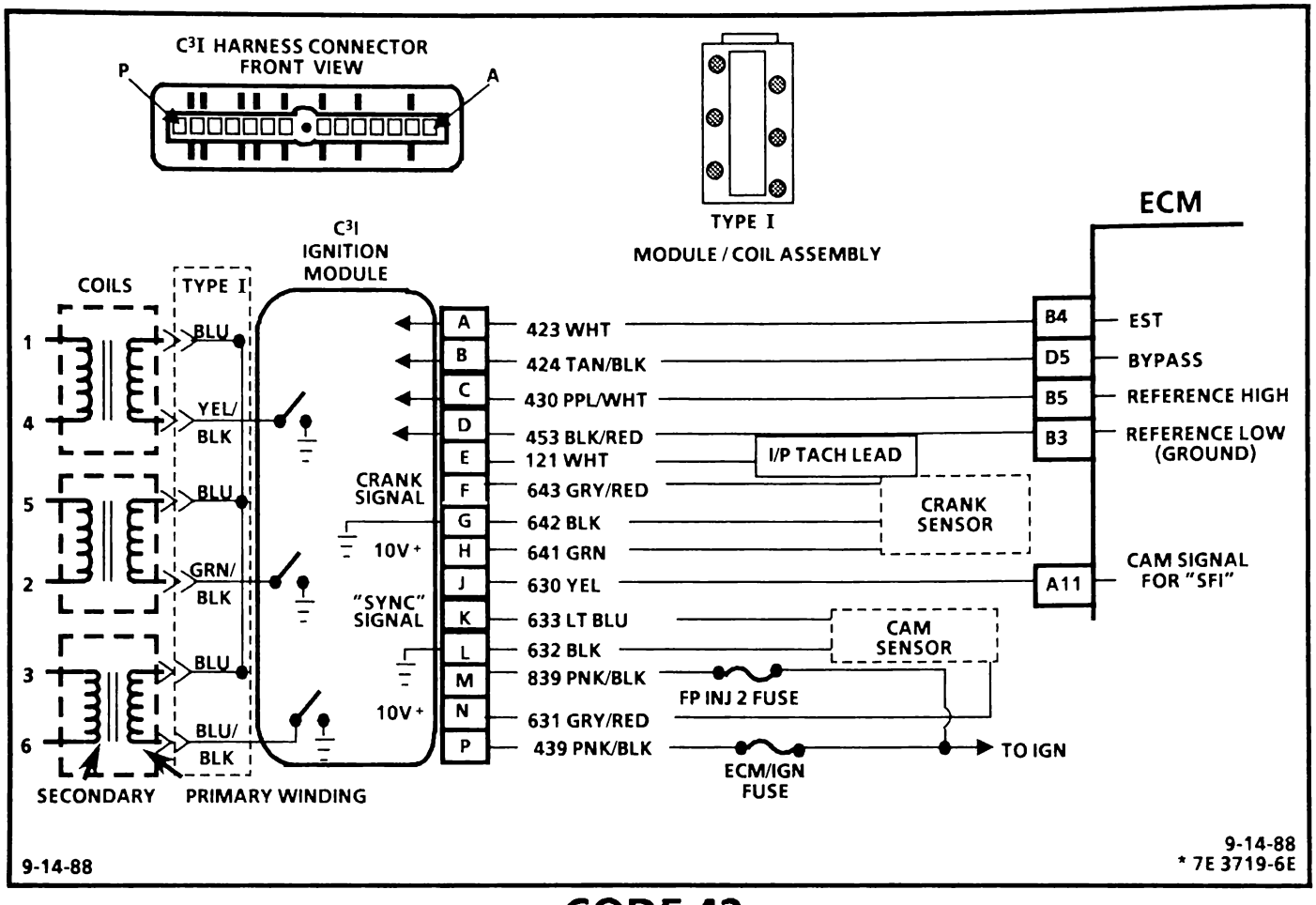

CODE 42

C3I EST OR BYPASS CIRCUIT FAILURE
3.8L TURBO "F" CARLINE (PORT)

Circuit Description:

The C3I module sends a reference signal to the ECM, when the engine is cranking. While the engine is under 400 rpm, the C3I module controls the ignition timing. When the engine speed exceeds 400 rpm the ECM sends a 5 volt signal on the Bypass CKT 424 to switch the timing to ECM control. The ECM controls EST through CKT 423. An open or ground in the EST circuit will stall the engine and set a Code 42. The engine can be re-started but will run on module timing.

To set a Code 42 the following conditions must be met:

- Engine speed greater than 600 rpm. with no EST pulse for 200 msec. (Open or Grounded CKT 423) or
- ECM commanding Bypass mode. (Open or Grounded CKT 424)

Test Description:

Numbers below refer to circled numbers on the diagnostic chart.

1. Checks to see if ECM recognizes a problem. If it does not set Code 42, at this point, it is an intermittent problem and could be due to a loose connection.
2. With the ECM disconnected, the ohmmeter should be reading less than 200 ohms, which is the normal resistance of the EST circuit through the C3I module. A higher resistance would indicate a fault in CKT 423, a poor C3I module connection, or a faulty C3I module.
3. If test light was "ON", when connected from 12 volts to ECM harness terminal "D5", either CKT 423 is shorted to ground, or the C3 I module is faulty.
4. Checks to see if C3I module switches when the bypass circuit is energized by 12 volts through the test light. If the C3I module actually switches, the ohmmeter reading should shift to over 8,000 ohms.
5. Disconnecting the ignition module should make the ohmmeter read as if it were monitoring an open circuit (infinite reading). Otherwise, CKT 423 is shorted to ground.

Diagnostic Aids:

An intermittent may be caused by a poor connection, rubbed through wire insulation or a wire broken inside the insulation. Check For:

- Poor Connection or Damaged Harness Inspect ECM harness connectors for backed out terminals "B4" or "D5", improper mating, broken locks, improperly formed or damaged terminals, poor terminal to wire connection and damaged harness.
- Intermittent Test If connections and harness checks out OK, a digital voltmeter connected from affected terminal to ground while moving related connectors and wiring harness. If the failure is induced, the voltage reading will change.

CODE 42

C3I EST OR BYPASS CIRCUIT FAILURE 3.8L TURBO "F" CARLINE (PORT)

1
- CLEAR CODES AND IDLE ENGINE FOR 2 MINUTES.
- DID "SERVICE ENGINE SOON" LIGHT COME "ON"?

YES
- IGNITION "ON", ENGINE STOPPED.
- "SCAN" CODES.
- WAS CODE 42 DISPLAYED?

NO
CODE IS INTERMITTENT. IF NO ADDITIONAL CODES DISPLAYED, REFER TO "DIAGNOSTIC AIDS".

YES

2
- IGNITION "OFF", DISCONNECT BOTH ECM CONNECTORS.
- IGNITION "ON", PROBE ECM HARNESS CONNECTOR TERMINAL "B4" WITH A OHMMETER TO GROUND.
- RESISTANCE SHOULD BE LESS THAN 200 OHMS. WAS IT?

NO
SEE APPLICABLE CODE CHART FOR CODE(S) DISPLAYED OTHER THAN 42.

YES

3
- IGNITION "ON", PROBE ECM HARNESS TERMINAL "D5" WITH A TEST LIGHT TO 12 VOLTS.
- TEST LIGHT SHOULD BE "OFF". IS IT?

NO
CHECK CKT 423 FOR OPEN. IF CKT 423 IS OK, IT'S POOR CONNECTION AT IGNITION MODULE TERMINAL "A" OR FAULTY IGNITION MODULE.

YES

4
- AS TEST LIGHT CONTACTED "D5", RESISTANCE FROM "B4" TO GROUND SHOULD SWITCH FROM UNDER 200 TO OVER 8,000 OHMS. DID IT ?

NO
- IGNITION "OFF", DISCONNECT IGNITION MODULE.
- IGNITION "ON", IS TEST LIGHT "OFF"?

YES
FAULTY C3I MODULE.

NO
CKT 424 SHORTED TO GROUND..

NO

5
- IGNITION "OFF", DISCONNECT IGNITION MODULE.
- RESISTANCE BETWEEN ECM TERMINAL "B4" AND GROUND SHOULD BE INFINITE (OPEN CIRCUIT). WAS IT?

YES
CHECK CKT 424 FOR OPEN. IF CKT 424 IS OK, IT'S POOR CONNECTION AT IGNITION MODULE TERMINAL "B" OR FAULTY IGNITION MODULE.

NO
CKT 423 SHORTED TO GROUND.

YES
- RECONNECT ECM AND IDLE ENGINE FOR 2 MINUTES.
- DID "SERVICE ENGINE SOON" LIGHT COME "ON"?

YES
IF CODE 42 IS STORED, ECM IS FAULTY.

NO
CHECK FOR INTERMITTENT CONNECTIONS.

CLEAR ALL CODES AND CONFIRM "CLOSED LOOP" OPERATION AND NO "SERVICE ENGINE SOON" LIGHT

9-11-87
7S 3487-6E

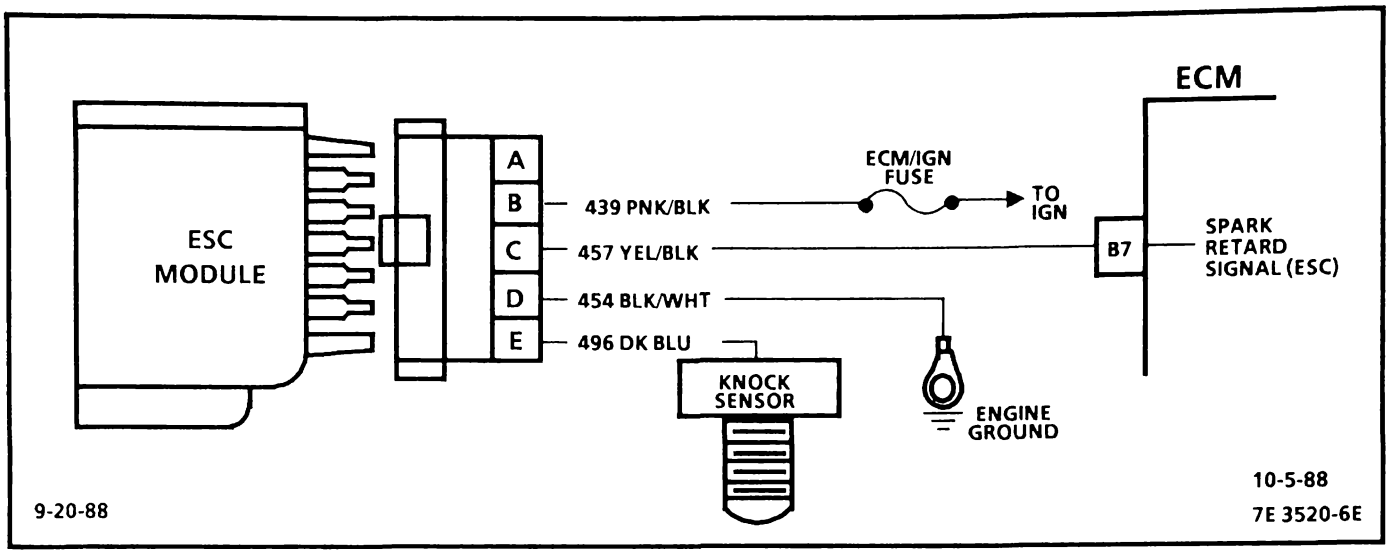

CODE 43

ELECTRONIC SPARK CONTROL (ESC) CIRCUIT
3.8L TURBO "F" CARLINE (PORT)

Circuit Description:

The ESC system consists of a knock sensor and an ESC module. The ESC module sends a voltage signal (8 to 10 volts) to the ECM. When the sensor detects detonation, the module turns "OFF" the circuit to the ECM and the voltage at ECM terminal "B7" drops to 0 volts. The ECM may retard spark timing as much as 20° in one (1) degree increments to reduce detonation.

A loss of the knock sensor signal or a loss of ground at the ESC module would cause the signal at the ECM to remain high. The ECM would control ignition timing (EST) as if no detonation were occuring. The EST would not be retarded, and detonation could become severe enough under heavy engine load conditions to result in pre-ignition and potential engine damage.

Loss of the ESC signal to the ECM would cause the ECM to constantly retard the EST to its maximum retard value. This could result in sluggish performance and cause a Code 43 to set.

Code 43 will set when:

- Engine Running.
- ESC input signal has been low more than 2.2 seconds.

Test Description: Numbers below refer to circled numbers on the diagnostic chart.

1. If the ECM Data (Knock Signal) display is fluctuating, the ECM is monitoring a low voltage signal on CKT 457 at ECM terminal "B7".
2. Probing ESC harness terminal "C" with a test light connected to 12 volts should result in the "Scan" tool (knock signal) display holding a steady reading, due to over 8 volts having been applied to ECM terminal "B7" through CKT 457.
3. If over 6 volts is measured at ECM terminal "B7", CKT 457 is OK and the fault is due to a poor connection at the ECM or the ECM is faulty.

Diagnostic Aids: An intermittent may be caused by a poor connection, rubbed through wire insulation or a wire broken inside the insulation.

Check For:

- Poor Connection or Damaged Harness Inspect ECM harness connectors for backed out terminal "B7", improper mating, broken locks, improperly formed or damaged terminals, poor terminal to wire connection and damaged harness.
- Intermittent Test If connections and harness checks out OK,"Scan" Knock Signal while moving related connectors and wiring harness. If the failure is induced, the Knock Signal display will change from "NO" to "YES". This may help to isolate the location of the malfunction.

CODE 43

ELECTRONIC SPARK CONTROL (ESC) CIRCUIT 3.8L TURBO "F" CARLINE (PORT)

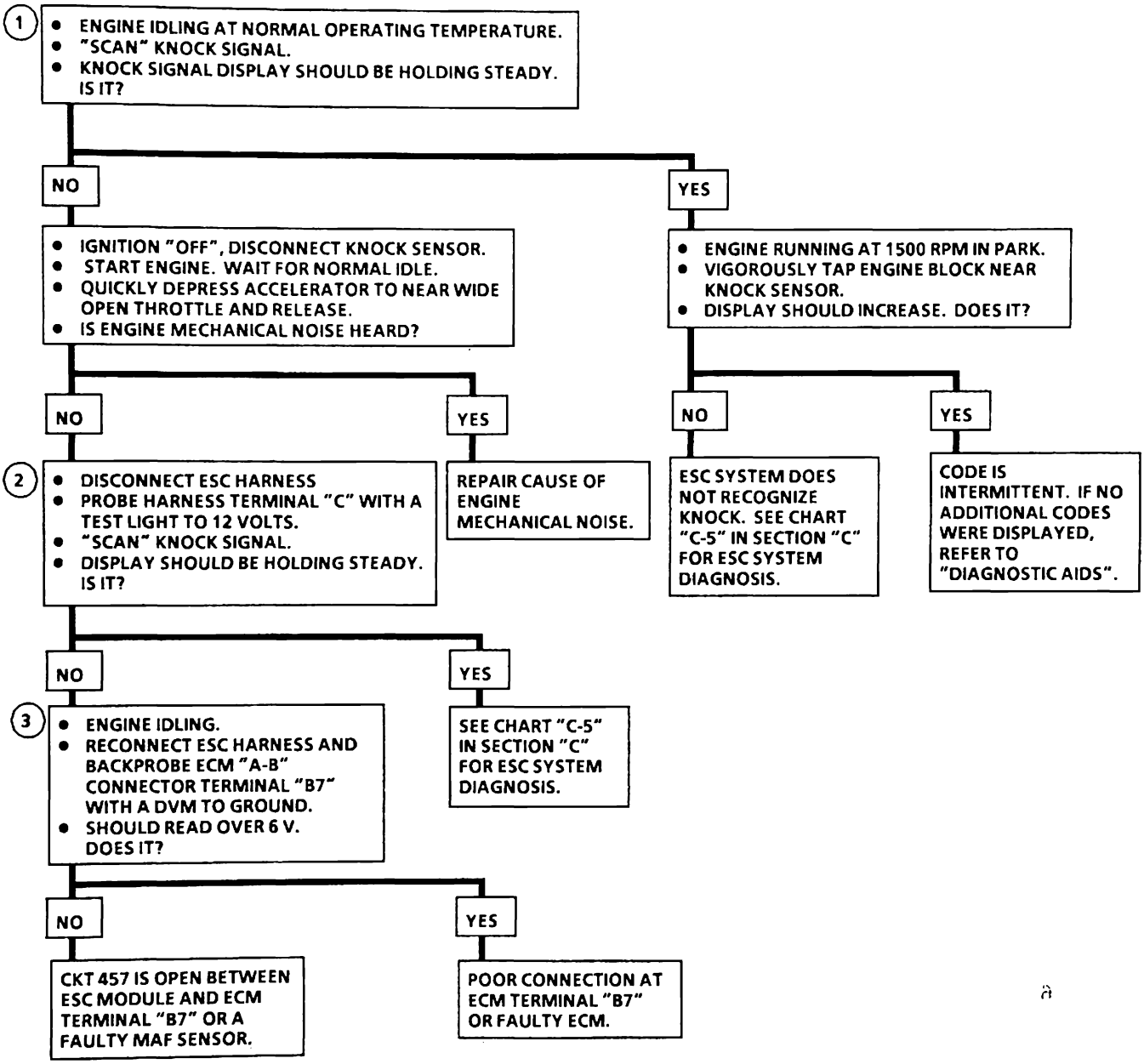

CLEAR ALL CODES AND CONFIRM "CLOSED LOOP" OPERATION AND NO "SERVICE ENGINE SOON" LIGHT

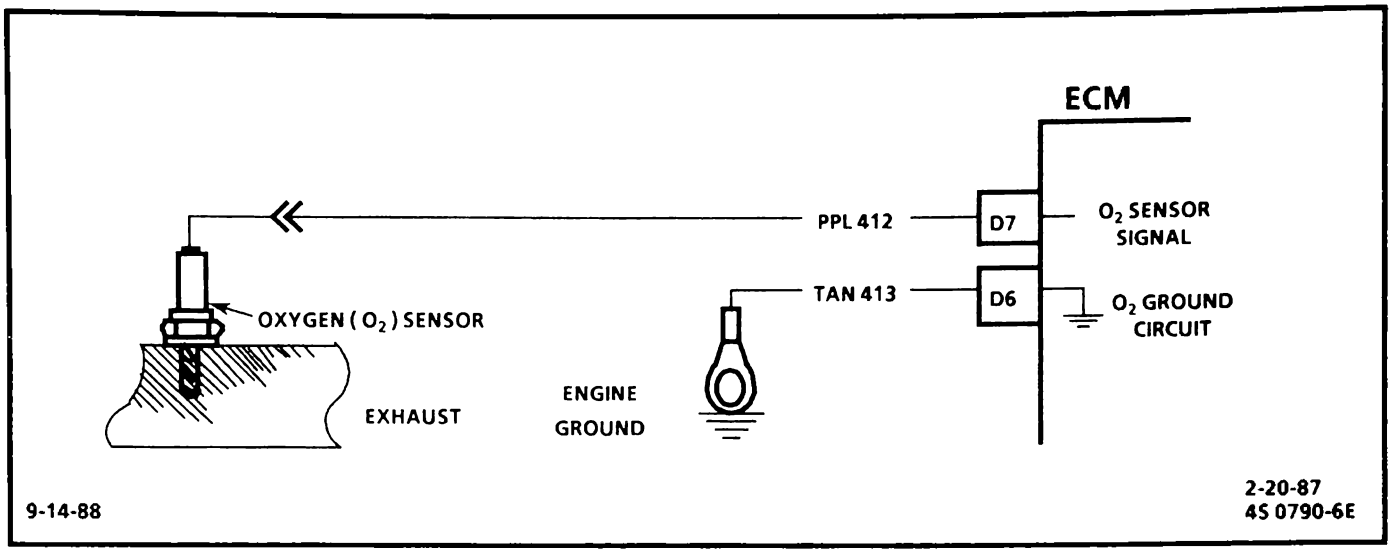

CODE 44

OXYGEN SENSOR CIRCUIT
(LEAN EXHAUST INDICATED)
3.8L TURBO "F" CARLINE (PORT)

Circuit Description:

The ECM supplies a voltage of about .45 volt (450 mV) between terminals "D6" and "D7". (If measured with a 10 megohm digital voltmeter, this may read as low as .32 volt.) The oxygen (O_2) sensor varies the voltage within a range of about 1 volt (1000 mv) if the exhaust is rich, down through about .10 volt (100 mV) if exhaust is lean.

The sensor is like an open circuit and produces no voltage when it is below about 360°C (600°F). An open sensor circuit or cold sensor causes "Open Loop" operation.

Test Description:

Numbers below refer to circled numbers on the diagnostic chart.

1. Code 44 is set when the O_2 sensor signal voltage on CKT 412.
   - Remains below .2 volt for 60 seconds or more:
   - And the system is operating in "Closed Loop".

Diagnostic Aids:

Using the "Scan" tool, observe the block learn values at different rpm and air flow conditions. The "Scan" tool also displays the block cells, so the block learn values can be checked in each of the cells to determine when the Code 44 may have been set. If the conditions for Code 44 exists the block learn values will be around 150.

- Oxygen Sensor wire Sensor pigtail may be mispositioned and contacting the exhaust manifold.
- Check for intermittent ground in wire between connector and sensor.
- MAF Sensor A Mass Air Flow (MAF) sensor output that causes the ECM to sense a lower than normal air flow will cause the system to go lean. Disconnect the MAF sensor and if the lean condition is gone, replace the MAF sensor.
- Lean Injector(s) Perform injector balance test CHART C-2A.
- Fuel Contamination Water, even in small amounts, near the in-tank fuel pump inlet can be delivered to the injectors. The water causes a lean exhaust and can set a Code 44.
- Fuel Pressure System will be lean if pressure is too low. It may be necessary to monitor fuel pressure while driving the car at various road speeds and/or loads to confirm, refer to "Fuel System Pressure Test" CHART A-7.
- Exhaust Leaks If there is an exhaust leak, outside air can be pulled into the exhaust stream and flow past the sensor causing a lean condition. Vacuum or crankcase leaks can cause a lean condition.
- If the above are OK, it is a faulty oxygen sensor.

CODE 44

OXYGEN SENSOR CIRCUIT (LEAN EXHAUST INDICATED) 3.8L TURBO "F" CARLINE (PORT)

1

- RUN WARM ENGINE (75°C/167°F TO 95°C/203°F) AT 1200 RPM.
- DOES "SCAN" TOOL INDICATE O_2 SENSOR VOLTAGE FIXED BELOW .35 VOLT (350 mV)?

YES

- DISCONNECT O_2 SENSOR.
- WITH ENGINE IDLING, "SCAN" TOOL SHOULD DISPLAY O_2 SENSOR VOLTAGE BETWEEN .35 VOLT AND .55 VOLT (350 mV AND 550 mV). DOES IT?

YES

REFER TO "DIAGNOSTIC AIDS" ON FACING PAGE.

NO

CKT 412 SHORTED TO GROUND OR FAULTY ECM.

NO

CODE 44 IS INTERMITTENT. IF NO ADDITIONAL CODES WERE STORED, REFER TO "DIAGNOSTIC AIDS" ON FACING PAGE.

CLEAR CODES AND CONFIRM "CLOSED LOOP" OPERATION AND NO "SERVICE ENGINE SOON" LIGHT.

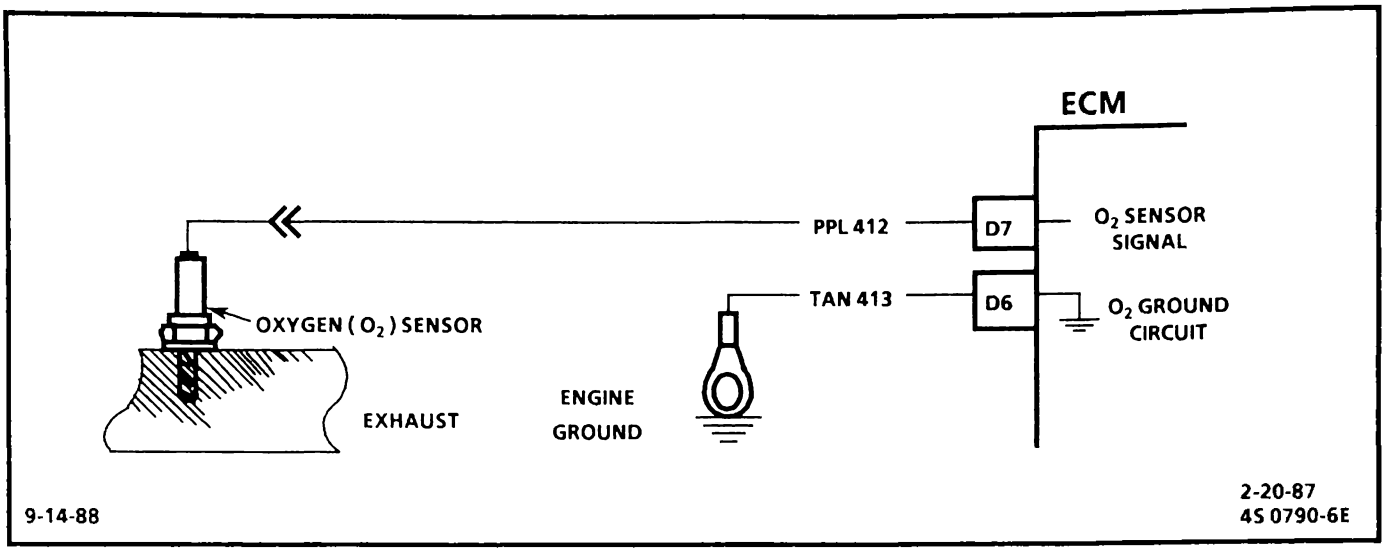

CODE 45

OXYGEN SENSOR CIRCUIT
(RICH EXHAUST INDICATED)
3.8L TURBO "F" CARLINE (PORT)

Circuit Description:

The ECM supplies a voltage of about .45 volt (450 mV) between terminals "D6" and "D7". (If measured with a 10 megohm digital voltmeter, this may read as low as .32 volt.) The oxygen (O_2) sensor varies the voltage within a range of about 1 volt (1000 mv) if the exhaust is rich, down through about .10 volt (100 mV) if exhaust is lean.

The sensor is like an open circuit and produces no voltage when it is below about 360°C (600°F) An open sensor circuit or cold sensor causes "Open Loop" operation.

Test Description: Numbers below refer to circled numbers on the diagnostic chart.

1. Code 45 is set when the O2 sensor signal voltage on CKT 412.
   - Remains above .7 volt for 30 seconds; and in "Closed Loop".
   - Engine time after start is 1 minute or more.
   - Throttle angle between 3% and 45%.

Diagnostic Aids:

Using the "Scan" tool, observe the block learn values at different rpm and air flow conditions. The "Scan" tool also displays the block cells, so the block learn values can be checked in each of the cells to determine when the Code 45 may have been set. If the conditions for Code 45 exists, the block learn values will be around 115.

- Fuel Pressure System will go rich if pressure is too high. The ECM can compensate for some increase. However, if it gets too high, a Code 45 may be set, refer to "Fuel System Pressure Test" CHART A-7.
- Rich Injector Perform injector balance test, use CHART C-2A.
- Leaking Injector Use CHART A-7.
- Check for fuel contaminated oil.
- Canister purge Check for fuel saturation. If full of fuel, check canister control and hoses. Use "Canister Purge" Section "C3".
- MAF sensor An output that causes the ECM to sense a higher than normal air flow can cause the system to go rich. Disconnecting the MAF sensor will allow the ECM to set a fixed value for the sensor. Substitute a different MAF sensor, if the the rich condition is gone while the sensor is disconnected.
- Check for leaking fuel pressure regulator diaphragm by checking vacuum line to regulator for fuel.
- TPS An intermittent TPS output will cause the system to go rich, due to a false indication of the engine accelerating.
- EGR An EGR valve staying open (especially at idle) will cause the O_2 sensor to indicate a rich exhaust, and this could result in a Code 45.

CODE 45

OXYGEN SENSOR CIRCUIT
(RICH EXHAUST INDICATED)
3.8L TURBO "F" CARLINE (PORT)

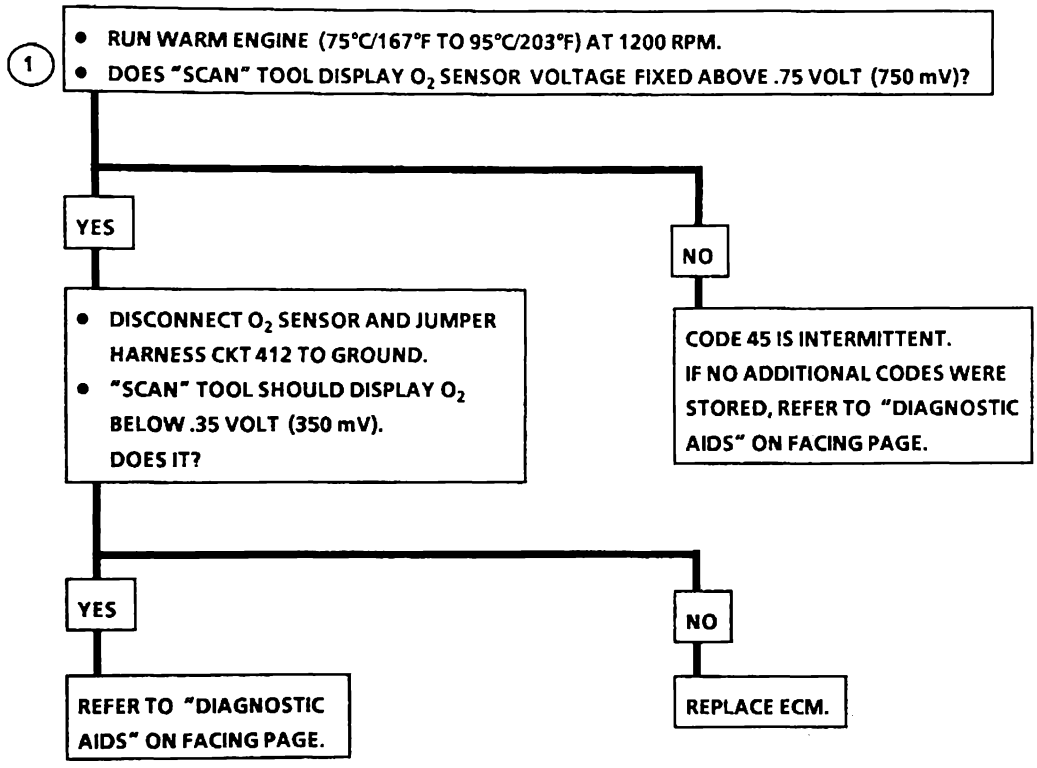

CLEAR CODES AND CONFIRM "CLOSED LOOP" OPERATION AND NO "SERVICE ENGINE SOON" LIGHT.

CODE 51

PROM ERROR
(FAULTY OR INCORRECT PROM)

CHECK THAT ALL PINS ARE FULLY INSERTED IN THE SOCKET. IF OK, REPLACE PROM, CLEAR MEMORY AND RECHECK. IF CODE 51 REAPPEARS, REPLACE ECM.

CLEAR ALL CODES AND CONFIRM "CLOSED LOOP" OPERATION AND NO "SERVICE ENGINE SOON" LIGHT

CODE 52

CALPAK ERROR
(FAULTY OR INCORRECT CALPAK)

CHECK THAT ALL PINS ARE FULLY INSERTED IN THE SOCKET. IF OK, REPLACE CALPAK, CLEAR MEMORY AND RECHECK. IF CODE 52 REAPPEARS, REPLACE ECM.

CLEAR ALL CODES AND CONFIRM "CLOSED LOOP" OPERATION AND NO "SERVICE ENGINE SOON" LIGHT

CODE 55

ECM ERROR

REPLACE ELECTRONIC CONTROL MODULE (ECM).

CLEAR ALL CODES AND CONFIRM "CLOSED LOOP" OPERATION AND NO "SERVICE ENGINE SOON" LIGHT

SECTION B
SYMPTOMS

TABLE OF CONTENTS

Preliminary Checks ..... Page B-1
Intermittents ..... Page B-2
Hard Start ..... Page B-2
Hesitation, Sag, Stumble ..... Page B-3
Surges and/or Chuggle ..... Page B-3
Lack of Power, Sluggish, or Spongy ..... Page B-4
Detonation/Spark Knock ..... Page B-4
Cuts Out, Misses ..... Page B-5
Backfire ..... Page B-5
Poor Fuel Economy ..... Page B-6
Dieseling, Run On ..... Page B-6
Excessive Exhaust Emissions or Odors ..... Page B-6
Rough, Unstable, or Incorrect Idle, Stalling ..... Page B-7
Chart B-1 - Restricted Exhaust System Check ..... Page B-8

IMPORTANT PRELIMINARY CHECKS

Before using this section you should have performed the "Diagnostic Circuit Check" and found out that:

1. The ECM and "Service Engine Soon" light are operating.
2. There are no trouble codes stored, or there is a trouble code but no "Service Engine Soon" light.

Verify the customer complaint, and locate the correct SYMPTOM below. Check the items indicated under that symptom.

If the ENGINE CRANKS BUT WILL NOT RUN, use CHART A-3.

Several of the symptom procedures below call for a careful visual/physical check. This check should include:

- ECM grounds for being clean and tight.
- Vacuum hoses for splits, kinks, and proper connections, as shown on Vehicle Emission Control Information label.
- Air leaks at throttle body mounting and intake manifold.
- Air leaks between MAF sensor and throttle body.
- Ignition wires for cracking, hardness, proper routing, and carbon tracking.
- Wiring for proper connections, pinches, and cuts.

The importance of this step cannot be stressed too strongly - it can lead to correcting a problem without further checks and can save valuable time.

INTERMITTENTS

Definition: Problem may or may not turn "ON" the "Service Engine Soon" light, or store a trouble code.

DO NOT use the Trouble Code Charts in Section "A" for intermittent problems. The fault must be present to locate the problem. If a fault is intermittent, use of Trouble Code Charts may result in replacement of good parts.

- Most intermittent problems are caused by faulty electrical connections or wiring. Perform a careful check as described at start of Section "B". Check for:
  - Poor mating of the connector halves, or terminals not fully seated in the connector body (backed out).
  - Improperly formed or damaged terminals. All connector terminals in problem circuit should be carefully reformed to increase contact tension.
  - Poor terminal to wire connection. This requires removing the terminal from the connector body to check. See "Introduction" to Section "6E" "Wiring Harness Service".
- If a visual/physical check does not find the cause of the problem, the car may be driven with a voltmeter connected to a suspected circuit. A "Scan" tool can also be used for monitoring input signals to the ECM to help detect intermittent conditions. An abnormal voltage, or "Scan" reading, when the problem occurs, indicates the problem may be in that circuit. If the wiring and connectors check OK and a trouble code was stored for a circuit having a sensor, except for Codes 43, 44, and 45, substitute a known good sensor and recheck.
- Loss of trouble code memory. To check, disconnect TPS and idle engine until "Service Engine Soon" light comes "ON". Code 22 should be stored, and kept in memory when ignition is turned "OFF". If not, the ECM is faulty.
- An intermittent "Service Engine Soon" light with no stored code may be caused by;
  - ECM grounds. See ECM wiring diagrams.
  - Ignition coil shorted to ground, arcing at spark plug wires or plugs.
  - "Service Engine Soon" light wire to ECM shorted to ground. (CHART A-2)
  - Diagnostic "Test" Terminal wire to ECM, shorted to ground. (CHART A-2)
- Check for an electrical system interference caused by a defective relay, ECM driven solenoid, or switch. They can cause a sharp electrical surge. Normally, the problem will occur when the faulty component is operated.
- Check for improper installation of electrical options, such as lights, 2-way radios, etc.
- EST wires should be kept away from spark plug wires. Wire from ECM to distributor (CKT 453) should be a good ground.
- Check for open diode across A/C compressor clutch, and for other open diodes, see wiring diagrams.

HARD START

Definition: Engine cranks OK, but does not start for a long time. Engine does eventually run, or may start but immediately dies.

- Perform careful visual/physical check as described at start of Section "B".
- Make sure driver is using correct starting procedure.
- **CHECK:**
  - TPS for sticking or binding or a high TPS voltage with the throttle closed.
  - High resistance in coolant sensor circuit or coolant temperature sensor itself. Use Code 15 Chart or with a "Scan" tool compare coolant temperature with ambient temperature on a cold engine.
  - Fuel system pressure, use CHART A-7.
  - For contaminated fuel.
  - EGR operation, Make sure valve seats properly and is not staying open, use CHART C-7.
  - Fuel pump relay, use CHART A-5.
  - Ignition system - Check for:
    - Proper Output with ST-125.
    - Bare and shorted wires.
    - Loose C3I module coil ground, mounting screws.
  - IAC operation, use CHART C-2C
- A faulty in-tank fuel pump check valve will allow the fuel in the lines to drain back to the tank after the engine is stopped. To check for this condition, perform "Fuel System Pressure Test," use CHART A-7.
- Remove spark plugs. Check for wet plugs, cracks, wear, improper gap, burned electrodes, or heavy deposits. Repair or replace as necessary.
- Basic engine problem, use Section "6".

HESITATION, SAG, STUMBLE

Definition: Momentary lack of response as the accelerator is pushed down. Can occur at all car speeds. Usually most severe when first trying to make the car move, as from a stop sign. May cause the engine to stall if severe enough.

- Perform careful visual/physical check as described at start of Section "B".
- **CHECK:**
  - Fuel system pressure, use CHART A-7, also check for water contaminated fuel.
  - Air leaks at air duct between MAF sensor and throttle body.
  - Spark plugs for being fouled or faulty wiring.
  - PROM number. Also check Service Bulletins for latest PROM.
  - TPS for binding or sticking. Voltage should increase at a steady rate as throttle is moved toward WOT.
  - Turbocharger, refer to Section "6J".
  - Generator output voltage. Repair if less than 9 or more than 16 volts.
  - C^3I module ground, CKT 453.
  - Canister purge system for proper operation, use CHART C-3.
  - EGR operation, use CHART C-7.
  - Engine thermostat, functioning correctly and proper heat range.
- Perform injector balance test, use CHART C-2A.

SURGES AND/OR CHUGGLE

Definition: Engine power variation under steady throttle or cruise. Feels like the car speeds up and slows down with no change in the accelerator pedal.

- Make sure driver understands Transmission Converter Clutch and A/C compressor operation in Owner's Manual.
- Perform careful visual/physical inspection as described at start of Section "B".
- **CHECK:**
  - Loose or leaking air duct between MAF sensor and throttle body.
  - Generator output voltage. Repair if less than 9 or more than 16 volts.
  - EGR - there should be no EGR at idle. Refer to CHART C-7.
  - EGR filter for being plugged .
  - Vacuum lines for kinks or leaks.
  - In-line fuel filter. Replace if dirty or plugged.
  - Fuel pressure while condition exists, use CHART A-7.
- Inspect Oxygen sensor for silicon contamination from fuel, or use of improper RTV sealant. The sensor may have a white, powdery coating and result in a high but false signal voltage (rich exhaust indication). The ECM will then reduce the amount of fuel delivered to the engine, causing a severe driveability problem.
- Remove spark plugs. Check for cracks, wear, improper gap, burned electrodes, or heavy deposits. Also check condition of the spark plug wires.
- To help determine if the condition is caused by a rich or lean system, the car should be driven at the speed of the complaint. Monitoring block learn at the complaint speed will help identify the cause of the problem. If the system is lean (block learn greater than 138), refer to "Diagnostic Aids" on facing page of Code 44. If the system is running rich (block learn less than 118), refer to "Diagnostic Aids" on facing page of code 45.

LACK OF POWER, SLUGGISH, OR SPONGY

Definition: Engine delivers less than expected power. Little or no increase in speed when accelerator pedal is pushed down part way.

- Perform careful visual/physical check as described at start of Section "B".
- If "Scan" tool readings are normal (see facing page of "Diagnostic Circuit Check") and there are no engine mechanical faults, fill fuel tank with a premium gasoline that has a minium octane rating of 92 and reevaluate vehicle performance.
- Compare customer's car to similar unit. Make sure the customer's car has an actual problem.
- Remove air cleaner and check air filter for dirt, or for being plugged. Replace as necessary.
- **CHECK:**
  - For loose or leaking air duct between MAF sensor and throttle body.
  - Restricted fuel filter, contaminated fuel or improper fuel pressure, use CHART A-7.
  - ECM grounds for being clean and tight, use wiring diagrams.
  - EGR operation for being open or partly open all the time. Use CHART C-7
  - Turbocharger, refer to Section "6J".
  - Exhaust system for possible restriction, use Chart B-1.
  - Inspect for possible plugged catalytic converter.
  - Inspect exhaust system for damaged, collapsed or leaking pipes and manifolds.
  - Inspect muffler for heat distress or possible internal failure.
  - Generator output voltage. Repair if less than 9 or more than 16 volts.
  - Engine valve timing and compression.
  - Engine for correct or worn camshaft, refer to Section "6A".
  - Secondary voltage using a shop oscilliscope or a spark tester J-26792 (ST-125) or equivalent.

DETONATION /SPARK KNOCK

Definition: A mild to severe ping, usually worse under acceleration. The engine makes sharp metallic knocks that change with throttle opening. Sounds like popcorn popping.

- If "Scan" tool readings are normal (see facing page of "Diagnostic Circuit Check") and there are no engine mechanical faults, fill fuel tank with a premium gasoline that has a minium octane rating of 92 and reevaluate vehicle performance.
- Check for obvious overheating problems:
  - Low engine coolant.
  - Loose water pump belt.
  - Restricted air flow to radiator, or restricted water flow thru radiator.
  - Inoperative electric cooling fan circuit, use Chart C-12.
  - Correct coolant solution should be a 50/50 mix of GM #1052753 anti-freeze coolant (or equivalent) and water.
- **CHECK:**
  - EGR system for not opening, use CHART C-7.
  - TCC operation, use CHART C-8.
  - Fuel system pressure, use CHART A-7.
  - PROM - Make sure it's the correct one, See Service Bulletins for latest PROM.
  - Valve oil seals for leaking.
- Check for incorrect basic engine parts such as cam, heads, pistons, etc.
- Remove carbon with top engine cleaner, follow instructions on can.
- Turbocharger overboost, refer to Section "6J".
- Check ESC system, use CHART C-5.
- To help determine if the condition is caused by a rich or lean system, the car should be driven at the speed of the complaint. Monitoring block learn at the complaint speed will help identify the cause of the problem. If the system is lean (block learn greater than 138), refer to "Diagnostic Aids]" on facing page of Code 44. If the system is running rich (block learn less than 118), refer to "Diagnostic Aids" on facing page of Code 45.

CUTS OUT, MISSES

Definition: Steady pulsation or jerking that follows engine speed, usually more pronounced as engine load increases. The exhaust has a steady spitting sound at idle or low speed.

- Perform careful visual/physical check as described at start of Section "B".
- Check for missing cylinder by:
  1. Start engine, allow engine to stablize then disconnect IAC motor. Remove one spark plug wire at a time, using insulated pliers.

     CAUTION: Do not perform this test for more than 2 minutes, as this may cause damage to the catalytic converter.
  2. If there is an rpm drop on all cylinders (equal to within 50 rpm), go to ROUGH, UNSTABLE, OR INCORRECT IDLE, STALLING symptom. Reconnect IAC motor.
  3. If there is no rpm drop on one or more cylinders, or excessive variation in drop, check for spark on the suspected cylinder(s) using a shop oscilliscope or with J 26792 (ST-125) Spark Tester or equivalent. If no spark, see Section "6D" for Intermittent Operation or Miss. If there is spark, remove spark plug(s) in these cylinders and check for:
     - Cracks
     - Wear
     - Improper Gap
     - Burned Electrodes
     - Heavy Deposits
- Perform compression check on questionable cylinder(s) found above. If compression is low, repair as necessary, refer to Section "6".
- Disconnect all injector harness connectors. Connect J-34730-2 Injector Test Light or equivalent 6 volt test light between the harness terminals, of each injector connector and note light while cranking. If test light fails to blink at any connector, it is a faulty injector drive circuit harness, connector, or terminal.
- Perform the Injector Balance Test, use CHART C-2A.
- **CHECK:**
  - Spark plug wires by connecting ohmmeter to ends of each wire in question. If meter reads over 30,000 ohms, replace wire(s).
  - Fuel System - Plugged fuel filter, water, low pressure, use CHART A-7.
  - Spray plug wires with fine water mist to check for shorts.
- A miss condition can be caused by Electromagnetic Interference (EMI) on the reference circuit. EMI can usually be detected by monitoring engine rpm with a "Scan" tool. A sudden increase in rpm with little change in actual engine rpm change, indicates EMI is present. If the problem exists, check routing of secondary wires , check all distributor ground circuits.
- Remove rocker covers. Check for bent pushrods, worn rocker arms, broken valve springs, worn camshaft lobes, valve timing. Repair as necessary, refer to Section "6A".
- Check for an erratic VSS signal, by monitoring the VSS signal with a "Scan" tool. A false VSS signal that activates the high road speed fuel cut-off will result in a severe driveability problem.

BACKFIRE

Definition: Fuel ignites in intake manifold, or in exhaust system, making a loud popping noise.

- **CHECK:**
  - Loose wiring connector or air duct at MAF sensor
  - Compression - Look for sticking or leaking valves.
  - Valve timing, refer to Section "6".
  - EGR operation for being open all the time, use CHART C-7.
  - EGR gasket for faulty or loose fit .
  - Inspect spark plug wires for crossfire and proper routing of plug wires.
  - Ignition system for intermittent condition, use Section "6D".
  - Perform fuel system diagnosis check, use CHART A-7.
  - Perform injector balance test, use CHART C-2A.
  - Output voltage of ignition coil using a shop oscilliscope or spark tester J-26792 (ST-125) or equivalent.

POOR FUEL ECONOMY

Definition: Fuel economy, as measured by an actual road test, is noticeably lower than expected. Also, economy is noticeably lower than it was on this car at one time, as previously shown by an actual road test.

- Perform careful visual/physical check as described at start of Section "B".
- Check owners driving habits. Fuel consumption will increase if the engine is operated under turbo boost conditions.
- **CHECK:**
  - Engine coolant level.
  - Engine thermostat for faulty part (always open) or for wrong heat range, refer to Section "6B".
  - TCC for proper operation, use CHART C-8.
  - Induction system and crankcase for air leaks.
  - Exhaust restriction, use CHART B-1.
  - Compression, refer to Section "6"

DIESELING, RUN-ON

Definition: Engine continues to run after key is turned off, but runs very roughly. If engine runs smoothly, check ignition switch and adjustment.

- Check injectors for leaking, use CHART A-7.

EXCESSIVE EXHAUST EMISSIONS OR ODORS

Definition: Vehicle fails an emission test. Vehicle has excessive "rotten egg" smell. Excessive odors do not necessarily indicate excessive emissions.

- Perform "Diagnostic Circuit Check".
- IF TEST SHOWS HIGHER THAN NORMAL CO AND HC, (also has excessive odors):
  - Check items which cause car to run RICH.
  - Make sure engine is at normal operating temperature.
- **CHECK**:
  - Fuel system pressure, use CHART A-7.
  - Fuel vapor canister for fuel loading, use CHART C-3.
  - Injector balance, use CHART C-2A.
  - PCV valve for being plugged, stuck, or blocked PCV hose or fuel in the crankcase.
  - Spark plugs, plug wires, and ignition components, refer to Section "6D".
  - Check for lead contamination of catalytic converter (look for removal of fuel filler neck restrictor).
  - Check for properly installed fuel cap.
- If the system is running rich (block learn less than 118), refer to "Diagnostic Aids" on facing page of Code 45.
- IF TEST SHOWS EXCESSIVE NOx:
  - Check items which cause car to run LEAN, or run too hot.
  - EGR valve for not opening, use CHART C-7.
  - Vacuum leaks.
  - Coolant system and coolant fan for proper operation, use CHART C-12 .
  - Remove carbon with top engine cleaner, follow instructions on can.
- If the system is running lean (block learn greater than 138), refer to "Diagnostic Aids" on facing page Code 44.

ROUGH, UNSTABLE, OR INCORRECT IDLE, STALLING

Definition: The engine runs unevenly at idle. If bad enough, the car may shake. Also, the idle may vary in rpm (called "hunting"). Either condition may be bad enough to cause stalling. Engine idles at incorrect speed.

- Perform careful visual/physical check as described at start of Section "B".
- **CHECK:**
  - Vacuum leaks.
  - ECM grounds for being clean and tight. See ECM wiring diagrams.
  - Throttle linkage for sticking or binding.
  - TPS for sticking or binding, make sure output is stable at idle and adjustment specification is correct.
  - IAC system, use CHART C-2C.
  - Generator output voltage. Repair if less than 9 or more than 16 volts.
  - P/N switch circuit, use CHART C-1A, or use "Scan" Tool.
  - Injector balance, use CHART C-2A.
  - PCV valve for proper operation by placing finger over inlet hole in valve end several times. Valve should snap back. If not, replace valve, refer to Section "C13".
  - Evaporative Emission Control System, use CHART C-3.
  - Throttle body Coking. Incorrect idle speed may be caused by foreign material accumulation in the throttle bore, on the throttle valve or on the throttle shaft. Refer to Section "C2" for throttle body cleaning procedure before checking or adjusting minimum idle speed.
  - EGR valve: There should be no EGR at idle.
- Monitoring block learn values may help identify the cause of the problem. If the system is running lean (block learn greater than 138) refer to Diagnostic Aids on facing page of Code 44. If the system is running rich (block learn values less than 118) refer to Diagnostic Aids on facing page of Code 45.
- Inspect oxygen sensor for silicon contamination from fuel, or use of improper RTV sealant. The sensor will have a white, powdery coating, and will result in a high but false signal voltage (rich exhaust indication). The ECM will then reduce the amount of fuel delivered to the engine, causing a severe driveability problem.
- Run a cylinder compression check, refer to Section "6".
- Check for fuel in pressure regulator hose. If fuel is present, replace regulator assembly.
- Check ignition system wires and plugs.
- Check for loose or damaged MAF duct between sensor and throttle body.
- Disconnect MAF sensor and if condition is corrected, replace sensor. "Scan" tool should read about 4-8 grams per second at idle.
- Clean Injectors.
- If problem exists with A/C "ON", check A/C system operation, use CHART C-10.

CHART B-1

RESTRICTED EXHAUST SYSTEM CHECK

Proper diagnosis for a Restricted Exhaust System is essential before any components are replaced. The following procedure may be used for diagnosis:

CHECK AT O_2 SENSOR:

1. Carefully remove O_2 sensor.
2. Install Exhaust Backpressure Tester (BT 8515 or BT 8603) or equivalent in place of O_2 sensor (see illustration).
3. After completing test described below, be sure to coat threads of O_2 sensor with anti-seize compound P/N 5613695 or equivalent prior to re-installation.

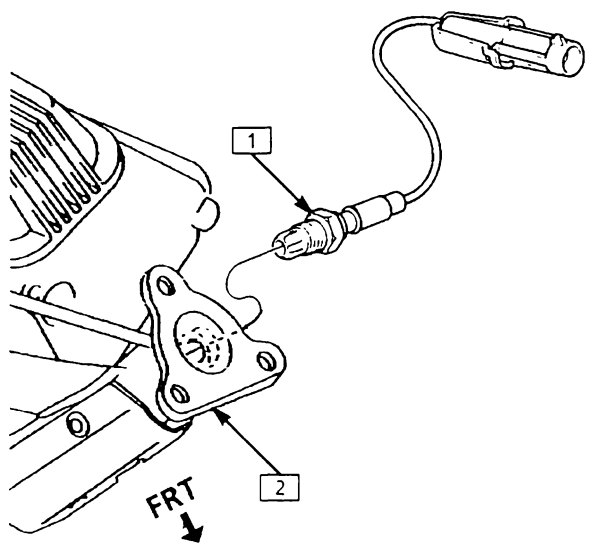

1 OXYGEN SENSOR
2 RT EXHAUST MANIFOLD

9S 5691 6E

DIAGNOSIS:

1. With the engine at normal operating temperature and running at 2500 rpm, observe the exhaust system backpressure reading on the gauge.
2. If the backpressure exceeds 1 1/4 psi (8.62 kPa), a restricted exhaust system is indicated.
3. Inspect the entire exhaust system for a collapsed pipe, heat distress, or possible internal muffler failure.
4. If there are no obvious reasons for the excessive backpressure, a restricted catalytic converter should be suspected, and replaced using current recommended procedures.

SECTION C
COMPONENT SYSTEMS

Section C provides information on the following:

- General description of components and systems.
- On-car service.
- Part names and group numbers.
- Diagnostic charts. These include a functional check of the system as well as diagnosis of any problem found in the functional check.

For locations of components, wiring diagrams, and ECM Terminal End View, refer to the front of the A Section of the engine being diagnosed.

Following are the sub-section identification and the system covered:

- C1 Electronic Control Module (ECM) and Sensors ..... Page C1-1
- C2 Fuel Metering System ..... Page C2-1
- C3 Evaporative Emission Control System (EECS) ..... Page C3-1
- C4 Ignition System / EST (Distributorless C^3I) ..... Page C4-1
- C5 Electronic Spark Control (ESC) System ..... Page C5-1
- C7 Exhaust Gas Recirculation (EGR) System ..... Page C7-1
- C8 Torque Converter Clutch (TCC) System ..... Page C8-1
- C10 A/C Clutch Circuit Diagnosis ..... Page C10-1
- C12 Electric Cooling Fan ..... Page C12-1
- C13 Positive Crankcase Ventilation (PCV) ..... Page C13-1

DIAGNOSTIC CHARTS

The Diagnostic Charts for each system are found after the on-car service and parts information at the back of each section. Following are the charts found in this section.

- Chart C-1A Park/Neutral Switch Diagnosis ..... Page C1-12
- Chart C-2A Injector Balance Test ..... Page C2-14
- Chart C-2C Idle Air Control (IAC) Valve Check ..... Page C2-16
- Chart C-3 Canister Purge Solenoid Check ..... Page C3-4
- Chart C-4A C^3I Misfire At Idle ..... Page C4-8
- Chart C-4B C^3I Misfire Under Load ..... Page C4-10
- Chart C-5 Electronic Spark Control (ESC) System Check ..... Page C5-4
- Chart C-7 Exhaust Gas Recirculation (EGR) Check ..... Page C7-4
- Chart C-8 Torque Converter Clutch (TCC) System ..... Page C8-4
- Chart C-10 A/C Clutch Circuit Diagnosis ..... Page C10-2
- Chart C-12A Cooling Fan Check ..... Page C12-4
- Chart C-12B Cooling Fan Check (Fan "ON" At All Times) ..... Page C12-6
- Chart C-12C Cooling Fan Check (No Secondary Fan) ..... Page C12-8

SECTION C1

ELECTRONIC CONTROL MODULE (ECM) AND SENSORS

CONTENTS

GENERAL DESCRIPTION C1-1
ELECTRONIC CONTROL MODULE (ECM) .. C1-1
PROM C1-2
CALPAK C1-2
ECM Function C1-2
INFORMATION SENSORS C1-2
Coolant Temperature Sensor C1-2
MAF Sensor C1-2
MAT Sensor C1-3
Oxygen (O_2) Sensor C1-3
Throttle Position Sensor C1-3
Knock Sensor C1-4
Vehicle Speed Sensor C1-4
Park/Neutral Switch C1-4
A/C Request Signal C1-4
Crankshaft Sensor C1-4
Camshaft Sensor C1-4
DIAGNOSIS C1-5
ECM C1-5
PROM C1-5
ECM INPUTS C1-6
Coolant Temperature Sensor C1-6
MAF Sensor C1-6
MAT Sensor C1-6
Oxygen (O_2) Sensor C1-6
Throttle Position Sensor (TPS) C1-6
Knock Sensor Signal C1-6
Vehicle Speed Sensor (VSS) C1-6
Park/Neutral Switch C1-6
A/C Request Signal C1-6
Cam Signal C1-6
ON-CAR SERVICE C1-7
ELECTRONIC CONTROL MODULE (ECM) .. C1-7
ECM REPLACEMENT C1-7
PROM C1-7
Functional Check C1-8
CALPAK C1-8
COOLANT TEMPERATURE SENSOR C1-9
MAF SENSOR C1-9
MAT SENSOR C1-10
OXYGEN (O_2) SENSOR C1-10
THROTTLE POSITION SENSOR C1-10
KNOCK SENSOR C1-11
PARK/NEUTRAL SWITCH C1-11
CRANKSHAFT SENSOR C1-11
CAMSHAFT SENSOR C1-11
PARTS INFORMATION C1-11

GENERAL DESCRIPTION

ELECTRONIC CONTROL MODULE (ECM)

The Electronic Control Module (ECM) is the control center of the fuel injection system. It constantly looks at the information from various sensors, and controls the systems that affect vehicle performance. The ECM also performs the diagnostic function check of the system. It can recognize operational problems, alert the driver through the "Service Engine Soon" light, and store a code or codes which identify the problem areas to aid the technician in making repairs. See "Introduction" Section "6E" for more information on using the diagnostic functions of the ECM.

The 3.8L Turbo (Figure C1-1) will use the standard ECM (GMCM) for service. This ECM consists of three parts: a Controller (the ECM without a PROM), a Calibrator called a PROM (Programmable read only memory), and a CALPAK.

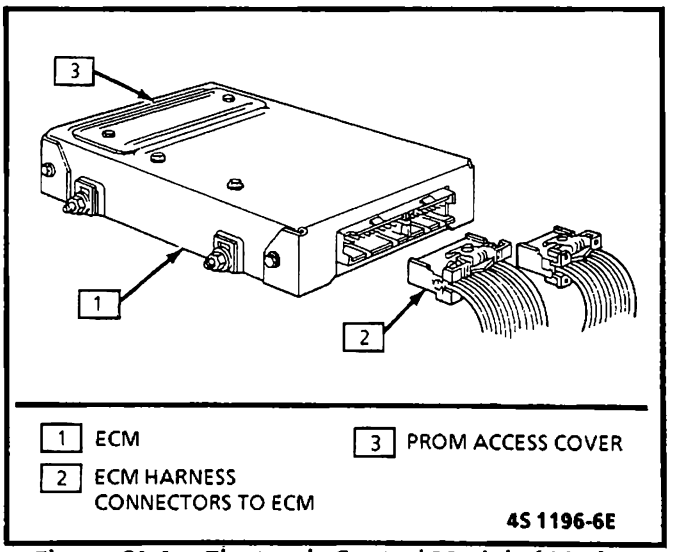

Figure C1-1 - Electronic Control Module (ECM) 3.8L Turbo

PROM

To allow one model of ECM to be used for many different cars, a device called a Calibrator (or PROM) (Programmable Read Only Memory) is used (see Figure C1-2). The PROM is located inside the ECM, and has information on the vehicle's weight, engine, transmission, axle ratio, and other items specific to each vehicle. While one ECM part number can be used by many car lines, a PROM is very specific and must be used for the right car. For this reason, it is very important to check the latest parts book and Service Bulletin information for the correct part number when replacing a PROM.

An ECM used for service (called a controller) comes without a PROM. The PROM from the old ECM must be carefully removed and installed in the new ECM, see On-Car Service for this procedure.

CALPAK

A device called a CALPAK (Figure C1-2) is used to allow fuel delivery if other parts of the ECM are damaged. An access door in the ECM allows removal and replacement of the CALPAK similar to a PROM .

If the CALPAK is missing, a Code 52 will be set.

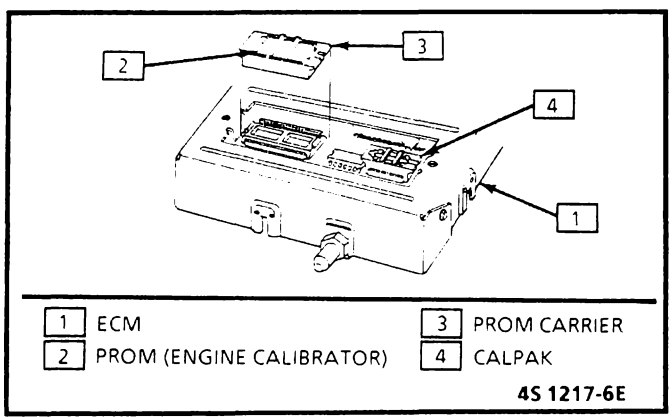

Figure C1-2 - PROM (Calibrator) and CALPAK

ECM Function

The ECM supplies a buffered 5 or 12 volts to power various sensors or switches. This is done through resistances in the ECM which are so high in value that a test light will not light when connected to the circuit. In some cases, even an ordinary shop voltmeter will not give an accurate reading because its resistance is too low. Therefore, the use of a 10 megohm input impedance digital voltmeter is required to assure accurate voltage readings.

The ECM controls output circuits such as the injectors, IAC, cooling fan relay, etc. by controlling the ground circuit through transistors or a device called a quad-driver in the ECM.

INFORMATION SENSORS

Coolant Temperature Sensor (CTS)

The Coolant Temperature Sensor (CTS) is a thermistor (a resistor which changes value based on temperature) mounted in the engine coolant stream. Low coolant temperature produces a high resistance (100,000 ohms at -40°C/-40°F) while high temperature causes low resistance (70 ohms at 130°C/266°F).

The ECM supplies a 5-volt signal to the (CTS) thru a resistor in the ECM and measures the voltage. The voltage will be high when the engine is cold, and low when the engine is hot. By measuring the voltage, the ECM can determine the engine coolant temperature. Engine coolant temperature affects most systems the ECM controls.

A failure in the (CTS) circuit should set either a Code 14 or Code 15. Remember, these codes indicate a failure in the coolant temperature sensor circuit, proper use of the chart will lead to either repairing a wiring problem or replacing the sensor, to properly repair a problem.

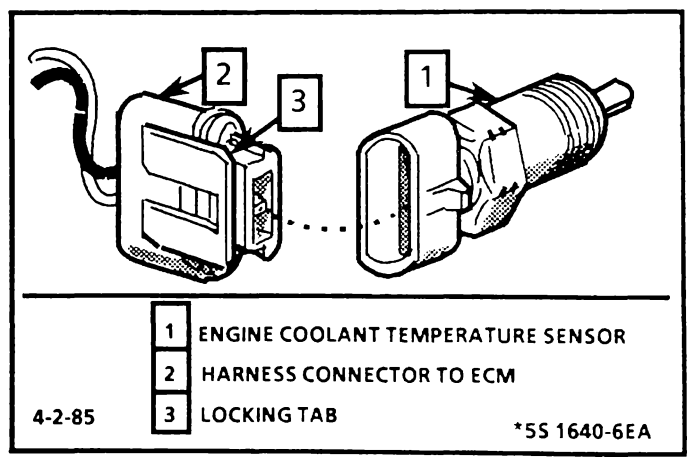

Figure C1-3 - Engine Coolant Temperature Sensor

Mass Air Flow (MAF) Sensor

The Mass Air Flow (MAF) sensor (Figure C1-4) measures the amount of air which passes through it. The ECM uses this information to determine the operating condition of the engine, to control fuel delivery. A large quantity of air indicates high engine load, while a small quantity indicates low engine load.

This sensor produces a frequency output which the ECM converts to air flow in grams per second. A "Scan" tool will display this information with a range from 3 gm/sec to 150 gm/sec.

If the sensor fails at a high frequency a Code 33 should set, and, if it fails at a low frequency, or power is lost to the sensor a Code 34 should set. A Code 44 or 45 may also be set due to a faulty MAF sensor and the code chart will explain how to determine if the MAF sensor is the cause of the lean or rich condition.

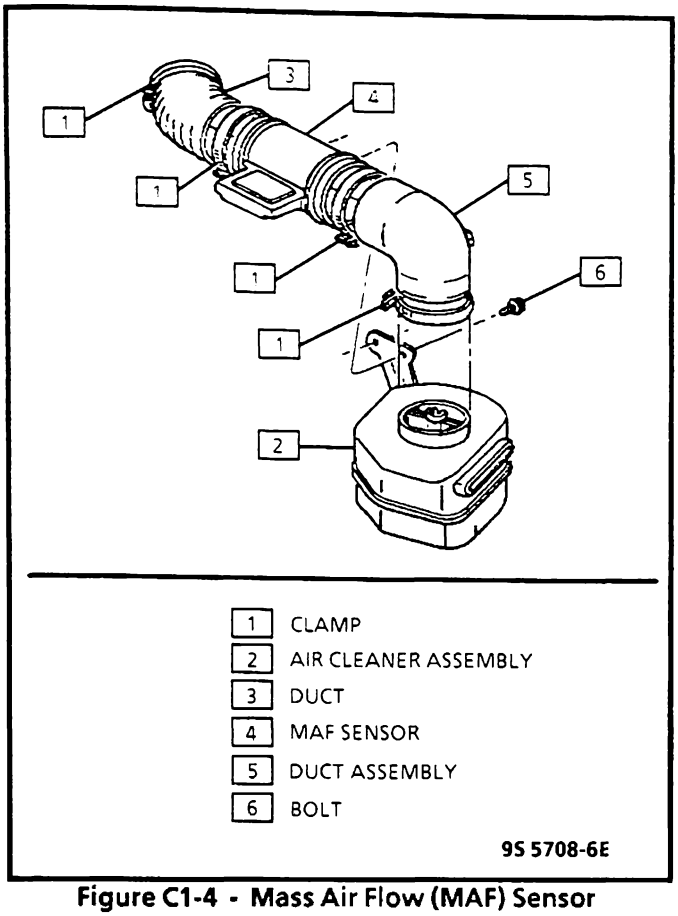

Figure C1-4 - Mass Air Flow (MAF) Sensor

Manifold Air Temperature (MAT) Sensor

The Manifold Air Temperature (MAT) Sensor is a thermistor, a resistor, which changes value based on the temperature of air entering the engine. Low temperature produces a high resistance (100,000 ohms at -40°C/-40°F), while high temperature causes low resistance (70 ohms at 130°C/266°F).The ECM supplies a 5 volt signal to the MAT sensor through a resistor in the ECM and measures the voltage. The voltage will be high when the incoming air is cold, and low when the intake air is hot. By measuring the voltage, the ECM can calculate the incoming air temperature, and uses this signal to compensate the MAF Sensor signal based on temperature.

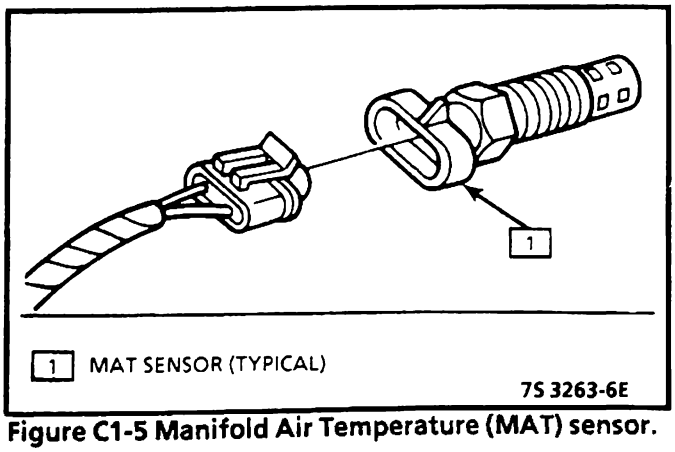

Figure C1-5 Manifold Air Temperature (MAT) sensor.

The MAT sensor is also used to control spark timing.

A failure in the MAT sensor circuit should set either a Code 23 or Code 25.

Oxygen (O_2) Sensor (Figure C1-5)

The oxygen (O_2) sensor is mounted in the exhaust system where it can monitor the oxygen content of the exhaust gas stream. The oxygen content in the exhaust reacts with the oxygen (O_2) sensor to produce voltage output. This voltage ranges from approximately .1 volt (high O_2 - lean mixture) to .9 volts (low O_2 - rich mixture). This voltage can be measured with a digital voltmeter having at least 10 meg ohms input impedance. Use of standard shop type voltmeters will result in very inaccurate readings.

By monitoring the voltage output of the oxygen O_2 sensor, the ECM will calculate the fuel mixture command to the injector (lean mixture-low O_2 voltage = rich command, rich mixture-high O_2 voltage = lean command).

An open oxygen (O_2) sensor should set a Code 13. A constant low voltage in the sensor circuit should set a Code 44. A constant high voltage in the circuit should set a Code 45. Codes 44 and 45 are usually the result of fuel system problems. See Code Charts for conditions that can cause a lean or rich system.

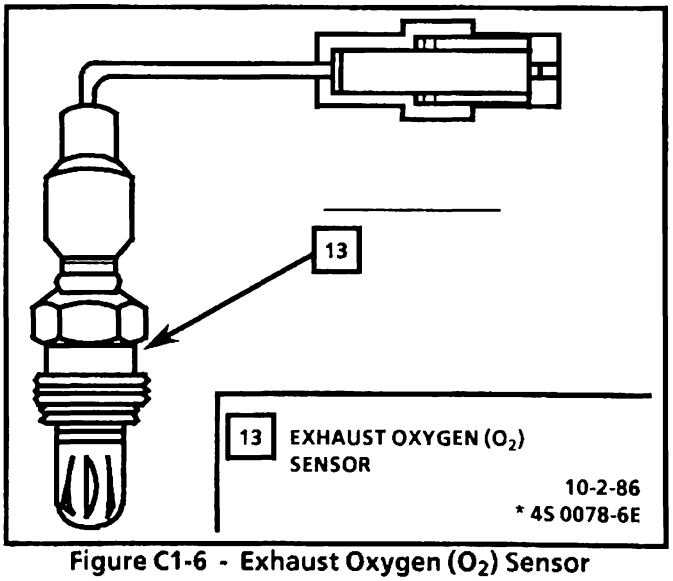

Figure C1-6 - Exhaust Oxygen (O_2) Sensor

Throttle Position Sensor (TPS)

The Throttle Position Sensor (TPS) is a potentiometer connected to the throttle shaft on the throttle body. The TPS has one end of the potentiometer connected to 5 volts from the ECM and the other to ECM ground. A third wire is connected to the ECM (signal wire) to measure the voltage from the TPS. By monitoring the voltage on this signal line the

ECM calculates throttle position. As the throttle valve angle is changed (accelerator pedal moved), the voltage output of the TPS also changes. At a closed throttle position, the voltage output of the TPS is low (approximately .5 volt). As the throttle valve opens, the output increases so that, at wide-open throttle, the output voltage should be approximately 5 volts.

By monitoring the output from the TPS, the ECM can determine fuel delivery based on throttle valve angle (driver demand). If the TPS circuit is open, the ECM will set a trouble Code 22. If the TPS circuit is shorted, the ECM will think the vehicle is at WOT, and a trouble Code 21 will be set. A broken or loose TPS can cause intermittent bursts of fuel from the injector, an unstable idle, because the ECM thinks the throttle is moving. A problem in any of the TPS circuits should set either a Code 21 or 22. Once a Trouble Code is set, the ECM will use an artificial default value for TPS, and some vehicle performance will return. A high idle will result when either Code 21 or 22 is set.

See On-Car Service for replacement or adjustment of TPS.

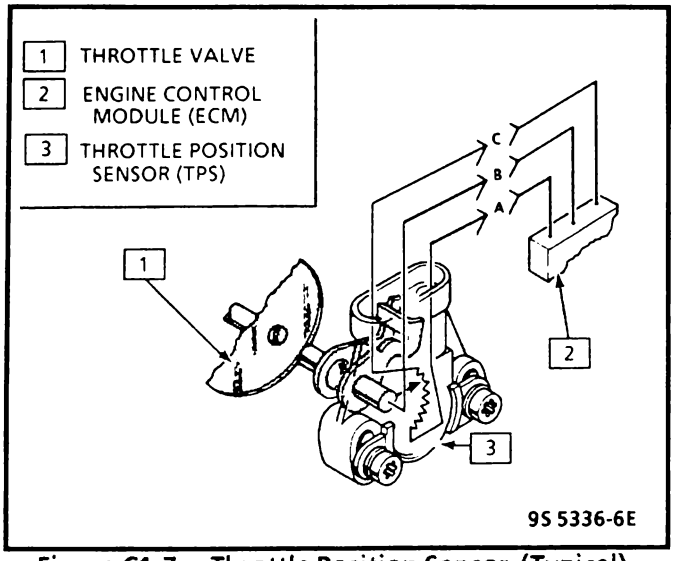

Figure C1-7 - Throttle Position Sensor (Typical)

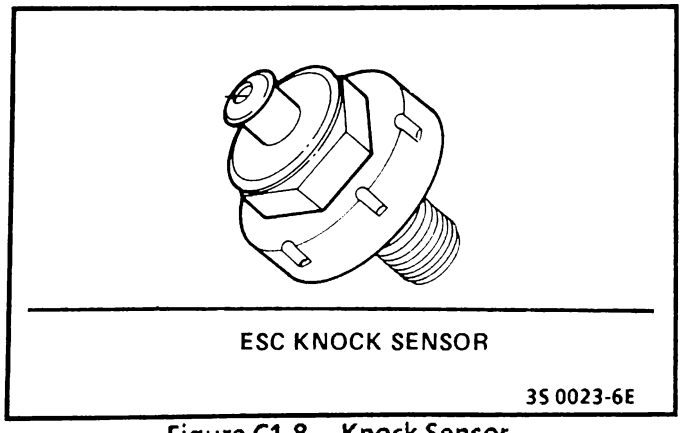

Figure C1-8 - Knock Sensor

Knock Sensor

The knock sensor is mounted in the engine block. When abnormal engine vibrations (spark knock) are present, the sensor produces a voltage signal, which is sent to the ESC module.

Refer to Section "C5" for further information on the Electronic Spark Control (ESC) system.

Vehicle Speed Sensor

The Vehicle Speed Sensor (VSS), sends a pulsing voltage signal to the ECM, which the ECM converts to miles per hour. This sensor mainly controls the operation of the TCC system. See Section "C8" (TCC), Code 24 or Section "8A" for more information.

Park/Neutral Switch

The Park/Neutral (P/N) switch indicates to the ECM when the transmission is in Park or Neutral or Drive. This information is used for the TCC, EGR, and the IAC valve operation.

Important

Vehicle should not be driven with Park/Neutral switch disconnected, as idle quality will be affected and a possible false Code 24 (VSS).

See Section "8A" for more information on the P/N switch, which is part of the neutral/start and backup light switch assembly. See Chart C-1A for P/N switch check.

A/C Request Signal

This signal tells the ECM that the A/C selector switch is turned on, and that the A/C pressure switches are closed. The ECM uses this to adjust the idle speed only when the air conditioning is operational.

See Section "C10" for A/C wiring diagrams and diagnosis of A/C electrical system.

Crankshaft Sensor

The Crankshaft Sensor provides a signal, through the Ignition Module, which the ECM uses as reference to calculate rpm and crankshaft position. See Ignition System, Section "C4", for further information.

Camshaft Sensor

The Cam Sensor sends a signal to the ECM, which uses it as a "sync pulse" to trigger the injectors in proper sequence.

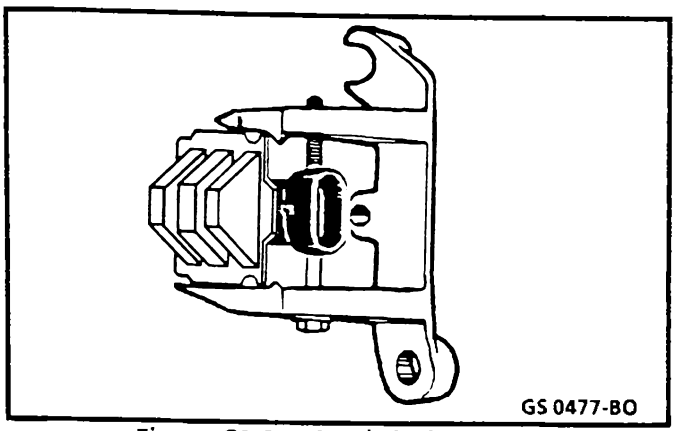

Figure C1-9 - Crankshaft Sensor

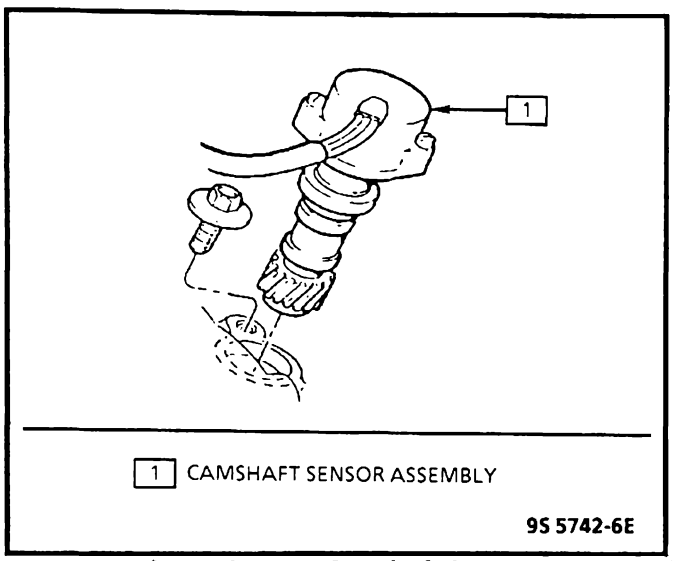

Figure C1-10 - Camshaft Sensor

DIAGNOSIS

To read the codes, use a "Scan" tool, or ground the diagnostic "test" terminal with the engine not running and the ignition "ON". The "Service Engine Soon" light will flash Code 12 three times and then flash each code stored in memory three times. All codes stored in memory would have been read when Code 12 was flashed again. No new codes can be stored when in the Diagnostics Mode (diagnostics lead grounded). This eliminates confusion while the system is being worked on.

To clear the codes from memory:

- Ignition "OFF"
- Disconnect battery pigtail, located near the battery, for 30 seconds.

Since the ECM can have a failure which may affect only one circuit, following the diagnostic procedures in this section will determine which circuit has a problem and where it is.

If a diagnostic chart indicates that the ECM connections or ECM is the cause of a problem, and the ECM is replaced, but does not correct the problem, one of the following may be the reason:

- There is a problem with the ECM terminal connections. - The diagnostic chart will say "ECM connections or ECM". The terminals may have to be removed from the connector in order to check them properly.
- The ECM, PROM is not correct for the application. - The incorrect components may cause a malfunction and may or may not set a code.
- The problem is intermittent. - This means that the problem is not present at the time the system is being checked. In this case, refer to the "Symptoms" portion of the manual and make a careful visual/physical inspection of all portions of the system involved.
- Shorted solenoid, relay coil, or harness. - Solenoids and relays are turned "ON" and "OFF" by the ECM, using internal electronic switches called "Drivers". Each driver is part of a group of four called "Quad-drivers".

A shorted solenoid, relay coil, or harness will not damage the ECM, but will cause the circuit and controlled component to be inoperative. When the circuit fault is not present or has been repaired, the "Quad-Driver" will again operate in a normal manner due to it's fault protected design. If a fault has been repaired in a circuit controlled by a "Quad-Driver", the original ECM should be reinstalled and the circuit checked for proper operation. ECM replacement will not be necessary if the repaired circuit or component now operates correctly.

J34636 or BT 8405 testers, or equivalent, provide a fast, accurate means of checking for a shorted coil or a short to battery voltage.

- The PROM may be faulty. - Although these rarely fail, it operates as part of the ECM. Therefore, it could be the cause of the problem. Substitute a known good PROM.
- The replacement ECM may be faulty. - After the ECM is replaced, the system should be rechecked for proper operation. If the diagnostic chart again indicates the ECM is the problem, substitute a known good ECM. Although this is a rare condition, it could happen.

ECM

A faulty ECM will be determined in the diagnostic charts or by a Code 55.

PROM

An incorrect or faulty PROM, which is part of the ECM, may set a Code 51.

ECM INPUTS

All of the sensors and input switches can be diagnosed by the use of a "Scan" tool. Following is a short description of how the sensors and switches can be diagnosed by the use of a "Scan" tool. The "Scan" tool can also be used to compare the values for a normal running engine with the engine you're diagnosing.

Coolant Temperature Sensor (CTS)

A "Scan" tool displays engine coolant temperature in degrees Centigrade and Farenhiet. After engine is started, the temperature should rise steadily to about 90°C (194°F) then stabilize when thermostat opens. If the engine has not been run for several hours (overnight) the CTS and MAT temperature readings should be close to each other. A failure in the CTS or circuit should set a Code 14 or 15. The code charts also contain a chart to check for sensor resistance values relative to temperature.

Mass Air Flow (MAF) Sensor

A "Scan" tool reads the MAF value and displays it in grams per second and should read between 4-7 on a fully warmed up idling engine. Values should change rather quickly on acceleration, but values should remain fairly stable at any given rpm. Most "Scan" tools will have 2 positions for reading MAF sensor values, and will read default value when a code sets. A failure in the MAF sensor or circuit should set a Code 33 or 34.

Manifold Air Temperature (MAT) Sensor

A "Scan" tool displays temperature of the air entering the engine and should read close to ambient air temperature when engine is cold, and rise as underhood temperature increases. If the engine has not been run for several hours (overnight) the MAT sensor temperature and CTS should read close to each other. A failure in the MAT sensor or circuit should set a Code 23 or 25. The code charts also contain a chart to check for sensor resistance values relative to temperature.

Oxygen O_2 Sensor

The "Scan" tool has several positions that will indicate the state of the exhaust gases, oxygen sensor voltage, integrator, and block learn. See "Scan" tool position information in "Introduction," Section "6E".

A problem in the oxygen sensor circuit, or fuel system, should set a Code 13 (open circuit), Code 44 (lean indication), Code 45 (rich indication). Refer to applicable chart if any of these codes were stored in memory.

Throttle Position Sensor (TPS)

A "Scan" tool displays throttle position in volts. The value should read .40 volt ± .05 volt (.35-.45 volt), with throttle closed and ignition "ON", or at idle. Voltage should increase at a steady rate as throttle is moved toward WOT (about 4-6 volts.)

The ECM has the ability to Auto-Zero the TPS voltage if it is within the values specified above. This means that any voltage less than .45 volt will be determined by the ECM to be 0% throttle. Some "Scan" tools have the ability to read the throttle angle and should read 0% when the throttle is closed. A failure in the TPS or circuit should set a Code 21 or 22.

Knock Sensor Signal

A "Scan" tool will indicate when the ESC module signals the ECM that knock is present. See Section "C5" for further information on the ESC system

Vehicle Speed Sensor (VSS)

A "Scan" tools reading should closely match with speedometer reading with drive wheels turning. A failure in the VSS circuit should set a Code 24.

Park/Neutral Switch

A "Scan" tool should read "P/N" when in Park, or Neutral, and "R.D.L." when in Drive or Overdrive. This reading may vary with different makes of "Scan" tools. Refer to CHART C-1A for Park/Neutral switch diagnosis.

A/C Request Signal

"Scan" tool should indicate A/C "ON", when A/C is requested and the pressure cyling switch is closed.

See Section "C10" for electrical system diagnosis.

Cam Signal

The ECM uses Cam Signal to determine the position of the #1 piston on it's compression stroke. This signal is used by the ECM to calculate the sequential fuel injection (SFI) mode of operation. A loss of this signal will set a Code 41. If the Cam signal is lost while the engine is running the fuel injection system will shift to the simultaneous injection mode of operation, and the engine will continue to run. The engine can be restarted but will continue to run in the simultaneous mode as long as the fault is present.

ON-CAR SERVICE

ELECTRONIC CONTROL MODULE (ECM)

Service of the ECM should normally consist of either replacement of the ECM or a PROM change.

If the diagnostic procedures call for the ECM to be replaced, the engine "calibrator" (PROM) and ECM should be checked first to see if they are the correct parts. If they are, remove the PROM from the faulty ECM and install it in the new service ECM. THE SERVICE ECM WILL NOT CONTAIN A PROM. Trouble Code 51 indicates the PROM is installed improperly or has malfunctioned. When Code 51 is obtained, check the ECM installation for bent pins or pins not fully seated in the socket. If it is installed correctly and Code 51 still shows, replace the PROM.

Important

When replacing the production ECM with a service ECM (controller), it is important to transfer the Broadcast Code and production ECM number to the service ECM label. Please do not record on ECM cover. This will allow positive identification of ECM parts throughout the service life of the vehicle.

Important

To prevent internal ECM damage, the ignition must be "OFF" when disconnecting or reconnecting power to ECM (for example, battery cable, ECM pigtail, ECM fuse, jumper cables, etc.).

ECM REPLACEMENT

NOTICE: To prevent possible Electrostatic Discharge damage to the ECM, Do Not touch the connector pins or soldered components on the circuit board.

NOTICE: To prevent possible Electrostatic Discharge damage to the PROM, CAL-PAK or MEM-CAL, Do Not touch the component leads, and Do Not remove integrated circuit from carrier.

Remove or Disconnect

1. Negative battery cable.
2. Right hand hush panel.
3. Connectors to ECM.
4. ECM.
5. PROM from ECM. See PROM procedure.
6. New ECM from its packaging and check the service number to make sure it is the same as the defective ECM.

Important

Replacement ECM is supplied without a PROM, so care should be used, when removing it from the defective ECM, because it will be reused in the new ECM.

Install or Connect

1. Old PROM in new service ECM.
2. ECM into vehicle.
3. Connectors to ECM.
4. Right hand hush panel.
5. Negative battery cable.

PROM

Code 51 indicates a faulty PROM, bent pins, or incorrect installation.

Important

It is possible to install a PROM backward. If the PROM is installed backward and the ignition key turned to "ON", the PROM circuitry will be destroyed, requiring PROM replacement.

THE IGNITION SHOULD ALWAYS BE "OFF" WHEN INSTALLING OR REMOVING THE ECM CONNECTORS.

NOTICE: To prevent possible Electrostatic Discharge damage to the PROM, CAL-PAK or MEM-CAL, Do Not touch the component leads, and Do Not remove integrated circuit from carrier.

Remove or Disconnect

1. Connectors from ECM.
2. ECM mounting hardware.
3. ECM from passenger compartment.
4. ECM access cover (see Figure C1-11).
5. PROM assembly. (Figure C1-12)

Important

Using the rocker-type PROM removal tool, engage one end of the PROM carrier with the hook end of the tool (see Figure C1-12). Press on the vertical bar end of the tool and rock the engaged end of the PROM carrier up as far as possible.

Engage the opposite end of the PROM carrier in the same manner and rock this end up as far as possible. Repeat this process until the PROM carrier and PROM are free of the PROM socket. The PROM

carrier, with PROM in it, should lift off of the PROM socket easily. PROM carrier should only be removed by using the pictured PROM removal tool. Other methods could cause damage to the PROM or PROM socket.

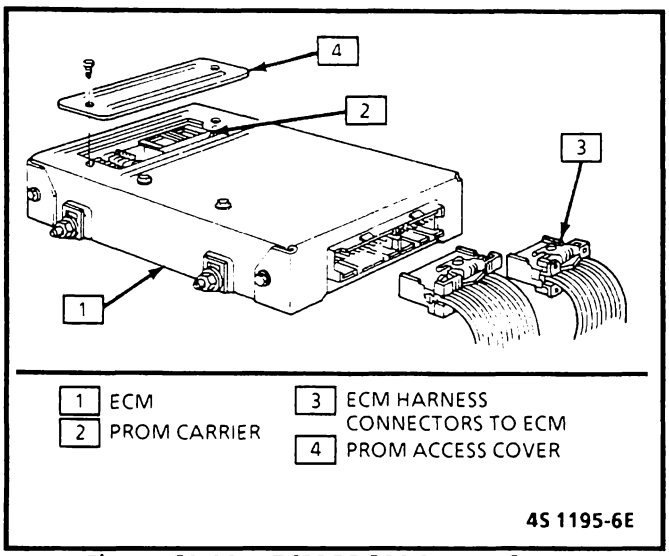

Figure C1-11 - ECM PROM Access Cover

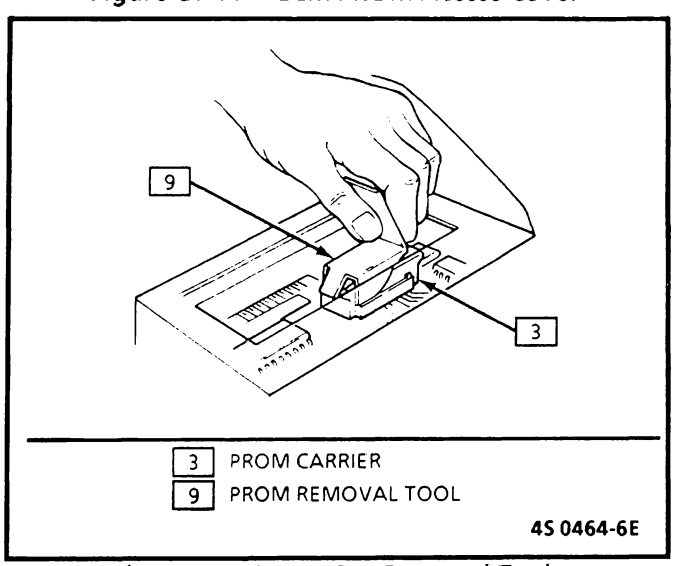

Figure C1-12 - PROM Removal Tool

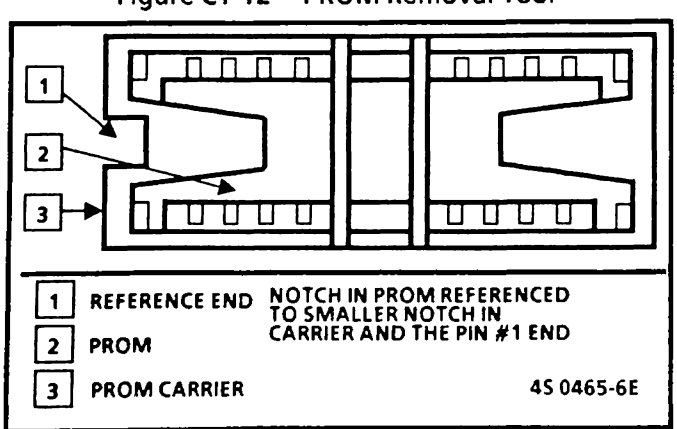

Figure C1-13 - PROM in PROM Carrier

Inspect

1. New PROM for same part number as old.

Important

Do Not remove PROM from carrier to check PROM number.

2. For correct reference of PROM in carrier, see Figure C1-13.

Install or Connect

1. New PROM carrier in PROM socket.

Important

Small notch of carrier should be aligned with small notch in socket. Press on PROM carrier until it is firmly seated in the socket. Do not press on PROM; only the carrier.

2. Access cover on ECM.
3. ECM in passenger compartment.
4. Connectors to ECM.

Functional Check

1. Turn ignition "ON".
2. Enter diagnostics.
   A. Allow Code 12 to flash four times to verify no other codes are present. This indicates the PROM is installed properly and the ECM is functioning.
   B. If trouble Code 51 occurs, or if the "Service Engine Soon" light is on constantly with no codes, the PROM is not fully seated or is defective.
      - If not fully seated, press firmly on the ends of the PROM carrier.
      - If it is necessary to remove the PROM, follow the previous removal instructions.

Important

Any time the PROM is isntalled backward and the ignition switch turned "ON", the PROM is destroyed.

CALPAK see Figure C1-14

NOTICE: To prevent possible Electrostatic Discharge damage to the PROM, CAL-PAK or MEM-CAL, Do Not touch the component leads, and Do Not remove intergrated circuit from carrier.

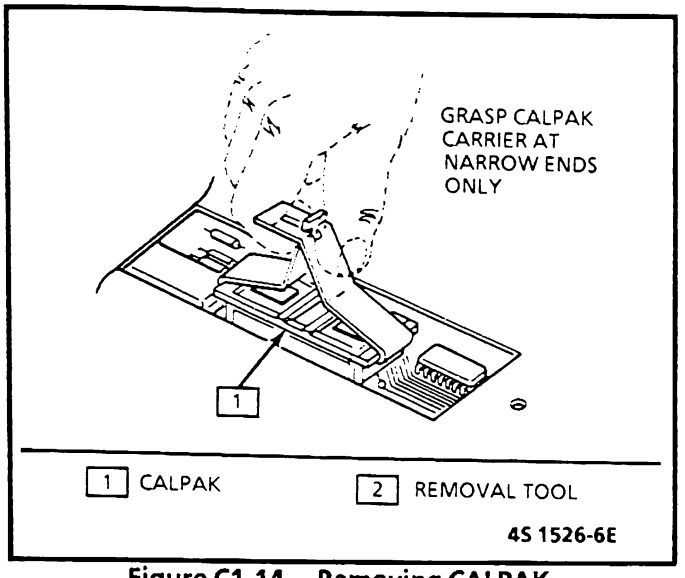

Figure C1-14 - Removing CALPAK

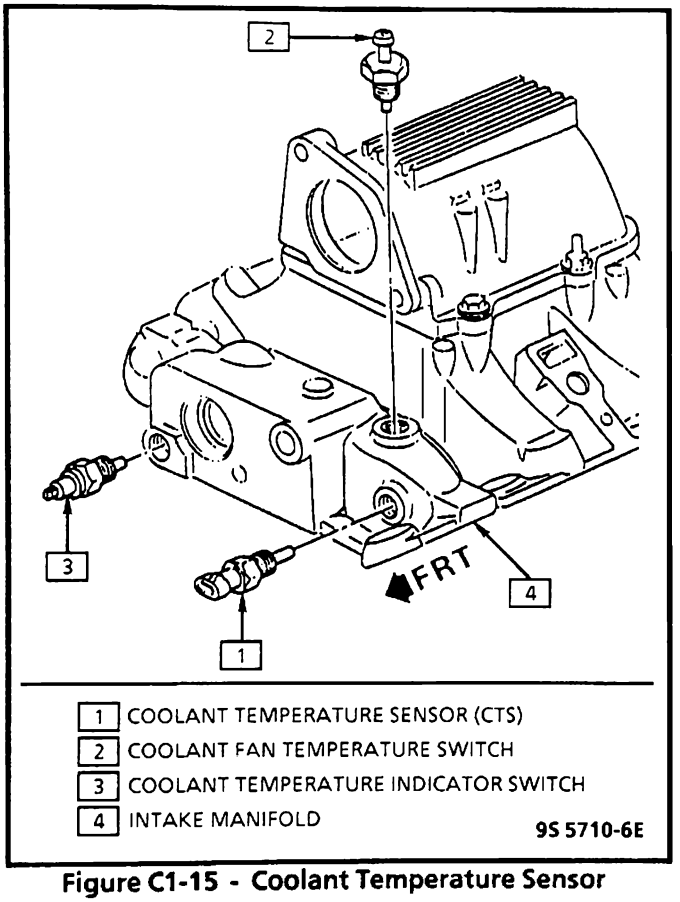

Figure C1-15 - Coolant Temperature Sensor

COOLANT TEMPERATURE (CTS) SENSOR

Important

Care must be taken when handling coolant sensor. Damage to coolant temperature sensor will affect proper operation of the Fuel Injection system.

Remove or Disconnect

1. Relieve coolant pressure
2. Negative battery cable.
3. Electrical connector
4. Carefully back out coolant temperature sensor.

Install or Connect

1. Coat threads (only) with sealer P/N 1052080 or equivalent.

Tighten

- Coolant temperature sensor in engine to 30 N·M (22 lbs. Ft).

2. Electrical connector.
3. Negative battery cable.
4. Refill lost coolant.

MASS AIR FLOW (MAF) SENSOR

Replacement of the MAF sensor is shown in Figure C1-16.

Remove or Disconnect

1. Negative battery cable.
2. Electrical connector.
3. Clamps.
4. Sensor.

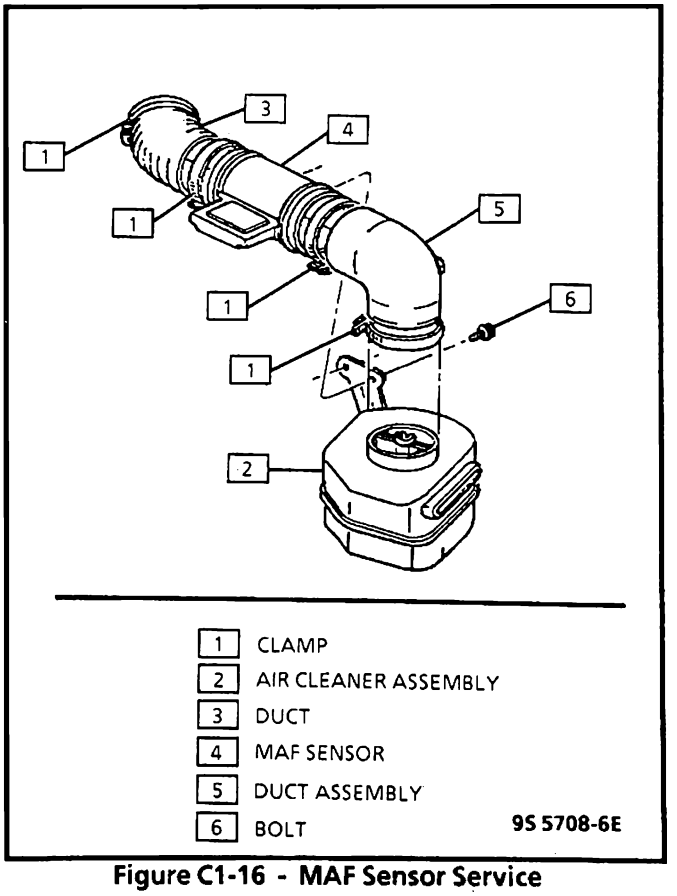

Figure C1-16 - MAF Sensor Service

Install or Connect

1. Sensor.
2. Clamps.
3. Electrical connector.
4. Negative battery cable.

MANIFOLD AIR TEMPERATURE (MAT) SENSOR

Remove or Disconnect

1. Negative battery cable.
2. Electrical connector.
3. Carefully back out sensor.

Install or Connect

1. Coat threads only with sealant, P/N 1052080 or equivalent.
2. Sensor in engine.
3. Electrical connector.
4. Negative battery cable.

OXYGEN SENSOR

NOTICE: The oxygen sensor uses a permanently attached pigtail and connector. This pigtail should not be removed from the oxygen sensor. Damage or removal of the pigtail or connector could affect proper operation of the oxygen sensor.

Important

Take care when handling the oxygen sensor. The in-line electrical connector and louvered end must be kept free of grease, dirt or other contaminants. Also, avoid using cleaning solvents of any type. Do not drop or roughly handle the oxygen sensor.

Remove or Disconnect

The oxygen sensor may be difficult to remove when engine temperature is below 48°C (120°F).

Excessive force may damage threads in exhaust pipe.

1. Negative battery cable.
2. Electrical connector.
3. Carefully back out oxygen sensor.

Install or Connect

Important

A special anti-seize compound is used on the oxygen sensor threads. The compound consists of a liquid graphite and glass beads. The graphite will burn away, but the glass beads will remain, making the sensor easier to remove.

New or service sensors will already have the compound applied to the threads. If a sensor is removed from an engine, and, if for any reason it is to be reinstalled, the threads must have anti-seize compound applied before reinstallation.

1. Coat threads of oxygen sensor with anti-seize compound P/N 5613695, or equivalent if necessary.

Tighten

- Oxygen sensor in exhaust pipe to 41 N·m (30 ft. lbs.).

2. Electrical connector.
3. Negative battery cable.

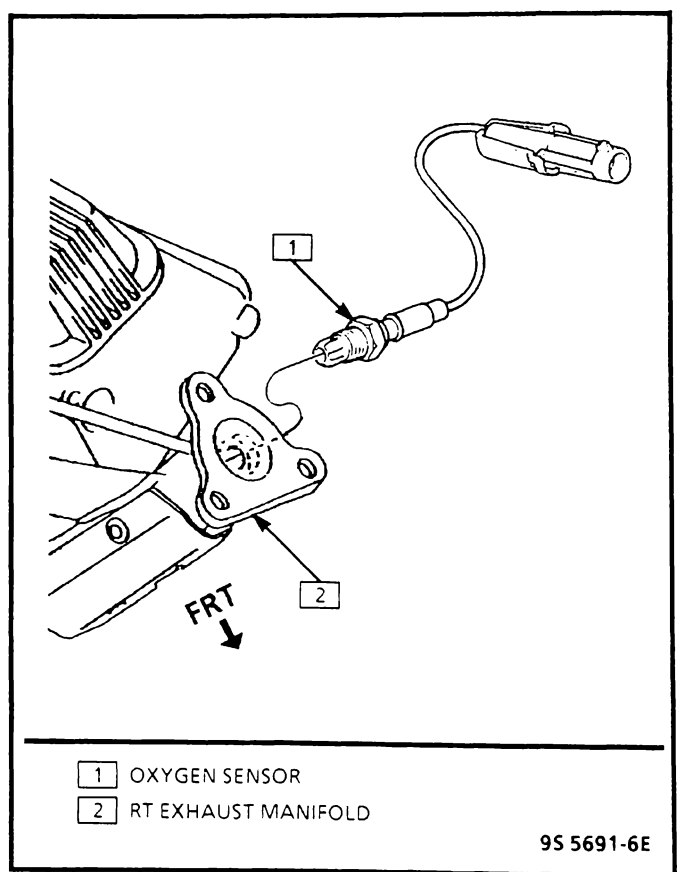

Figure C1-17 - Oxygen Sensor

THROTTLE POSITION SENSOR (TPS)

Remove or Disconnect

1. Electrical connector
2. Two TPS attaching screws and retainers
3. Throttle position sensor.

Install or Connect

1. With throttle valve in the normal closed idle position, install throttle position sensor on throttle body assembly, making sure TPS pickup lever is located ABOVE tang on throttle actuator lever.

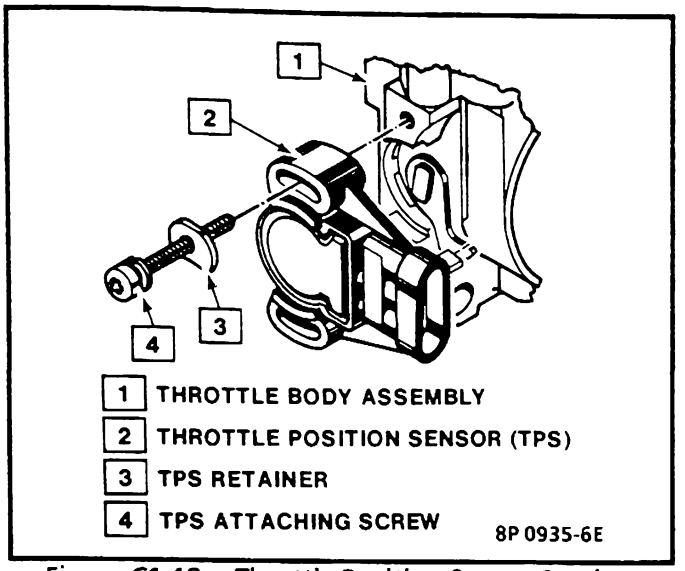

Figure C1-18 - Throttle Position Sensor Service

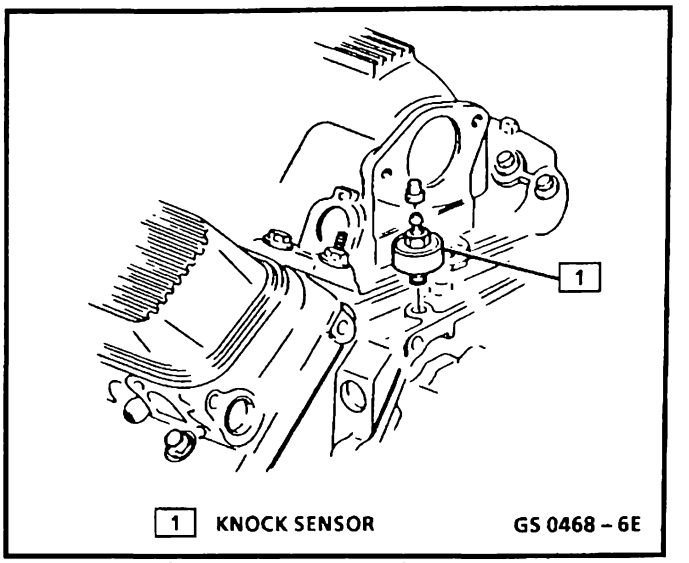

Figure C1-19 - Knock Sensor

2. Retainers and two TPS screws using a thread locking compound on the screws, Loctite 262, GM Part No. 1052624, or equivalent should be used.

Adjust

1. Install three jumper wires between TPS and harness connector or use a "Scan" tool.
2. With ignition "ON", use a digital voltmeter connected to terminals "B" and "C" and adjust TPS to obtain .40 volt ± .05 volt.

Tighten

- TPS attaching screws to 20 N·m (18 in. lb.) then recheck reading to insure adjustment has not changed.

3. With ignition "OFF", remove jumper wires and connect harness to TPS.

ESC KNOCK SENSOR

Remove or Disconnect

1. Negative battery cable.
2. C_3I module and coil assembly and bracket.
3. ESC wiring harness connector from sensor.
4. Sensor from engine block.

Install or Connect

1. Sensor into engine block.

NOTICE: Do Not apply thread sealant to sensor threads. Sensor is coated at factory and applying additional sealant will affect the sensors ability to detect detonation.

Tighten

- Knock sensor to 19 N·m (14 lbs. ft.)

2. Wiring harness connector to the sensor.
3. C_3I module and coil assembly and bracket.
4. Negative battery cable.

PARK/NEUTRAL SWITCH

See Section "8A" for park/neutral switch. On-Car Service and adjustment procedures are also listed there.

CRANKSHAFT SENSOR CAMSHAFT SENSOR

See Section "6E3-C4" for crankshaft and camshaft sensors. On-Car Service and adjustment procedures are also listed there.

PARTS INFORMATION

PART NAME	GROUP
Controller, ECM	3.670
Memory Calibration Unit, PROM	3.670
Sensor, Camshaft Position	2.381
Sensor, Crankshaft Position	2.383
Sensor, Coolant Temp	3.682
Sensor, Exhaust Oxygen	3.682
Sensor, Mass Air Flow (MAF)	3.682
Sensor, Throttle Position: Part of Sensor Kit, Throttle Position	3.440
Sensor, Manifold Air Temp (MAT)	3.682
Sensor, Vehicle Speed	3.682

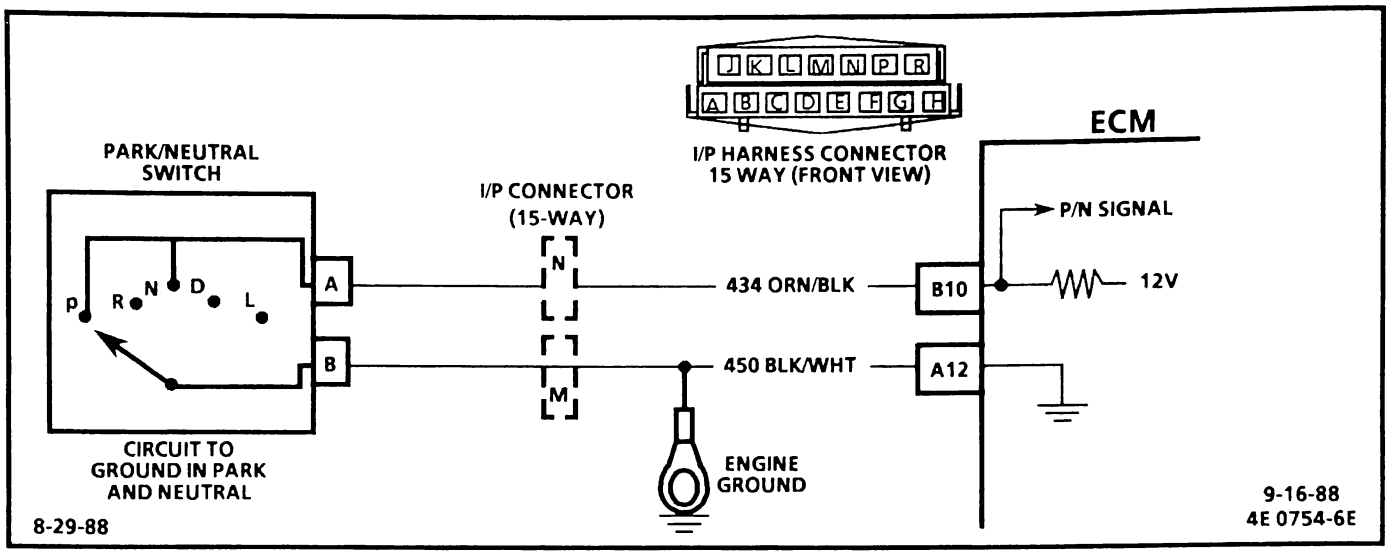

CHART C-1A

PARK/NEUTRAL SWITCH DIAGNOSIS
3.8L TURBO "F" CARLINE (PORT)

Circuit Description:

The park/neutral switch contacts are a part of the neutral start switch and are closed to ground in park or neutral, and open in drive ranges.

The ECM supplies ignition voltage through a current limiting resistor to CKT 434 and senses a closed switch when the voltage on CKT 434 drops to less than one volt.

The ECM uses the P/N signal as one of the inputs to control:

Idle Air Control
VSS Diagnostics
EGR

If CKT 434 indicates P/N (grounded), while in drive range, the EGR would be inoperative, resulting in possible detonation.

If CKT 434 indicates drive (open) a drop in the idle speed may exist when the gear selector is moved into drive range.

Test Description: Numbers below refer to circled numbers on the diagnostic chart.

1. Checks for a closed switch to ground in park position. Different makes of "Scan" tools will read P/N differently. Refer to tool "Operator's Manual" for type of display used for a specific tool.
2. Checks for an open switch in drive range.
3. Make sure "Scan" indicates drive, even while wiggling shifter, to test for an intermittent or misadjusted switch in drive or overdrive range.

CHART C-1A

PARK/NEUTRAL SWITCH DIAGNOSIS 3.8L TURBO "F" CARLINE (PORT)

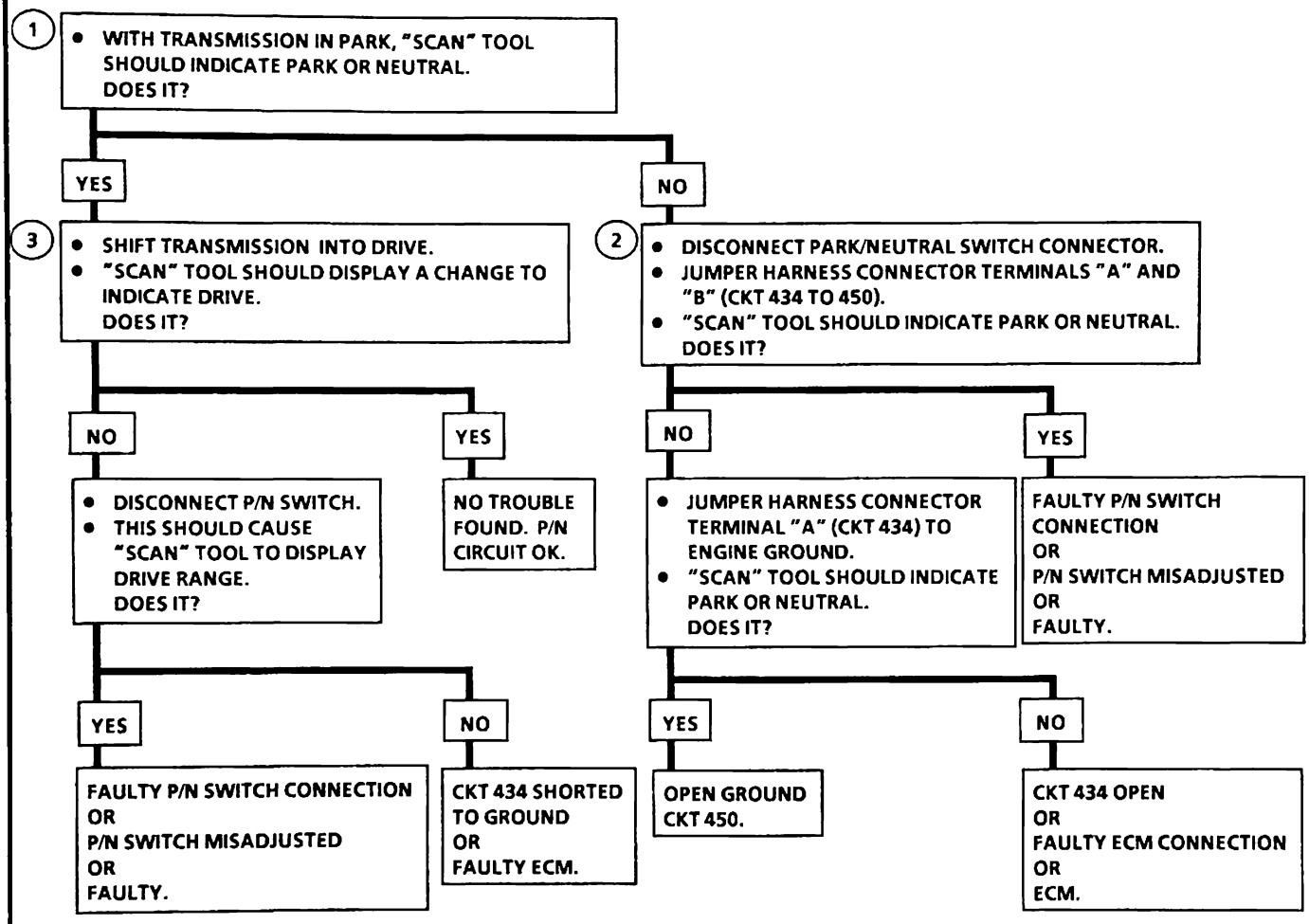

9-16-88
7E 3161-6E

SECTION C2
FUEL METERING SYSTEM
CONTENTS

GENERAL DESCRIPTION C2-1
PURPOSE C2-1
MODES OF OPERATION C2-1
Starting Mode C2-1
Clear Flood Mode C2-2
Run Mode C2-2
Acceleration Mode C2-2
Deceleration Mode C2-2
Battery Voltage Correction Mode C2-2
Fuel Cutoff Mode C2-2
FUEL METERING SYSTEM COMPONENTS ... C2-2
FUEL SUPPLY COMPONENTS C2-3
FUEL PUMP ELECTRICAL CIRCUIT C2-3
FUEL RAIL ASSEMBLY C2-3
Fuel Injectors C2-3
Pressure Regulator Assembly C2-3
THROTTLE BODY ASSEMBLY C2-4
Idle Air Control (IAC) Valve C2-4
Throttle Position Sensor (TPS) C2-5
DIAGNOSIS C2-5
FUEL METERING SYSTEM C2-5
FUEL SYSTEM PRESSURE TEST C2-5
IDLE AIR CONTROL (IAC) VALVE C2-5
ON-CAR SERVICE C2-6
FUEL PUMP RELAY C2-6
OIL PRESSURE SENSOR/SWITCH C2-6
PORT FUEL INJECTION CONPONENTS C2-6
FUEL PRESSURE RELIEF PROCEDURE C2-6
FUEL RAIL ASSEMBLY C2-6
FUEL INJECTORS C2-7
PRESSURE REGULATOR ASSEMBLY C2-8
THROTTLE BODY ASSEMBLY C2-8
THROTTLE POSITION SENSOR (TPS) C2-9
IDLE AIR CONTROL (IAC) VALVE C2-10
IDLE AIR CONTROL HOUSING C2-10
VACUUM TUBE MODULE C2-11
THROTTLE BODY REPLACEMENT C2-11
PARTS INFORMATION C2-12
TORQUE SPECIFICATIONS C2-12

GENERAL DESCRIPTION

PURPOSE

The basic function of the fuel metering system is to deliver the correct amount of fuel to the engine under all operating conditions.

Fuel is delivered to the engine by individual fuel injectors mounted in the intake manifold near each cylinder.

The main control sensor is the oxygen (O_2) sensor, which is located in the exhaust manifold. The O_2 sensor tells the Electronic Control Module (ECM) how much oxygen is in the exhaust gas. The ECM changes the Air/Fuel ratio to the engine by controlling the fuel injectors. The best mixture to minimize exhaust emissions is 14.7 to 1, which allows the catalytic converter to operate the most efficiently. Because of the constant measuring and adjusting of the air/fuel ratio, the fuel injection system is called a "Closed Loop" System (shown in Figure C2-1).

MODES OF OPERATION

The ECM looks at voltages from several sensors to determine how much fuel to give the engine. The fuel is delivered under one of several conditions, called "modes". All the modes are controlled by the ECM, and are described below.

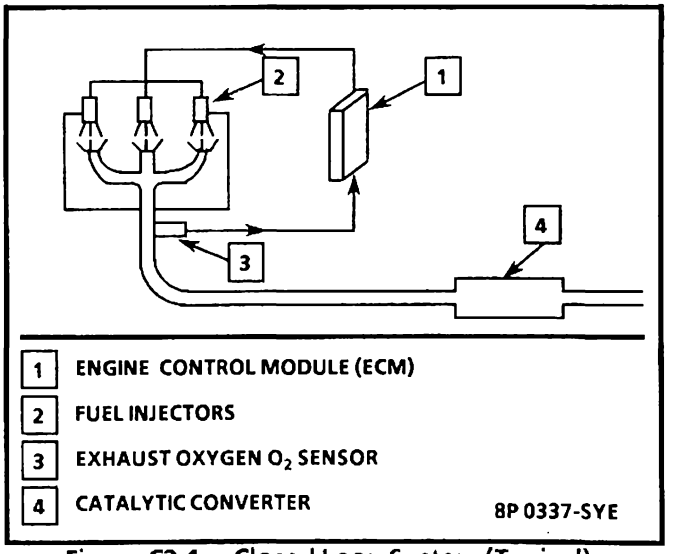

Figure C2-1 - Closed Loop System (Typical)

Starting Mode

When the ignition is first turned "ON", the ECM will turn "ON" the fuel pump relay for two seconds, and the fuel pump will build up pressure. The ECM then checks the Coolant Temperature Sensor (TPS), Throttle Position Sensor (TPS), Manifold Air Temperature (MAT) Sensor and determines The proper air / fuel ratio for starting . This ranges from 1.5 : 1 at -36°C (-33°F) to 14.7 : 1 at 94°C (201°F). The ECM controls the amount of fuel delivered in the Starting Mode by changing how long the injectors are turned "ON" and "OFF". This is done by "pulsing" the injectors for very short times.

Clear Flood Mode

If the engine floods, clear it by pushing the accelerator pedal down all the way. The ECM then pulses the injectors at an air/fuel ratio of 20:1 The ECM holds this injector rate as long as the throttle stays wide open, and the engine rpm is below 600. If the throttle position becomes less than 80%, the ECM returns to the Starting Mode.

Run Mode

The Run Mode has two conditions called "Open Loop" and "Closed Loop".

When the engine is first started, and rpm is above 400 rpm, the system goes into "Open Loop" operation. In "Open Loop", the ECM will ignore the signal from the oxygen (O_2) sensor, and calculate the air/fuel ratio based on inputs from the CTS and MAF sensors.

The system will stay in "Open Loop" until the following conditions are met:

1. The O_2 sensor has varying voltage output, showing that it is hot enough to operate properly. (This depends on exhaust gas temperature.)
2. The coolant temperature sensor is above a specified temperature.
3. A specific amount of time has elapsed after starting the engine.

The specific values for the above conditions vary with different engines, and are stored in the PROM. When these conditions are met, the system goes into "Closed Loop" operation. In "Closed Loop", the ECM will calculate the air/fuel ratio (injector on-time) based on the signal from the O_2 sensor. This allows the air/fuel ratio to stay very close to 14.7:1 .

Acceleration Mode

The ECM looks at rapid changes in throttle position and air flow, and provides extra fuel.

Deceleration Mode

When the driver releases the accelerator pedal, air flow into the engine is reduced. The corresponding changes in throttle position and manifold air pressure are relayed to the ECM, which reduces the injector pulse width to reduce fuel flow. If the deceleration is very rapid, or for long periods (such as long closed throttle coast-down), the ECM may shut "OFF" fuel completely to protect the catalytic converter.

Battery Voltage Correction Mode

When battery voltage is low, the ECM can compensate by:

- Increasing the amount of fuel delivered;
- Increasing the idle rpm; and
- Increasing ignition dwell time.

Fuel Cutoff Mode

No fuel is delivered by the injector when the ignition is "OFF". This prevents dieseling. Also, fuel is not delivered if no reference pulses are seen from the distributor, which means the engine is not running. This prevents flooding.

FUEL METERING SYSTEM COMPONENTS

The Fuel Metering System (Figure C2-2) is made up of the following parts:

- Fuel supply components (fuel tank, pump and lines).
- Fuel pump electrical circuit
- Fuel rail assembly, including:
  - Fuel injectors
  - Pressure regulator assembly
- Throttle body assembly, including:
  - Idle Air Control (IAC) Valve
  - Throttle Position Sensor (TPS)

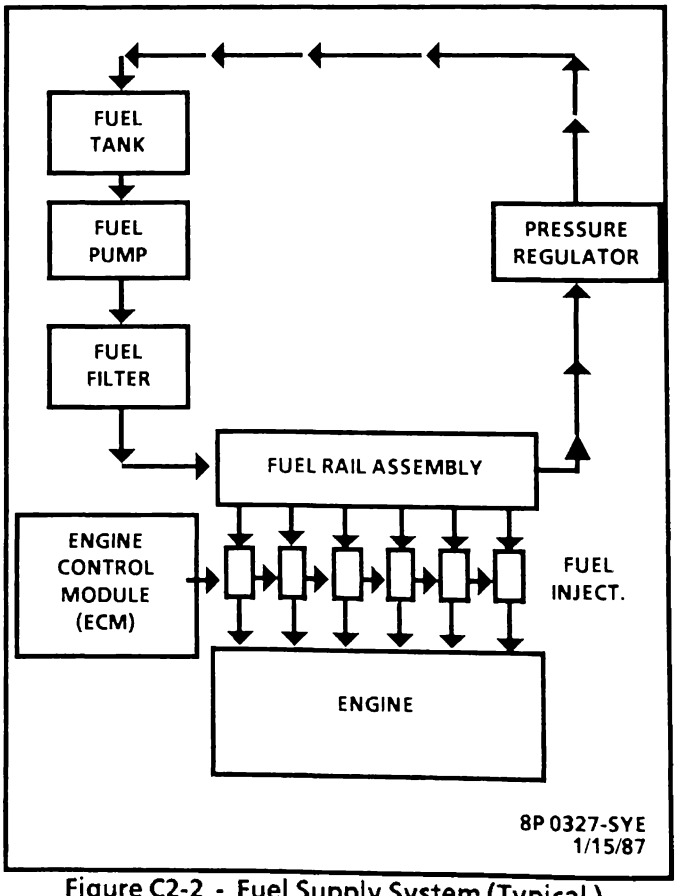

Figure C2-2 - Fuel Supply System (Typical)

FUEL SUPPLY COMPONENTS

The fuel supply is stored in the fuel tank. An electric fuel pump, located in the fuel tank with the gage sending unit, pumps fuel through an in-line fuel filter to the fuel rail assembly. The pump is designed to provide fuel at a pressure above the pressure needed by the injectors. A pressure regulator, attached to the fuel rail, keeps fuel available to the injectors at a constant pressure. Unused fuel is returned to the fuel tank by a separate line. (See Section "6C" for replacement procedures covering the fuel tank, fuel pump, in-line filter and fuel lines.)

FUEL PUMP ELECTRICAL CIRCUIT

When the ignition switch is turned to the "ON" position (engine not running), the ECM turns the fuel pump relay "ON" for two seconds, causing the fuel pump to pressurize the fuel system. If the ECM does not receive ignition reference pulses (engine cranking or running) within two seconds, it will shut "OFF" the fuel pump relay, causing the fuel pump to stop.

As a backup system to the fuel pump relay, the fuel pump can also be turned "ON" by the oil pressure switch. The oil pressure sender has two internal circuits. One operates the oil pressure gage in the instrument cluster, and the other is a normally open switch which closes when oil pressure reaches about 28 kPa (4 psi). If the fuel pump relay fails, the oil pressure switch will run the fuel pump.

An inoperative fuel pump relay can result in long cranking times, particularly if the engine is cold. The oil pressure switch will turn "ON" the fuel pump as soon as oil pressure reaches 28 kPa (4 psi).

FUEL RAIL ASSEMBLY

The fuel rail assembly is mounted to the intake manifold and performs several jobs: it positions the injectors in the intake manifold, it distributes fuel evenly to the injectors, and it integrates the fuel pressure regulator into the fuel metering system.

Fuel Injectors

The port fuel injector assembly is a solenoid operated device controlled by the ECM that meters pressurized fuel to a single engine cylinder (Figure C2-3). The ECM energizes the injector solenoid, which opens a pintle valve, allowing fuel flow through the nozzle. Fuel is injected at the back side of the intake valve which causes the fuel to become further atomized and vaporized before entering the combustion chamber.

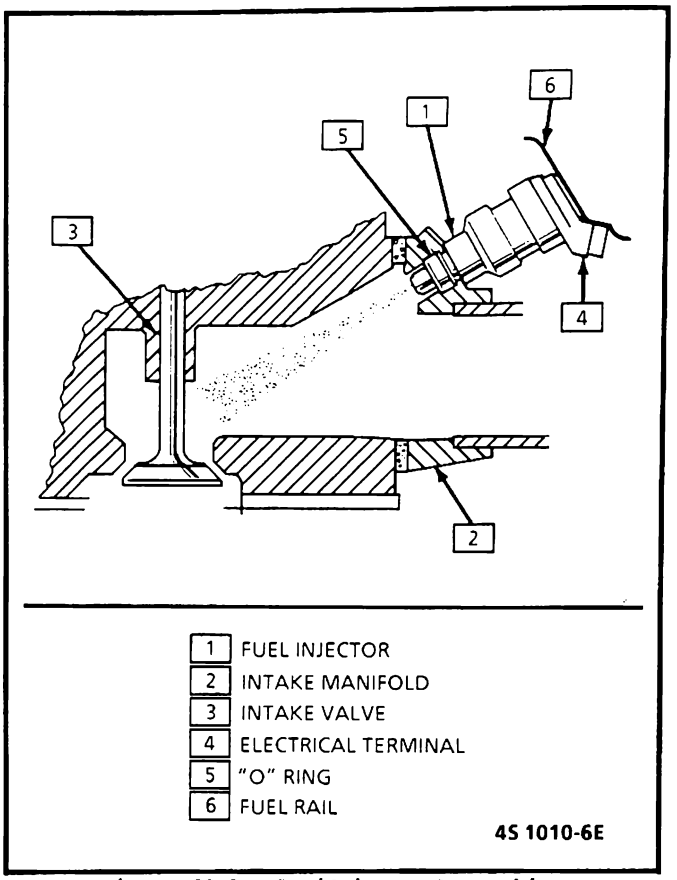

Figure C2-3 - Fuel Injector Assembly

An injector that is stuck partly open will cause loss of pressure after engine shut down. Consequently, long cranking times would be noticed on some engines. Dieseling could also occur because some fuel could be delivered to the engine after the ignition is turned "OFF".

Pressure Regulator Assembly

The pressure regulator assembly is a diaphragm-operated relief valve with fuel pump pressure on one side, and regulator spring pressure and intake manifold vacuum on the other (Figure C2-4). The function of the regulator is to maintain a constant pressure differential across the injectors at all times. The pressure regulator compensates for engine load by increasing fuel pressure as engine vacuum drops.

If the pressure is too low, poor performance could result. If the pressure is too high, excessive odor and a Code 45 may result. CHART A-7 has information on diagnosing fuel pressure conditions.

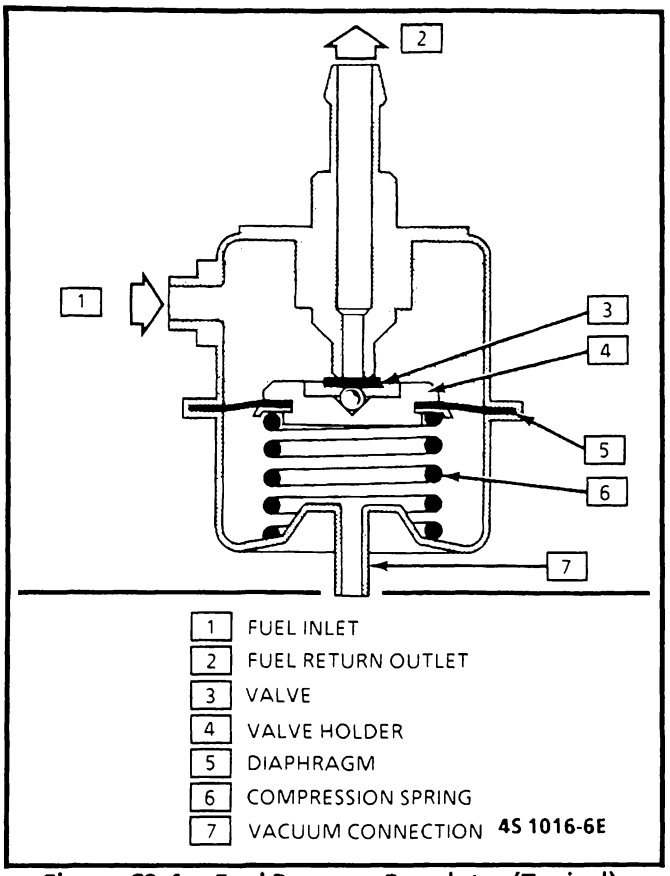

Figure C2-4 - Fuel Pressure Regulator (Typical)

THROTTLE BODY ASSEMBLY

The throttle body assembly is attached to the intake manifold, and is used to control air flow into the engine, thereby controlling engine output. The throttle valve within the throttle body is opened by the driver through the accelerator controls. During engine idle, the throttle valve is almost closed, and air flow control is handled by the Idle Air Control (IAC) valve, described below. To prevent throttle valve icing during cool weather operation, engine coolant is directed through the bottom portion of the throttle body.

Vacuum ports located at, above, or below the throttle valve are used to generate vacuum signals needed by various components. The throttle body also provides the location for mounting the Throttle Position Sensor (TPS) described below.

Idle Air Control (IAC) Valve Assembly

Engine idle speed is controlled by the ECM through the Idle Air control (IAC) valve mounted on the throttle body (Figures C2-5,6). The ECM sends voltage pulses to the IAC motor windings causing the IAC pintle to move "IN" or "OUT" a given distance (number of steps) for each pulse, called counts. The pintle movement controls the air flow around the throttle valve, which in turn, controls engine idle speed.

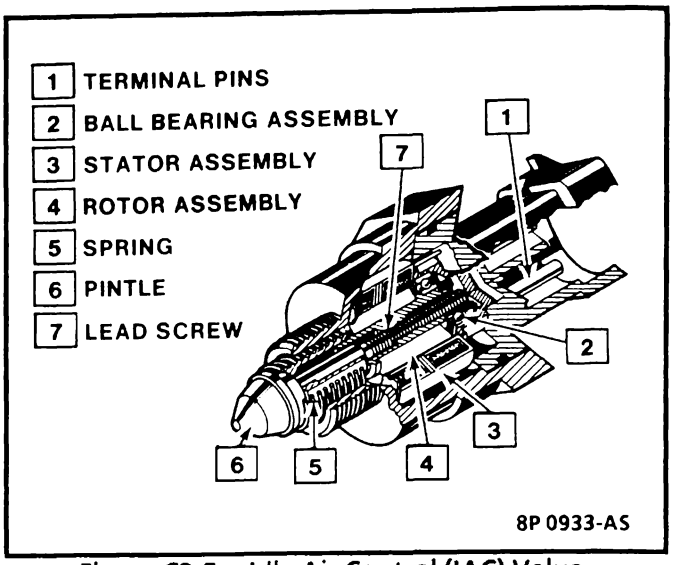

Figure C2-5 - Idle Air Control (IAC) Valve

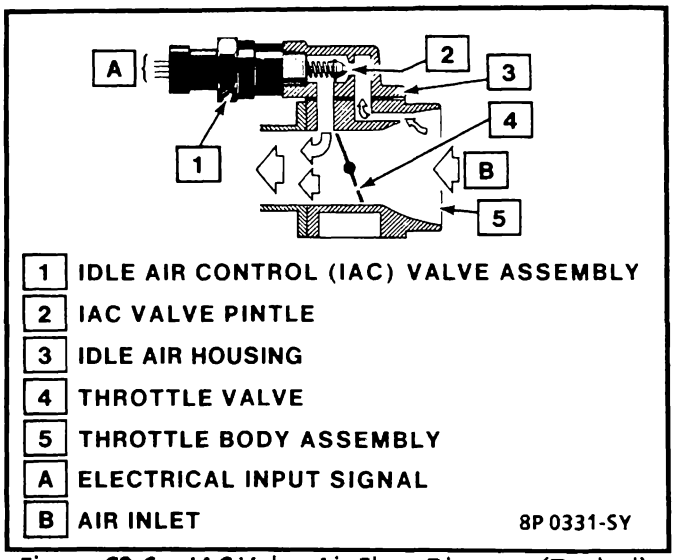

Figure C2-6 - IAC Valve Air Flow Diagram (Typical)

- Engine idle speed is a function of total air flow into the engine based on IAC valve pintle position + PCV flow + throttle valve opening + calibrated vacuum loss through accessories.
- "Controlled" idle speed is programmed into the ECM, which determines the correct IAC valve pintle position to maintain the desired idle speed for all engine operating conditions and loads.
- The minimum idle air rate is set at the factory with a stop screw. This setting allows enough air flow by the throttle valve to cause the IAC valve pintle to be positioned a calibrated number of steps (counts), from the seat, during "controlled" idle operation.
- If the IAC valve is disconnected and reconnected with the engine running, the idle speed may be wrong. In this case, the IAC valve can be reset by doing the following: depress accelerator pedal slightly, start and run engine for five seconds, then turn ignition "OFF" for ten seconds.

Throttle Position Sensor (TPS)

The TPS is mounted on the side of the throttle body opposite the throttle lever. Its function is to sense the throttle valve angle and relay that information to the ECM. Knowledge of throttle angle is needed by the ECM to generate the required injector control signals (pulses). Refer to Section"6E3-C1" for further information on the TPS.

DIAGNOSIS

FUEL METERING SYSTEM

Always start with the "Diagnostic Circuit Check" in Section "6E3-A". This will reduce diagnosis time, and prevent unnecessary parts replacement. The diagnosis of the "Fuel Metering System" is covered in CHART A-3, "Engine Cranks but Will Not Run," and CHART A-7, "Fuel System Pressure Test." These charts cover the diagnosis of the injectors, pressure regulator, and the fuel pump. Diagnosis of the fuel pump relay is covered in CHART A-5.

If a problem occurs in the fuel metering system, it usually results in either a rich or lean exhaust condition. This condition is sensed by the oxygen sensor and causes the ECM to change the fuel calculation (injector pulse width). The change made to the fuel calculation will be indicated by a change in the integrator and block learn values, which can be monitored by a "Scan" tool. A short term change to the fuel calculation is indicated by the integrator value, while a long term change is indicated by the block learn value. Average integrator and block learn values will be around 128, but may vary slightly from engine to engine.

Important

When using a "Scan" tool to observe integrator and block learn values, remember that if the system is in control, no action is required unless a driveability symptom is present. Listed below are examples of lean and rich conditions with the system in control and out of control.

- A momentary *lean* condition (system is *in* control) will appear on "Scan" tool as:
  - Integrator value above 128 (adding fuel)
  - Block learn value around 128

- A long term *lean* condition (system is *in* control) will appear on "Scan" tool as:
  - Integrator value around 128
  - Block learn value above 128 (added fuel)

- A long term *lean* condition (system is *out of control)* will appear on "Scan" tool as:
  - Integrator value well above 128 (adding fuel)
  - Block learn value well above 128 (added fuel)

If both the integrator and block learn values are fixed well above 128, see Code 44, for items which can cause a lean system.

- A momentary *rich* condition (system is *in* control) will appear on "Scan" tool as:
  - Integrator value less than 128 (reducing fuel)
  - Block learn value around 128

- A long term *rich* condition (system is *in* control) will appear on "Scan" tool as:
  - Integrator value around 128
  - Block learn value less than 128 (reduced fuel)

- A long term *rich* condition (system is *out of control)* will appear on "Scan" tool as:
  - Integrator value much less than 128 (reducing fuel)
  - Block learn value much less than 128 (reduced fuel)

If the integrator and block learn values are fixed well below 128, see Code 45, for items which can cause the system to run rich. If a driveability symptom exists, refer to the particular symptom in Section "B" for additional items to check.

FUEL SYSTEM PRESSURE TEST

A Fuel System Pressure Test is part of several of the Diagnostic Charts and Symptom checks. To perform this test, use the procedure in CHART A-7.

IDLE AIR CONTROL (IAC) VALVE

A "Scan" tool will read IAC position in steps (counts). "0" steps indicates the ECM is commanding the IAC to be driven all the way in, to a fully seated position, and this is usually caused by a vacuum leak.

The higher the number of counts the more air is being allowed to pass the IAC valve. CHART C-2C can be used to diagnose the IAC valve. Also refer to "Rough, Unstable, or Incorrect Idle, Stalling" in the Symptoms Section "B" for other possibilities for the cause of idle problems.

ON-CAR SERVICE

FUEL PUMP RELAY

A fuel pump relay is mounted in the engine compartment (see Figure C2-7). For diagnosis of the fuel pump relay circuit, refer to the CHART A-5.

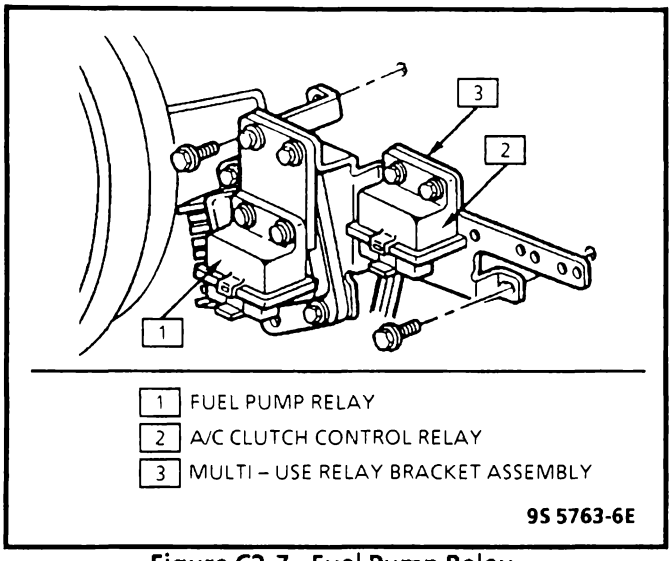

Figure C2-7 - Fuel Pump Relay

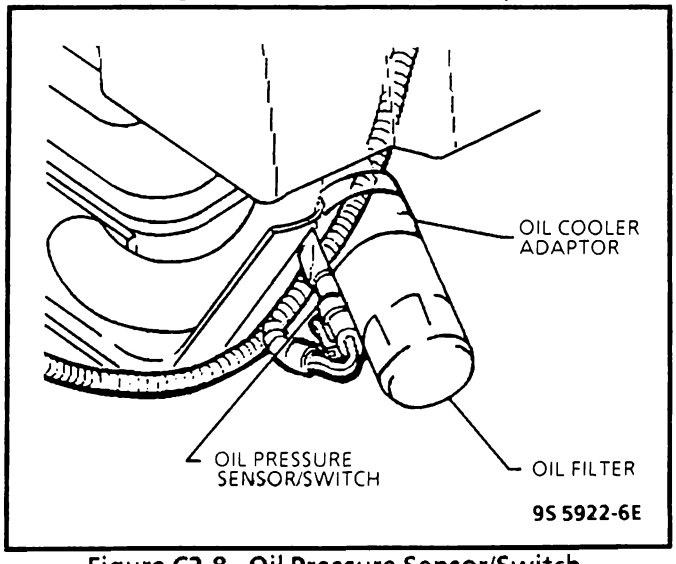

Figure C2-8 - Oil Pressure Sensor/Switch

OIL PRESSURE SENSOR/SWITCH

The oil pressure sensor/switch mounted to the oil cooler adapter located at the front of the engine (Figure C2-8).

Remove or Disconnect (Figure C2-8)

1. Electrical connector.
2. Oil pressure sensor/switch.

Install or Connect (Figure C2-8)

- Reverse removal procedure.

PORT FUEL INJECTION COMPONENTS

CAUTION: **To reduce the risk of fire and personal injury, it is necessary to relieve the fuel system pressure before servicing fuel system components.**

After relieving system pressure, a small amount of fuel may be released when servicing fuel lines or connections. In order to reduce the chance of personal injury, cover the fuel line with a shop towel before disconnecting, to catch any fuel that may leak out. Place the towel in an approved container when disconnect is completed.

FUEL PRESSURE RELIEF PROCEDURE

Tool Required:
J 34730-1 Fuel Pressure Gage

1. Disconnect negative battery terminal to avoid possible fuel discharge if an accidental attempt is made to start the engine.
2. Loosen fuel filler cap to relieve tank vapor pressure.
3. Connect gage J 34730-1 to fuel pressure connection. Wrap a shop towel around fitting while connecting gage to avoid spillage.
4. Install bleed hose into an approved container and open valve to bleed system pressure. Fuel connections are now safe for servicing.
5. Drain any fuel remaining in gage into an approved container.

FUEL RAIL ASSEMBLY

CAUTION: **To reduce the risk of fire and personal injury that may result from a fuel leak, always replace O-ring seals exposed during component service.**

NOTICE:
- Use care in removing the fuel rail assembly, to prevent damage to the injector electrical connector terminals and the injector spray tips. When removed, support the rail to avoid damaging its components.
- Prevent dirt and other contaminants from entering open lines and passages. Fittings should be capped, and holes plugged, during servicing.

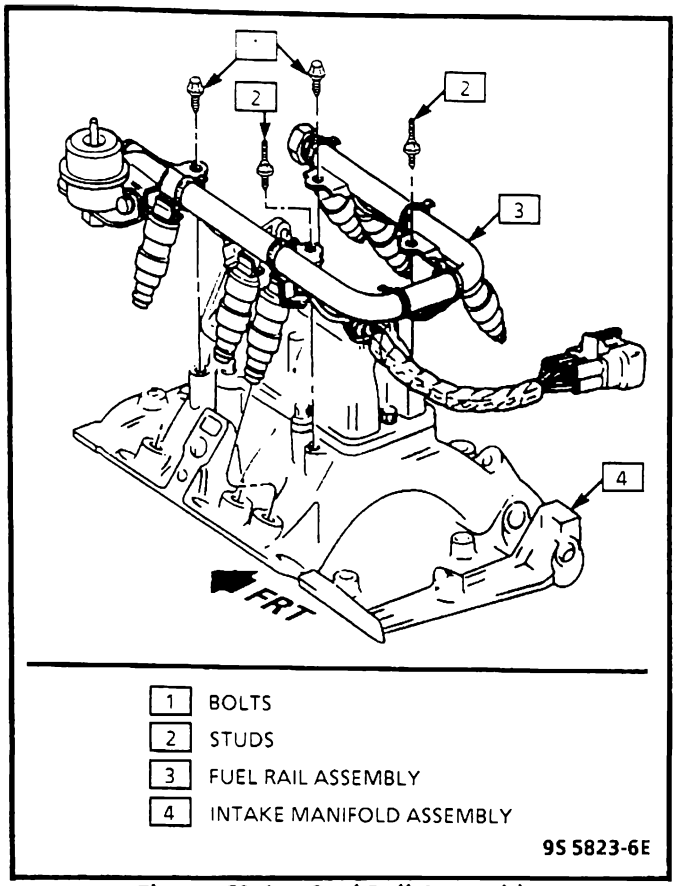

Figure C2-9 - Fuel Rail Assembly

Clean

Before removal, the fuel rail assembly may be cleaned with a spray type engine cleaner, such as GM X-30A or equivalent, following package instructions. Do not immersed fuel rail in liquid cleaning solvent.

Remove or Disconnect (Figure C2-9)

1. Negative battery terminal.
2. Relieve fuel system pressure.
3. Power brake booster vacuum hose at throttle body.
4. PCV/boost gage sensor vacuum harness.
5. Throttle, T.V., and cruise control cables.
6. Accelerator control cable bracket attaching nut/bolts.
7. Cable bracket.
8. Ignition coil & module bracket/brace attaching nuts/bolts
9. Ignition coil & module, bracket and brace.
10. EGR valve cover.
11. Injector electrical connectors.
12. Vacuum hose at pressure regulator.
13. Fuel feed and return lines.
    - Use a back-up wrench on fuel rail fittings to prevent them from turning.
14. O-ring seals from fuel lines and discard.
15. Fuel rail attaching bolts/studs.
16. Fuel rail assembly.

Disassemble

- O-ring seal from spray tip end of each injector and discard.

Assemble

- Lubricate new injector O-ring seals with engine oil, and install on each injector.

Install or Connect (Figure C2-9)

1. Position fuel rail assembly on intake manifold. Push down on rail to seat injectors in manifold.
2. Fuel rail attaching bolts/studs.

Tighten

- Fuel rail bolts/studs to 15.0 N·m (11 lb.ft.)

3. New O-ring seals on fuel lines.
4. Fuel feed and return lines.

Tighten

- Fuel line nuts to 30.0 N·m (22 lb.ft.)
- Use a back-up wrench on fuel rail fittings to prevent them from turning.

5. Vacuum hose to pressure regulator.
6. Injector electrical connectors.
7. EGR valve cover.
8. Ignition coil & module, bracket and brace.
9. Bracket/brace attaching nuts/bolts.

Tighten

- Bracket attaching nuts to 17.0 N·m (13 lb.ft.)
- Bracket/brace attaching bolts to 27.0 N·m (20 lb.ft.)

10. Accelerator control cable bracket.
11. Bracket attaching nut/bolts.

Tighten

- Bracket attaching nut to 27.0 N·m (20 lb.ft.)
- Bracket attaching bolts to 4.0 N·m (35 lb.in.)

12. Throttle, T.V., and cruise control cables.
13. PCV/boost gage sensor vacuum harness.
14. Power brake booster vacuum hose to throttle body.

Inspect

- With engine "OFF" and ignition "ON," check for fuel leaks.

FUEL INJECTORS

CAUTION: **To reduce the risk of fire and personal injury that may result from a fuel leak, always replace O-ring seals exposed during component service.**

NOTICE: Use care in removing injectors to prevent damage to the electrical connector pins on the injector, and the nozzle. The fuel injector is serviced as a complete assembly only. Since it is an electrical component, it should not be immersed in any type of cleaner.

Remove or Disconnect

1. Negative battery terminal.
2. Relieve fuel system pressure.
3. Fuel rail assembly.

Disassemble

1. Injector retaining clip.
2. Fuel injector.
3. Injector O-ring seals from both ends of injector and discard.

Important

Different injectors are calibrated for different flow rates. When ordering new fuel injectors, be sure to order the identical part number that is inscribed on the old injector.

Assemble

1. Lubricate new injector O-ring seals with engine oil, and install on injector.
2. Fuel injector.
3. Injector retaining clip.

Install or Connect

1. Fuel rail assembly.
2. Negative battery terminal.

Inspect

- With engine "OFF" and ignition "ON," check for fuel leaks.

PRESSURE REGULATOR ASSEMBLY

CAUTION: **To reduce the risk of fire and personal injury that may result from a fuel leak, always replace O-ring seals exposed during component service.**

Remove or Disconnect

1. Negative battery terminal.
2. Relieve fuel system pressure.
3. Pressure regulator attaching bolts/screws.
4. Pressure regulator assembly and O-ring seal. Discard seal.

Install or Connect

1. Lubricate new pressure regulator O-ring seal with engine oil, and install.
2. Pressure regulator assembly.
3. Pressure regulator attaching bolts/screws.
4. Negative battery terminal.

Inspect

- With engine "OFF" and ignition "ON," check for fuel leaks.

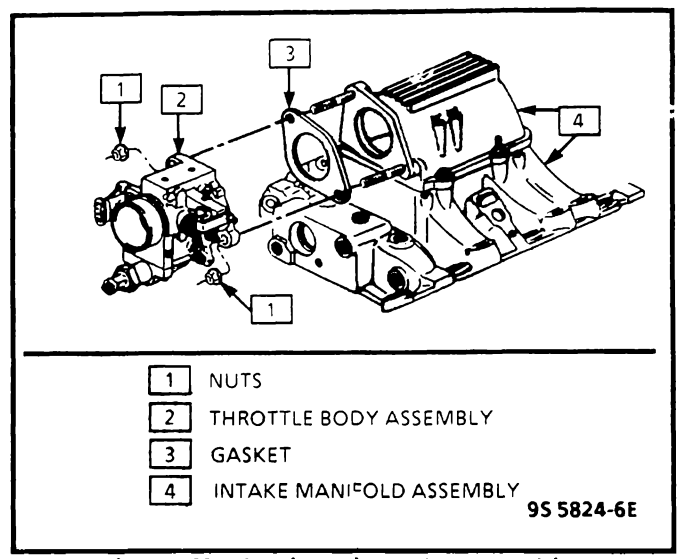

Figure C2-10 - Throttle Body Assembly

THROTTLE BODY ASSEMBLY

Cleaning

- The throttle bore and valve deposits may be cleaned on-vehicle, using carburetor cleaner and a parts cleaning brush. Do Not use a cleaner that contains Methyl Ethyl Ketone. It is an extremely strong solvent, and not necessary for this type of deposit.
- The throttle body metal parts may be cleaned following disassembly, in a cold immersion-type cleaner such as GM X-55 or equivalent.

NOTICE: The Throttle Position Sensor (TPS) and Idle Air Control (IAC) valve should not come in contact with solvent or cleaner, as they may be damaged.

Throttle Body R/R

Remove or Disconnect (Figure C2-10)

1. Negative battery terminal.
2. Partially drain radiator, to allow coolant hoses at throttle body to be disconnected.

3. Air intake duct.
4. Vacuum harness connectors and power brake booster vacuum hose at throttle body.
5. IAC valve and TPS electrical connectors.
6. Coolant hoses at throttle body.
7. Throttle, T.V., and cruise control cables.
8. Throttle body retaining nuts.
9. Throttle body and gasket. Discard gasket.

Clean

NOTICE: Use care in cleaning old gasket material from machined aluminum surfaces. Sharp tools will damage sealing surfaces.

- Gasket sealing surfaces.

Install or Connect (Figure C2-10)

1. Throttle body with new gasket.
2. Throttle body retaining nuts.

Tighten

- Throttle body nuts to 27.0 N·m (20 lb.ft.)

3. Throttle, T.V., and cruise control cables.

Important

- Make sure throttle and cruise control cables do not hold throttle open. Refer to Section "6C" "Engine Fuel" for additional information on accelerator controls.

4. Coolant hoses to throttle body.
5. IAC valve and TPS electrical connectors.
6. Vacuum harness connectors and power brake booster vacuum hose to throttle body.
7. Air intake duct.
8. Refill radiator to replace lost coolant.
9. Negative battery terminal.

Inspect

- With engine "OFF" check to see that the accelerator pedal is free:
  - Depress pedal to the floor and release.

THROTTLE POSITION SENSOR (TPS)

Remove or Disconnect (Figure C2-11)

1. With ignition "OFF", disconnect TPS electrical connector.
2. TPS attaching screws and retainers.
3. Throttle position sensor (TPS).

NOTICE: The TPS is an electrical component and must not be soaked in any liquid cleaner or solvent, as damage may result.

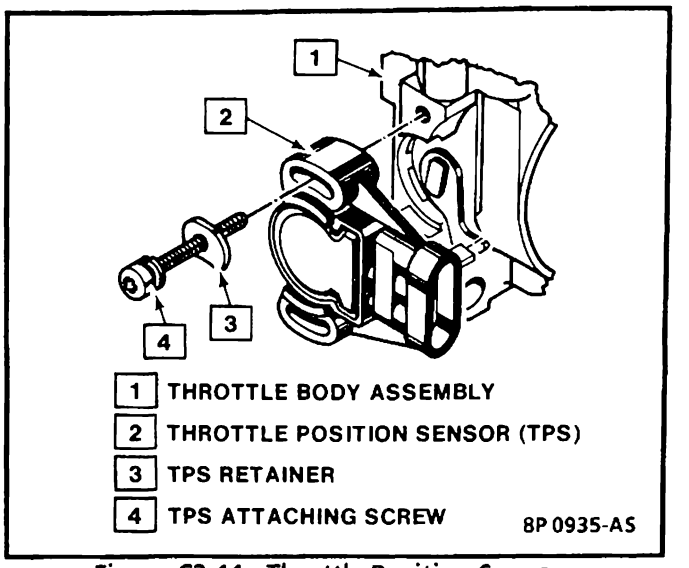

Figure C2-11 - Throttle Position Sensor

Install or Connect (Figure C2-11)

1. With throttle valve in the closed position, install the throttle position sensor on the throttle body assembly, making sure TPS lever lines up with the TPS drive lever on the throttle shaft.
2. Retainers and TPS attaching screws.
   - Finger tighten only.

Adjust

- If replacing TPS, refer to adjustment procedure found in Section "6E3-C1".
- If transferring TPS to a new throttle body, refer to adjustment procedure in "Throttle Body Replacement" procedure.

Tighten

- TPS attaching screws to 2.0 N·m (18 lb.in.)

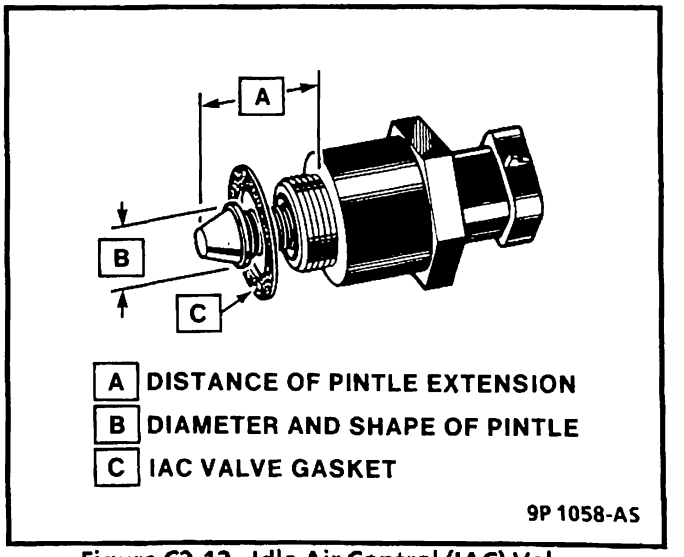

Figure C2-12 - Idle Air Control (IAC) Valve

IDLE AIR CONTROL (IAC) VALVE

Remove or Disconnect (Figure C2-12)

1. Airduct - mass air flow sensor to turbocharger.
2. With ignition "OFF", disconnect IAC valve electrical connector.
3. IAC valve assembly and gasket.
   - Discard gasket.

NOTICE: On IAC valves that have been in service: Do Not push or pull on the IAC valve pintle. The force required to move the pintle may damage the threads on the worm drive.
Also, Do Not soak IAC valve in any liquid cleaner or solvent, as damage may result.

Cleaning and Inspection

- Both original and replacement IAC valves have a special factory applied thread locking compound on the screw threads. If the valve removed from the throttle body is being reinstalled, Do Not try to remove any of the thread locking compound that may be remaining on the threads.
- Clean IAC valve gasket sealing surface, pintle valve seat and air passage.
  - Use carburetor cleaner to remove carbon deposits. Do Not use a cleaner that contains Methyl Ethyl Ketone. It is an extremely strong solvent, and not necessary for this type of deposit.
  - Shiny spots on the pintle or seat are normal, and do not indicate misalignment or a bent pintle shaft.
  - If air passage has heavy deposits, remove throttle body for complete cleaning.

Important

- If installing new IAC valve, be sure to replace with an identical part. IAC valve pintle shape and diameter are designed for the specific application.

Measure (If installing a new IAC Valve) (Figure C2-12)

- Distance between tip of IAC valve pintle and mounting surface.
  - If greater than 28 mm, use finger pressure to slowly retract the pintle. The force required to retract the pintle of a *new* valve will not cause damage to the valve.

Install or Connect (Figure C2-12)

1. IAC valve assembly with new gasket.

Tighten

- Valve to 18.0 N·m (13 lb. ft.)
- Use a socket or box wrench on valve hex.

2. Electrical connector.
3. Airduct - mass air flow sensor to turbocharger.
4. Reset IAC valve pintle position:
   a. Depress accelerator pedal slightly.
   b. Start and run engine for five seconds.
   c. Turn ignition "OFF" for ten seconds.
   d. Restart engine and check for proper idle operation.

IDLE AIR CONTROL HOUSING

Remove or Disconnect

1. Negative battery terminal.
2. Throttle body from engine.
3. IAC valve and gasket.
   - Discard gasket.
4. Idle air control housing attaching screws.
5. Housing and gasket.
   - Discard Gasket.

Clean

NOTICE: Use care in cleaning old gasket material from machined aluminum surfaces. Sharp tools will damage sealing surfaces.

- Gasket sealing surfaces.

Install or Connect

1. New idle air control housing gasket.
2. Idle air control housing.
3. Housing attaching screws.

Measure (If installing a new IAC Valve) (Figure C2-12)

- Distance between tip of IAC valve pintle and mounting surface.
  - If greater than 28 mm, use finger pressure to slowly retract the pintle. The force required to retract the pintle of a *new* valve will not cause damage to the valve.

4. IAC valve with new gasket.

Tighten

- Valve to 18.0 N·m (13 lb. ft.)
- Use a socket or box wrench on valve hex.

5. IAC valve electrical connector.
6. Throttle body with new gasket.
7. Negative battery terminal.

8. Reset IAC valve pintle position:
   a. Depress accelerator pedal slightly.
   b. Start and run engine for five seconds.
   c. Turn ignition "OFF" for ten seconds.
   d. Restart engine and check for proper idle operation.

VACUUM TUBE MODULE

Remove or Disconnect

1. Negative battery terminal.
2. Vacuum harness connectors and power brake booster vacuum hose at tube module.
3. Tube module attaching bolts/screws.
4. Tube module and gasket.
   - Discard gasket.

Clean

NOTICE: Use care in cleaning old gasket material from machined aluminum surfaces. Sharp tools will damage sealing surfaces.

- Gasket sealing surfaces.

Install or Connect

1. New tube module gasket.
2. Tube module.
3. Tube module attaching bolts/screws.

Tighten

- Tube module bolts/screws to 4.0 N·m (35 lb. in.)

4. Vacuum harness connectors and power brake booster vacuum hose.
5. Negative battery terminal.

THROTTLE BODY REPLACEMENT

Remove or Disconnect

1. Negative battery terminal.
2. Throttle body from engine.

Inspect

- Replacement throttle body for items that will need to be transferred from old unit.

Disassemble

- Components to be transferred from old unit.

Assemble

- Components being transferred to new unit.

Install or Connect

1. Replacement throttle body onto engine.
2. Negative battery terminal.
3. Adjust TPS and minimum idle speed.

Important

- Minimum idle speed should only be adjusted when installing a replacement throttle body.
- The idle stop screw is used to regulate minimum idle speed of the engine. On original equipment throttle bodies, it is adjusted at the factory, then covered with a cap to discourage unnecessary readjustment.

NOTICE: The minimum idle speed adjustment is critical to vehicle performance and component durability. Incorrect minimum idle speed adjustment (too high), will cause the IAC valve pintle to constantly bottom on its seat and result in early valve failure. If minimum idle speed is adjusted too low, the vehicle may not start in cold weather or may stall during warm-up.

Adjust

1. Block drive wheels, and apply parking brake.
2. Connect a "Scan" tool to the ALDL connector.
3. Turn ignition to "ON" position.
4. Select TPS voltage display on "Scan" tool, and adjust TPS to obtain .40 ± .05 volt.
   - Tighten attaching screws enough to hold TPS in place. Readjustment may be required following minimum idle speed adjustment.
5. Select "Field Service Mode" on "Scan" tool (refer to "Scan" tool instructions). This will cause IAC valve pintle to seat in throttle body (closing air passage). Wait at least 45 seconds, disconnect IAC valve connector, then exit "Field Service Mode."
6. Place transmission in "park." Start and run engine until it reaches normal operating temperature, and "Closed Loop" operation as read on the "Scan" tool.
   - It may be necessary to hold throttle open slightly to maintain idle.
7. Select "engine rpm" on "Scan" tool, and read engine speed.

Important

- Engine should be at normal operating temperature and in "Closed Loop."
- Accessories (A/C, rear defog, etc.), and engine cooling fans should be "OFF."
- Make sure throttle and cruise control cables do not hold throttle open.
- Idle speed should be 500 ± 50 rpm.

8. Adjust minimum idle speed if necessary.
9. Turn ignition "OFF."
10. Connect IAC valve electrical connector.
11. Turn ignition to "ON" position, and recheck TPS voltage on "Scan" tool. Adjust if necessary, to obtain .40 ± .05 volt.

Tighten

- TPS attaching screws to 2.0 N·m (18 lb.in.). Make sure adjustment did not change after tightening screws.

12. Reset IAC valve pintle position:
    a. Depress accelerator pedal slightly.
    b. Start and run engine for five seconds.
    c. Turn ignition "OFF" for ten seconds.
    d. Restart engine and check for proper idle operation.
13. Disconnect "Scan" tool.
14. Remove block from drive wheels.

PARTS INFORMATION

PART NAME	GROUP
Relay, Fuel Pump	3.900
Sensor/Switch, Oil Pressure	1.800
Seals, Fuel Feed/Return Pipes (O-rings)	3.163
Rail, Fuel Feed	3.330
Injector, fuel	3.300
Regulator, Fuel Pressure	3.330
Sensor, Throttle Position	3.339
Motor, Idle Air Control (IAC Valve)	3.335
Throttle Body	3.335

TORQUE SPECIFICATIONS

Fuel Rail Attach. Bolts/Studs	15.0 N·m (11 lb.ft.)
Fuel Line Nuts	30.0 N·m (22 lb.ft.)
Ignition Coil & Module Bracket Attaching Nuts	17.0 N·m (13 lb.ft.)
Ignition Coil & Module Bracket/Brace Attaching Bolts	27.0 N·m (20 lb.ft.)
Accelerator Cable Control Bracket Attaching Nut	27.0 N·m (20 lb.ft.)
Accelerator Cable Control Bracket Attaching Bolts	4.0 N·m (35 lb.in.)
Throttle Body Retain. Nuts	27.0 N·m (20 lb.ft.)
Throttle Position Sensor	2.0 N·m (18 lb.in.)
Idle Air Control Valve	18.0 N·m (13 lb.ft.)
Vacuum Tube Module Bolts/Screws	4.0 N·m (35 lb.in.)

CHART C-2A

INJECTOR BALANCE TEST

The injector balance tester is a tool used to turn the injector on for a precise amount of time, thus spraying a measured amount of fuel into the manifold. This causes a drop in fuel rail pressure that we can record and compare between each injector. All injectors should have the same amount of pressure drop (± 10 kpa). Any injector with a pressure drop that is 10 kpa (or more) greater or less than the average drop of the other injectors should be considered faulty and replaced.

STEP 1

Engine "cool down" period (10 minutes) is necessary to avoid irregular readings due to "Hot Soak" fuel boiling. With ignition "OFF" connect fuel gauge J347301 or equivalent to fuel pressure tap. Wrap a shop towel around fitting while connecting gage to avoid fuel spillage.

Disconnect harness connectors at all injectors, and connect injector tester J-34730-3, or equivalent, to one injector. On Turbo equipped engines, use adaptor harness furnished with injector tester to energize injectors that are not accessible. Follow manufacturers instructions for use of adaptor harness. Ignition must be "OFF" at least 10 seconds to complete ECM shutdown cycle. Fuel pump should run about 2 seconds after ignition is turned "ON". At this point, insert clear tubing attached to vent valve into a suitable container and bleed air from gauge and hose to insure accurate gauge operation. Repeat this step until all air is bled from gauge.

STEP 2

Turn ignition "OFF" for 10 seconds and then "ON" again to get fuel pressure to its maximum. Record this initial pressure reading. Energize tester one time and note pressure drop at its lowest point (Disregard any slight pressure increase after drop hits low point.). By subtracting this second pressure reading from the initial pressure, we have the actual amount of injector pressure drop.

STEP 3

Repeat step 2 on each injector and compare the amount of drop. Usually, good injectors will have virtually the same drop. Retest any injector that has a pressure difference of 10kPa, either more or less than the average of the other injectors on the engine. Replace any injector that also fails the retest. If the pressure drop of all injectors is within 10kPa of this average, the injectors appear to be flowing properly. Reconnect them and review Symptoms, Section "B".

NOTE: ***The entire test should not be repeated more than once without running the engine to prevent flooding. (This includes any retest on faulty injectors).***

CHART C-2A
INJECTOR BALANCE TEST (PORT)

NOTE: If injectors are suspected of being dirty, they should be cleaned using an approved tool and procedure prior to performing this test. The fuel pressure test in Section A, Chart A-7, should be completed prior to this test.

Step 1. If engine is at operating temperature, allow a 10 minute "cool down" period then connect fuel pressure gauge and injector tester.
1. Ignition "OFF".
2. Connect fuel pressure gauge and injector tester.
3. Ignition "ON".
4. Bleed off air in gauge. Repeat until all air is bled from gauge.

Step 2. Run test:
1. Ignition "OFF" for 10 seconds.
2. Ignition "ON". Record gauge pressure. (Pressure must hold steady, if not see the Fuel System diagnosis, Chart A-7, in Section A).
3. Turn injector on, by depressing button on injector tester, and note pressure at the instant the gauge needle stops.

Step 3.
1. Repeat step 2 on all injectors and record pressure drop on each.
Retest injectors that appear faulty (Any injectors that have a 10 kPa difference, either more or less, in pressure from the average). If no problem is found, review Symptoms Section B.

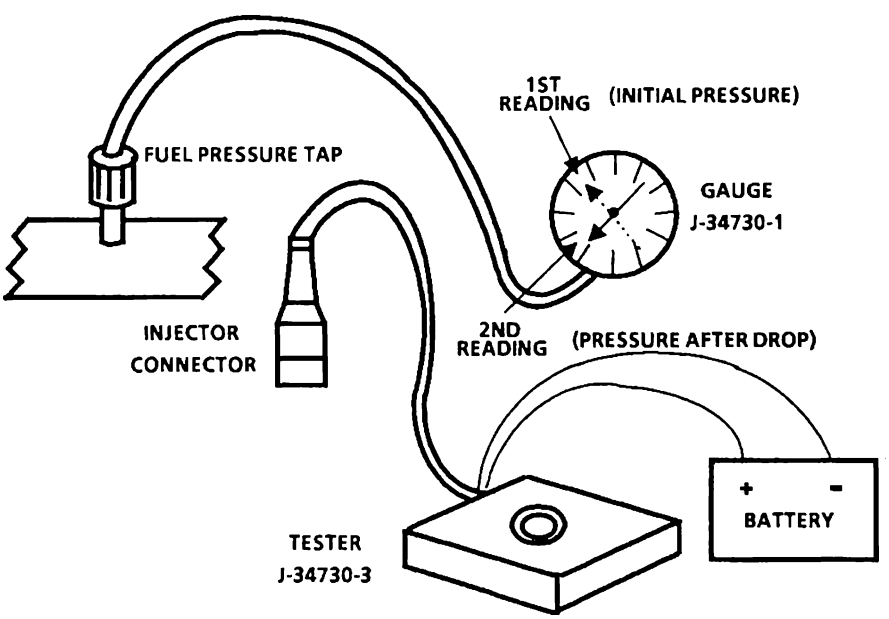

— EXAMPLE —

CYLINDER	1	2	3	4	5	6
1ST READING	225	225	225	225	225	225
2ND READING	100	100	100	90	100	115
AMOUNT OF DROP	125	125	125	135	125	110
	OK	OK	OK	FAULTY, RICH (TOO MUCH) (FUEL DROP)	OK	FAULTY, LEAN (TOO LITTLE) (FUEL DROP)

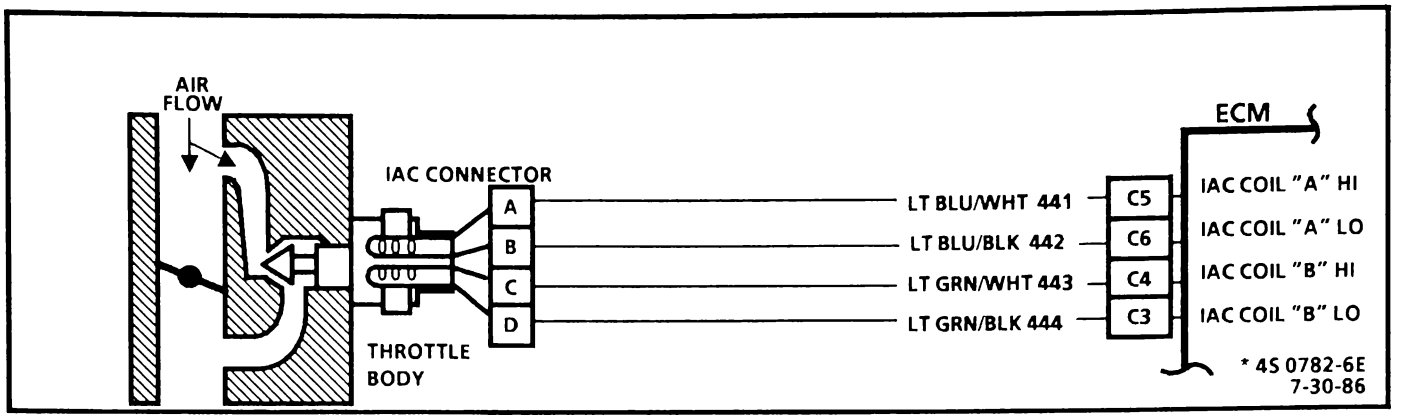

CHART C-2C

IDLE AIR CONTROL (IAC) VALVE CHECK
3.8L TURBO "F" CARLINE (PORT)

Circuit Description:

The ECM controls idle rpm with the IAC valve. To increase idle rpm, the ECM moves the IAC valve out, allowing more air to pass by the throttle plate. To decrease rpm, it moves the IAC valve in, reducing air flow by the throttle plate. A "Scan" tool will read the ECM commands to the IAC valve in counts. The higher the counts, the more air allowed (higher idle). The lower the counts, the less air allowed (lower idle).

Test Description: Step numbers refer to step numbers on diagnostic chart.

1. Continue with test, even if engine will not idle. If idle is to low, "Scan" will display 80 or more counts, or steps. If idle is high, it will display "0" counts. Occasionally an erratic or unstable idle may occur. Engine speed may vary 200 rpm or more up and down. Disconnect IAC. If the condition is unchanged, the IAC is not at fault.
2. When the engine was stopped, the IAC Valve retracted (more air) to a fixed "Park" position for increased air flow and idle speed during the next engine start. A "Scan" will display 100 or more counts.
3. Be sure to disconnect the IAC valve prior to this test. The test light will confirm the ECM signals by a steady or flashing light on all circuits.
4. There is a remote possibility that one of the CKTs is shorted to voltage, which would have been indicated by a steady light. Disconnect ECM and turn the Ign. on and probe terminals to check for this condition.

Diagnostic Aids:

A slow unstable idle may be caused by a system problem that cannot be overcome by the IAC. "Scan" counts will be above 60 counts, if too low, and "0" counts, if too high.

If idle is too high, stop engine. Ignition"ON". Ground diagnostic terminal. Wait 30 seconds for IAC to seat, then, disconnect IAC. Unground diagnostic terminal and start engine. If idle speed is above 800 ± 50 rpm, locate and correct vacuum leak.

- System too lean (High Air/Fuel Ratio)
  Idle speed may be too high or too low. Engine speed may vary up and down, disconnecting IAC does not help. May set Code 44.
  "Scan" and/or Voltmeter will read an oxygen sensor output less than 300 mv (.3v). Check for low regulated fuel pressure or water in fuel. A lean exhaust, with an oxygen sensor output fixed above 800 mv (.8v), will be a contaminated sensor, usually silicone. This may also set a Code 45.
- System too rich (Low Air/Fuel Ratio)
  Idle speed too low. "Scan" counts usually above 80. System obviously rich and may exhibit black smoke exhaust.
  "Scan" tool and/or Voltmeter will read an oxygen sensor signal fixed above 800 mv (.8v).
  Check:
  - High fuel pressure
  - Injector leaking or sticking
- Throttle Body - Remove IAC and inspect bore for foreign material or evidence of IAC valve dragging the bore.
- Refer to "Rough, Unstable, Incorrect Idle or Stalling" in Symptoms in Section "B".

CHART C-2C

IDLE AIR CONTROL (IAC) VALVE CHECK 3.8L TURBO "F" CARLINE (PORT)

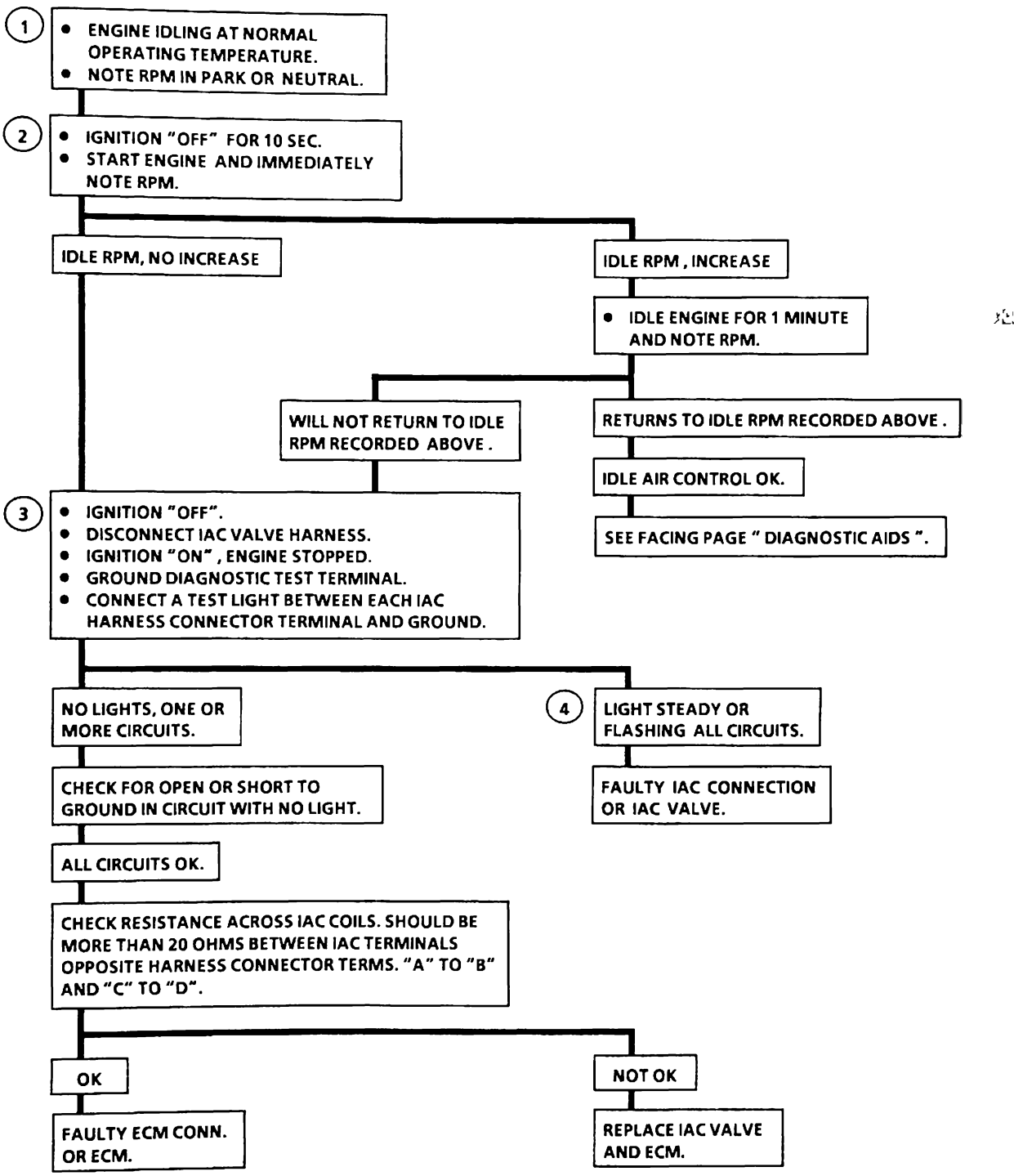

CLEAR CODES AND CONFIRM "CLOSED LOOP" OPERATION AND NO "SERVICE ENGINE SOON" LIGHT.

10-15-86
* 7S 3151-6E

SECTION C3
EVAPORATIVE EMISSION CONTROL SYSTEM (EECS)
CONTENTS

GENERAL DESCRIPTION C3-1
PURPOSE C3-1
FUEL VAPOR CANISTER C3-1
EVAPORATIVE EMISSION SYSTEM C3-1
FUEL TANK PRESSURE CONTROL VALVE .. C3-2
RESULTS OF INCORRECT OPERATION C3-2
DIAGNOSIS C3-2
VISUAL CHECK OF FUEL VAPOR CANISTER . C3-2
FUNCTIONAL TEST
Fuel Vapor Canister Purge Valve C3-2
Tank Pressure Control Valve C3-2
ON-CAR SERVICE C3-3
FUEL VAPOR CANISTER C3-3
FUEL VAPOR CANISTER HOSES C3-3
PARTS INFORMATION C3-3

GENERAL DESCRIPTION

PURPOSE

The Evaporative Emission Control System (EECS) used on all vehicles is the charcoal canister storage method. This method transfers fuel vapor from the fuel tank to an activated carbon (charcoal) storage device (canister) to hold the vapors when the vehicle is not operating. When the engine is running, the fuel vapor is purged from the carbon element by intake air flow and consumed in the normal combustion process.

FUEL VAPOR CANISTER

Gasoline vapors from the fuel tank flow into the tube labeled "tank." Any liquid fuel goes into a reservoir in the bottom of the fuel vapor canister to protect the integrity of the carbon bed above (Figure C3-1). These vapors are absorbed into the carbon. The fuel vapor canister is purged when the engine is running above idle speed. Ambient air is allowed into the fuel vapor canister through the air tube in the top. The air mixes with the vapor and the mixture is drawn into the intake manifold.

EVAPORATIVE EMISSION SYSTEM

The fuel vapor canister is equipped with a normally closed solenoid to control canister purge. The ECM operates the canister purge solenoid which controls vacuum to the purge valve in the charcoal canister. Under cold engine or idle conditions, the canister purge solenoid is turned "OFF" by the ECM, which closes the canister purge solenoid and blocks vacuum to the canister purge valve.

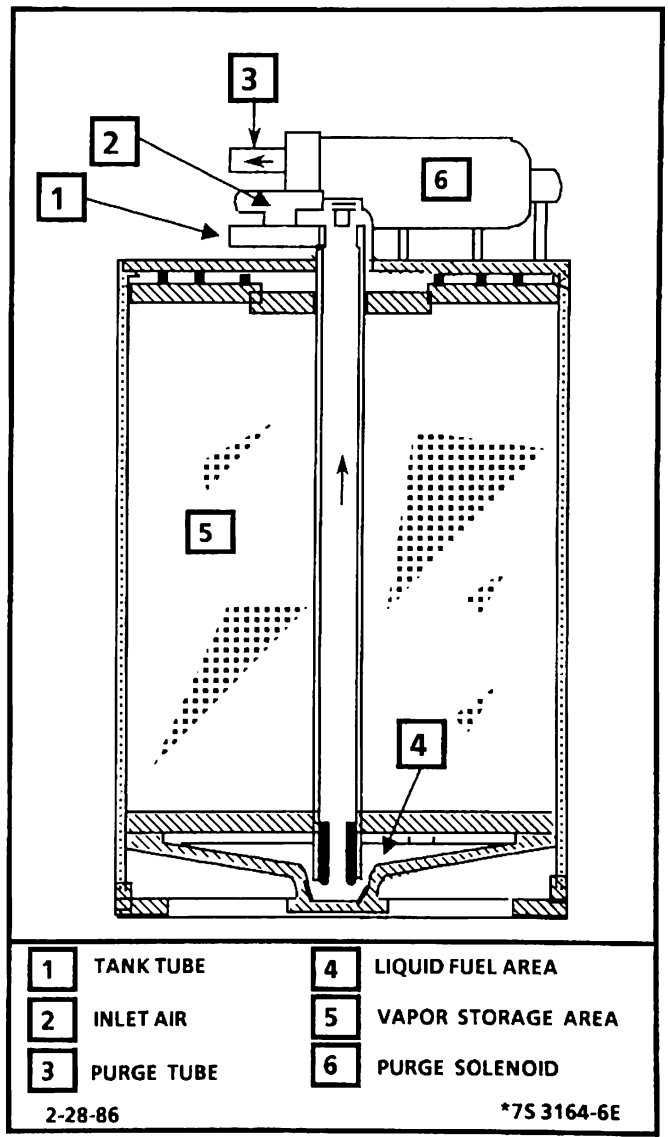

Figure C3-1 - Inverted Function Fuel Vapor Canister - With Encapsulated Canister Purge Solenoid

The ECM turns "ON" the canister purge solenoid and allows purge when:

- The vehicle is above a specified road speed.
- The engine is warm
- After the engine has been running a specified time.
- TPS above a specified throttle opening.

This is an ECM feedback system that increases purge until the ECM senses a rich condition from the oxygen sensor. The purge is then regulated until the ECM no longer receives a rich signal from the oxygen sensor. This system uses a tank pressure control valve to control the flow of vapors from the fuel tank to the canister. To prevent the fuel vapor canister from being pressurized under turbo boost conditions, a check valve is installed in the purge line between the TBI unit and fuel vapor canister.

FUEL TANK PRESSURE CONTROL VALVE

The fuel tank pressure control valve, a combination roll-over, integral pressure and vacuum relief valve. When vapor pressure in the tank exceeds 5 kPa (1" Hg) the valve opens and allows vapors to vent to the fuel vapor canister and then be purged. When the tank pressure drops below the opening point of the valve it will close, keeping vapors in the fuel tank. The valve provides vacuum relief to protect against vacuum build up in the fuel tank and roll-over protection to prevent liquid fuel from entering the fuel vapor canister during normal driving maneuvers.

RESULTS OF INCORRECT OPERATION

Poor idle, stalling and poor driveability can be caused by:

- Inoperative canister purge solenoid
- Damaged fuel vapor canister
- Hoses split, cracked and/or not connected to the proper tubes.

Evidence of fuel loss or fuel vapor odor can be caused by:

- Liquid fuel leaking from fuel lines.
- Cracked or damaged fuel vapor canister
- Disconnected, misrouted, kinked, deteriorated or damaged vapor hoses, or control hoses.

DIAGNOSIS

CANISTER PURGE SOLENOID

The canister purge solenoid operation is covered in the CHART C-3 at the end of this section.

VISUAL CHECK OF FUEL VAPOR CANISTER

Cracked or damaged, replace fuel vapor canister.

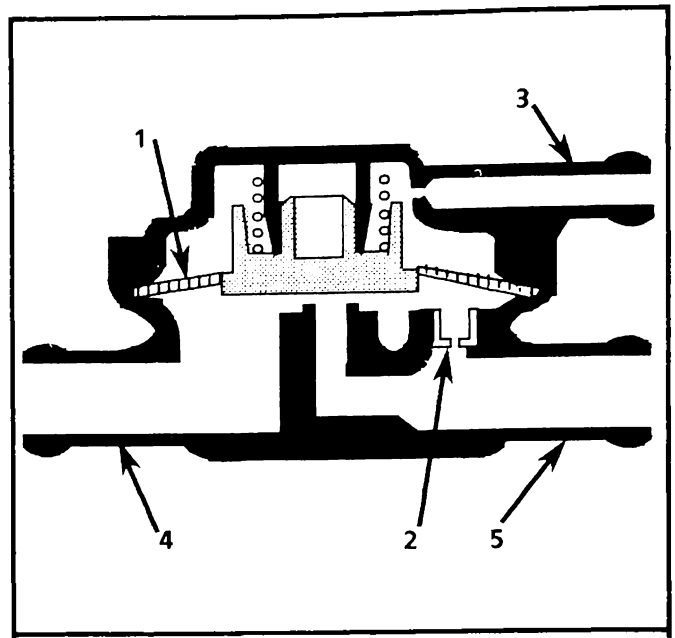

1 DIAPHRAGM
2 VENT RESTRICTION
3 CONTROL VACUUM TUBE
4 TUBE TO FUEL TANK
5 TUBE TO CANISTER

10-1-85
*6S 2971-6E

Figure C3-2 Fuel Tank Pressure Control Valve

FUNCTIONAL TEST

Fuel Vapor Canister Purge Valve

Apply a short length of hose to the lower tube of purge valve, and attempt to blow through it. Little or no air should pass into the canister. (A small amount of air will pass if the fuel vapor canister has a constant purge hole).

With hand vacuum pump, apply vacuum 51 kPa (15" Hg) through the control valve tube (upper tube). The diaphragm should hold vacuum for at least 20 seconds, if not, the canister must be replaced. If the diaphragm holds vacuum, again try to blow through the hose connected to the lower tube while vacuum is still being applied. An increased flow of air should be observed, if not, the fuel vapor canister must be replaced.

Fuel Tank Pressure Control Valve

With a hand vacuum pump apply vacuum 51 kPa (15" Hg) to the control vacuum tube. The diaphragm should hold vacuum for at least 20 seconds. If it does not hold vacuum the diaphragm is leaking and the valve must be replaced.

With the vacuum still applied to the control vacuum tube, apply a short hose to the valve's tank tube side, blow into the tube. You should feel the air pass through the valve. If the air does not pass through, the valve should be replaced.

ON-CAR SERVICE

FUEL VAPOR CANISTER

Remove or Disconnect

1. MAF Sensor
2. Hoses from fuel vapor canister. Mark hoses to install on new fuel vapor canister.
3. Two canister hold down bolts.
4. Fuel Vapor Canister.

Install or Connect

1. Fuel vapor canister as removed.
2. Two canister hold down bolts.
3. Hoses. Make sure connections are correct.
4. MAF Sensor

FUEL VAPOR CANISTER HOSES

Refer to Vehicle Emission Control Information label for routing of fuel vapor canister hoses.

PARTS INFORMATION

PART NAME	GROUP
Canister, Fuel Vapor	3.130
Solenoid, Fuel Vapor Canister	3.140
Valve, Fuel Tank Pressure Control	3.140

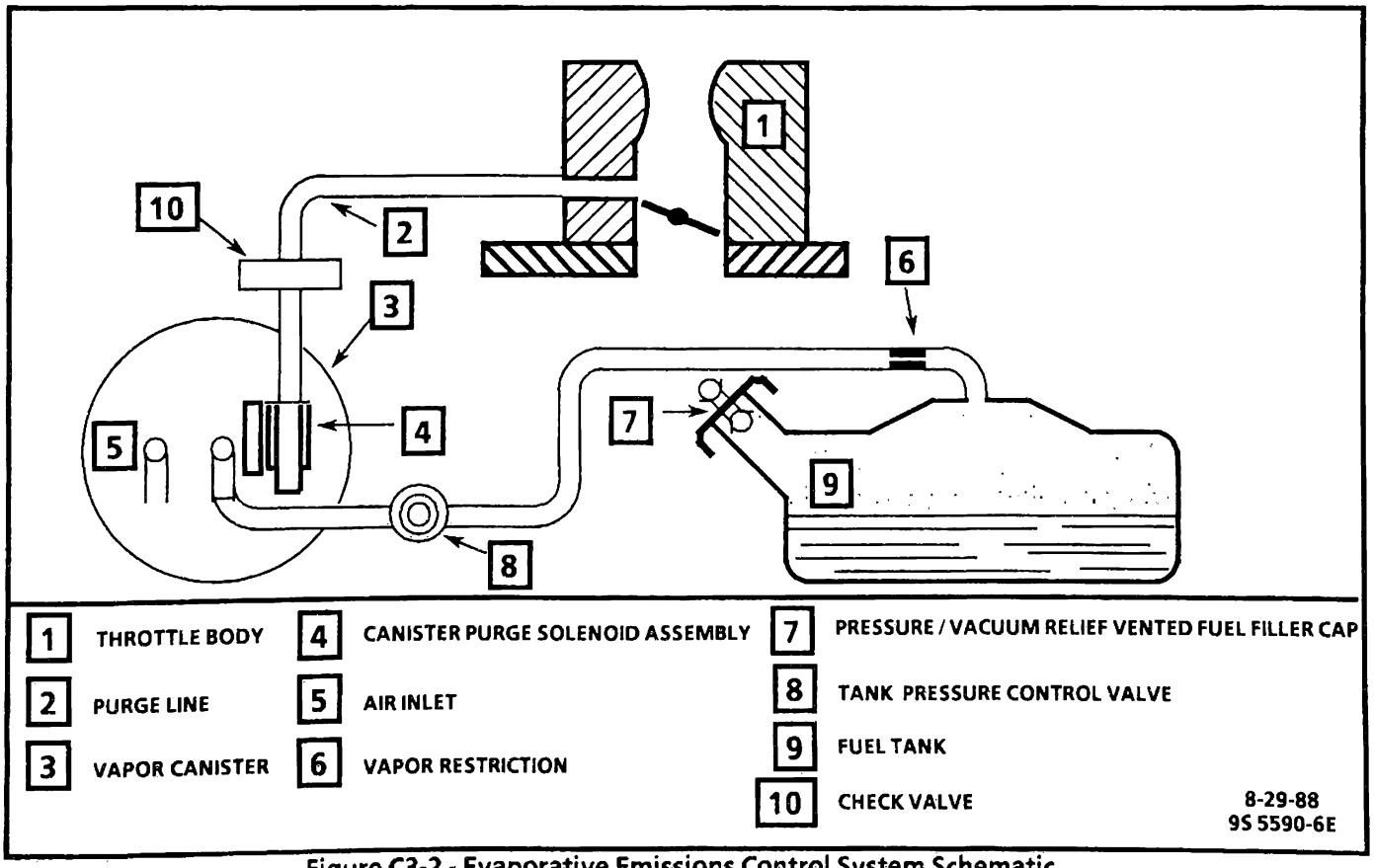

Figure C3-2 - Evaporative Emissions Control System Schematic

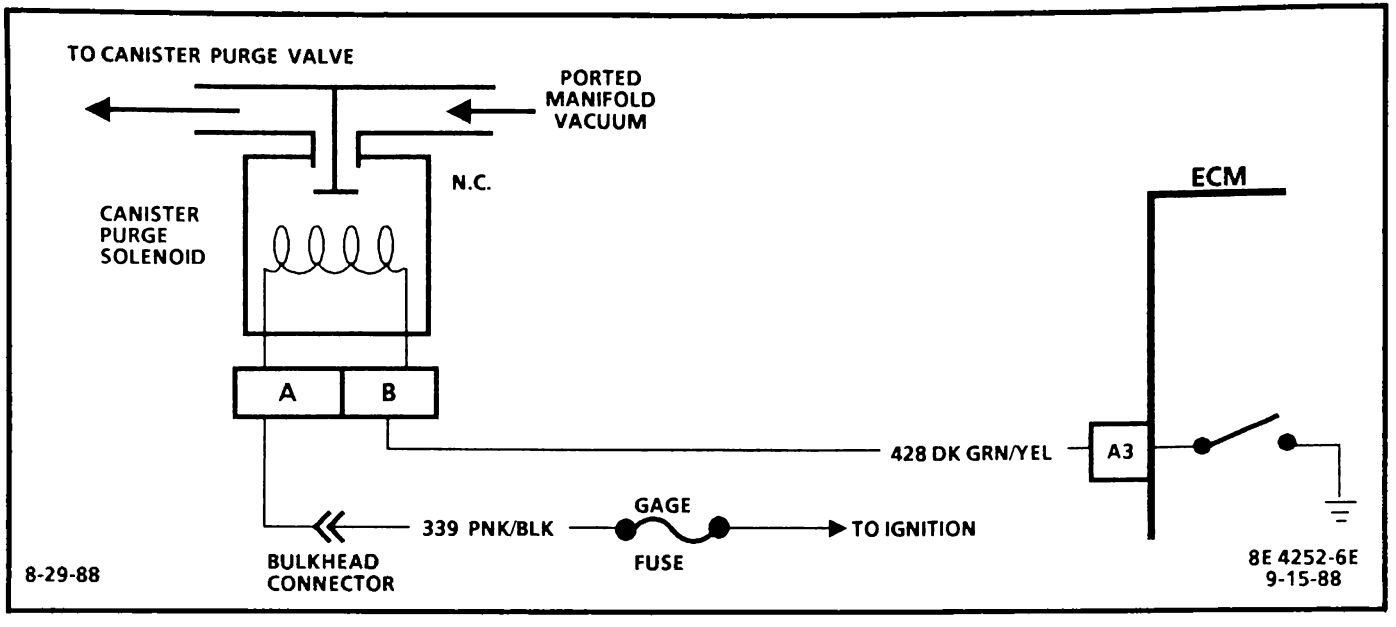

CHART C-3

CANISTER PURGE SOLENOID CHECK
3.8L TURBO "F" CARLINE (PORT)

Circuit Description:

Canister purge is controlled by a solenoid that allows ported manifold vacuum to purge the fuel vapor canister when de-energized. The ECM supplies a ground to energize the solenoid (purge "ON").

If the diagnostic "test" terminal is grounded, with the engine stopped, or the following conditions are met with the engine running, the canister purge solenoid will be energized (purge "ON").

- Engine run time after start more than 1 minute.
- Coolant temperature above 80°C (176°F).
- Vehicle speed above 15 mph.
- Throttle position is above idle.

Test Description: Numbers below refer to circled numbers on the diagnostic chart.

1. The external vacuum source must be applied to the canister purge solenoid at the canister.
2. Grounding the diagnostic "test" terminal will energize the canister purge solenoid and allow vacuum to pass.
3. Some canister purge solenoids may have a large enough bleed built into them to appear to be operating incorrectly.

CHART C-3
CANISTER PURGE SOLENOID CHECK 3.8L TURBO "F" CARLINE (PORT)

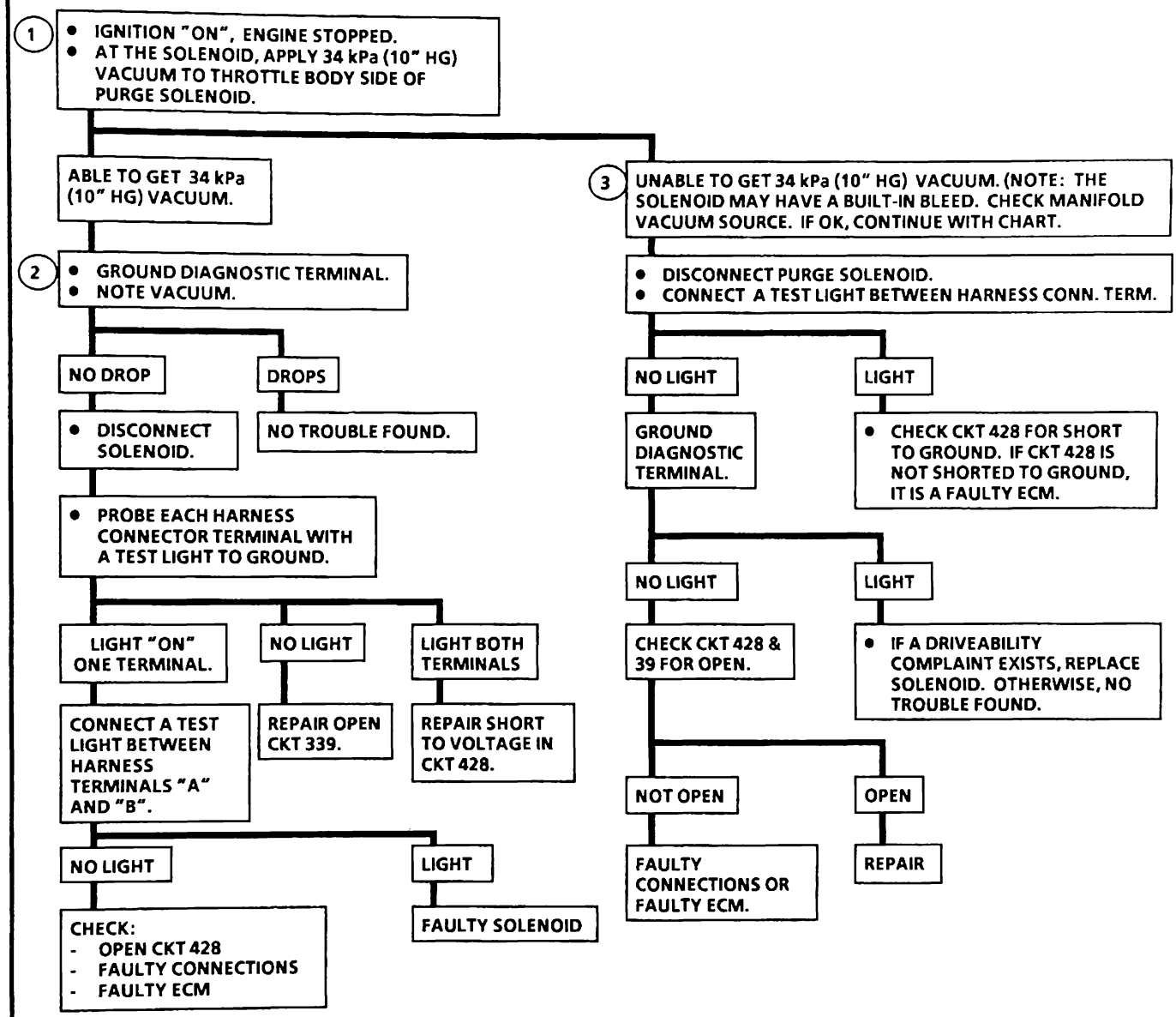

CLEAR CODES AND CONFIRM "CLOSED LOOP" OPERATION AND NO "SERVICE ENGINE SOON" LIGHT.

9-15-88
8E 4691-6E

SECTION C4

IGNITION SYSTEM/EST (DISTRIBUTORLESS C3I) 3.8L TURBO "F" CARLINE (PORT)

CONTENTS

GENERAL DESCRIPTION C4-1
SYSTEM COMPONENTS C4-2
Ignition Coil C4-2
C3I Module C4-2
Camshaft Sensor C4-2
Crankshaft Sensor C4-2
Electronic Control Module (ECM) C4-3
Electronic Spark Control (ESC) C4-4
Electronic Spark Timing (EST) C4-4
DIAGNOSIS C4-4
ON-CAR SERVICE C4-5
IGNITION COIL C4-5
C3I MODULE C4-5
CRANKSHAFT SENSOR C4-5
CAMSHAFT SENSOR C4-6
CAMSHAFT SENSOR DRIVE ASSEMBLY .. C4-6
CAMSHAFT SENSOR TIMING C4-6
PARTS INFORMATION C4-7

GENERAL DESCRIPTION

The Computer Controlled Coil Ignition System (C3I) is an ignition system that does not use the conventional distributor and coil. The ignition system consists of three ignition coils, a (C3I) ignition module, Camshaft Sensor, and Crankshaft Sensor as well as the related connecting wires and the EST (Electronic Spark Timing) portion of the ECM.

A distributorless ignition system, such as this one, uses a "waste spark" method of spark distribution. Each cylinder is paired with the cylinder that is opposite it (1-4, 2-5, 3-6). The spark occurs simultaneously in the cylinder coming up on the compression stroke and in the cylinder coming up on the exhaust stroke.

The cylinder on the exhaust stroke requires very little of the available energy to fire the spark plug. The remaining energy will be used as required by the cylinder on the compression stroke. The same process is repeated when the cylinders reverse roles.

It is possible for one plug to fire even though the spark plug lead from the same coil is disconnected from the other spark plug. The disconnected spark plug lead acts as one plate of a capacitor, with the engine being the other plate. These two "capacitor plates" are charged as a current surge (spark) jumps across the gap of the connected spark plug. The "plates" are then discharged as the secondary energy is dissipated in an oscillating current across the gap of the spark plug still connected. Because of the direction of current flow in the primary winding and thus in the secondary winding, one plug will fire from the center electrode to the side electrode while the other will fire from side electrode to center electrode.

These systems utilize the EST signal from the ECM, as do distributor ignition systems equipped with EST, to control spark timing.

Under 400 rpm, the C3I module controls spark timing and the ECM operates the injectors in the simultaneous mode. Over 400 rpm, the ECM controls spark timing (EST) and the injectors operate in the Sequential Fuel Injection mode (SFI).

Ignition timing is calculated and controlled by the ECM using the following inputs:

- Crankshaft position
- Camshaft position
- Engine speed (rpm)
- Engine coolant temperature (CTS) and Manifold Air Temperature. (MAT)
- Amount of air entering the intake (MAF)
- Throttle position (TPS)
- ESC signal (Knock Retard)
- Park/Neutral state (P/N)
- Vehicle speed (VSS)

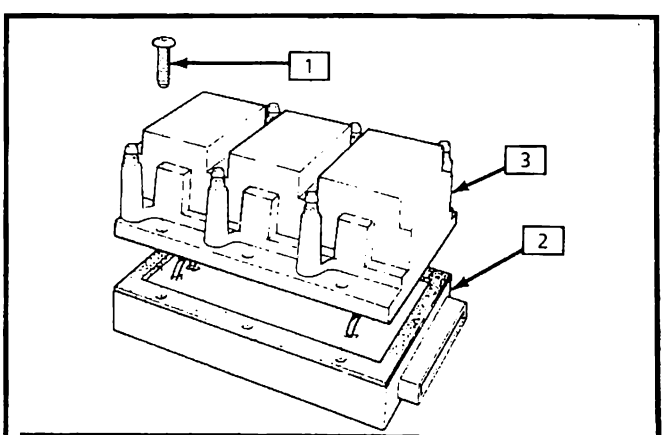

1 TORX SCREWS (6) 3 N·m (27 lb. in.)
2 C3I MODULE
3 IGNITION COIL ASSEMBLY

7S 3611-6E

Figure C4-1 - Ignition Coil and Module

SYSTEM COMPONENTS

Ignition Coil

Three twin tower ignition coils are combined into a single coil pack unit. This unit is mounted to the C3I module (Figure C4-1). Each coil provides the spark for two plugs simultaneously (waste spark distribution), however all three coils must be replaced as a unit.

C3I Module

The Ignition Module monitors the Camshaft Sensor and the Crankshaft Sensor signals. This information is transmitted to the ECM so that correct spark and fuel injector timing can be maintained during all driving conditions. During cranking, it monitors the Cam Signal or "sync pulse" to begin the ignition firing sequence. Below 400 rpm, the module controls spark advance by triggering each of the three coils at a pre-determined interval based on engine speed only. Above 400 rpm, the ECM controls the spark timing (EST) and compensates for all driving conditions. The C3I module must receive a Cam and then a Crank Signal in that order to enable the engine to start.

The C3I module is not repairable. When a module is replaced, the coil(s) must be transferred to the new module (See Figure C4-1).

Camshaft Sensor

The Camshaft Sensor (Figure C4-2) is located on the timing cover behind the water pump, near the camshaft sprocket. The Camshaft Sensor is operated by a interrupter shaft which is driven by the camshaft (Figure C4-3).

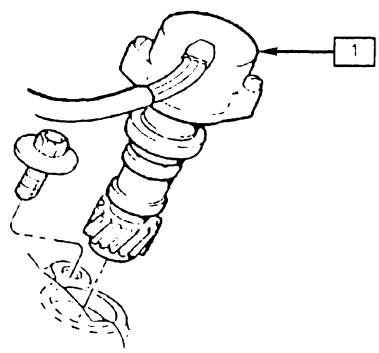

1 CAMSHAFT SENSOR ASSEMBLY

9S 5742-6E

Figure C4-2 - Camshaft Sensor

The Camshaft Sensor is activated as the interrupter rotates with its cam driven shaft and passes between the magnet and "hall-effect" switch. When the "hall-effect" switch is activated, it grounds the signal line to the C3I module, pulling the Crank Signal line's applied voltage low. This is interpreted as a Cam Signal. Because of the way the signal is created, by the Crank Sensor, the signal circuit is always either at a high or low voltage (square wave signal). While the camshaft sprocket continues to turn, the "hall-effect" switch turns off as the magnetic field passes the Camshaft Sensor resulting in one signal each time the camshaft makes one revolution. The Cam Signal is created as piston #1 and #4 reach approximately 25° after top dead center. It is then used by the C3I module to begin the ignition coil firing sequence starting with the #3/6 coil. The firing sequence begins with this coil because piston #6 is now at the correct position in the compression stroke for the spark plugs to be fired. This Cam Signal, which actually represents camshaft position due to the sensor's mounting location, is also used by the ECM to properly time its Sequential Fuel Injection operation.

Both the Crankshaft Sensor and Camshaft Sensor signals must be received by the C3I module for the engine to start. When the Cam Signal is not received from the C3I module by the ECM Terminal "A-11", fuel injection is simultaneous rather than sequentially timed and a Code 41 will be set.

If a Code 41 is present and the engine will start and run, the fault is in CKT 951. The C3I module or the ECM and the C3I module will determine the ignition timing. If the fault is in the Camshaft Sensor Circuit, the Camshaft Sensor or the Cam Signal portion of the C3I module, Code 41 may also be present but the engine will not start, since the C3I module cannot determine the position of the number one piston.

Crankshaft Sensor

The Crankshaft Sensor (Figure C4-4) is mounted in a pedestal on the front of the engine near the harmonic balancer. The Crankshaft sensor is a "hall-effect" switch which depends on a metal interrupter ring, mounted on the balancer (Figure C4-5), to activate it. Windows in the interrupter activate the "hall-effect" switch as they provide a path for the magnetic field between the switch's transducer and its magnet. When the "hall-effect" switch is activated, it grounds the Crank Signal line to the C3I module, pulling the Crank Signal line's applied voltage low, which is interpreted as a Crank Signal.

Because of the way the signal by the Crankshaft Sensor is created, the signal circuit is always either at a high or low voltage (square wave signal) and three signal pulses are created during each crankshaft revolution. This signal issued by the C3I module to create a Reference Signal which is also a "square wave" signal similar to the crank signal. The Reference Signal is used to calculate engine rpm and crankshaft position by the ECM. A misadjusted Crankshaft Sensor or bent interrupter ring could cause rubbing of the Crankshaft Sensor resulting in potential driveability problems such as rough idle, poor performance or a no start condition.

NOTICE: Failure to have the correct clearance will damage the Crankshaft Sensor.

The Crankshaft Sensor is not adjustable for ignition timing but positioning of the interrupter ring is very important. A clearance of .025 of an inch is required on either side of the interrupter ring.

A Crankshaft Sensor that is damaged due to mispositioning or a bent interrupter ring, can result in a hesitation, sag, stumble, or dieseling condition. To determine if the Crankshaft Sensor could be at fault, "Scan" engine rpm, while driving the vehicle. An erratic display indicates that a proper reference pulse has not been received by the ECM, which may be the result of a malfunctioning Crankshaft Sensor.

Electronic Control Module (ECM)

The ECM is responsible for maintaining proper spark and fuel injection timing for all driving conditions.

To provide optimum driveability and emissions, the ECM monitors input signals from the following components in calculating Electronic Spark Timing (EST):

- Ignition Module (C3I)
- Coolant Temperature Sensor (CTS)
- Manifold Air Temperature Sensor (MAT)
- Mass Air Flow Sensor (MAF)
- Park/Neutral Switch (P/N)
- ESC Module
- Throttle Position Sensor (TPS)
- Vehicle Speed Sensor (VSS)

Under 400 rpm, the ECM will start injector timing (simultaneous) as soon as the C3I module receives a Cam Signal, synchronizes the spark and produces a Reference Signal for the ECM to calculate the fuel ignition timing. The C3I module controls the spark timing during this period. Over 400 rpm, the ECM controls Electronic Spark timing (EST) and changes the mode of fuel injection to sequential, providing a Cam Signal is received.

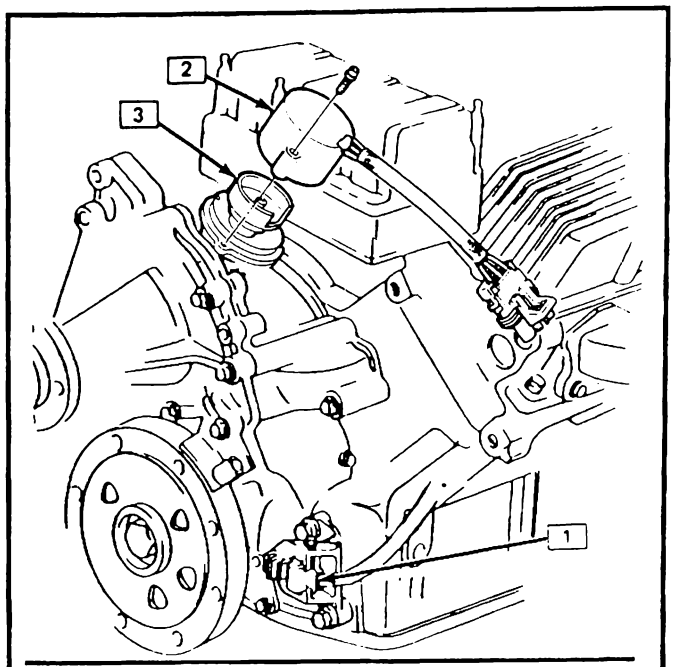

1 CRANKSHAFT SENSOR
2 CAMSHAFT POSITION SENSOR
3 CAMSHAFT SENSOR INTERRUPTER & SHAFT ASSEMBLY

4S 0981-6EA

Figure C4-3 - Camshaft and Crankshaft Sensors

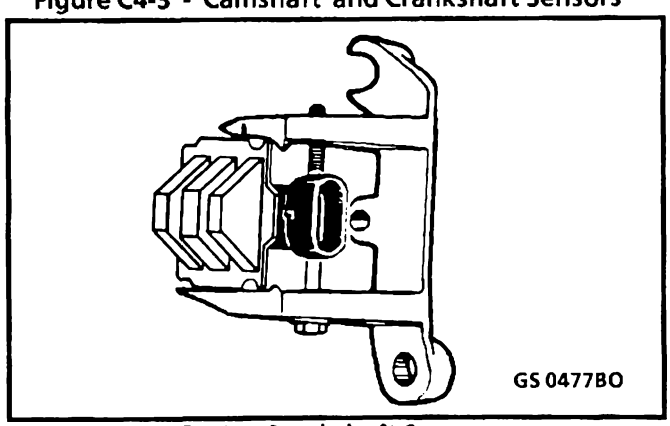

C4-4 - Crankshaft Sensor

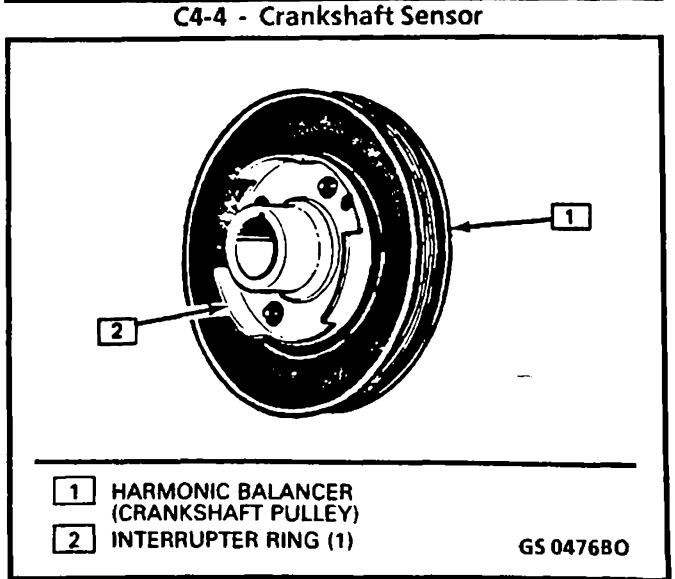

C4-5 - Harmonic Balancer

Electronic Spark Control (ESC)

The ESC system is comprised of a Detonation (knock) Sensor and an ESC module. The ECM monitors the ESC signal CKT 457 to determine when engine detonation occurs.

As long as the ESC module is sending a voltage signal (8 to 10 volts) to the ECM (no detonation detected by the ESC sensor) the ECM provides normal spark advance.

When the Detonation (knock) Sensor detects detonation, the ESC module turns "OFF" the circuit to the ECM and the voltage at ECM terminal "B7" drops to 0 volts. The ECM then retards EST to reduce detonation. Retarded timing can also be a result of excessive valve lifter, pushrod or other mechanical engine or transmission noise.

Electronic Spark Timing (EST)

This system uses the same EST to ECM circuits that distributor type ignition systems with EST use. Following is a brief description for each of the EST circuits and the Cam Signal CKT (630).

- Reference (CKT 430)
  This provides the ECM with rpm and crankshaft position information from the C³I module. The C³I module receives the signal from the Crank Sensor's "hall-effect" switch. (See Crankshaft Sensor).
  This Crank Signal will either be high or low depending on the position of the interrupter ring. This high-low signal is used to trigger the C³I module for ignition operation and by the ECM to calculate fuel injection timing. Both the Camshaft and Crankshaft Sensor signals must be received by the C³I module in order for a Reference Signal to be produced on CKT 430. A loss of the Reference Signal would prevent the engine from running.
- ByPass (CKT 424)
  At about 400 rpm, the ECM applies 5 volts to this circuit to switch spark timing control from the C³I module to the ECM.
  An open or grounded bypass circuit will set a Code 42 and result in the engine operating in a back-up ignition timing mode (module timing) at a calculated timing value. This may cause poor performance and reduced fuel economy.
- EST (CKT 423)
  The C³I module sends a reference signal to the ECM when the engine is cranking. While the engine is under 400 rpm, the C³I module controls the ignition timing. When the engine speed exceeds 400 rpm, the ECM applies 5 volts to the bypass line to switch the timing to ECM control (EST).
  An open or ground in the EST circuit will stall the engine and set a Code 42. The engine can be restarted but will operate in a back-up ignition timing mode (module timing) at a calculated timing value. This may cause poor performance and reduced fuel economy.
- Cam Signal (CKT 630)
  The ECM uses Cam Signal to determine the position of the #1 piston on it's compression stroke. This signal is used by the ECM to calculate the sequential fuel injection (SFI) mode of operation. A loss of this signal will set a Code 41. If the Cam signal is lost while the engine is running the fuel injection system will shift to the simultaneous injection mode of operation, and the engine will continue to run. The engine can be restarted but will continue to run in the simultaneous mode as long as the fault is present.

DIAGNOSIS

If the engine "Cranks But Will Not Run" or immediately stalls, CHART A-3 must be used to determine if the failure is in the C³I system or the fuel system.

If either a Code 41 or 42 is set, the appropriate Trouble Code Chart must be used for diagnosis.

If the symptom is "Engine Miss" and the C³I system is suspected, CHART C-4A or C-4B will provide a systematic diagnostic procedure.

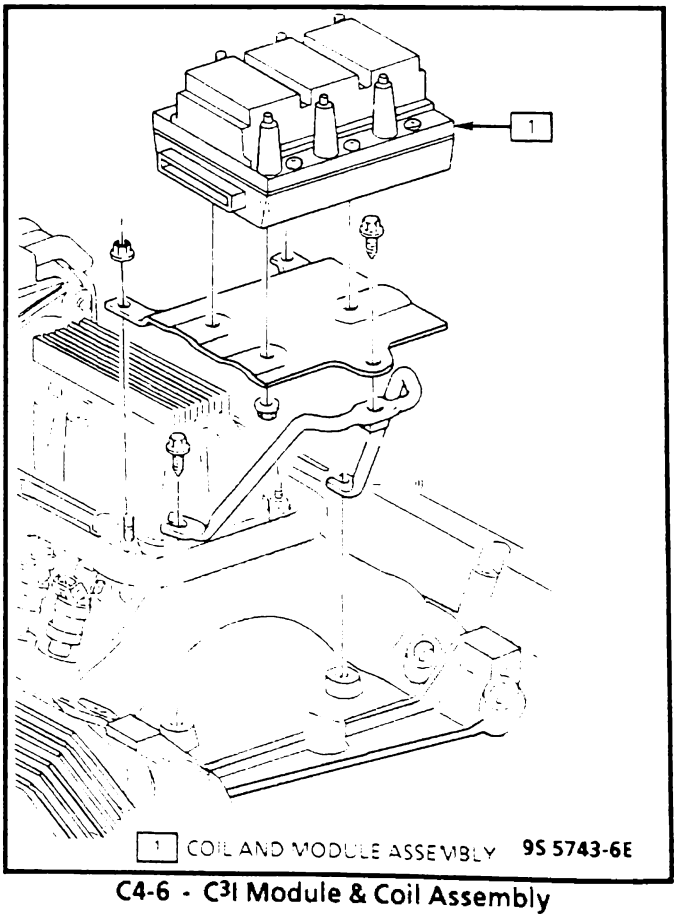

C4-6 - C³I Module & Coil Assembly

ON-CAR SERVICE

IGNITION COIL

Remove or Disconnect

1. Negative battery cable.
2. Spark plug wires.
3. 6 torx screws securing coil to ignition module.
4. Tilt coil assembly back.
5. Coil to module connectors.
6. Coil assembly.

Install or Connect

1. Coil assembly and connectors.

Tighten

- 6 torx screws torque to 3N.m (27 lb. in.)

2. Spark plug wires
3. Negative battery cable
4. Note lead colors or mark for reassembly.

C3I MODULE

Remove or Disconnect

1. Negative battery cable.
2. 14-way connector at ignition module.
3. Spark plug wires at coil assembly.
4. Nuts and washers (4) securing ignition module assembly to bracket.
5. 6 torx screws securing coil assembly to ignition module.
6. Disconnect connectors between coil and ignition module.
7. Note lead colors or mark for reassembly.
8. Ignition module.

Install or Connect

1. Coil and connectors to ignition module.

Tighten

- 6 torx screws torque to 3N·m (27 lb. in.)

2. Nuts and washers securing assembly to bracket.
3. Spark plug wires at coil assembly.
4. 14-way connector to module.
5. Negative battery cable

CRANKSHAFT SENSOR

Remove or Disconnect

1. Disconnect Crankshaft Sensor harness connector.
2. Rotate the harmonic balancer, using a 28mm socket and pull handle, until any window in the interrupter is aligned with the crank sensor.
3. Loosen the pinch bolt on the sensor pedestal until the sensor is free to slide in the pedestal.
4. Remove the pedestal to engine mounting bolts.
5. While manipulating the sensor within the pedestal, carefully remove the sensor and pedestal as a unit.

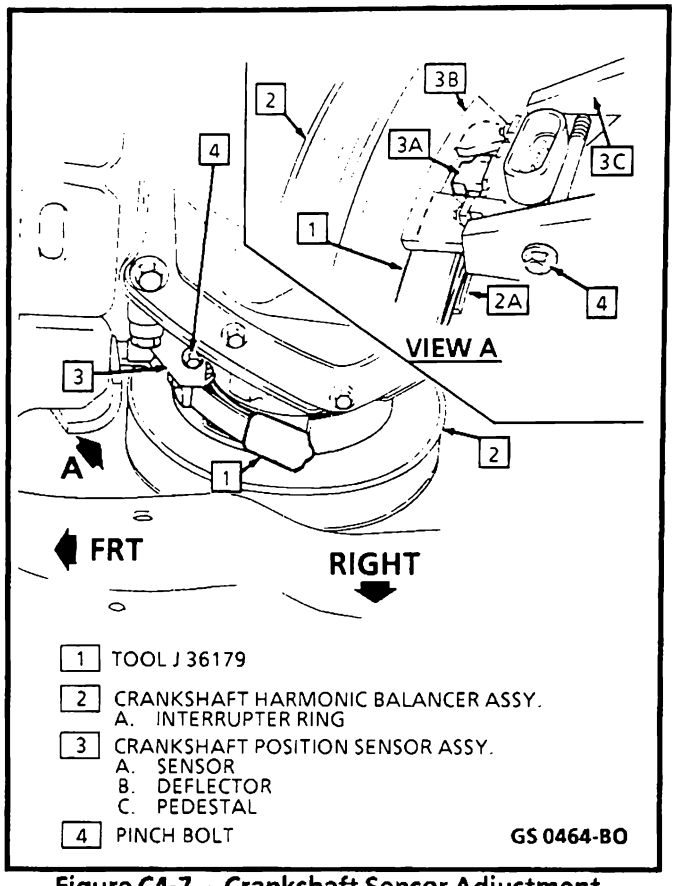

Figure C4-7 - Crankshaft Sensor Adjustment

Install or Connect

1. Loosen the pinch bolt on the new sensor pedestal until the sensor is free to slide in the pedestal.
2. Verify that the window in the interrupter is still properly positioned and install sensor and pedestal as a unit while making sure that the interrupter ring is aligned within the proper slot.
3. Install pedestal to engine mounting bolts and torque to 30 N·m (22 lbs. ft).

Inspect

1. Rotate harmonic balancer, using a 28mm socket and pull handle, until the interrupter ring(s) fills the sensor slot(s) and edge of interrupter window is aligned with edge of the deflector on the pedestal.
2. Insert adjustment tool (J36179 or equivalent) into the gap between sensor and interrupter on each side of interrupter ring. If gage will not slide past sensor on either side of interrupter ring, the sensor is out of adjustment or interrupter ring is bent. This clearance should be checked at three positions around the outer interruptor ring, approximately 120° apart. (NOTE: If found out of adjustment, the sensor should be removed and inspected for potential damage.

Adjust

1. Loosen the pinch bolt on sensor pedestal and insert adjustment tool (J-36179 or equivalent) into the gap between sensor and interrupter on each side of interrupter ring. (Figure C4-7)
2. Make sure that interrupter is sandwiched between blades of adjustment tool and both blades are properly inserted into sensor slot.
3. Torque sensor retaining pinch bolt to 3.4 N·m (30 lbs. in) while maintaining light pressure on sensor against gage and interrupter ring. This clearance should be checked again, at three positions around the interrupter ring, approximately 120° apart. If interrupter ring contacts sensor at any point during harmonic balancer rotation, the interrupter ring has excessive runout and must be replaced.

CAMSHAFT SENSOR

If only the Camshaft Sensor needs replacing, it is not necessary to remove the entire drive assembly from the engine. The sensor is replaceable separately.

Remove or Disconnect

1. Negative battery cable.
2. Sensor 3-way connector.
3. Two screws securing sensor.
4. Sensor.

Install or Connect

1. Position sensor as removed.
2. Two screws securing sensor.
3. Sensor 3-way connector.
4. Negative battery cable.

CAMSHAFT SENSOR ASSEMBLY

Remove or Disconnect

1. Follow steps 1-4 of Camshaft Sensor removal procedure.
2. Note position of slot in rotating vane.
3. Bolt securing drive assembly in engine. (Figure C4-2)
4. Camshaft Sensor assembly.

Install or Connect

1. The Camshaft Sensor assembly with the rotating vane slot facing the power steering pump (toward the drivers side of engine) when installed in the engine with #1 cylinder T.D.C. on the compression stroke.
2. Install bolt and washer.
3. Install sensor onto drive assembly and tighten both attaching screws.
4. Time Camshaft Sensor using the following procedure:

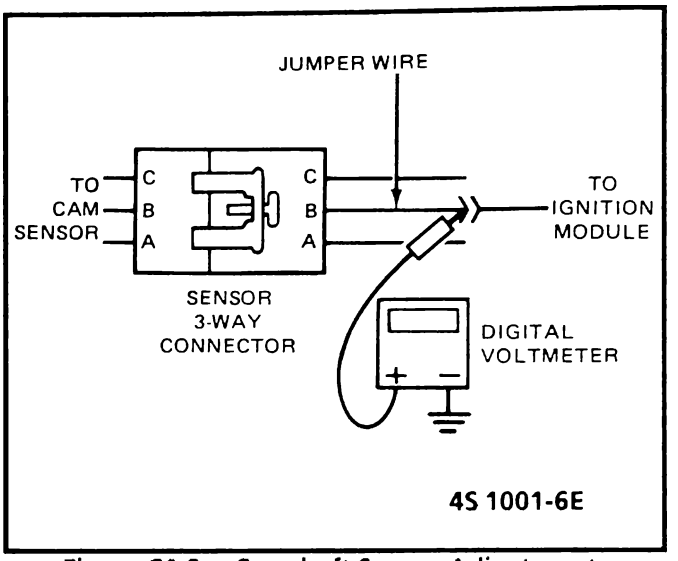

Figure C4-8 - Camshaft Sensor Adjustment

CAMSHAFT SENSOR TIMING

Adjust

This adjustment does not effect spark timing.

1. Remove #1 spark plug and rotate engine until #1 cylinder comes up on compression stroke.
2. Mark harmonic balancer and rotate engine to 25° after T.D.C.
3. Remove plug wires from coil assembly.
4. Using weatherpack removal tool J-28742-A or equivalent, remove Terminal "B" of sensor 3-way connector on the module side.
5. Probe terminal B of 3-way connector by installing a jumper into "B" and reconnecting wire removed to jumper wire.
6. Connect a voltmeter between jumper wire and ground. See Figure C4-8.
7. Key on, engine "OFF".
8. Rotate camshaft sensor counterclockwise until the sensor switch just closes. This is indicated by the voltage reading going from high 5-12 volts to a low voltage 0-2 volts. The low voltage indicates the switch is closed.
9. Tighten retaining bolt.
10. Reinstall plug wires and plug.
11. Remove jumper wire and reinstall wire into Terminal "B".

PARTS INFORMATION

PART NAME	GROUP
Sensor, Crankshaft Position	2.383
Pulley, Engine Crankshaft	0.646
Coil, Ignition	2.170
Module, Ignition	2.170
Sensor, Camshaft Position	2.381
Magnet, Cam Sensor (On Cam Sprocket)	2.383
Gasket, Ignition Module and Coil	2.170
Sensor, With Drive, Camshaft Position	2.381
O-ring, On Camshaft Sensor Shaft	2.363
Screw, Camshaft Sensor Cap	8.906
Screw, Coil to Ignition Module	8.906

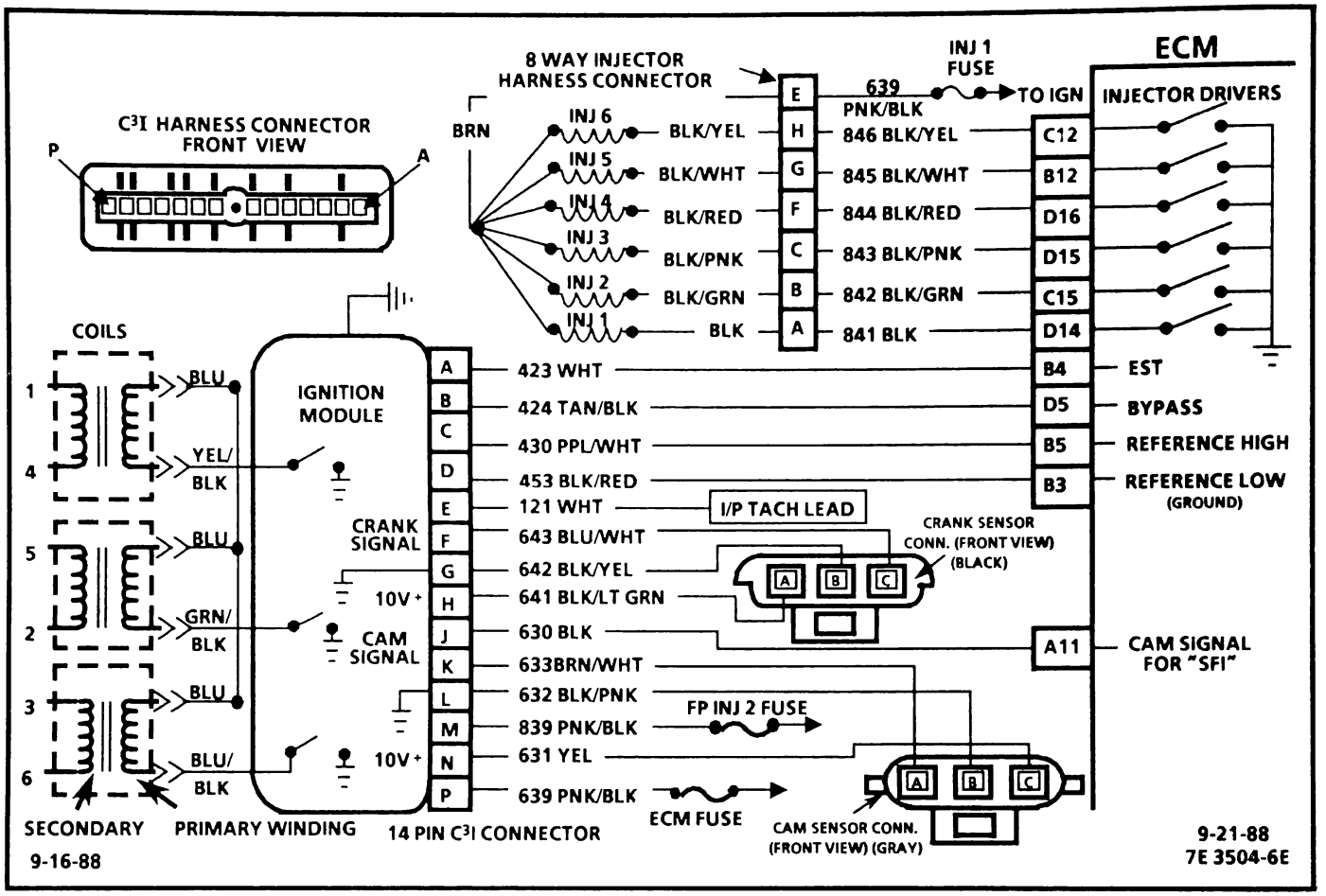

CHART C-4A

C3I MISFIRE AT IDLE
3.8L TURBO "F" CARLINE (PORT)

Circuit Description:

The C3I uses a waste spark method of spark distribution. In this type of ignition system the ignition module triggers the #1/4 coil pair resulting in both #1 and #4 spark plugs firing at the same time. #1 cylinder is on the compression stroke at the same time #4 is on the exhaust stroke, resulting in a lower energy requirement to fire #4 spark plug. This leaves the remaining high voltage to fire #1 spark plug.

Test Description: Numbers below refer to circled numbers on the diagnostic chart.

1. If the "misfire" complaint exists under load only, the diagnostic Chart C-4B must be used. Engine rpm should drop approximately equally on all plug leads.
2. A spark tester, such as a (ST-125) J-26792 or equivalent, must be used because it is essential to verify adequate available secondary voltage at the spark plug. (25,000 volts.).
3. If ignition coils are carbon tracked, the coil tower spark plug wire nipples may be damaged.
4. By checking the secondary resistance, a coil with an open secondary may be located.
5. By switching a normally operating coil into the position of the malfunctioning one, a determination can be made as to fault being the coil or C3I module.

CHART C-4A

C31 MISFIRE AT IDLE
3.8L TURBO "F" CARLINE (PORT)

1
- IF ENGINE MISFIRES UNDER LOAD ONLY, SEE CHART C-4B.
- ENGINE IDLING AT NORMAL OPERATING TEMPERATURE, DISCONNECT IAC.
- MOMENTARILY DISCONNECT EACH INJECTOR CONNECTOR, WHILE OBSERVING ENGINE RPM.
- ALL INJECTOR(S) SHOULD RESULT IN AN RPM DROP. DOES IT?

YES → SEE "ROUGH, UNSTABLE OR INCORRECT IDLE OR STALLING" IN SYMPTOMS SECTION "B".

NO
- IGNITION "OFF", INSTALL INJECTOR TESTER J34730-2 OR EQUIVALENT ON INJECTOR CONNECTOR WHICH DID NOT RESULT IN AN RPM DROP. CRANK ENGINE. LIGHT SHOULD BLINK. DOES IT?

NO
- KEY "ON", ENGINE "OFF".
- WITH TEST LIGHT TO GROUND TOUCH CONNECTOR TO BRN WIRE. LIGHT SHOULD LIGHT. DOES IT?

YES → REPAIR OPEN IN CKT TO ECM DRIVER FOR PROBLEM INJECTOR.

NO → REPAIR OPEN IN BRN WIRE TO PROBLEM INJECTOR.

YES

2
- IGNITION "OFF", INSTALL SPARK TESTER (ST-125) J-26792 OR EQUIVALENT ON PLUG LEAD(S) WHICH DID NOT RESULT IN RPM DROP (1,3,5 AT PLUG AND 2,4,6 AT COIL).
- SPARK SHOULD JUMP TESTER GAP WHILE CRANKING ENGINE. DOES IT?

YES → CHECK FOR;
- FAULTY, WORN OR CRACKED SPARK PLUG(S)
- PLUG FOULING DUE TO ENGINE MECHANICAL FAULT.

IF SPARK PLUGS CHECK OUT OK, SEE "CUTS OUT, MISSES" IN SYMPTOMS SECTION "B".

NO
- CHECK THE RESISTANCE OF PLUG WIRE WHICH DID NOT FIRE THE SPARK TESTER.
- WIRE RESISTANCE SHOULD BE LESS THAN 30,000 OHMS EACH AND WIRES SHOULD NOT BE GROUNDED. ARE WIRES OK?

YES

3
- REMOVE COIL FROM MODULE
- INSPECT COILS, PLUG WIRE AND PLUG WIRE NIPPLES, THEY SHOULD BE FREE OF CARBON TRACKING. ARE THEY?

NO → REPLACE FAULTY WIRE (S)

YES

4
- CHECK SECONDARY COIL RESISTANCE. SHOULD BE 10-13K OHMS RESISTANCE.

NO → REPLACE FAULTY COMPONENT.

YES

5
- INSTALL A KNOWN GOOD COIL.
- SPARK SHOULD JUMP TESTER GAP AT PROBLEM CYLINDER WITH ENGINE IDLING. DID IT?

NO → REPLACE COIL

YES → ORIGINAL IGNITION COIL IS FAULTY

NO → FAULTY C31 MODULE

CLEAR CODES AND CONFIRM "CLOSED LOOP" OPERATION AND NO "SERVICE ENGINE SOON" LIGHT.

9-16-88
7E 3766-6E

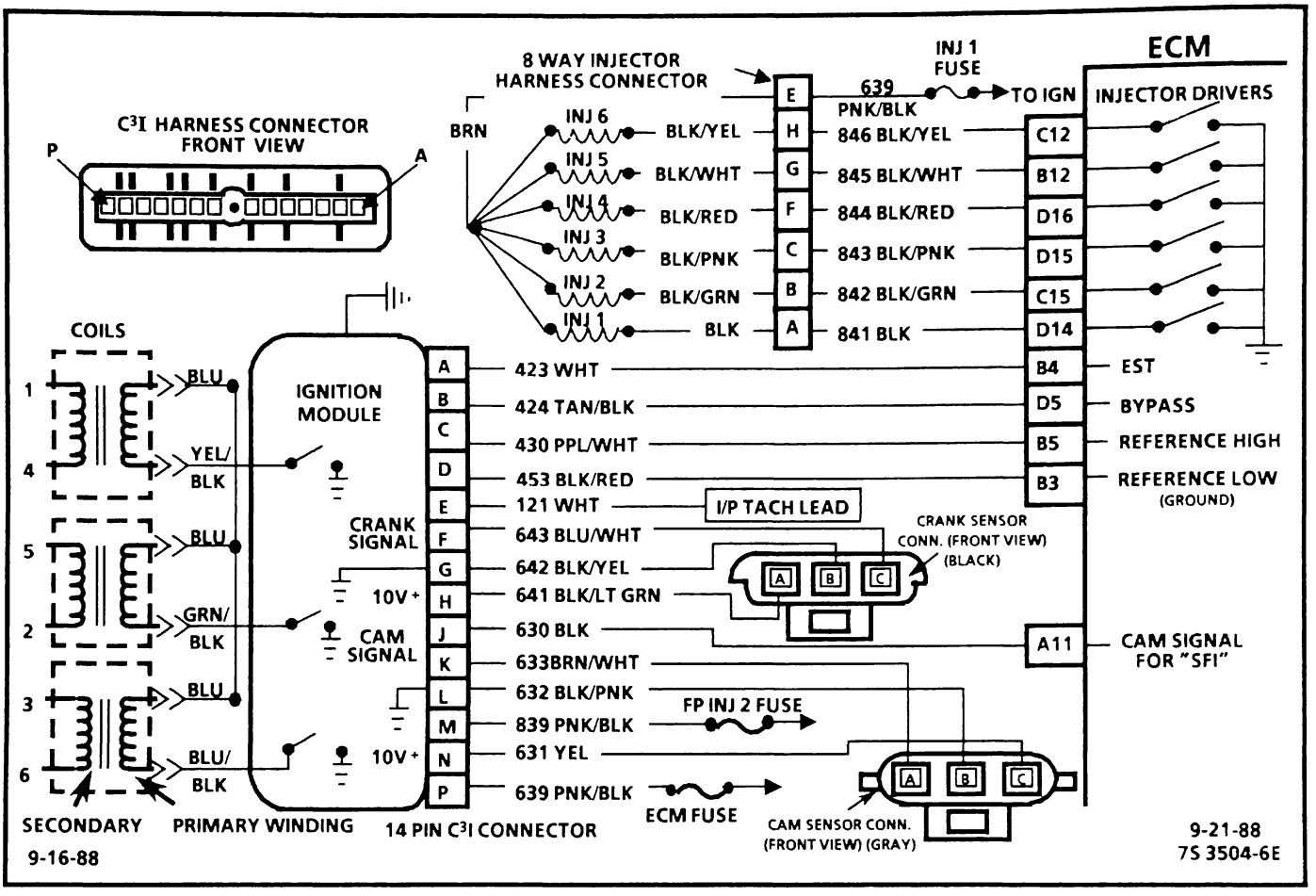

CHART C-4B

C3I MISFIRE UNDER LOAD
3.8L TURBO "F" CARLINE (PORT)

Circuit Description:

The C3I uses a waste spark method of spark distribution. In this type of ignition system the ignition module triggers the #1/4 coil pair resulting in both #1 and #4 spark plugs firing at the same time. #1 cylinder is on the compression stroke at the same time #4 is on the exhaust stroke, resulting in a lower energy requirement to fire #4 spark plug. This leaves the remaining high voltage to fire #1 spark plug.

Test Description: Numbers below refer to circled numbers on the diagnostic chart.

1. If the "misfire" complaint exists at idle only, the diagnostic Chart C-4A must be used.
2. A spark tester, such as a (ST-125) J-26792 or equivalent, must be used because it is essential to verify adequate available secondary voltage at the spark plug. (25,000 volts). Spark should jump the tester gap on all 6 leads. This simulates a "load" condition.
3. If ignition coils are carbon tracked, the coil tower spark plug wire nipples may be damaged.
4. By installing a normally operating coil, a determination can be made as to fault being the coil or C3I module.

CHART C-4B

C3I MISFIRE UNDER LOAD
3.8L TURBO "F" CARLINE (PORT)

1

- IF ENGINE MISFIRES AT IDLE ONLY, SEE CHART C-4A.
- ENGINE IDLING AT NORMAL OPERATING TEMPERATURE, DISCONNECT IAC.
- MOMENTARILY DISCONNECT EACH INJECTOR CONNECTOR, WHILE OBSERVING ENGINE RPM.
- ALL INJECTOR(S) SHOULD RESULT IN AN RPM DROP. DOES IT?

NO

- IGNITION "OFF", INSTALL INJECTOR TESTER J 3470-2 OR EQUIVALENT ON INJECTOR CONNECTOR WHICH DID NOT RESULT IN AN RPM DROP.
- LIGHT SHOULD "BLINK" WHILE CRANKING ENGINE. DID IT?

YES

CHECK FOR;
- FAULTY, WORN OR CRACKED SPARK PLUG(S)
- PLUG FOULING DUE TO ENGINE MECHANICAL FAULT.

IF SPARK PLUGS CHECK OUT OK, SEE "CUTS OUT, MISSES" IN SYMPTOMS SECTION "B".

YES

2

- IGNITION "OFF", INSTALL SPARK TESTER (ST-125) J-26792 OR EQUIVALENT ON PLUG LEAD(S) WHICH DID NOT RESULT IN RPM DROP (1,3,5 AT PLUG AND 2,4,6 AT COIL).
- SPARK SHOULD JUMP TESTER GAP WHILE CRANKING ENGINE. DOES IT?

NO

- KEY "ON", ENGINE "OFF".
- WITH TEST LIGHT TO GROUND TOUCH CONNECTOR TO BRN WIRE. LIGHT SHOULD LIGHT. DOES IT?

YES

REPAIR OPEN IN CKT TO ECM DRIVER FOR PROBLEM INJECTOR.

NO

REPAIR OPEN IN BRN WIRE TO PROBLEM INJECTOR.

NO

- CHECK THE RESISTANCE OF PLUG WIRE WHICH DID NOT FIRE THE SPARK TESTER.
- WIRE RESISTANCE SHOULD BE LESS THAN 30,000 OHMS AND SHOULD NOT BE GROUNDED. ARE WIRES OK?

YES

REPLACE THE SPARK PLUG FOR THE LEAD WHICH WAS CONNECTED TO SPARK TESTER (ST-125) J26792 OR EQUIVALENT. IS MISFIRE STILL PRESENT? START MISFIRE TEST AGAIN AT STEP #1..

YES

3

- REMOVE COIL FROM MODULE
- INSPECT COILS, PLUG WIRES AND PLUG WIRE NIPPLES. THEY SHOULD BE FREE OF CARBON TRACKING. ARE THEY?

NO

REPLACE FAULTY WIRE (S)

YES

- CHECK SECONDARY COIL RESISTANCE. SHOULD BE 10-13K OHMS RESISTANCE.

NO

REPLACE FAULTY COMPONENT.

YES

4

- INSTALL A KNOWN GOOD COIL.
- SPARK SHOULD JUMP TESTER GAP AT PROBLEM CYLINDER WITH ENGINE IDLING. DID IT?

NO

REPLACE COIL

YES

ORIGINAL IGNITION COIL IS FAULTY

NO

FAULTY C31 MODULE

CLEAR CODES AND CONFIRM "CLOSED LOOP" OPERATION AND NO "SERVICE ENGINE SOON" LIGHT.

10-5-88
7E 3767-6E

SECTION C5

ELECTRONIC SPARK CONTROL (ESC) SYSTEM

CONTENTS

GENERAL DESCRIPTION C5-1
PURPOSE C5-1
OPERATION C5-1
DIAGNOSIS C5-1
ON-CAR SERVICE C5-1
ESC KNOCKSENSOR C5-1
ESC MODULE C5-2
PARTS INFORMATION C5-2

GENERAL DESCRIPTION

PURPOSE

Varying octane levels can cause excessive detonation (spark knock) under certain load conditions. To aid in controlling combustion detonation, an Electronic Spark Control (ESC) system is used. This system is designed to retard spark timing, if necessary, to reduce spark knock in the engine. This allows the engine to use maximum spark advance to improve driveability and fuel economy.

OPERATION

The ESC system has two major components:

- ESC module
- ESC knock sensor

The ESC knock sensor detects abnormal vibration (spark knocking) in the engine. The knock sensor is mounted in the engine block near the cylinders. The ESC module receives the knock sensor information and sends a signal to the ECM. The ECM then adjusts the Electronic Spark Timing (EST) to reduce spark knocking.

The ESC module sends a voltage signal (8 to 10 volts) to the ECM when no spark knock is detected by the knock sensor, and the ECM provides normal spark advance.

When the knock sensor detects spark knock, the module turns "OFF" CKT 457 to the ECM. The ECM then retards EST to reduce spark knock.

Loss of the ESC knock sensor signal or loss of ground at ESC module terminal "D" would cause the signal on CKT 457 to the ECM to remain high. This condition would cause the ECM to control EST as if no spark knock was occuring. No retard would occur, and spark knock could become severe under heavy engine load conditions. This condition should, however, cause a Code 43 to set.

Loss of the ESC signal to the ECM would cause the ECM to constantly retard EST. This could result in sluggish performance and cause a Code 43 to set.

DIAGNOSIS

Code 43 indicates that the ECM terminal "B7" is receiving less than 6 volts for a 4 second period with the engine running. This is CKT 457, which normally provides a 8 to 10 volts signal from the ESC module to the ECM. See Code 43 CHART for diagnosis if the code is present.

When no Code 43 is present but the ESC system is a potential cause of excessive spark knock, see CHART C-5 which follows.

"Scan" tools have two positions to diagnose the ESC system. The "Knock Signal" can be monitored to determine if the knock sensor is detecting a knock condition and if the ESC module is functioning. The "Knock Retard" position on a "Scan" displays the amount of spark retard the ECM is commanding.

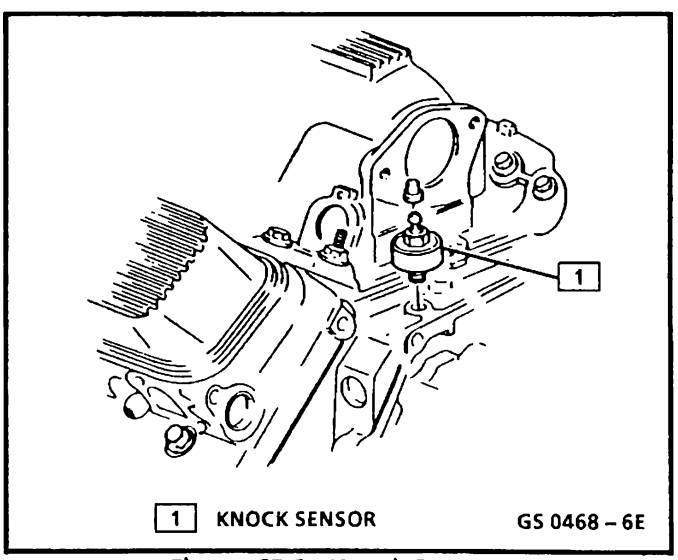

Figure C5-2 - Knock Sensor

ON-CAR SERVICE

ESC KNOCK SENSOR

Remove or Disconnect

1. Negative battery cable.
2. C_3I module and coil assembly and bracket.
3. ESC wiring harness connector from sensor.
4. Sensor from engine block.

Install or Connect

1. Sensor into engine block.

NOTICE: Do Not apply thread sealant to sensor threads. Sensor is coated at factory and applying additional sealant will affect the sensors ability to detect detonation.

Tighten

- Knock sensor to 19 N·m (14 lbs. ft.)

2. Wiring harness connector to the sensor.
3. C_3I module and coil assembly and bracket.
4. Negative battery cable.

ESC MODULE

Remove or Disconnect

1. ESC module connector.
2. Fuel pump relay from multi-use bracket.
3. ESC module attaching screws.
4. ESC module.

Install or Connect

1. ESC module.
2. ESC module attaching screws.
3. Fuel pump relay.
4. ESC module connector.

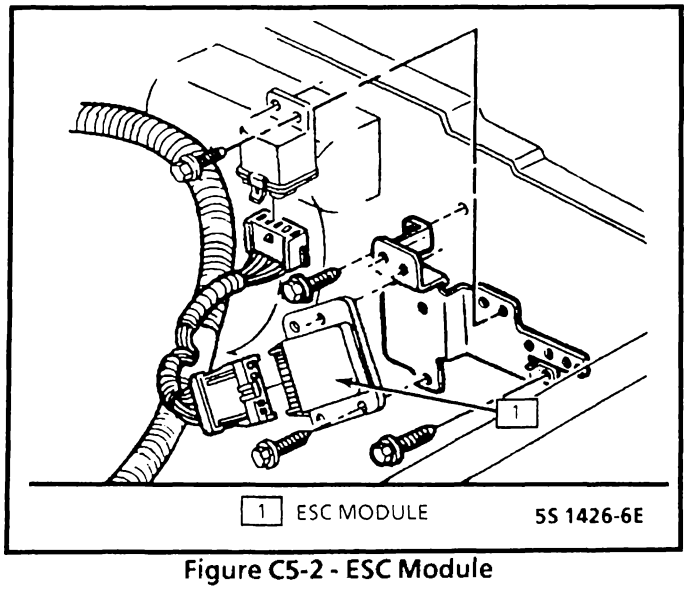

Figure C5-2 - ESC Module

PARTS INFORMATION

PART NAME	GROUP
Sensor, ESC Detonation	3.682
Module, Elect. Spark Cont	2.383
Bracket, Elect. Spark Cont Module	2.383

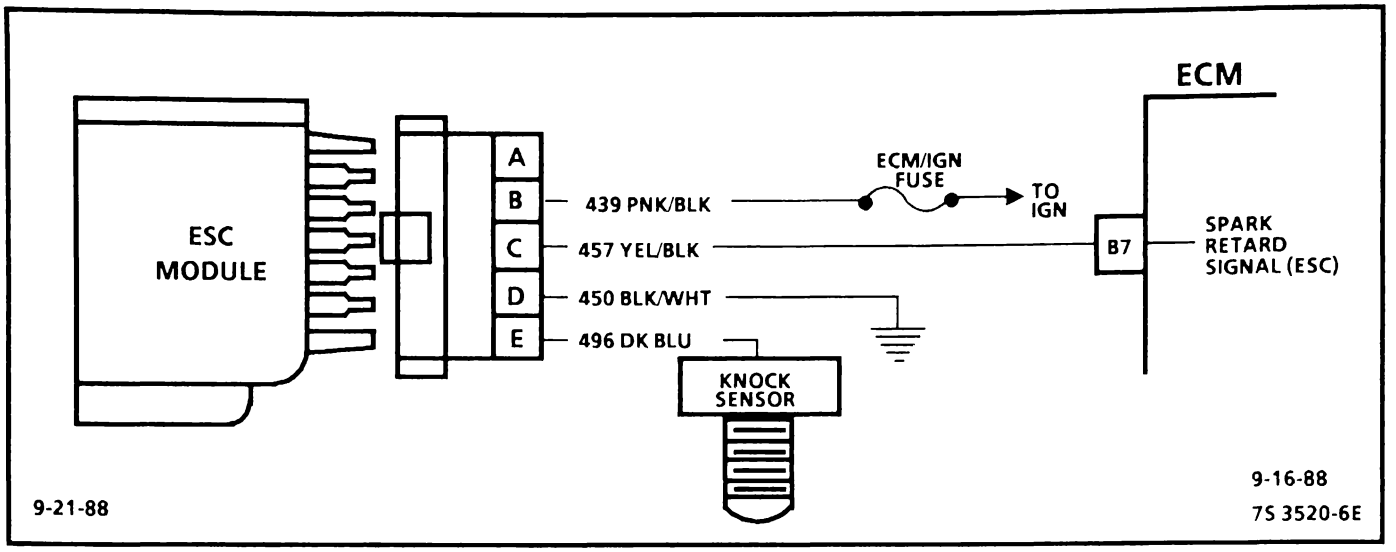

CHART C-5

ELECTRONIC SPARK CONTROL (ESC) SYSTEM CHECK 3.8L TURBO "F" CARLINE (PORT)

Circuit Description:

The ESC system is comprised of a knock sensor and an ESC module. As long as the ESC module is sending a voltage signal (8 to 10 volts) to the ECM (no detonation detected by the ESC sensor) the ECM provides normal spark advance. When the sensor detects detonation, the module turns "OFF" the circuit to the ECM and the voltage at ECM terminal "B7" drops to 0 volts. The ECM retards EST to reduce detonation.

A loss of the knock sensor signal or a loss of ground at ESC module would cause the signal at the ECM to remain high. This condition would result in the ECM controlling EST as if no detonation were occuring. The EST would not be retarded, and detonation could become severe enough under heavy engine load conditions to result in pre-ignition and potential engine damage.

Loss of the ESC signal to the ECM would cause the ECM to constantly retard EST. This could result in sluggish performance and cause a Code 43 to set.

Test Description: Numbers refer to circled numbers on the diagnostic chart.

1. Tests ESC system's ability to detect detonation and retard the ignition timing.
2. By disconnecting the ESC module, the ECM monitors a low voltage at terminal "B7" and should retard the ignition timing.
3. After approximately 4 seconds, the "Service Engine Soon" light will come "ON" and Code 43 will be stored.
4. Checks for proper voltage output (measured on A/C scale) of knock sensor. Low or no voltage would indicate an open circuit to terminal "E" or faulty sensor.
5. Checks to see if constant retard is due to a faulty knock sensor or module, or if a false voltage signal is being transmitted on the wire from the knock sensor by induction from an adjacent wire, such as a spark plug wire, ignition wire, etc. Reroute wires as necessary.

CHART C-5

ELECTRONIC SPARK CONTROL (ESC) SYSTEM CHECK 3.8L TURBO "F" CARLINE (PORT)

1
- CHECK FOR OVERHEATING, EGR MALFUNCTION, MECHANICAL ENGINE NOISE, ETC. PRIOR TO USING THIS CHART.
- "SCAN" KNOCK SIGNAL.
- ENGINE RUNNING ABOUT 1500 RPM AND AT NORMAL OPERATING TEMPERATURE.
- TRANSMISSION IN PARK OR NEUTRAL.
- TAP ENGINE BLOCK IN AREA OF KNOCK SENSOR AND CHECK FOR RPM DROP AND NOTE DISPLAY .
- DISPLAYED KNOCK SIGNAL SHOULD CHANGE AND ENGINE SPEED SHOULD DECREASE. DID THEY?

NO → FROM CODE 43 CHART

YES → SYSTEM IS FUNCTIONING PROPERLY.

2
- "SCAN" RPM.
- RUN ENGINE AT ABOUT 1500 RPM AND DISCONNECT ESC MODULE.
- DISPLAYED RPM SHOULD DECREASE. DID IT?

NO

YES

3
- EXIT DIAGNOSTICS.
- "SES" LIGHT SHOULD COME "ON" AFTER 4 SECONDS. DID IT?

NO

YES

4
- IGNITION "ON", ENGINE STOPPED.
- CHECK VOLTAGE FROM ESC HARNESS TERMINAL "C" TO GROUND.
- VOLTAGE SHOULD BE LESS THAN 2 VOLTS. IS IT?

YES

NO

5
- CHECK VOLTAGE AT ECM TERMINAL "B-7".
- VOLTAGE SHOULD BE LESS THAN 2 VOLTS. IS IT?

YES → POOR CONNECTION AT ECM TERM. "B-7" OR FAULTY ECM.

NO → CKT 457 IS SHORTED TO VOLTAGE.

NO → OPEN CKT 457.

YES
- IGNITION "OFF", REMOVE TERMINAL "E" FROM ESC MOD. CONNECTOR .
- INSTALL A JUMPER WIRE INTO TERM."E" CONNECTOR CAVITY AND CONNECT TO SENSOR LEAD.
- WITH ENGINE RUNNING 1800 RPM , DISCONNECT JUMPER WIRE.
- DISPLAYED ENGINE RPM SHOULD INCREASE. DID IT?

YES → ROUTING OF KNOCK SENSOR LEAD IS TOO CLOSE TO HIGH CURRENT LEADS OR KNOCK SENSOR IS FAULTY.

NO → POOR CONNECTION OR FAULTY ESC MODULE

YES
- ENGINE AT 2000 RPM PLACE DVM SELECTOR IN AC VOLTS POSITION.
- CHECK VOLTAGE BETWEEN ESC HARNESS TERMS. "E" AND "D".
- VOLTAGE SHOULD BE OVER 80 mV (.080 VOLTS) AC AT 2000 RPM ± 100 RPM. IS IT?

NO → CHECK CKT 496 FOR OPEN OR SHORT TO GROUND, AND CKT 450 FOR OPEN. IF CIRCUITS ARE OK, IT'S FAULTY SENSOR CONNECTION OR SENSOR.

YES → FAULTY ESC CONNECTION OR MODULE .

CLEAR ALL CODES AND CONFIRM "CLOSED LOOP" OPERATION AND NO "SERVICE ENGINE SOON" LIGHT

SECTION C7

EXHAUST GAS RECIRCULATION (EGR) SYSTEM

CONTENTS

GENERAL DESCRIPTION C7-1
PURPOSE C7-1
OPERATION C7-1
EGR CONTROL C7-1
EGR VALVE IDENTIFICATION C7-1
PORT EGR VALVE C7-2
DIAGNOSIS C7-2
RESULTS OF INCORRECT OPERATION C7-2
ON-CAR SERVICE C7-2
EGR VALVE C7-2
EGR CONTROL SOLENOID C7-3
EGR FILTER REPLACEMENT C7-3
PARTS INFORMATION C7-3

GENERAL DESCRIPTION

PURPOSE

The Exhaust Gas Recirculation (EGR) system is used to lower NOx (oxides of nitrogen) emission levels caused by high combustion temperature. It does this by decreasing combustion temperature.

The main element of the system is the EGR valve operated by vacuum and mounted on the intake manifold.

The EGR valve feeds small amounts of exhaust gas back into the combustion chamber as shown in Figure C7-1.

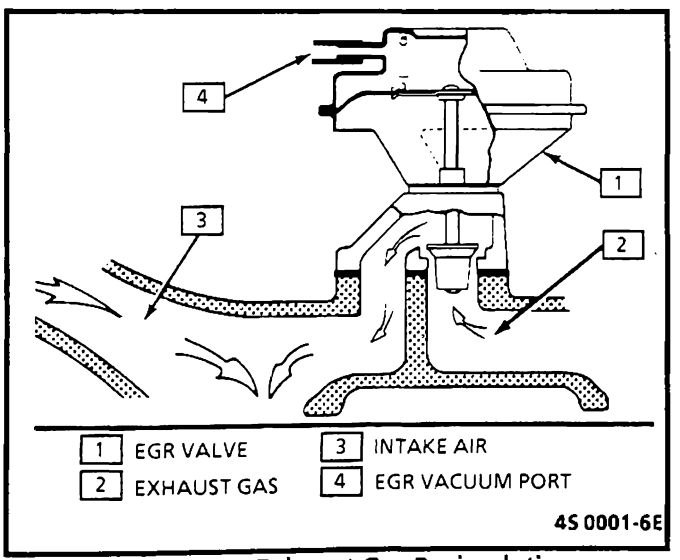

Figure C7-1 - Exhaust Gas Recirculation

OPERATION

The EGR valve is opened by ported manifold vacuum to let exhaust gas flow into the intake manifold. The exhaust gas then moves with the air/fuel mixture into the combustion chamber. If too much exhaust gas enters, combustion will not occur. For this reason, very little exhaust gas is allowed to pass through the EGR valve, especially at idle. The EGR valve is usually open during warm engine operation and when the vehicle is above idle speed.

EGR CONTROL

To regulate EGR flow, an ECM controlled solenoid is used in the vacuum line. The ECM uses information from the following sensors to regulate the solenoid:

- Coolant temperature (CTS)
- Throttle position (TPS)
- Mass Air Flow (MAF)

The EGR vacuum control has a vacuum solenoid that uses "pulse width modulation" (PWM). This means the ECM turns the solenoid "ON" and "OFF" many times a second and varies the amount of "ON" time ("pulse width") to vary the amount of ported manifold vacuum applied to the EGR valve.

A diagnostic switch is part of the control and monitors vacuum to the EGR valve. This switch will trigger a "Service Engine Soon" light, and set a Code 32 in the event of a vacuum circuit failure.

EGR VALVE IDENTIFICATION

- Port EGR valves have no identification stamped after the part number.
- Negative backpressure EGR valves will have an "N" stamped on the top side of the valve after the part number.
- Positive backpressure EGR valves will have a "P" stamped on the top side of the valve, after the part number.

When replacing an EGR valve, always check for correct part number in the parts catalog or supplemental bulletin.

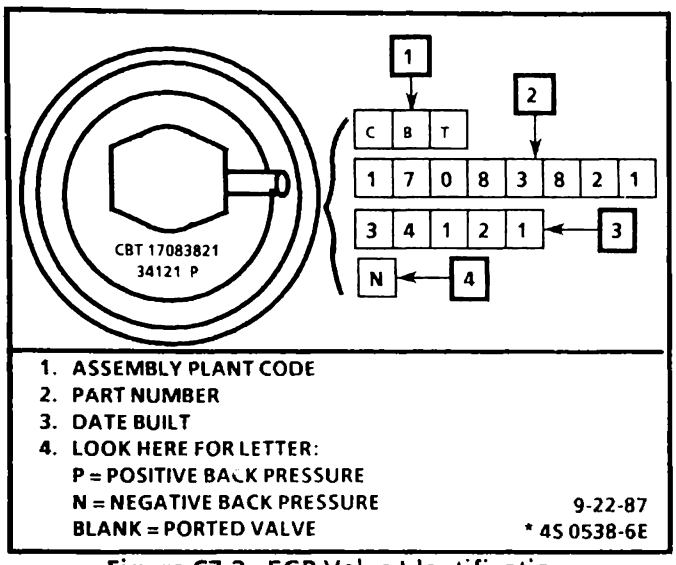

Figure C7-2 - EGR Valve Identification

PORT EGR VALVE

The port EGR valve (Figure C7-3) is controlled by a flexible diaphragm which is spring loaded to hold the valve closed. Ported manifold vacuum applied to the top side of the diaphragm overcomes the spring pressure and opens the valve in the exhaust gas port. This allows exhaust gas to be pulled into the intake manifold and enter the engine cylinders.

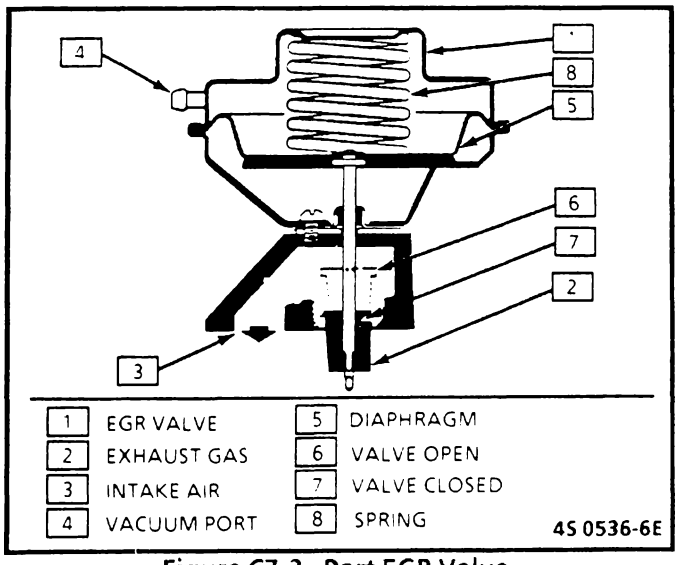

Figure C7-3 - Port EGR Valve

DIAGNOSIS

Diagnosis of the EGR system is covered in CHART C-7 at the end of this section.

RESULTS OF INCORRECT OPERATION

Too much EGR flow at idle, cruise, or cold operation, any of the following conditions may occur:

- Engine stops after cold start.
- Engine stops at idle after deceleration.
- Car surges during cruise.
- Rough idle.

Too little or no EGR flow allows combustion temperatures to get too high. This could cause:

- Spark knock (detonation).
- Engine overheating.
- Emission test failure.

ON-CAR SERVICE

EGR VALVE

Remove or Disconnect

1. EGR valve vacuum tube at valve.
2. Bolts.
3. EGR valve from manifold (Figure C7-4).

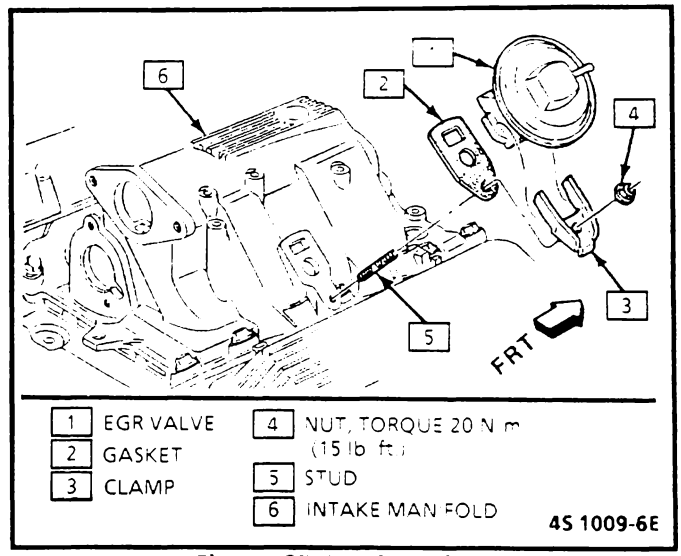

Figure C7-4 - EGR Valve

Inspect

4. EGR Manifold Passage

If EGR passages in the inlet manifold indicate excessive build-up of deposits, the passages should be cleaned. Care should be taken to ensure that all loose particles are completely removed to prevent them from clogging the EGR valve or from being ingested into the engine.

Do not wash EGR valve in solvents or degreaser, permanent damage to valve diaphragm may result. Also, sand blasting of the valve is not recommended since this can affect the operation of the valve.

Clean

5. With a wire wheel, buff the exhaust deposits from the mounting surface and around the valve.

6. Look for exhaust deposits in the valve outlet. Remove deposit build-up with a screwdriver.
7. Clean mounting surfaces of intake manifold and valve assembly.

Install or Connect

1. EGR valve using new gasket.

Tighten

- Bolt to 20 N·m (15 ft. lbs.)

2. Vacuum line to valve.

EGR CONTROL SOLENOID

Remove or Disconnect

1. Negative battery cable.
2. Electrical connector at solenoid (Figure C7-5).
3. Vacuum hoses.
4. Nut and solenoid.

Install or Connect

1. Solenoid and bracket,

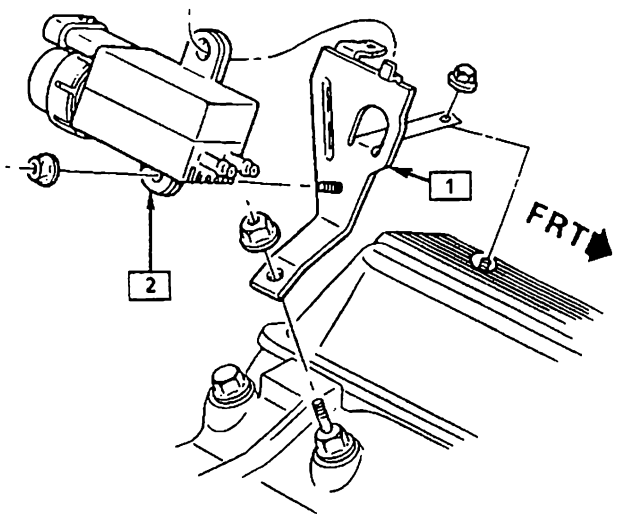

1 BRACKET ASSEMBLY

2 EGR CONTROL SOLENOID

9S 5652-6E

Figure C7-5 - EGR Control Solenoid Location

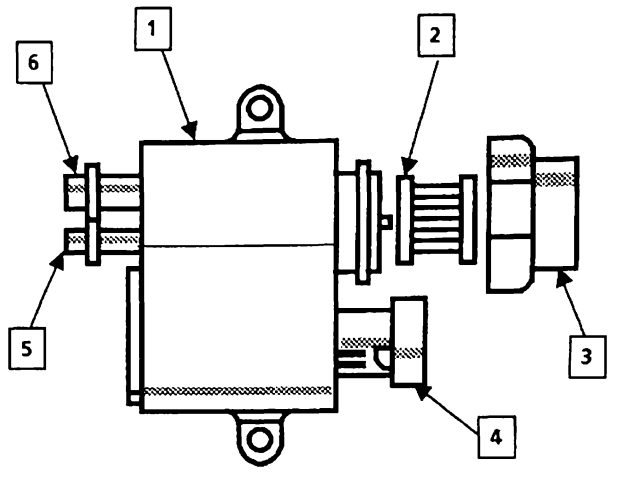

1 EGR CONTROL SOLENOID ASSEMBLY

2 FILTER

3 COVER

4 ELECTRICAL CONNECTOR

5 VACUUM CONNECTOR FROM SOURCE

6 VACUUM CONNECTOR TO EGR VALVE

5-3-85 *6S 2687-6E

Figure C7-6 - EGR Control Solenoid

Tighten

- Nuts to 24N·m (17 ft. lbs.).

2. Vacuum hoses.
3. Electrical connector.
4. Negative battery cable.

EGR FILTER REPLACEMENT

1. Grasp and pull filter off with a rocking motion.
2. Install new filter. (Figure C7-6)

- Push new filter on making sure cut-out for wires is properly aligned.

PARTS INFORMATION

PARTS NAME	GROUP
Valve, EGR	3.670
Gasket, EGR Valve	3.680
Control, EGR Vacuum	3.670

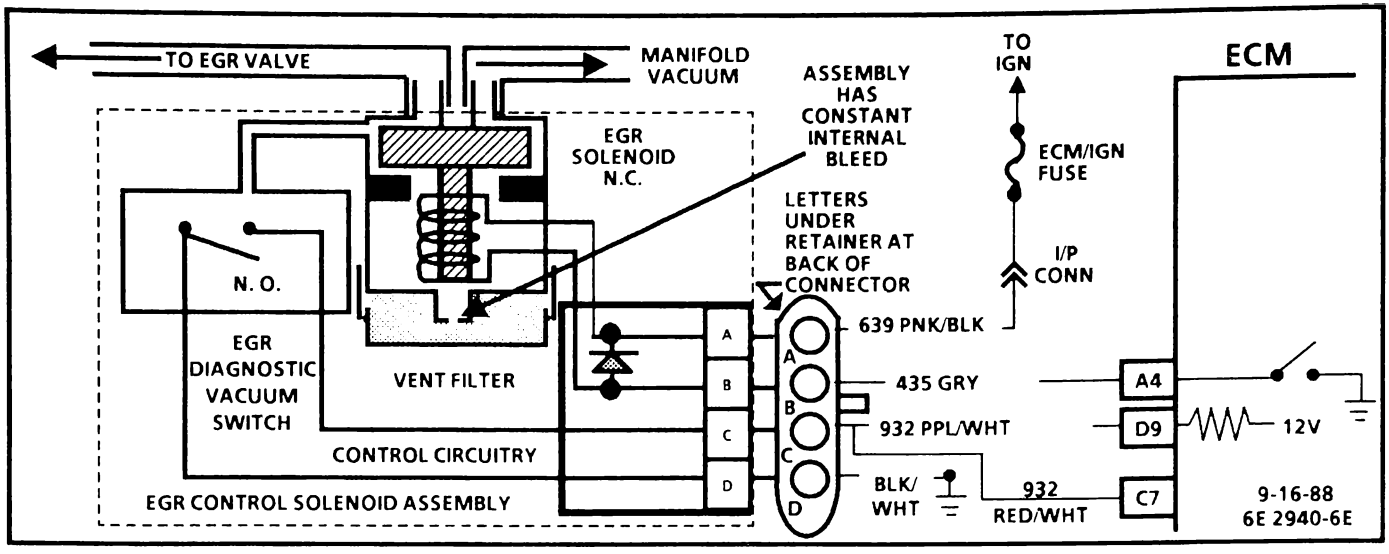

CHART C-7

EXHAUST GAS RECIRCULATION (EGR) CHECK
3.8L TURBO "F" CARLINE (PORT)

Circuit Description:

The Exhaust Gas Recirculation (EGR) valve is opened by ported manifold vacuum, to let exhaust gas flow into the intake manifold. The exhaust gas then moves with the air/fuel mixture into the combustion chamber. If too much exhaust gas enters, combustion will not occur. For this reason, very little exhaust gas is allowed to pass through the valve, especially at idle. The EGR valve is usually open under the following conditions:

- Warm engine operation
- Above idle speed

The amount of exhaust gas recirculated is controlled by variations in vacuum and the EGR vacuum control solenoid.

Test Description: Numbers below refer to circled numbers on the diagnostic chart.

1. Checks for a sticking EGR valve. If sticking, remove and examine valve to determine whether it can be cleaned, or must replaced. A sticking EGR valve will most likely cause a rough idle condition.
2. Checks for plugged EGR passages. If passages are plugged, the engine may have severe detonation on acceleration.

CHART C-7

EXHAUST GAS RECIRCULATION (EGR) CHECK 3.8L TURBO "F" CARLINE (PORT)

ASSUMES NO CODE 32 IS STORED FOR EGR VALVE. MAKE PHYSICAL INSPECTION OF EGR VACUUM HOSE FOR RESTRICTIONS.

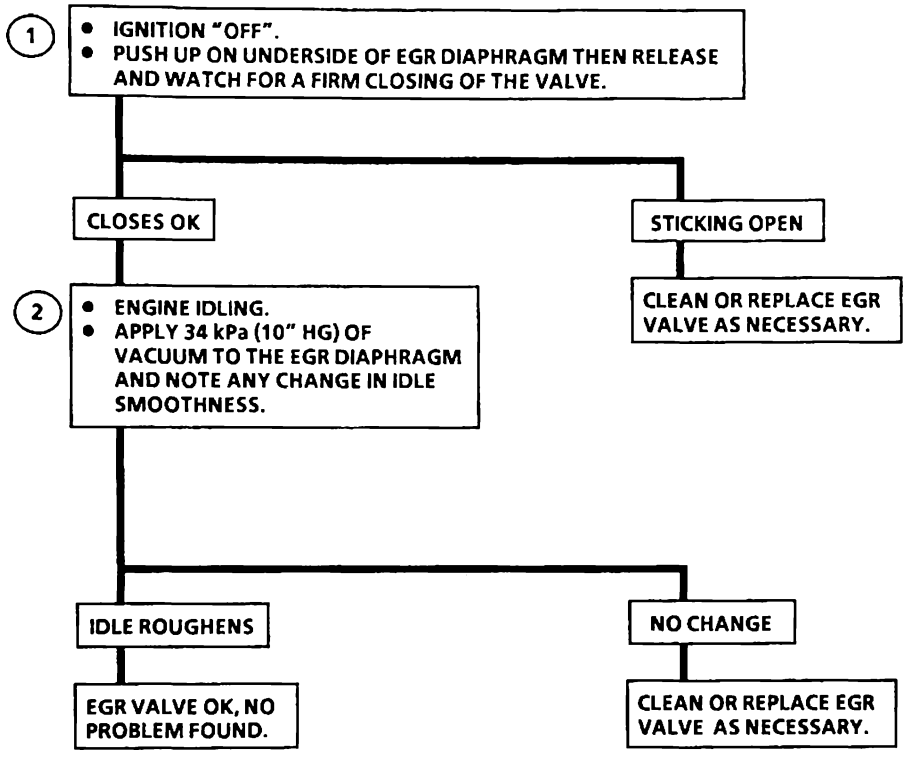

CLEAR CODES AND CONFIRM "CLOSED LOOP" OPERATION AND NO "SERVICE ENGINE SOON" LIGHT.

SECTION C8

TORQUE CONVERTER CLUTCH (TCC) SYSTEM

CONTENTS

GENERAL DESCRIPTION C8-1
PURPOSE C8-1
OPERATION C8-1
Results of Incorrect Operation C8-1
DIAGNOSIS C8-2
ON-CAR SERVICE C8-2
PARTS INFORMATION C8-2

GENERAL DESCRIPTION

PURPOSE

The Torque Converter Clutch (TCC) system uses a solenoid operated valve in the automatic transmission to couple the engine flywheel to the output shaft of the transmission thru the torque converter. This reduces the slippage losses in the converter, increasing fuel economy.

OPERATION

For the Torque Converter Clutch (TCC) to apply, two conditions must be met:

- Internal transmission fluid pressure must be correct. For information on internal transmission operation, see Section "7A". This section will cover only the electrical operation of the TCC system.
- The ECM grounds a switch internally to turn "ON" a solenoid in the transmission. This moves a check ball which will allow the torque converter clutch to apply, if the hydraulic pressure is correct, as described above.

The ECM controls the TCC apply solenoid by looking at several sensors:

- Vehicle Speed Sensor (VSS) Speed must be above a certain value before the clutch can apply.
- Coolant Temperature Sensor (CTS) Engine must be warmed up before clutch can apply.
- Throttle Position Sensor (TPS) After the torque converter clutch applies, the ECM uses the information from the TPS to release the clutch when the car is accelerating or decelerating at a certain rate.
- Gear Switch 200-R4 transmissions use a 3rd & 4th gear switch to send a signal to the ECM telling it which gear the transmission is in. The ECM uses this information to vary the conditions under which the TCC applies or releases.

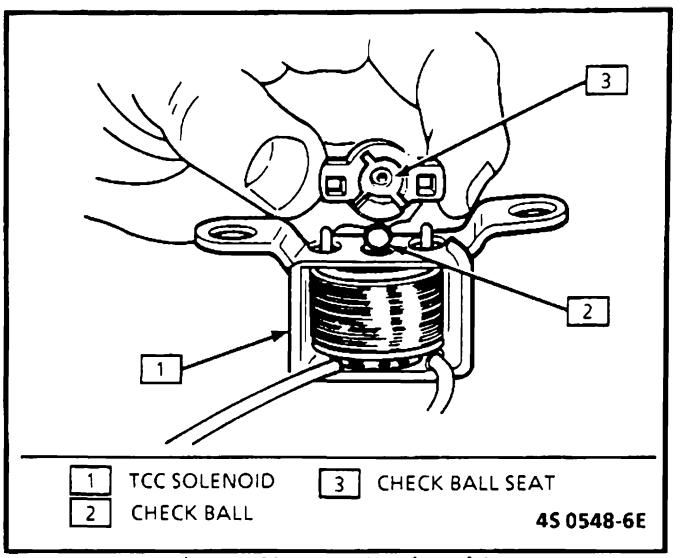

Figure C8-1 - TCC Solenoid

- Another switch used in the TCC circuit is a brake switch which opens the 12 volt supply to the TCC solenoid when the brake is depressed.

Results of Incorrect Operation

If the torque converter clutch is applied at all times, the engine will stall immediately, just as in a manual transmission with the clutch applied.

If the torque converter clutch does not apply, fuel economy may be lower than expected. If the vehicle speed sensor fails, the torque converter clutch will not apply. If the 3rd or 4th gear switch does not operate, the TCC may not apply at the right time.

The Torque Converter Clutch (TCC) system has different operating characteristics than an automatic transmission without TCC. If the driver complains of a "chuggle" or "surge" condition, the car should be road tested and compared to a similar car to see if a real problem exists. Another TCC complaint may be a downshift felt when going up a grade, especially with cruise control. This may be clutch disengagement rather than a downshift, due to the change in TPS to maintain cruising speed. The Owner's Manual section on TCC operation should be reviewed with the driver.

DIAGNOSIS

The diagnosis of the TCC system is covered in CHART C-8. If the ECM detects a problem in the VSS system, a Code 24 should set. In this case see Code 24 CHART.

If the ECM doesn't switch the TCC "ON" when it should, but the TCC will turn "ON" when the ALDL terminal "F" is grounded with ignition "ON" and engine stopped, sensors such as CTS, VSS, and TPS should be checked.

ON-CAR SERVICE

- See Section "7" for TCC solenoid.
- See Section "8C" for VSS.

PARTS INFORMATION

PART NAME	GROUP
Sensor, Vehicle Speed	9.761
Solenoid, TCC	4.122

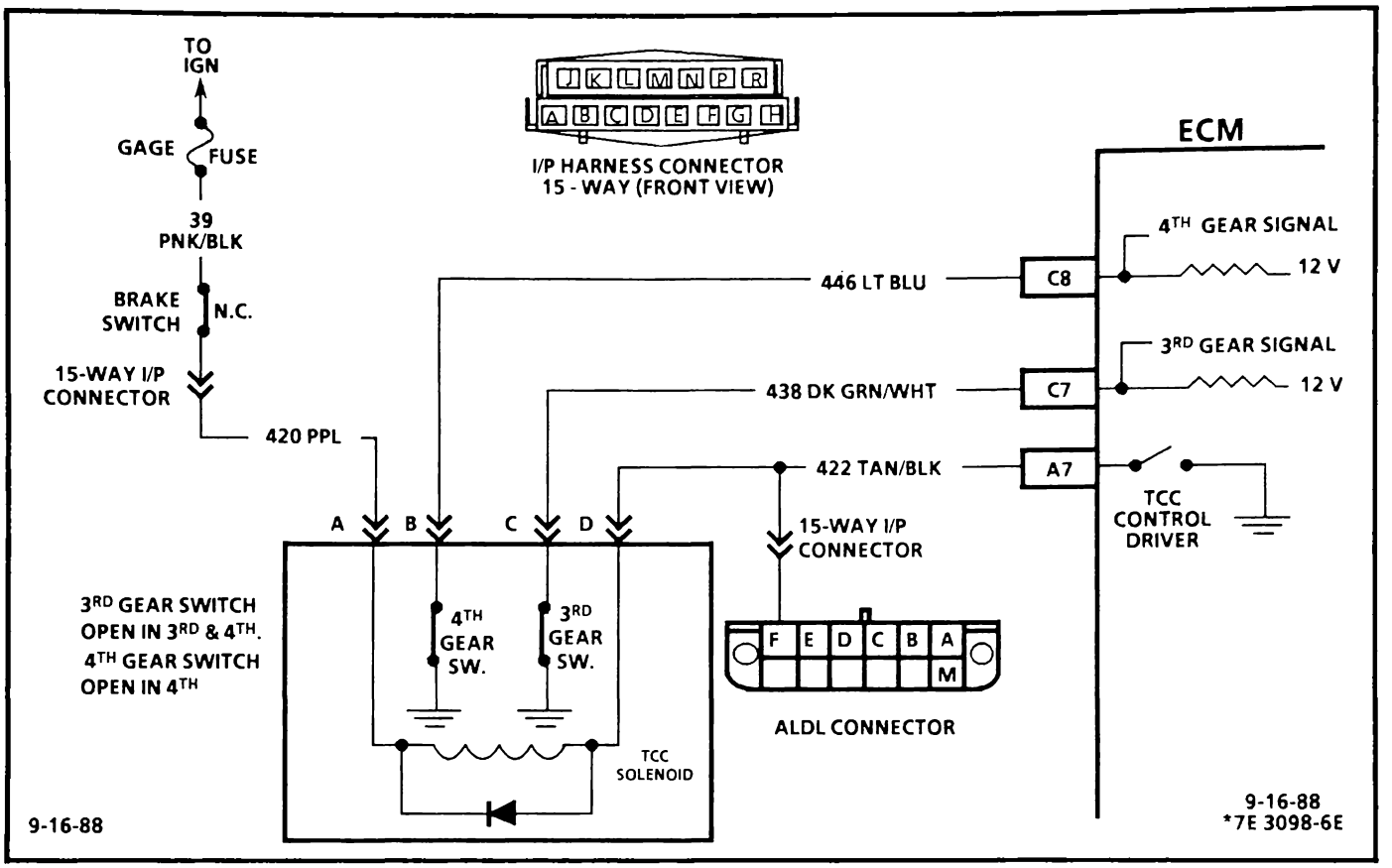

CHART C-8

TORQUE CONVERTER CLUTCH (TCC) SYSTEM
(ELECTRICAL DIAGNOSIS)
3.8L TURBO "F" CARLINE (PORT)

Circuit Description:

The purpose of the automatic transmission Torque Converter Clutch (TCC) feature is to eliminate the power loss of the torque converter when the vehicle is in a cruise condition. This allows the convenience of the automatic and the fuel economy of a manual transmission. The heart of the system is a solenoid located inside the automatic transmission which is controlled by the ECM.

When the solenoid coil is activated "ON," the torque converter clutch is applied which results in 100% mechanical coupling from the engine to transmission. When the transmission solenoid is deactivated, the torque converter clutch is released, which allows the torque converter to operate in the conventional manner (fluid coupling between engine and transmission).

Test Description: Numbers refer to circled numbers on the diagnostic chart.

1. A test light "ON" indicates battery voltage and continuity through the TCC solenoid is OK.
2. The vacuum hose on the throttle shaft pin increases the TPS signal so the TCC will engage, without excessive wheel speed. Without the hose, it would require more than 65 mph to engage the TCC.
3. Checks for vehicle speed sensor signal to ECM. Voltage should vary from under 2 to over 6 volts.
4. Checks for 3rd and 4th gear signal to ECM. These signals will not prevent TCC engagement, but could cause a change in the engage and disengage speed points.
5. Solenoids are turned "ON" or "OFF" by the ECM internal electronic switches called "drivers." Each driver is part of a group of four called "quad-drivers."

CHART C-8

TORQUE CONVERTER CLUTCH (TCC) SYSTEM (ELECTRICAL DIAGNOSIS) 3.8L TURBO "F" CARLINE (PORT)

MECHANICAL CHECKS, SUCH AS LINKAGE, OIL LEVEL, ETC. SHOULD BE PERFORMED PRIOR TO USING THIS CHART

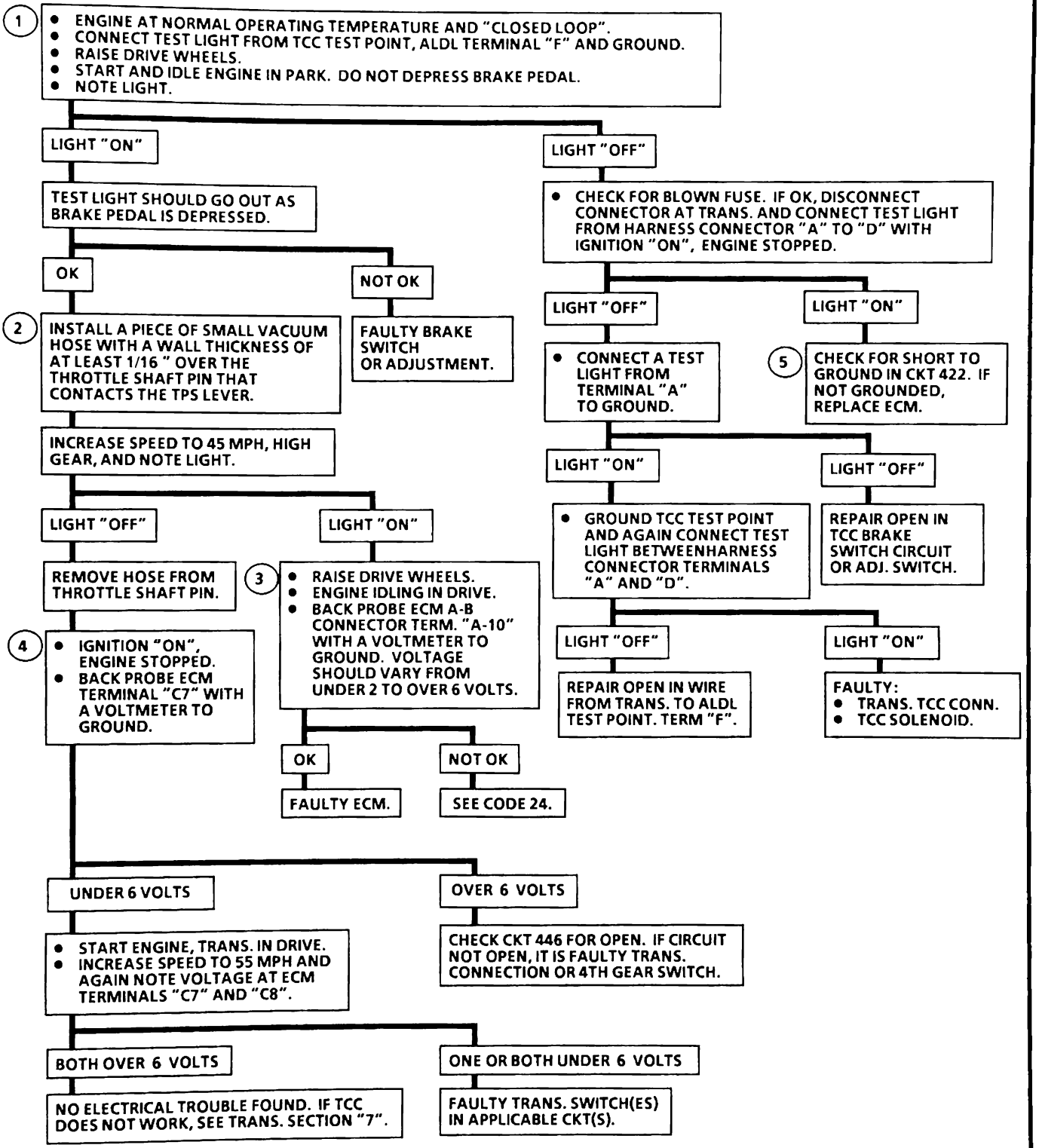

CLEAR CODES AND CONFIRM "CLOSED LOOP" OPERATION AND NO "SERVICE ENGINE SOON" LIGHT.

8-30-88
4S 0904-6E

SECTION C10

A/C CLUTCH CIRCUIT DIAGNOSIS

CONTENTS

GENERAL DESCRIPTION C10-1
OPERATION C10-1
DIAGNOSIS C10-1
ON-CAR SERVICE C10-1

GENERAL DESCRIPTION

In order to improve idle quality and wide open throttle performance, the A/C compressor is controlled by the ECM.

OPERATION

This system consists of a pressure cycling switch, a high pressure cut-out switch, a control relay and the compressor.

The pressure cycling switch is closed when there is sufficient system pressure (depending on refrigerant charge and ambient temperature).

The high pressure cut-out switch (normally closed), opens when the head pressure gets too high. This disables the A/C clutch before damage can occur to the system.

When A/C control switch is "ON," and the pressure cycling switch is closed, a request signal is sent to the ECM, which then energizes the A/C control relay. When the ECM sees the A/C request signal, it will also turn "ON" the cooling fan.

The A/C control relay is controlled by the ECM so that the ECM can increase idle speed before turning "ON" the clutch or disable the clutch during WOT.

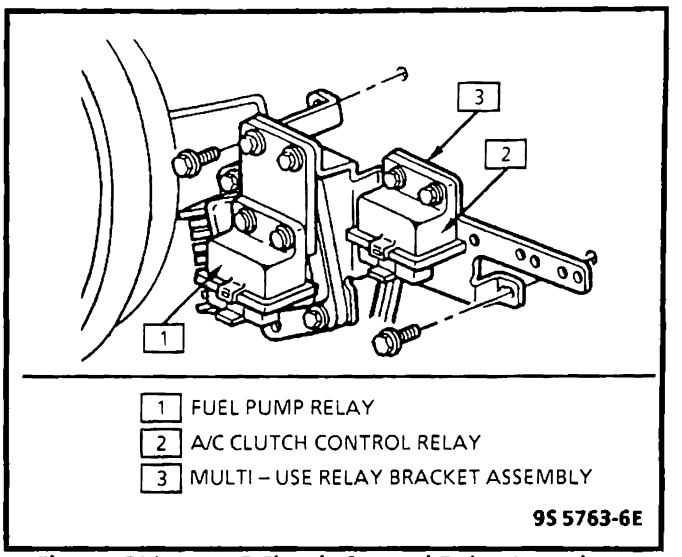

Figure C10-1 - A/C Clutch Control Relay Location

DIAGNOSIS

CHART C-10 should be used for diagnosing the electrical portion of the A/C circuit. Section "1B" should be used for diagnosing the refrigerant portion of the system.

The "Scan" tool will be used in diagnosing the system, as it has the ability to read the A/C request input to the ECM, as well as displaying when the ECM has commanded the A/C clutch "ON."

ON-CAR SERVICE

For removal and replacement procedures of A/C components, refer to Section "1" of the service manual.

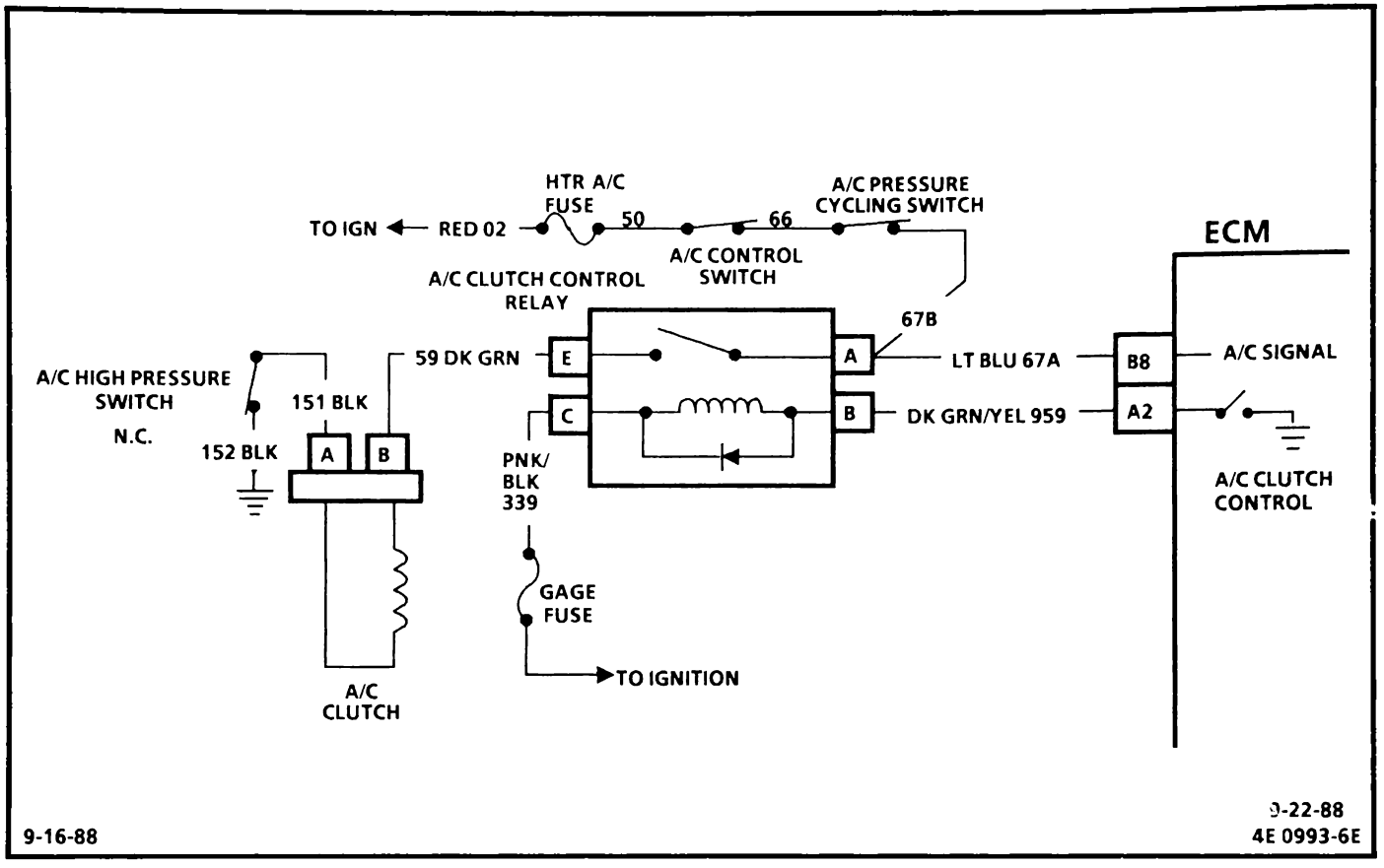

CHART C-10

A/C CLUTCH CIRCUIT DIAGNOSIS
3.8L TURBO "F" CARLINE (PORT)

Circuit Description:

The A/C clutch control relay is ECM controlled to delay A/C clutch engagement .4 seconds after A/C is turned "ON." This allows the IAC to adjust engine rpm before the A/C clutch engages. The ECM also disengages the A/C clutch during WOT operation.

When an A/C Mode is selected on the A/C control switch, ignition voltage is supplied to the pressure cycling switch. If there is sufficient A/C refrigerant pressure, the pressure cycling switch will be closed and complete the circuit to the A/C clutch control relay and to CKTs 67A and 67B. The voltage on CKT 67A to the ECM is shown by the "Scan" tool as A/C request "ON" (voltage present), or "OFF" (no voltage). When a request for A/C is seen by the ECM, the ECM will ground CKT 959 of the A/C clutch control relay. The relay contacts will close and current will flow from CKT 67B to CKT 59 and engage the A/C compressor clutch, provided the A/C high pressure switch is closed. When voltage is seen by the ECM on CKT 67A the cooling fan will be turned "ON."

Test Description: Numbers below refer to circled numbers on the diagnostic chart.

1. Checks to see if ECM is controlling A/C clutch control relay.
2. Checks for grounded CKT 959 to ECM.
3. Checks operation of A/C pressure cycling switch.
4. Checks for open circuit on either side of relay coil.

CHART C-10

A/C CLUTCH CONTROL 3.8L TURBO "F" CARLINE (PORT)

- IGNITION "ON".
- ENGINE STOPPED.
- CYCLE A/C "ON" AND "OFF". DOES COMPRESSOR ENGAGE?

NO

- START AND IDLE ENGINE.
- CYCLE A/C "ON" AND "OFF". DOES CLUTCH ENGAGE WITH A/C "ON"? (1)

NO

- WITH A/C "ON" AND ENGINE STILL IDLING, "SCAN" A/C REQUEST SHOULD BE "ON".

NO

- IGNITION "ON".
- ENGINE "OFF".
- A/C "ON"

IS A/C FUSE OK?

YES

DISCONNECT PRESSURE CYCLING SWITCH. PROBE CKT 66 WITH TEST LIGHT TO GROUND. (3)

LIGHT "ON"

- JUMPER HARNESS TERMINALS TOGETHER. DOES "SCAN" DISPLAY A/C REQUEST "ON"?

NO

- DISCONNECT A/C RELAY.
- PROBE HARNESS TERMINAL "A" WITH A TEST LIGHT TO GROUND.
- IS LIGHT "ON"?

NO

OPEN CKT 67B.

YES

OPEN CKT 67A FAULTY ECM CONN., OR ECM.

YES

- FAULTY SWITCH OR CONNECTION
- LOW A/C SYSTEM CHARGE.

LIGHT "OFF"

REPAIR OPEN CKT 66.

NO

- DISCONNECT A/C CLUTCH RELAY.
- PROBE HARNESS CONNECTOR TERMINAL CKT 67A WITH TEST LIGHT TO 12 V.
- OBSERVE TEST LIGHT.

LIGHT "ON"

- DISCONNECT PRESSURE CYCLING SWITCH.
- OBSERVE LIGHT.

LIGHT "ON"

REPAIR SHORT TO GROUND CKT 67A OR 67B..

LIGHT "OFF"

SHORT TO GROUND CKT 66.

YES

(2) SHORT TO GROUND CKT 959, OR FAULTY RELAY.

YES

DOES ENGINE COOLING FAN OPERATE WITH A/C "ON", ENGINE IDLING?

YES

NO TROUBLE FOUND; CHECK FOR BASIC A/C PROBLEM.

NO

SEE CHART C-12.

YES

DISCONNECT A/C CLUTCH CONTROL RELAY. CONNECT TEST LIGHT BETWEEN HARNESS CONNECTOR TERMINALS CKTS 339 AND 959.

LIGHT "ON"

(4) JUMPER HARNESS CONNECTOR TERMINALS CKTS 67A TO 59. A/C CLUTCH SHOULD ENGAGE.

ENGAGES

RELAY FAULTY

DOES NOT ENGAGE

- DISCONNECT HIGH PRESSURE SWITCH.
- JUMPER HARNESS TERMINALS TOGETHER.
- DOES A/C CLUTCH ENGAGE?

NO

OPEN CKT 59. FAULTY CLUTCH COIL OR CONNECTION. OPEN CKT 151. POOR GROUND.

YES

FAULTY HIGH PRESSURE SWITCH OR CONNECTION.

LIGHT "OFF"

CONNECT TEST LIGHT BETWEEN HARNESS TERMINAL CKT 339 & GROUND.

LIGHT "ON"

REPAIR OPEN CKT 959.

LIGHT "OFF"

REPAIR OPEN CKT 339.

LIGHT "OFF"

- DISCONNECT A/C CLUTCH COIL CONNECTOR.
- PROBE HARNESS CONNECTOR TERMINAL CKT 59.

LIGHT "ON"

SHORT TO GROUND CKT 59.

LIGHT "OFF"

FAULTY RELAY

10-5-88
7E 3228-6E

SECTION C12

ELECTRIC COOLING FAN

CONTENTS

GENERAL DESCRIPTION C12-1
OPERATION C12-1
DIAGNOSIS C12-1
ON-CAR SERVICE C12-2
PARTS INFORMATION C12-2

GENERAL DESCRIPTION

The fan is used for engine and A/C condenser cooling but the fan only operates under certain conditions.

OPERATION

All electric cooling fans operate when engine coolant temperature exceeds a certain value. This is controlled by a temperature override switch installed on the engine. The switch closes at a calibrated value and completes the ground path for the coolant fan relay. The relay contacts then close and complete the circuit between the fusible link and the fan motor. When the engine cools down, the switch opens and the fan stops.

The ECM will complete the ground path for the coolant fan relay, when it sees engine temperature above a certain value or when the A/C is turned "ON." The ECM causes the ground path for the relay to open when car speed is over about 48 mph. This is done because enough air should be moving through the radiator, to adequately cool it, at this speed.

The A/C head pressure switch completes the ground path for the coolant fan relay, when A/C pressures exceed 1782 kPa (260 psi).

DIAGNOSIS

The following C-12 circuit charts will diagnose the ECM controlled cooling fan.

For specific system description, components and wiring, see Section "8A".

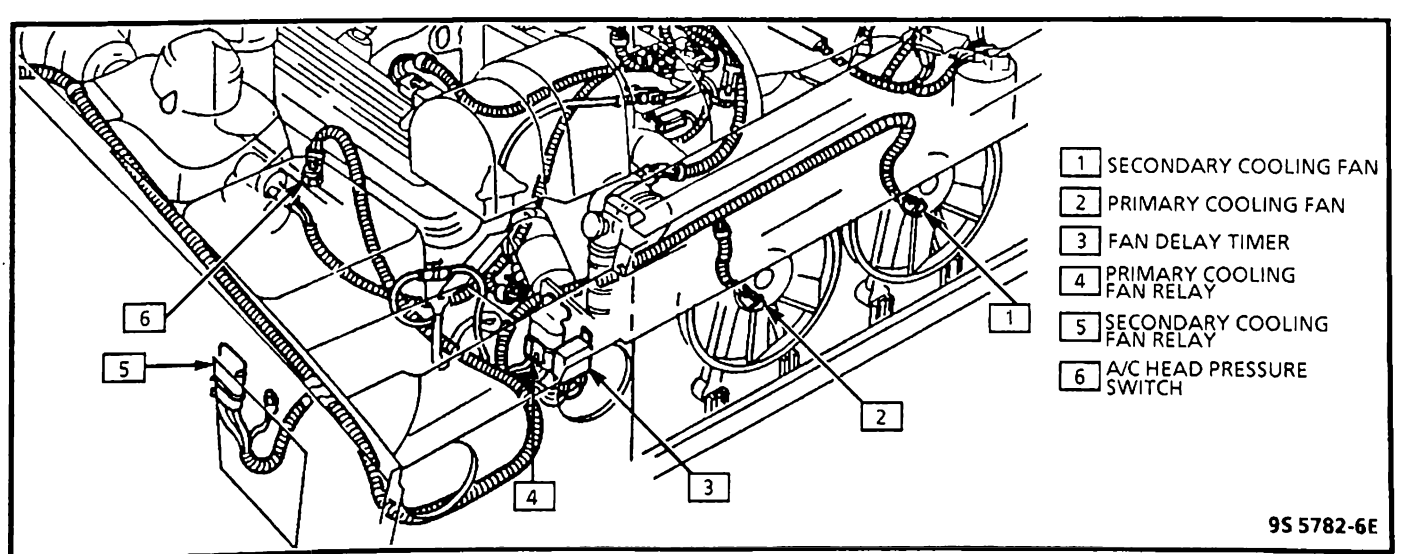

Figure C12-1 - Electric Cooling Fan Component Locations - 3.8L

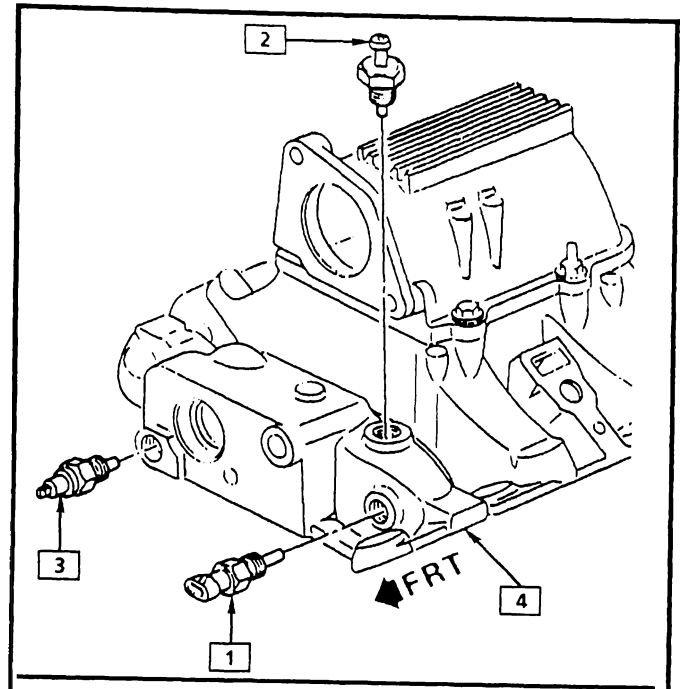

1 COOLANT TEMPERATURE SENSOR (CTS)
2 COOLANT FAN TEMPERATURE SWITCH
3 COOLANT TEMTERATURE INDICATOR SENSOR
4 INTAKE MANIFOLD

9S 5710-6E

Figure C12-2 - Coolant Fan Temperature Switch

ON-CAR SERVICE

Cooling system component replacement can be found in Section 6B.

PARTS INFORMATION

PART NAME	GROUP
Fan, Engine	1.055
Motor, Fan	1.055
Relay, Engine Fan	1.055
Switch, Fan	1.055

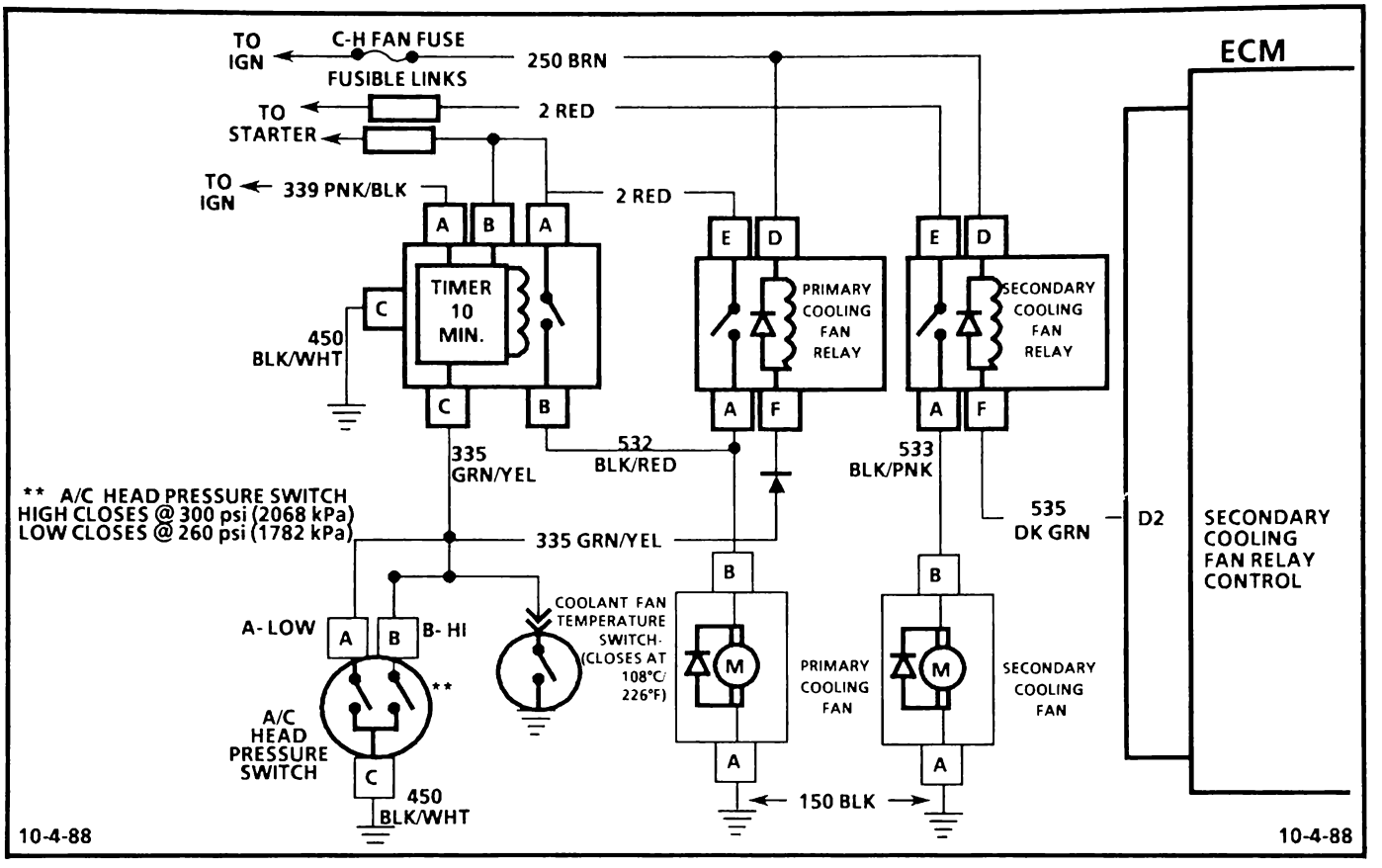

CHART C-12A

COOLING FAN CHECK
3.8L TURBO "F" CARLINE (PORT)

Circuit Description:

Two coolant fans are energized through a Primary Cooling Fan Relay, Secondary Cooling Fan Relay, and Fan Delay Relay. The relays are energized, when current flows to ground, through the activation of the A/C head pressure switch, coolant fan temperature switch, and/or the ECM.

Secondary Cooling Fan Relay - The Secondary Cooling Fan Relay is energized by the ECM or the A/C head pressure fan switch providing a path to ground. The ECM energizes the relay through terminal "D2" when the engine coolant temperature reaches 92°C (198°F), and vehicle speed is below 48 mph. The Secondary Cooling Fan Relay is also energized through the A/C head pressure fan switch, terminal "A", when A/C refrigerant pressure reaches 1782 kPa (260 psi).

Primary Cooling Fan Relay - The Primary Cooling Fan Relay is energized by the A/C head pressure switch or the coolant fan temperature switch providing a path to ground. If the A/C refrigerant pressure reaches 2068 kPa (300 psi) or the engine coolant temperature reaches 108°C (226°F) the primary cooling fan relay is energized. The ECM has no control of the primary cooling fan relay.

Fan Delay Relay - The Fan Delay Relay is energized by the coolant fan temperature switch providing a path to ground. If the coolant fan temperature switch is 108°C (226°F) or higher when the ignition switch is turned "OFF" the fan delay relay is energized for 10 minutes or until the engine coolant temperature is lowered below 108°C (226°F). The primary cooling fan is the only fan that will run with the ignition switch "OFF."

Test Description:

Numbers below refer to circled numbers on the diagnostic chart.

1. Grounding the diagnostic "test" terminal should cause the ECM to ground CKT 535 and, the secondary fan should run.
2. Grounding the temp. switch harness terminal will check CKT 335 and will also check the primary cooling fan control relay.
3. Checks CKT 533, between primary cooling fan relay terminal "A" and the motor. If the fan does not operate, CKT 533 is open, or motor is faulty.
4. When the ignition is turned "OFF," with the temp. sw. grounded, the delay relay is activated. This will cause the fan to turn "ON," for up to 10 min., after engine shutdown.
5. This step checks to see if the temp. sw. is grounding and is grounded, when the light comes "ON." The switch should close at 108°C (226°F).
6. The following steps will check the head pressure switches related wiring, from the switch to the fan control relay. If poor A/C performance is noted, the A/C press. switches should be checked by a qualified A/C repair person. The secondary fan should come "ON", if head press. exceeds 260 psi, and the primary fan should turn "ON" at 300 psi.

CHART C-12A

COOLING FAN CHECK 3.8L TURBO "F" CARLINE (PORT)

- MAKE SURE SEALED COOLING SYSTEM, COOLANT LEVEL, AND BELTS ARE OK.
- IGNITION "ON", ENGINE STOPPED.
- A/C SELECTOR SWITCH "OFF."
- COOLANT TEMPERATURE BELOW 90°C (194°F).

FAN "OFF" (NORMAL)

(1)
- GROUND TEST TERMINAL.
- SECONDARY (DRIVERS SIDE) FAN SHOULD RUN.

OK

(2)
- IGNITION "ON," ENGINE STOPPED.
- TEST TERMINAL NOT GROUNDED.
- DISCONNECT COOLANT TEMPERATURE SWITCH CONNECTOR AND JUMPER THE HARNESS TERMINAL TO GROUND.
- PRIMARY FAN SHOULD RUN.

OK

(4) LEAVE TEMP. SWITCH HARNESS JUMPERED TO GROUND. TURN IGNITION "OFF." FAN DELAY RELAY SHOULD CAUSE FAN TO CONTINUE RUNNING.

OK

(5) RECONNECT TEMPERATURE SWITCH. REMOVE PRIMARY FAN CONTROL RELAY CONNECTOR AND PROBE HARNESS TERMINAL "F" WITH A TEST LIGHT CONNECTED TO 12 V A/C "OFF". IDLE ENGINE UNTIL TEST LIGHT OR HOT LIGHT ON INSTRUMENT PANEL COMES "ON."

TEST LIGHT "ON."

RECONNECT FAN CONTROL RELAY

HOT LIGHT "ON" TEST LIGHT "OFF."

REPLACE TEMPERATURE SWITCH.

(6) IGNITION "ON" ENGINE STOPPED. DISCONNECT HEAD PRESSURE SWITCH. JUMPER HARNESS TERM. "A" TO GROUND AND SECONDARY FAN SHOULD RUN. JUMPER TERM. "B" TO GROUND AND PRIMARY FAN SHOULD RUN.

OK

TEST LIGHT TO 12V CHECK GROUND CIRCUIT

NOT OK

REPLACE OPEN WIRE BETWEEN RELAY AND A/C HEAD PRESSURE SWITCH ON CIRCUIT THAT DID NOT TURN ON THE FAN.

ON

NO TROUBLE FOUND. COOLING FAN CIRCUIT OK.

OFF

REPAIR OPEN GROUND CIRCUIT.

CLEAR CODES AND CONFIRM "CLOSED LOOP" OPERATION AND NO "SERVICE ENGINE SOON" LIGHT.

FAN "ON"

SEE FAN ON AT ALL TIMES. CHART C-12 B

NOT OK

SEE "NO" LOW SPEED CHART C-12 C.

NOT OK

(3)
- DISCONNECT RELAY.
- JUMPER HARNESS TERMINALS "E" TO "A".
- PRIMARY FAN SHOULD RUN.

OK

CHECK WIRE AND CONNECTIONS IN CKT 335 FROM RELAY TERM. "F" TO TEMP. SWITCH FOR AN OPEN CIRCUIT. IF WIRE AND CONNECTIONS ARE OK, REPLACE RELAY

NOT OK

REPAIR OPEN IN CKT 002 OR 533 TO MOTOR.

NOT OK

- DISCONNECT FAN DELAY RELAY.
- PROBE CONN. TERMS. ON BOTH CONNECTORS FOR CKT 002 WITH A TEST LIGHT CONNECTED TO GROUND.
- IGNITION "ON," ENGINE STOPPED.

LIGHT "ON" BOTH

- IGNITION "ON"
- PROBE CONN. TERM (CKT 339) WITH A TEST LIGHT CONNECTED TO GROUND.

NO LIGHT "ON" ONE OR BOTH

REPAIR OPEN IN CKT THAT DID NOT LIGHT THE LIGHT.

LIGHT "ON"

- CONNECT A TEST LIGHT BETWEEN BLACK WIRE (CKT 450) AND 12 V.

LIGHT "OFF"

REPAIR SHORT TO GROUND OR OPEN CKT 339 OR FAULTY IGNITION SWITCH.

LIGHT "OFF"

REPAIR OPEN GROUND CKT 450B.

LIGHT "ON"

CHECK FOR OPEN IN CKT 335 BETWEEN FAN DELAY RELAY AND TEMP. SWITCH.

CKT OK

CHECK FOR OPEN IN CKT 532 BETWEEN MOTOR TERM "B" AND FAN DELAY RELAY. ALSO, CHECK CONNECTIONS.

OK

REPLACE FAN DELAY RELAY

NOT OK

REPAIR OPEN IN CKT 532

CKT NOT OK

REPAIR OPEN CKT 335.

6S 2744-6E

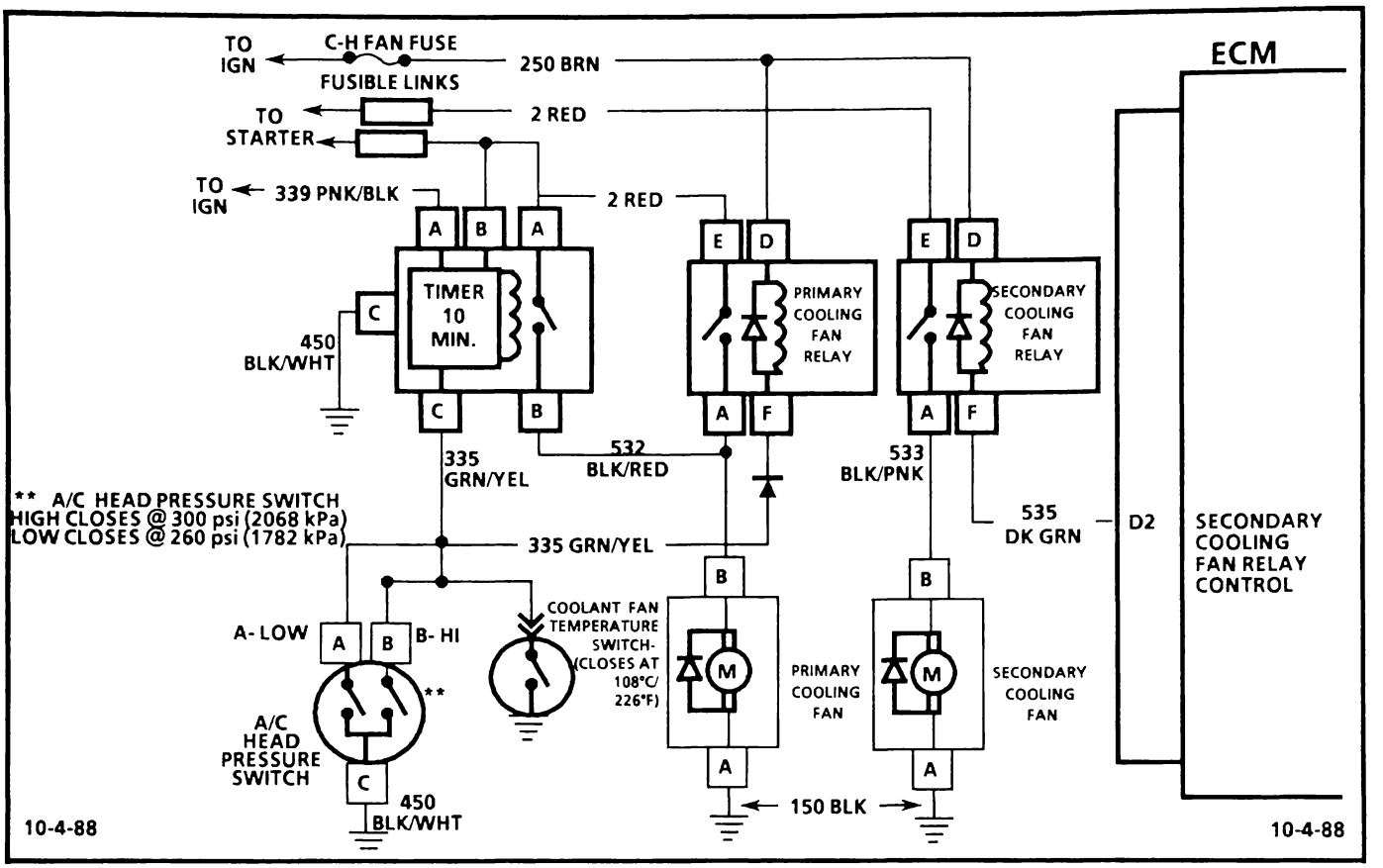

CHART C-12B

COOLING FAN CHECK
(FAN "ON" AT ALL TIMES)
3.8L TURBO "F" CARLINE (PORT)

Circuit Description:

Two coolant fans are energized through a Primary Cooling Fan Relay, Secondary Cooling Fan Relay, and Fan Delay Relay. The relays are energized, when current flows to ground, through the activation of the A/C coolant switches and/or the ECM.

Secondary Cooling Fan Relay - The Secondary Cooling Fan Relay is energized by the ECM or the A/C head pressure fan switch providing a path to ground. The ECM energizes the relay through terminal "D2" when the engine coolant temperature reaches 92°C (198°F), and vehicle speed is below 48 mph. The Secondary Cooling Fan Relay is also energized through the A/C head pressure fan switch, terminal "B", when A/C refrigerant pressure reaches 1034 kPa (150 psi).

Primary Cooling Fan Relay - The Primary Cooling Fan Relay is energized by the A/C head pressure switch or the coolant fan temperature switch providing a path to ground. If the A/C refrigerant pressure reaches 2068 kPa (300 psi) or the engine coolant temperature reaches 108°C (226°F) the primary cooling fan relay is energized. The ECM has no control of the primary cooling fan relay.

Fan Delay Relay - The Fan Delay Relay is energized by the coolant fan temperature switch providing a path to ground. If the coolant fan temperature switch is 108°C (226°F) or higher when the ignition switch is turned "OFF" the fan delay relay is energized for 10 minutes or until the engine coolant temperature is lowered below 108°C (226°F). The primary cooling fan is the only fan that will run with the ignition switch "OFF."

Test Description: Numbers below refer to circled numbers on the diagnostic chart.

1. This step will separate the problem between the delay or the fan control relays.
2. Check to see if CKT 535 is shorted to ground, which would keep the relay grounded at all times.
3. Checks to see if CKT 335 is shorted to ground. A light indicates the wire is shorted to ground, and the following steps will isolate the short.
4. If the test light is "OFF" after disconnecting the ECM, it is shorted internally. Before replacing the ECM check the resistance value of the secondary cooling fan relay. Replace, if resistance is less than 20 ohms. Also, make sure that CKT 535 is not shorted to B+, and check the resistance of the canister purge solenoid and replace, if under 20 ohms.

CHART C-12B

COOLING FAN CHECK
(FAN "ON" AT ALL TIMES)
3.8L TURBO "F" CARLINE (PORT)

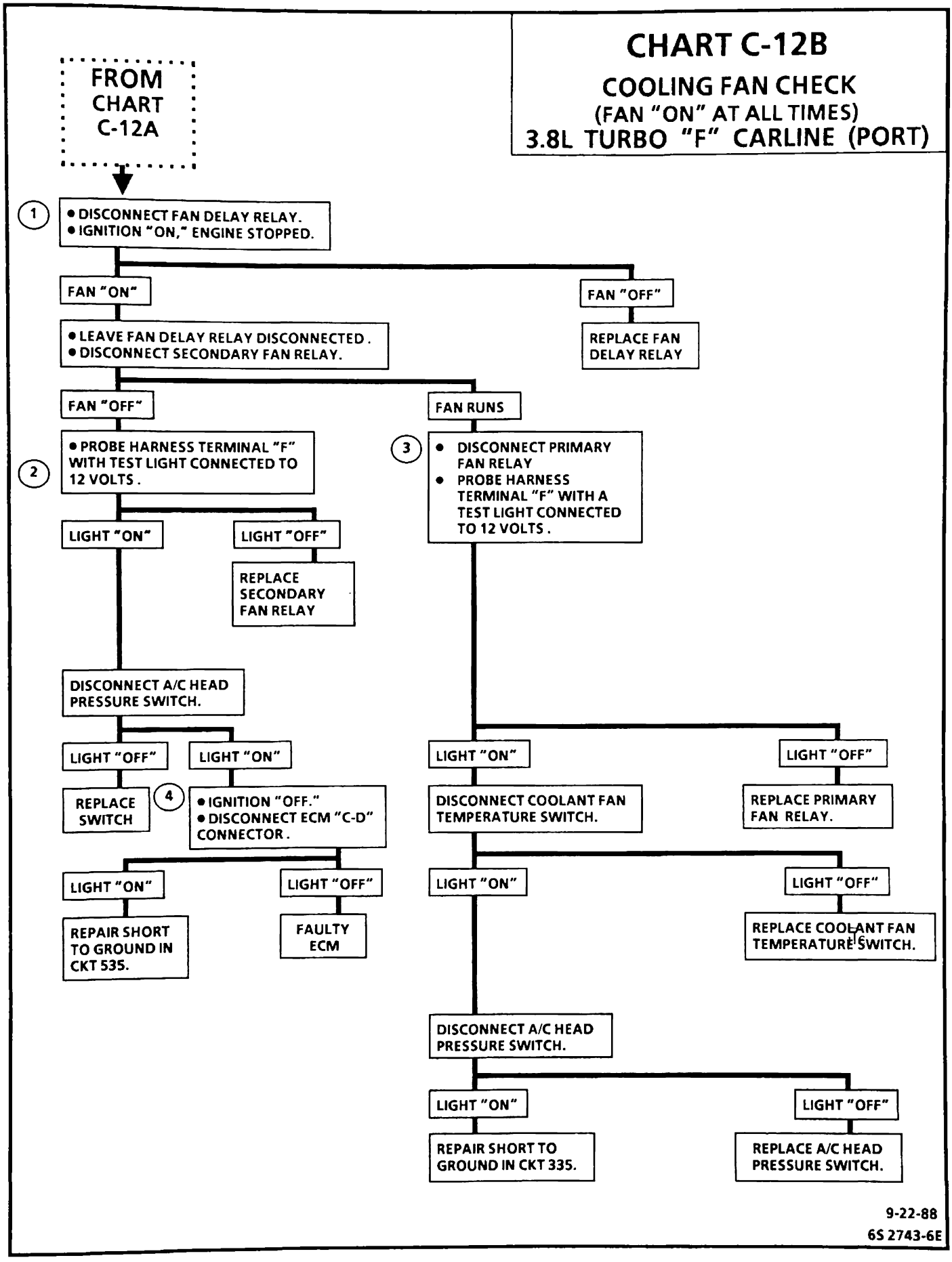

9-22-88
6S 2743-6E

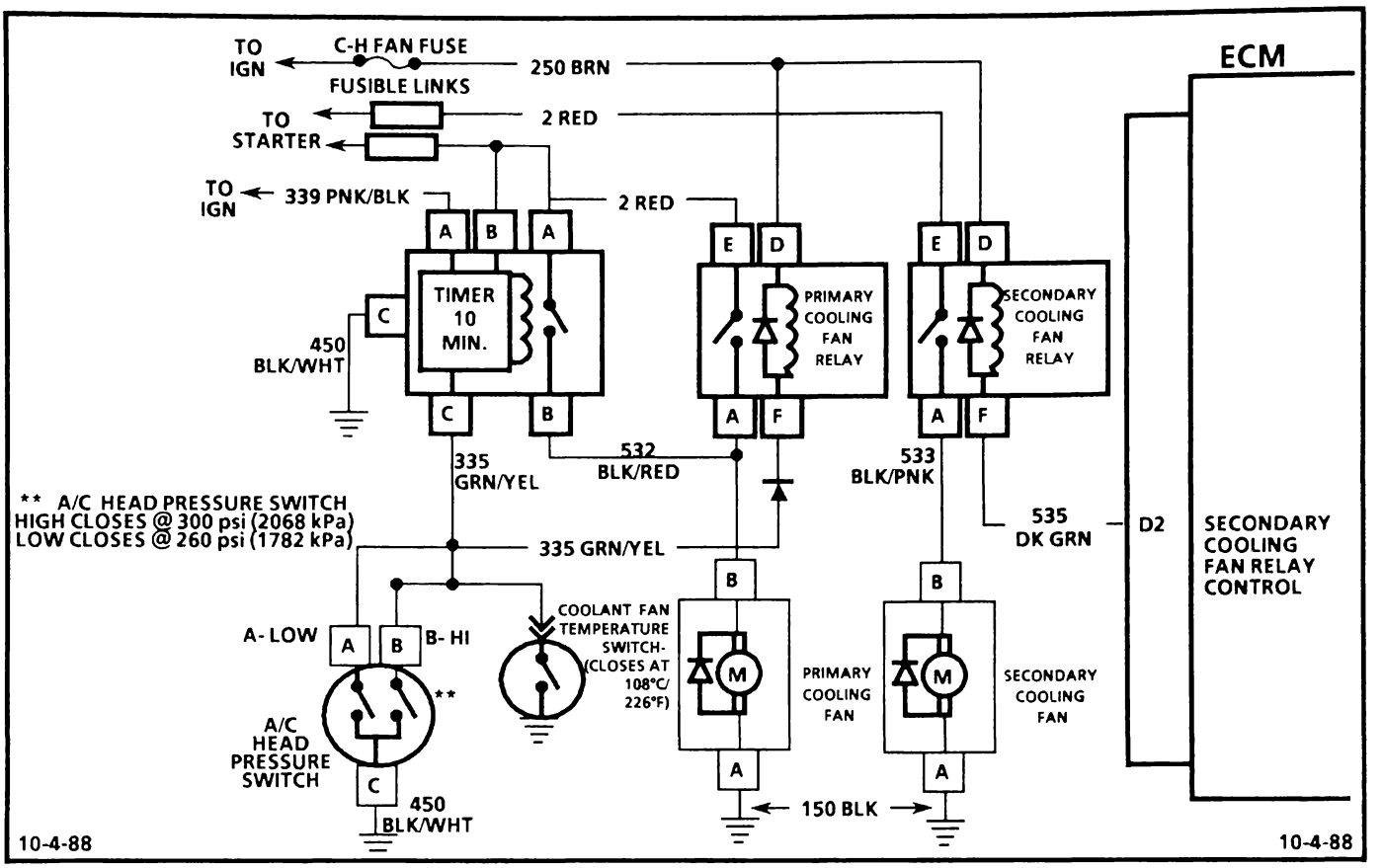

CHART C-12C

COOLING FAN CHECK
(NO SECONDARY FAN)
3.8L TURBO "F" CARLINE (PORT)

Circuit Description:

Two coolant fans are energized through a Primary Cooling Fan Relay, Secondary Cooling Fan Relay, and Fan Delay Relay. The relays are energized, when current flows to ground, through the activation of the A/C coolant switches and/or the ECM.

Secondary Cooling Fan Relay - The Secondary Cooling Fan Relay is energized by the ECM or the A/C head pressure fan switch providing a path to ground. The ECM energizes the relay through terminal "D2" when the engine coolant temperature reaches 92°C (198°F), and vehicle speed is below 48 mph. The Secondary Cooling Fan Relay is also energized through the A/C head pressure fan switch, terminal "B", when A/C refrigerant pressure reaches 1034 kPa (150 psi).

Primary Cooling Fan Relay - The Primary Cooling Fan Relay is energized by the A/C head pressure switch or the coolant fan temperature switch providing a path to ground. If the A/C refrigerant pressure reaches 2068 kPa (300 psi) or the engine coolant temperature reaches 108°C (226°F) the primary cooling fan relay is energized. The ECM has no control of the primary cooling fan relay.

Fan Delay Relay - The Fan Delay Relay is energized by the coolant fan temperature switch providing a path to ground. If the coolant fan temperature switch is 108°C (226°F) or higher when the ignition switch is turned "OFF" the fan delay relay is energized for 10 minutes or until the engine coolant temperature is lowered below 108°C (226°F). The primary cooling fan is the only fan that will run with the ignition switch "OFF."

Test Description: Numbers below refer to circled numbers on the diagnostic chart.

1. Checks for battery + at relay harness connector.
2. Jumpering terminals "E" to "A" bypasses the relay, which should cause the fan to run, if fan motor and wiring to the motor are good.
3. Grounding the test terminal should cause the ECM to ground CKT 535. At this point, the test light should light, if the ECM is good and CKT 535 isn't open.
4. This checks for battery + and ground to the fan motor. A test light "ON," at this point, indicates a faulty fan motor connection or motor.

CHART C-12C

COOLING FAN CHECK
(NO SECONDARY FAN)
3.8L TURBO "F" CARLINE (PORT)

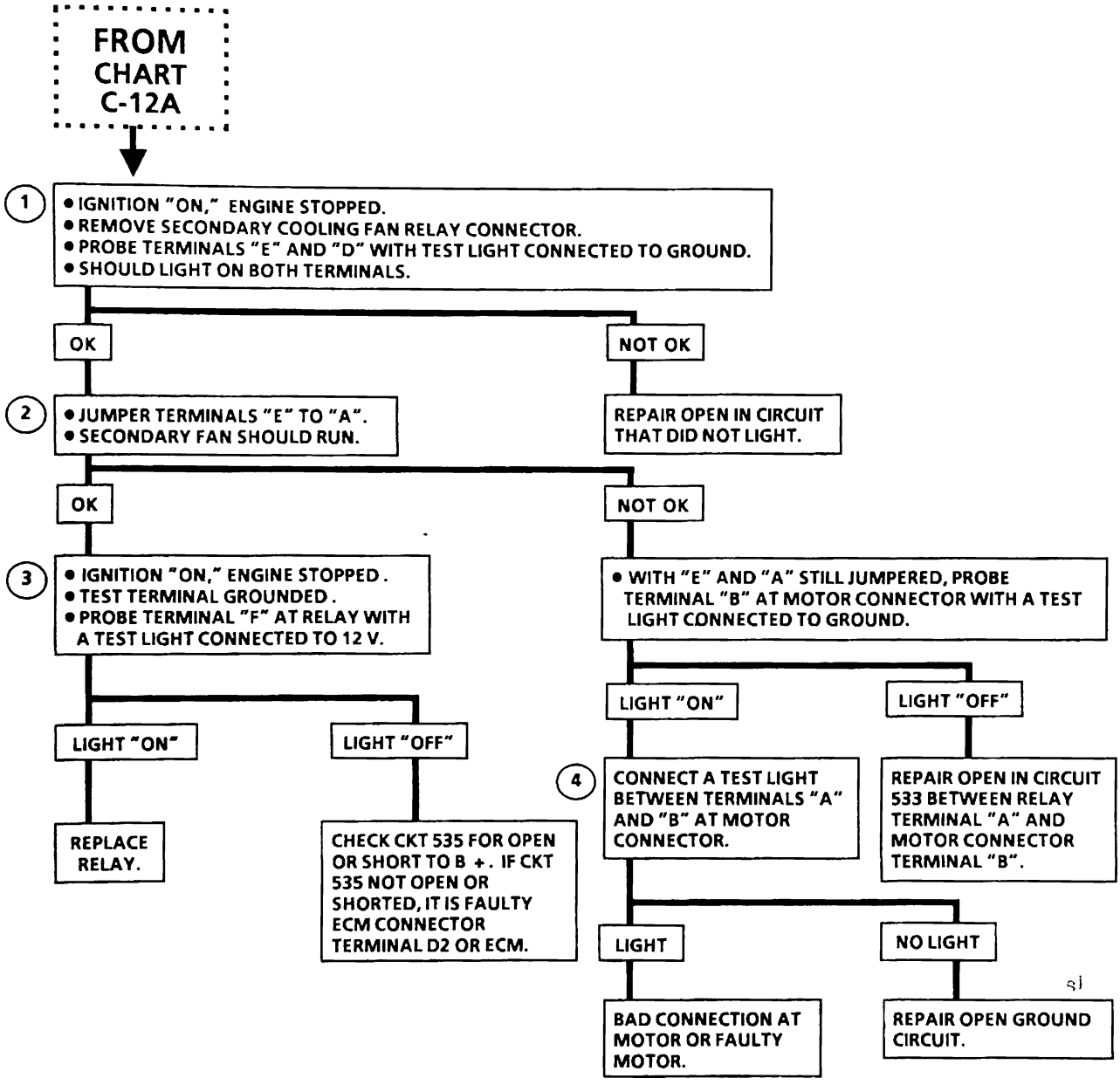

9-19-88

6S 2741-6E

SECTION C13

POSITIVE CRANKCASE VENTILATION (PCV)

CONTENTS

GENERAL DESCRIPTION C13-1
OPERATION C13-1
RESULTS OF INCORRECT OPERATION C13-1
DIAGNOSIS C13-2
FUNCTIONAL CHECK OF PCV VALVE C13-2
FUNCTIONAL CHECK OF PCV VALVE SYSTEM C13-2
ON-CAR SERVICE C13-2
PARTS INFORMATION C13-2

GENERAL DESCRIPTION

A Positive Crankcase Ventilation (PCV) system is used to consume crankcase vapors in the combustion process instead of venting to atmosphere. Fresh air from the air cleaner is supplied to the crankcase, mixed with blow-by gases and then passed through a Positive Crankcase Ventilation (PCV) valve into the intake manifold (Figure C13-1).

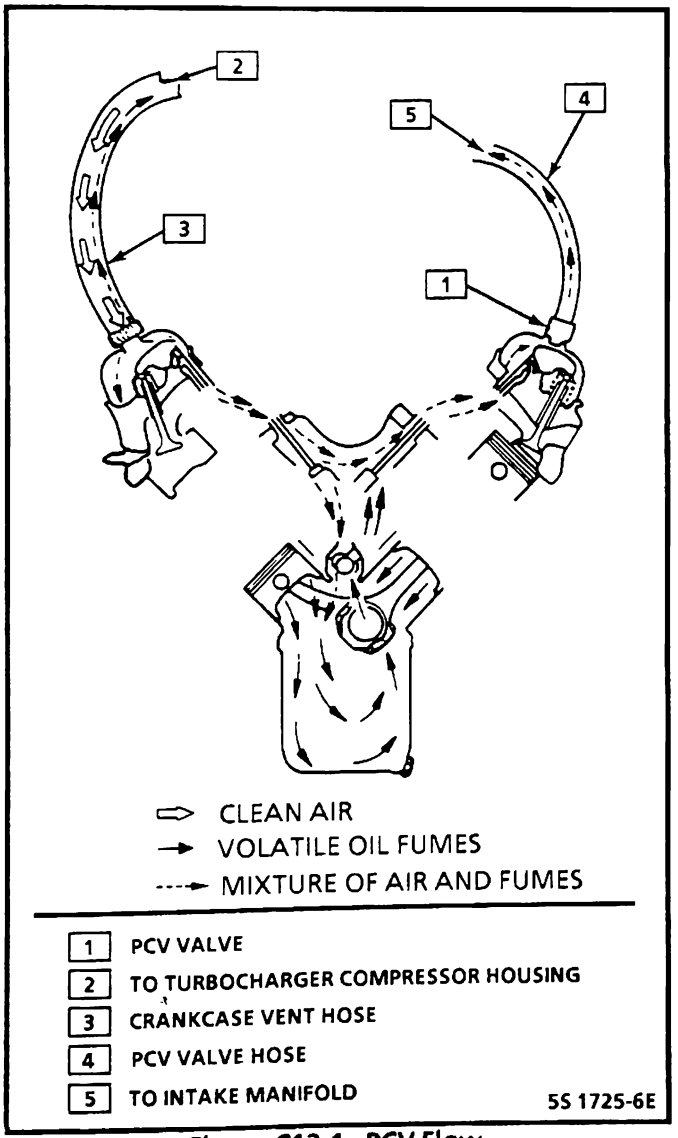

Figure C13-1 - PCV Flow

OPERATION

The primary control is through the PCV valve (Figure C13-2) which meters the flow at a rate depending on manifold vacuum.

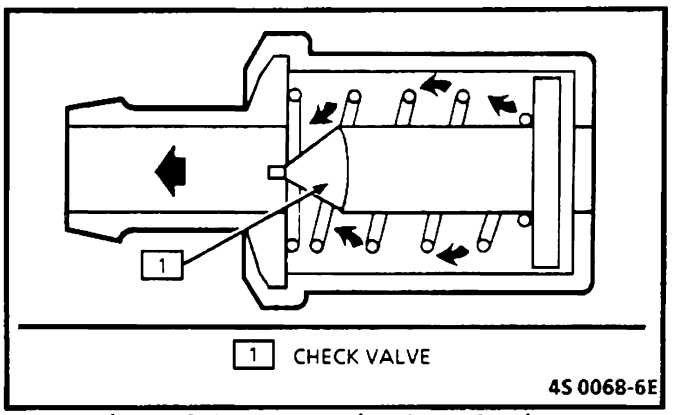

Figure C13-2 - PCV Valve Cross Section

To maintain idle quality, the PCV valve restricts the flow when intake manifold vacuum is high. If abnormal operating conditions arise, the system is designed to allow excessive amounts of blow-by gases to back flow through the crankcase vent tube into the turbocharger compressor housing to be consumed by normal combustion.

RESULTS OF INCORRECT OPERATION

- A plugged valve or hose may cause:
  - Rough idle.
  - Stalling or slow idle speed.
  - Oil leaks.
  - Sludge in engine.
- A leaking valve or hose would cause:
  - Rough idle.
  - Stalling.
  - High idle speed.

DIAGNOSIS

FUNCTIONAL CHECK OF PCV VALVE

If an engine is idling rough, check for a clogged PCV valve or plugged hose. Replace as required. Use the following procedure:

1. Remove PCV valve from intake manifold.
2. Run the engine at idle.
3. Place your thumb over end of PCV valve to check for vacuum. If there is no vacuum at PCV valve, check for plugged hoses or manifold port, or PCV valve. Replace plugged or deteriorated hoses.
4. Turn "OFF" the engine and remove PCV valve. Shake valve and listen for the rattle of needle inside the valve. If valve does not rattle, replace valve.

FUNCTIONAL CHECK OF PCV VALVE SYSTEM

1. Check PCV Valve for correct application.
2. Engine at normal operating temperature.
3. Block off PCV system fresh air intake passage.
4. Remove engine oil dispstick and install a vacuum gage on dipstick tube.
5. Run engine at 1500 rpm for 30 seconds then read vacuum gage while at 1500 rpm.
   If a vacuum is present the PCV system is functioning properly.
   No vacuum indicates the engine may not be sealed and/or is drawing in outside air. Check valve cover, oil pan gasket for leaks.
   If the vacuum gage registers a pressure or the vacuum gage is pushed out of the dipstick tube, check for the correct PCV valve, a plugged hose, or excessive engine blow-by.

With this system, any blow-by in excess of the system capacity (from a badly-worn engine, sustained heavy load, etc.) is exhausted into the intake manifold and is drawn into the engine.

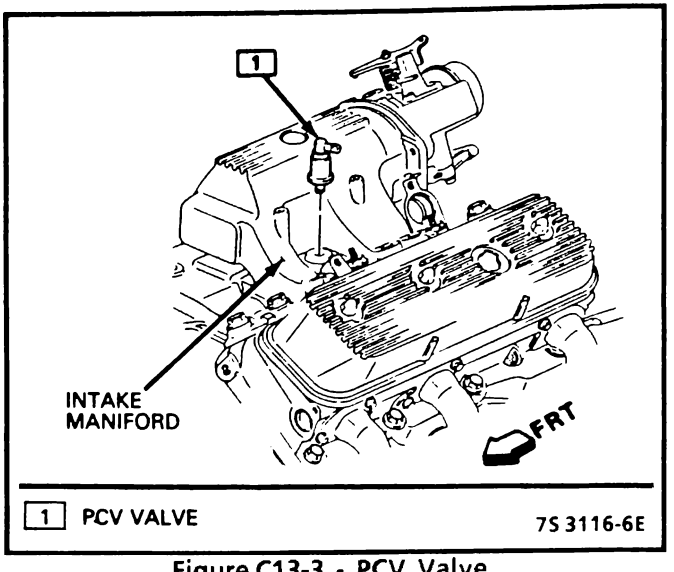

Figure C13-3 - PCV Valve

ON-CAR SERVICE

An engine which is operated without any crankcase ventilation can be damaged. Therefore, it is important to replace the PCV valve and air inlet filter/separator (where used) at intervals shown in Section "0B".

Periodically, inspect the hoses and clamps and replace any showing signs of deterioration.

PARTS INFORMATION

PART NAME	GROUP
Air Cleaner	3.402
Valve Asm, Cr/Case Vent	1.745
Tube, Cr/Case Vent	1.762

SECTION	PAGE
A	
Acceleration Mode	C2-2
A/C Clutch Circuit Diagnosis	C10-1
General Description	C10-1
Diagnosis	C10-1
Service	C10-1
CHART C-10	C10-2
A/C Request Signal	
General Description	C1-4
Diagnosis	C1-6
ALDL Connector	A-12
Automatic Transmission Torque Converter Clutch (TCC) System	
Electrical Diagnosis	C8-4
B	
Backfire	B-5
Battery Voltage Correction Mode	C2-2
C	
Calpak	C1-2
General Description	C1-2
Service	C1-8
Code 52	A-62
Camshaft Sensor	
General Description	C1-4
Cam Signal Diagnosis	C1-6
Diagnosis	C4-4
Code 41	A-52
Service	C4-6
Part Information	C1-11
	C4-7
Canister Hoses	C3-3
Canister Purge Solenoid	C3-2
CHART C-3	C3-4
Chart A-1:	
No "Service Engine Soon" Light	A-12
Chart A-2:	
No ALDL Data, Or Will Not Flash Code 12, Or "Service Engine Soon" Light On Steady	A-14
Chart A-3:	
Engine Cranks But Will Not Run	A-16
Chart A-5:	
Fuel Pump Relay Circuit	A-22
Chart A-7:	
Fuel System Pressure Test	A-24
Chart B-1:	
Restricted Exhaust System Check	B-8

SECTION	PAGE
Chart C-1A:	
Park/Neutral Switch Diagnosis	C1-12
Chart C-2A:	
Injector Balance Test	C2-14
Chart C-2C:	
Idle Air Control (IAC) Valve Check	C2-16
Chart C-3:	
Canister Purge Solenoid Check	C3-4
Chart C-4A:	
C3I Misfire At Idle	C4-8
Chart C-4B:	
C3I Misfire Under Load	C4-10
Chart C-5:	
Electronic Spark Control (ESC) System Check	C5-4
Chart C-7:	
Exhaust Gas Recirculation (EGR) Check	C7-4
Chart C-8:	
Torque Converter Clutch (TCC) System Electrical Diagnosis	C8-4
Chart C-10:	
A/C Clutch Circuit Diagnosis	C10-2
Chart C-12A	
Cooling Fan Check	C12-4
Chart C-12B	
Cooling Fan Check (Fan "ON" at all times)	C12-6
Chart C-12C	
Cooling Fan Check (No secondary fan)	C12-8
Chuggle	B-3
Clear Flood Mode	C2-2
Closed Loop	C2-1
Code 12	A-9
Code 13	A-28
Code 14	A-30
Code 15	A-32
Code 21	A-34
Code 22	A-36
Code 23	A-38
Code 24	A-40
Code 25	A-42
Code 31	A-44
Code 32	A-46
Code 33	A-48
Code 34	A-50
Code 41	A-52
Code 42	A-54
Code 43	A-56
Code 44	A-58
Code 45	A-60
Codes 51,52,55	A-62

SECTION	PAGE
Component Locations	A-3
Composite View	A-2
Computer Controlled Coil Ignition (C3I)	
General Description	C4-1
Diagnosis	C4-4
Service	C4-5
CHART C-4A	C4-8
CHART C-4B	C4-10
Code 42	A-54
Part Information	C4-7
Coolant Temperature Sensor	
General Description	C1-2
Diagnosis	C1-6
Service	C1-9
Code 14	A-30
Code 15	A-32
Crankshaft Sensor	
General Description	C1-4
Diagnosis	C4-4
Service	C1-11, C4-5
Part Information	C4-7
Cuts Out	B-5

D

Deceleration Mode	C2-2
Detonation	B-4
Diagnostic Charts	C-1
Diagnostic Circuit Check	A-9
Dieseling	B-6

E

Electronic Control Module (ECM)	
General Description	C1-1
Function	C1-2
Diagnosis	C1-5
Connector Terminal End View	A-8
Service	C1-7
Wiring Diagram	A-4
Parts Information	C1-11
Code 55	A-62
Electric Cooling Fan	
General Description	C12-1
Diagnosis	C12-1
Service	C12-2
Parts Information	C12-2
CHART C-12A	C12-4
CHART C-12B	C12-6
CHART C-12C	C12-8

SECTION	PAGE
Engine Cranks But Will Not Run	A-16
Electronic Spark Control (ESC)	C5-1
General Description	C5-1
Diagnosis	C5-1
Service	C5-1
CHART C-5	C5-4
Code 43	A-56
EST/Ignition System	C4-1
Code 42	A-54
Evaporative Emission Control System (EECS)	
General Description	C3-1
Diagnosis	C3-2
Service	C3-3
Parts Information	C3-3
Exhaust Emissions Excessive (Odors)	B-6
Exhaust Gas Recirculation (EGR) System	
General Description	C7-1
EGR Valve Identification	C7-1
Diagnosis	C7-2
Service	C7-2
EGR Control Solenoid	C7-3
Parts Information	C7-3
Code 32	A-46
CHART C-7	C7-4
Exhaust System Check Restricted	B-8

F

Fuel Metering System	
General Description	C2-1
Diagnosis	C2-5
Service	C2-6
Parts Information	C2-12
Torque Specifications	C2-12
Fuel Cutoff Mode	C2-2
Fuel Injectors	C2-3
Fuel Pressure Relief Procedure	C2-6
Fuel Pump Electrical Circuit	C2-3
Fuel Pump Relay	A-22, C2-6
Fuel Rail Assembly	C2-3, C2-6
Fuel System Diagnosis	A-22
Fuel System Pressure Test	A-24, C2-5
Fuel Tank Pressure Control Valve	C3-2
Fuel Vapor Canister	C3-1

SECTION	PAGE
G	
General Description	6E3-5
H	
Hard Start	B-2
Hesitation	B-3
I	
Idle Air Control (IAC) Valve Check	C2-16
Idle Air Control Valve	C2-4
Diagnosis	C2-5
Service	C2-10
Ignition System/(EST)	
General Description	C4-1
Diagnosis	C4-4
Service	C4-5
CHART C-4A	C4-8
CHART C-4B	C4-10
Incorrect Idle	B-7
Information Sensors	C1-2
Injector Balance Test	C2-14
Intermittents	B-2
Introduction	6E3-5
K	
Knock Sensor	
General Description	C1-4
Diagnosis	C1-6
Service	C1-11
	C5-1
Parts Information	C5-2
L	
Lack Of Power	B-4
Light, Service Engine Soon	A-9
Light, Service Engine Soon (Diagnosis)	A-12
M	
MAF Sensor	C1-2
General Description	C1-2
Diagnosis	C1-6
Service	C1-9
Code 33	A-48
Code 34	A-50
MAT Sensor	C1-3
General Description	C1-3
Diagnosis	C1-6
Service	C1-10
Code 23	A-38
Code 25	A-42
Minimum Idle Speed Adjustment	C2-11
Misses	B-5
N	
No "Service Engine Soon" Light	A-12
No ALDL Data	A-14
O	
Odors From Exhaust System	B-6
Oil Pressure Switch	C2-6
Open Loop	C2-2
Oxygen (O_2) Sensor	
General Description	C1-3
Diagnosis	C1-6
Service	C1-10
Code 13	A-28
Code 44	A-58
Code 45	A-60
Parts Information	C1-11
P	
Park/Neutral Switch	
General Description	C1-4
Diagnosis	C1-6
Service	C1-11
CHART C-1A	C1-12
Poor Fuel Economy	B-6
Positive Crankcase Ventilation (PCV)	
General Description	C13-1
Diagnosis	C13-2
Service	C13-2
Parts Information	C13-2
Preliminary Checks	B-1
Prom	
General Description	C1-2
Diagnosis	C1-5
Service	C1-7
Functional Check	C1-8
Code 51	A-62
Parts Information	C1-11

SECTION	PAGE
R	
Rough Idle	B-7
Run Mode	C2-2
Run On	B-6
S	
Sag	B-3
"Scan" Data	A-9
Sensor Information	C1-2, C1-11
"Service Engine Soon" Light on Steady	A-14
Sluggish	B-4
Spark Knock	B-4
Spongy	B-4
Stalling	B-7
Starting Mode	C2-1
Stumble	B-3
Surges	B-3
T	
TCC Solenoid	C8-1
Throttle Body Unit	
General Description	C2-4
Service	C2-8, C2-11
Parts Information	C2-12
Throttle Position Sensor	
General Description	C1-3, C2-5
Diagnosis	C1-6
Service	C1-10, C2-9 C2-11
Code 21	A-34
Code 22	A-36
Parts Information	C1-11, C2-12
Torque Converter Clutch (TCC) System	
General Description	C8-1
Diagnosis	C8-2
Service	C8-2
Parts Information	C8-2
CHART C-8	C8-4
U	
Unstable Idle	B-7
V	
Vehicle Speed Sensor	
General Description	C1-4
Diagnosis	C1-6
Code 24	A-40
Parts Information	C1-10
W	
Wastgate Solenoid	
Code 31	A-44
Wiring Diagrams	A-4
Will Not Flash Code 12	A-14

SECTION 6F

EXHAUST SYSTEM

NOTICE: All new GM vehicles are certified by the United States Environmental Protection Agency as conforming to the requirements of the regulations for the control of air pollution from new motor vehicles. This certification is contingent on certain adjustments being set to factory standards, thus, these adjustment points either have been permanently sealed and/or made inaccessible to prevent indiscriminate adjustment in the field. For this reason, the factory procedure for temporarily removing plugs, caps, etc., for the purpose of servicing the product must be strictly followed and, where practical, returned to the original intent of the design.

NOTICE: Exhaust system components must have enough clearance from the underbody to prevent overheating of the floor pan and possible damage to the passenger compartment, insulation and trim materials.

The following "Notice" applies to one or more steps in the assembly procedure of components in this portion of the manual as indicated at appropriate locations by the terminology "NOTICE: See "Notice" on page 6F-1 of this section."

NOTICE: When fasteners are removed, always reinstall them at the same location from which they were removed. If a fastener needs to be replaced, use the correct part number fastener for that application. If the correct part number fastener is not available, a fastener of equal size and strength (or stronger) may be used. Fasteners that are not reused, and those requiring thread locking compound will be called out. The correct torque value must be used when installing fasteners that require it. If the above conditions are not followed, parts or system damage could result.

CONTENTS

General Description 6F-1
On-Vehicle Service 6F-1
Exhaust Pipe 6F-1
Exhaust Flex Coupling 6F-1
Crossover Pipe 6F-2
Catalytic Converter 6F-3
Adapter 6F-3
Tailpipe Extension 6F-4
Complete Exhaust System 6F-4
Exhaust-to-Body Clearance 6F-4
Specifications 6F-4

GENERAL DESCRIPTION

The exhaust system is a single converter, single muffler system. A crossover pipe routes exhaust gases from the left exhaust manifold to the right exhaust manifold, which is connected to the turbocharger. Exhaust gases leave the turbocharger through an exhaust pipe to the catalytic converter. An intermediate pipe runs from the converter to the dual tailpipe muffler. A chrome tailpipe extension is welded to each of the muffler tailpipes.

ON-VEHICLE SERVICE

EXHAUST PIPE

Figure 1

Remove or Disconnect

1. Bolts (1) and springs (2).
2. Exhaust pipe (4) from the turbocharger assembly (3).
- Raise and suitably support vehicle as described in the 1989 Firebird Service Manual.
3. Nuts (14) and clamp (15) at exhaust flex coupling (16).
4. Exhaust pipe (4) from the exhaust flex coupling (16).

Install or Connect

NOTICE: See "Notice" on page 6F-1 of this section.

1. Exhaust pipe (4) to the exhaust flex coupling (16).
2. Clamp (15) and nuts (14) at exhaust flex coupling (16).

Tighten

- Nuts (14) to 35 N·m (26 lb. ft.).
- Lower vehicle.
3. Springs (2) and bolts (1) at turbocharger assembly (3).

Tighten

- Bolts (1) to 30 N·m (22 lb. ft.).

EXHAUST FLEX COUPLING

Figure 1

Remove or Disconnect

- Raise and suitably support vehicle as described in the 1989 Firebird Service Manual.
1. Nuts (5) and clamp (6) at converter (7).

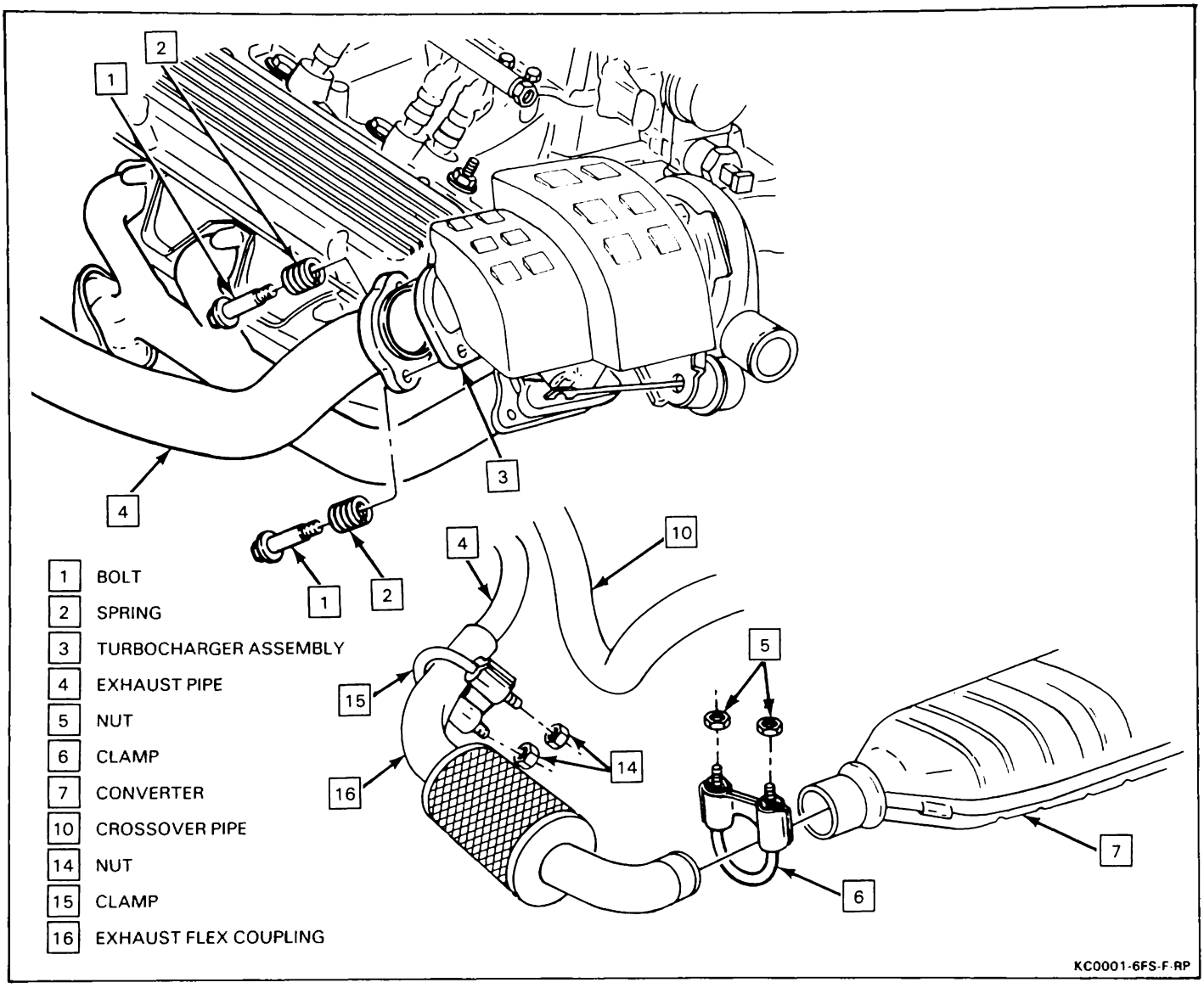

Figure 1 — Exhaust Pipe

2. Nuts (14) and clamp (15) at exhaust pipe (4).
3. Exhaust flex coupling (16).

Install or Connect

NOTICE: See "Notice" on page 6F-1 of this section.

1. Exhaust flex coupling (16).
2. Clamp (15) and nuts (14) at exhaust pipe (4).

Tighten

- Nuts (14) to 35 N·m (26 lb. ft.)

3. Clamp (6) and nuts (5) at converter (7).

Tighten

- Nuts (5) to 35 N·m (26 lb. ft.)

- Lower vehicle.

CROSSOVER PIPE

Figure 2

Remove or Disconnect

- Raise and suitably support vehicle as described in the 1989 Firebird Service Manual.

1. Nuts (8) and bolts (9) attaching the crossover pipe (10) to the exhaust manifolds.
2. Crossover pipe (10).

Install or Connect

1. Crossover pipe (10) to exhaust manifolds.

NOTICE: See "Notice" on page 6F-1 of this section.

2. Nuts (8) and bolts (9) attaching the crossover pipe (10) to the exhaust manifolds.

Tighten

- Nuts (8) or bolts (9) to 31 N·m (23 lb. ft.)
- Lower vehicle.

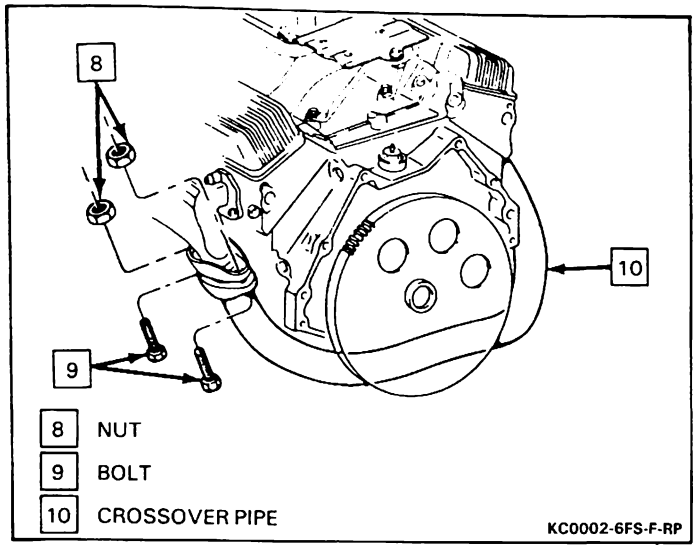

Figure 2 — Crossover Pipe

CATALYTIC CONVERTER

Figures 1 and 3

Remove or Disconnect

- Raise and suitably support vehicle as described in the 1989 Firebird Service Manual.

1. Nuts (14) and clamp (15).
2. Exhaust flex coupling (16) from converter (7).
3. Nuts (11) from studs at intermediate pipe (12).
4. Bolts (17) from adapter (18).
5. Converter (7) from adapter (18) at intermediate pipe (12).

Install or Connect

NOTICE: See "Notice" on page 6F-1 of this section.

1. Converter (7) to adapter (18) at intermediate pipe (12).
2. Bolts (17) to adapter (18).

   Tighten

   - Bolts (17) to 52 N·m (38 lb. ft.).
3. Nuts (11) to studs at intermediate pipe (12).

   Tighten

   - Nuts (11) to 20 N·m (15 lb. ft.).
4. Exhaust flex coupling (16) to converter (7).
5. Clamp (15) and nuts (14).

   Tighten

   - Nuts (14) to 35 N·m (26 lb. ft.).
- Lower vehicle.

ADAPTER

Figure 3

Remove or Disconnect

1. Nuts (11) from studs.
2. Bolts (17) from adapter (18).
3. Converter hanger bracket bolts from adapter (18).
4. Adapter (18).

Install or Connect

NOTICE: See "Notice" on page 6F-1 of this section.

1. Adapter (18).
2. Converter hanger bracket bolts.

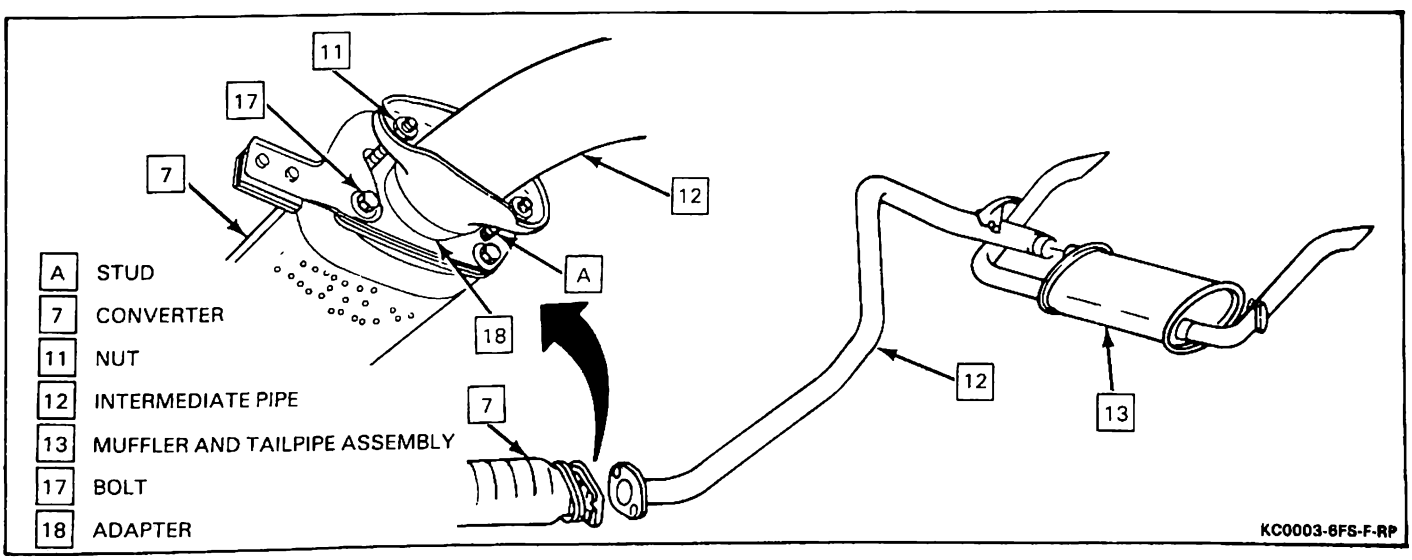

Figure 3 — Intermediate Pipe

Tighten

- Converter hanger bracket bolts to 35 N·m (26 lb. ft.).

3. Bolts (17).

Tighten

- Bolts (17) to 52 N·m (38 lb. ft.).

4. Nuts (11).

Tighten

- Nuts (11) to 20 N·m (15 lb. ft.).

TAILPIPE EXTENSION

Remove or Disconnect

1. Muffler and tailpipe assembly as described in the 1989 Firebird Service Manual.
2. Tailpipe extension by cutting off at the point where the extension meets the tailpipe.

Install or Connect

1. Tailpipe extension by pressing it onto the tailpipe until tight and welding it into place.
2. Muffler and tailpipe assembly as described in the 1989 Firebird Service Manual.

COMPLETE EXHAUST SYSTEM

Remove or Disconnect

1. Muffler and tailpipe assembly as described in the 1989 Firebird Service Manual.
2. Intermediate pipe as described in the 1989 Firebird Service Manual.
3. Catalytic converter. Refer to "Catalytic Converter" in this section.
4. Exhaust flex coupling. Refer to "Exhaust Flex Coupling" in this section.
5. Exhaust pipe. Refer to "Exhaust Pipe" in this section.

Install or Connect

1. Exhaust pipe. Refer to "Exhaust Pipe" in this section.
2. Exhaust flex coupling. Refer to "Exhaust Flex Coupling" in this section.
3. Catalytic converter. Refer to "Catalytic Converter" in this section.
4. Intermediate pipe as described in the 1989 Firebird Service Manual.
5. Muffler and tailpipe assembly as described in the 1989 Firebird Service Manual.

EXHAUST-TO-BODY CLEARANCE

For exhaust-to-body clearance specifications at the flex coupling, refer to Figure 4. For all other exhaust-to-body clearance specifications, refer to the 1989 Firebird Service Manual.

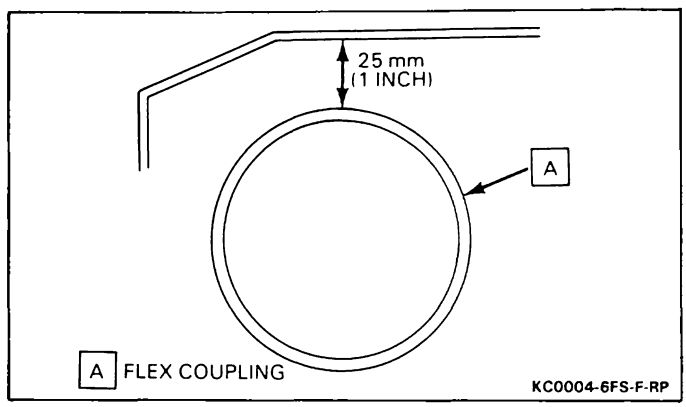

Figure 4 — Exhaust-to-Body Clearance

SPECIFICATIONS

FASTENER TORQUE SPECIFICATIONS

Exhaust Pipe-to-Exhaust Flex Coupling Nut	35 N·m (26 lb. ft.)
Exhaust Flex Coupling-to-Converter Clamp Nut	35 N·m (26 lb. ft.)
Exhaust Pipe-to-Turbocharger Assembly Bolt	30 N·m (22 lb. ft.)
Intermediate Pipe-to-Adapter Nut	20 N·m (15 lb. ft.)
Crossover Pipe-to-Exhaust Manifold Bolt/Nut	31 N·m (23 lb. ft.)
Converter Hanger Bracket Bolt	35 N·m (26 lb. ft.)
Adapter-to-Converter Bolt	52 N·m (38 lb. ft.)

SECTION 6J

TURBOCHARGER

The following "Notice" applies to one or more steps in the assembly procedure of components in this portion of the manual as indicated at appropriate locations by the terminology "NOTICE: See "Notice" on page 6J-1 of this section."

NOTICE: When fasteners are removed, always reinstall them at the same location from which they were removed. If a fastener needs to be replaced, use the correct part number fastener for that application. If the correct part number fastener is not available, a fastener of equal size and strength (or stronger) may be used. Fasteners that are not reused, and those requiring thread locking compound will be called out. The correct torque value must be used when installing fasteners that require it. If the above conditions are not followed, parts or system damage could result.

CONTENTS

General Description 6J-1
Turbocharger 6J-1
Intercooler 6J-2
Maintenance 6J-2
Diagnosis 6J-3
Noise and Air Leak Check 6J-3
Turbocharger Inspection 6J-3
On-Vehicle Service 6J-7
Turbocharger 6J-7
Wastegate Actuator 6J-9
Intercooler 6J-10
Intercooler Duct 6J-10
Wastegate/Boost Pressure Test Procedure 6J-12
Road Test 6J-12
Turbocharger Internal Inspection Procedure .. 6J-12
Specifications 6J-13
Special Tools 6J-13

GENERAL DESCRIPTION

TURBOCHARGER

Figures 1 through 3

The turbocharger is basically an air compressor or air pump. Its major parts include a turbine wheel (6), shaft (5), compressor wheel (4), turbine housing (1), compressor housing (3) and center housing (2). The center housing (2) contains a turbine seal (12), compressor seal (11) and bearings.

The internal combustion engine is an air-breathing machine. The amount of power obtained is determined by the amount of air the engine breathes in a certain

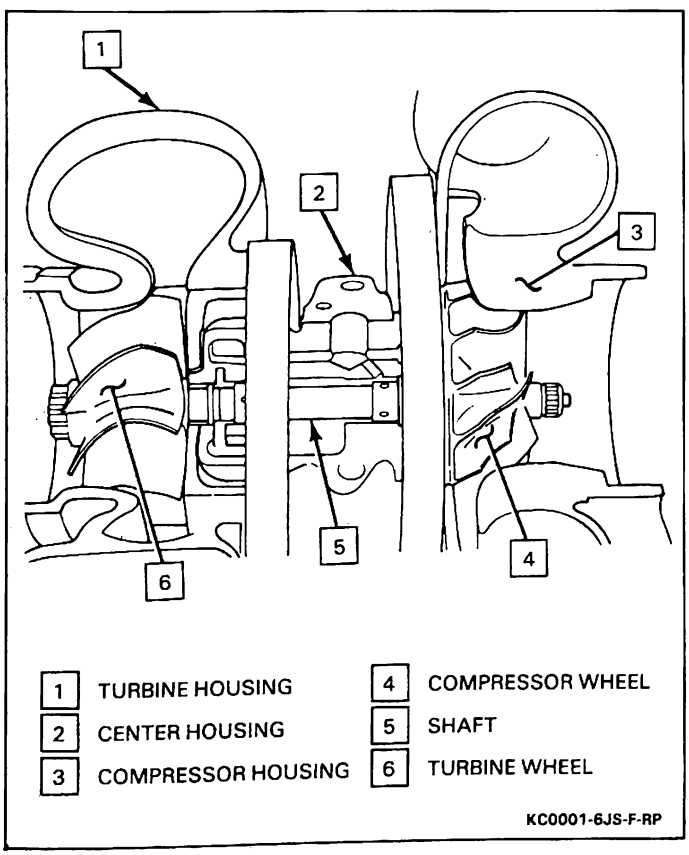

Figure 1 — Turbocharger

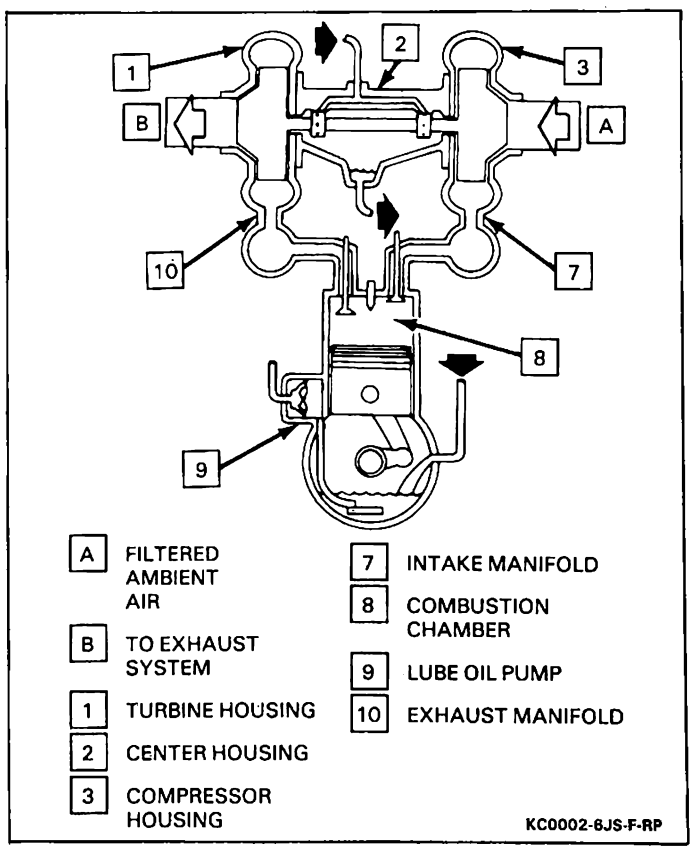

Figure 2 — Turbocharger Operation

period of time, not by the amount of fuel it uses. Air must mix with fuel to complete the combustion cycle. When the air/fuel ratio reaches a certain point, additional fuel will not produce more power, only black smoke: the more dense the smoke, the more the engine is being overfueled.

The turbocharger increases the quantity and density of air in the engine combustion chambers (8). The increased volume of air allows more fuel to be used while maintaining the proper air/fuel ratio. The increased air and fuel allows the engine to produce more horsepower than a non-turbocharged engine.

The turbocharger uses the normally wasted energy in the engine exhaust gas. As load on the engine is increased and the throttle is opened, more air/fuel mixture flows into the combustion chambers (8). The increased flow is burned and produces a larger volume of exhaust gas. The gas enters the exhaust manifolds (10), flows through the turbocharger turbine housing (1) and turns the turbine wheel (6) and shaft (5). The shaft (5) is coupled to the compressor wheel (4). The compressor wheel (4) compresses the air it receives and sends it to the intake manifold (7). The higher pressure in the intake manifold (7) allows a denser charge to enter the combustion chambers (8).

Intake manifold pressure, or boost, is controlled by an exhaust bypass valve, or wastegate. The wastegate is operated by a spring-loaded diaphragm type actuator that responds to boost pressure. The actuator, which is controlled by the wastegate solenoid, opens the wastegate to allow exhaust gases to bypass the turbine wheel (6) so that the correct boost level is maintained. The wastegate solenoid is controlled by the electronic control module (ECM). For diagnostic and service procedures of the ECM, refer to DRIVEABILITY AND EMISSIONS — GENERAL INFORMATION (SEC. 6E) of this supplement.

NOTICE: A turbocharged engine is a finely tuned assembly. Any alteration to the air intake or exhaust system that upsets the air flow balance may result in serious damage to the engine.

The rotating assembly in the turbocharger can reach speeds of 130,000 to 140,000 rpm. An adequate supply of clean engine oil is essential for cooling and lubrication. Any time a basic engine bearing has been damaged or the turbocharger is replaced, the oil and oil filter should be changed and the turbocharger flushed with clean engine oil.

NOTICE: Interruption or contamination of the oil supply to the turbocharger bearings can result in major turbocharger damage.

INTERCOOLER

Before entering the combustion chambers, the air from the turbocharger is routed through an air-to-air intercooler. When the turbocharger compresses air, its temperature rises. The heated, compressed air then flows through the intercooler core where it is cooled by outside air passing through the intercooler. The cooler, denser air allows a denser air/fuel charge to enter the combustion chambers.

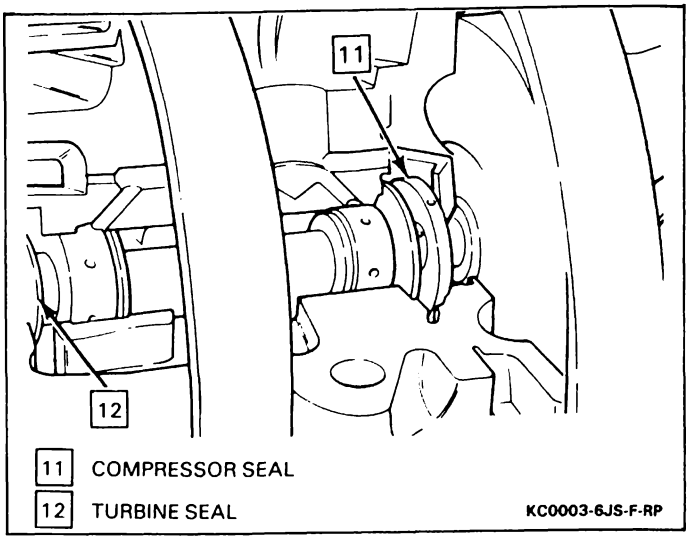

Figure 3 — Seals

A crankshaft-mounted fan pulls air through the intercooler to increase intercooler efficiency at low vehicle speeds.

MAINTENANCE

Good maintenance practices must be followed to maintain the service life and performance of the turbocharger. Turbocharger failures are most often caused by oil lag, restriction or lack of oil flow, dirty oil, or foreign objects entering the turbocharger.

1. Do not allow dust, sand or other foreign material to enter the turbocharger. Dust or sand entering the compressor housing from a leaky air inlet system can erode the compressor wheel blades. Uneven blade wear can produce shaft motion that can cause bearing failure. Dust and sand also wears engine parts. Large or heavy objects will completely destroy the turbocharger and may cause severe damage to the engine. Soft materials, such as towels or rubber items, will roll the blades backward. If a turbocharger fails due to foreign material, a thorough cleaning of the air and exhaust systems is necessary. No foreign objects should be in the piping, and all connections must be secure.
2. The air cleaner system must be properly maintained. A plugged or restricted air cleaner system will reduce air pressure and volume at the compressor air inlet. The air pressure drop will lower turbocharger performance and can cause oil pullover during idle. Oil pullover is a compressor end oil seal leak without seal part failure.
3. The lube oil system must be properly serviced. When dirt or foreign material is introduced into the turbocharger bearing system by lube oil, the center housing bearing bore surfaces will wear. Contaminants act as an abrasive cutting tool and eventually wear through the bearing surfaces. When bearing and bore wear become excessive, the shaft hub and wheels may rub on the housings. The rubbing will cause the assembly to turn more slowly than it should, and turbocharger and engine performance will rapidly deteriorate. Excessive

noise or smoke and oil at either end of the turbocharger may be noted. Oil contamination must be corrected before a new turbocharger is installed. Do not assume that the oil filter will remove contaminants before they reach the turbocharger. Oil will completely bypass the oil filter if the filter is clogged, the bypass valve is open or the filter element is ruptured or improperly installed.

4. Do not allow sludge to build up in the turbocharger. Sludge accumulates in engine oil when oil oxidation or breakdown occur. Primary causes are engine overheating, excessive combustion products from piston blow-by, non-compatible oils, engine coolant leakage into the oil, incorrect grade or quality of oil and improper oil change intervals. When the turbocharger shaft spins, oil is thrown against the center housing inner walls. Any sludge particles in the oil will stick to the walls. Sludge deposits at the turbine end may become baked, or coked. The hard coke can flake off and wear the turbine end journal and bearing and bore, but usually the turbine seal will leak first. If turbine end oil leakage is noted, check the turbocharger oil drain tube and crankcase breathers. Remove any restrictions and check again for leaks. If turbine end leakage is still noted, check for sludge buildup on the shaft between bearing journals and in the center housing. Correct as necessary. If sludge deposits are found, the engine oil and filter must be changed.
5. Never operate the turbocharger under engine load conditions with less than 207 kPa (30 psi) oil pressure. Oil pressure and flow lag during engine starting can cause damage to the turbocharger bearings. Oil lag most often occurs after engine oil and filter are changed, if the engine has not been operated for a long time, or when cold weather causes the oil to congeal. When changing the engine oil filter, prime the new filter with clean engine oil before installation. The turbocharger also must be primed whenever oil lag is possible and after every oil change. Before allowing the engine to start, disconnect the electrical connectors at the computer controlled coil ignition (C^3I) and crank the engine until steady oil pressure is observed. Install the (C^3I) module and fuel pump relay electrical connectors. Turbocharger bearing damage can occur if oil lag exceeds 30 seconds, and sooner if the engine accelerates beyond low idle speed.

DIAGNOSIS

CAUTION: Operation of the turbocharger without all normally installed inlet ducts and filters connected may permit foreign objects to enter the turbocharger, causing personal injury and vehicle damage.

Important

- To gain familiarity and skills for inspecting a turbocharger, examine a new turbocharger as outlined. Compare inspection results between the new and used turbocharger.

A turbocharger does not change the basic operating characteristics of an engine. It cannot correct or overcome malfunctions in the engine fuel system, timing, air cleaner or other systems. If a turbocharged engine system malfunctions and the turbocharged has been determined operational, proceed with engine diagnosis.

Always inspect the turbocharger before removing it from the engine.

NOISE AND AIR LEAK CHECK

Figure 4

With the engine running, check the turbocharger for uneven noise and vibration, which indicates a shaft wheel assembly malfunction. If suspicious conditions are noted, shut down the engine immediately to protect the turbocharger and engine from further damage.

Examine the turbocharger. Refer to "Turbocharger Inspection" in this section. If any damage is evident, the turbocharger must be removed, cleaned and repaired or replaced as necessary.

If the turbocharger is assumed to be functional, proceed with a check of the air system. Refer to Figure 4.

Exhaust gas leakage between engine block and inlet to turbocharger will also create a noise level change and reduced turbocharger performance. Check the exhaust system. Refer to Figure 4.

TURBOCHARGER INSPECTION

Figures 4 through 11

Inspect

- Remove inlet and exhaust tubing from the turbocharger.

1. Both wheels for blade damage.
   - The compressor wheel can be seen through the compressor inlet opening while holding the throttle blade open.
   - Using a light, look between the turbine wheel blades from the exhaust outlet end of the turbine housing to examine the turbine wheel blade tips.
2. Outer blade tip edges next to the housing bores for wheel rub.
3. Shaft for drag, bind or rub.
   - Rotate the shaft wheel assembly by hand and feel for drag or bind.
   - Push shaft side-to-side and rotate to feel for rub. It should turn smoothly.
4. Shaft for excessive journal clearance.
   - Lift both ends of the shaft up and down at the same time. If clearance is normal, little shaft movement will be felt.
5. Oil drain line for restrictions and turbine housing exterior for traces of burned oil.
6. Shaft between bearing journals and center housing for sludge buildup.

TURBOCHARGER TROUBLESHOOTING

PROBLEM: Engine lacks power	Black exhaust smoke	Excessive engine oil consumption	Blue exhaust smoke	Turbocharger noisey	Cyclic sound from turbocharger	Oil leak from compressor seal	Oil leak from turbine seal	CAUSE	REMEDY
▲				▲				Clogged air filter element	Replace element
	▲	▲	▲	▲	▲	▲		Obstructed air intake duct to turbo compressor	Remove obstruction or replace damaged parts as required
▲	▲			▲				Obstructed air outlet duct from compressor to intake manifold	Remove obstruction or replace damaged parts as required
▲	▲			▲				Obstructed intake manifold	Refer to engine mechanical section & remove obstruction
				▲				Air leak in duct from air cleaner to compressor	Correct leak by replacing seals or tightening fasteners as required
▲	▲	▲	▲	▲				Air leak in duct from compressor to intake manifold	Correct leak by replacing seals or tightening fasteners as required
▲	▲	▲	▲	▲				Air leak at intake manifold to engine joint	Refer to engine mechanical section & replace gaskets or tighten fasteners as required
▲	▲	▲	▲	▲		▲		Obstruction in exhaust manifold	Refer to engine mechanical section & remove obstruction
▲	▲					▲		Obstruction in exhaust system	Remove obstruction or replace faulty components as required
▲	▲					▲		Gas leak in exhaust manifold to engine joint	Refer to engine mechanical section & replace gaskets or tighten fasteners as required
▲	▲			▲		▲		Gas leak in turbine inlet to exhaust manifold joint	Replace gasket or tighten fasteners as required
				▲				Gas leak in ducting after the turbine outlet	Refer to engine mechanical section & repair leak
		▲	▲			▲	▲	Obstructed turbocharger oil drain line	Remove obstruction or replace line as required
		▲	▲			▲	▲	Obstructed engine crankcase ventilation	Refer to engine mechanical section, clear obstruction
		▲	▲			▲	▲	Turbocharger center housing sludged or coked	Change engine oil & oil filter, overhaul or replace turbo as required
▲	▲							Engine camshaft timing incorrect	Refer to engine mechanical section
▲	▲	▲	▲			▲	▲	Worn engine piston rings or liners (blowby)	Refer to engine mechanical section
▲	▲	▲	▲			▲	▲	Internal engine problem (valves, pistons)	Refer to engine mechanical section.
▲	▲	▲	▲	▲	▲	▲	▲	Dirt caked on compressor wheel and/or diffuser vanes	Clean using a Non-Caustic cleaner & Soft Brush. Find & correct source of unfiltered air & change engine oil & oil filter
▲	▲	▲	▲	▲	▲	▲	▲	Damaged turbocharger	Analyze failed turbocharger, find & correct cause of failure, overhaul or replace turbocharger as required

KC0011-6JS-F-RP

Figure 4 — Turbocharger Troubleshooting

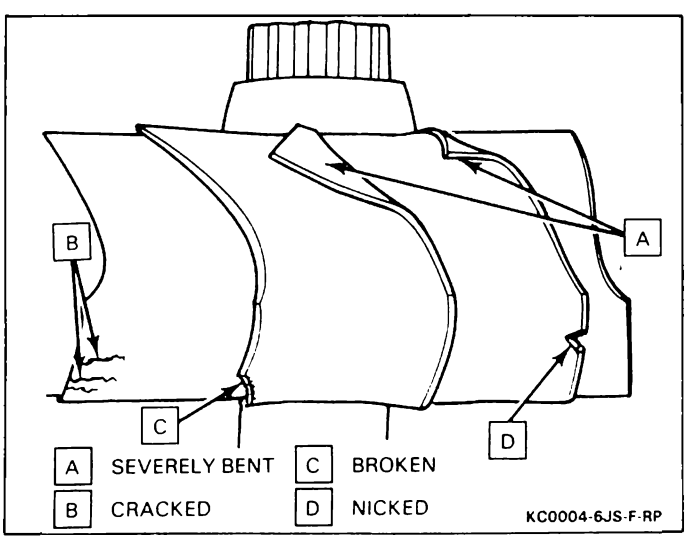

Figure 5 — Blade Damage From Foreign Material

- If sludge buildup is found, the engine oil and filter must be changed.

7. Turbine wheel for burned oil.
8. Air and exhaust systems for loose connections or cracks.
9. Bearings for wear or contamination, if the turbocharger is being disassembled.

- If the shaft assembly and wheel blades are normal, then the turbocharger should be serviceable.
- If any damage or abnormal conditions are found, replace the turbocharger.

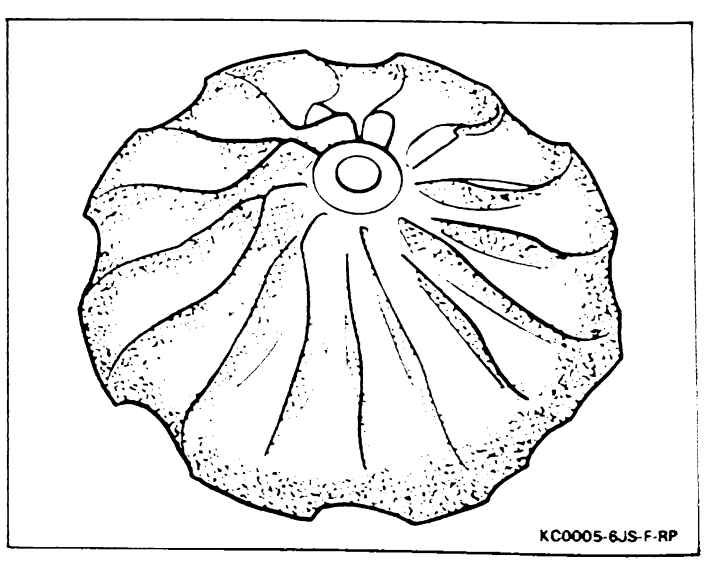

Figure 6 — Extreme Sand Erosion

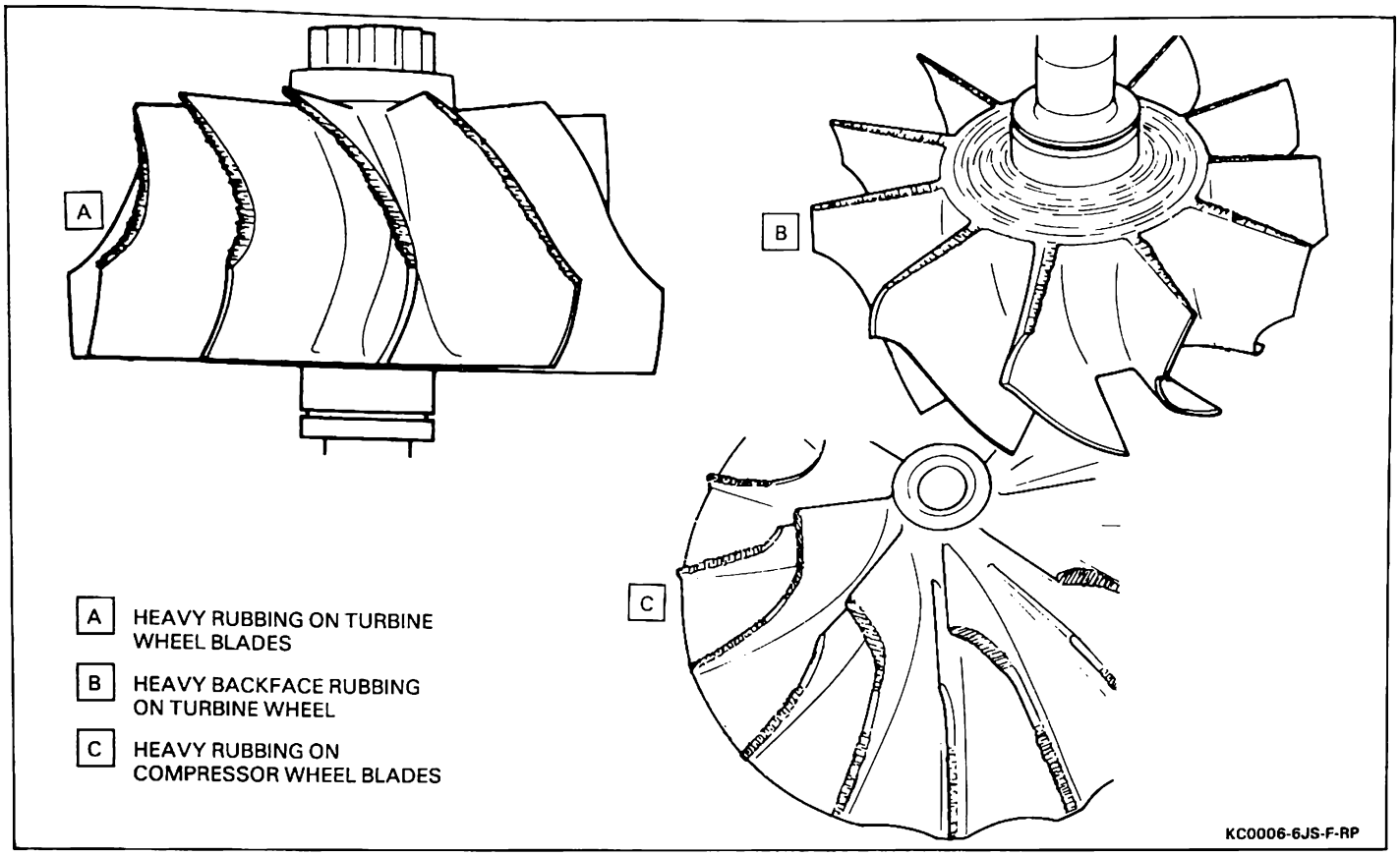

Figure 7 — Wheel Rub

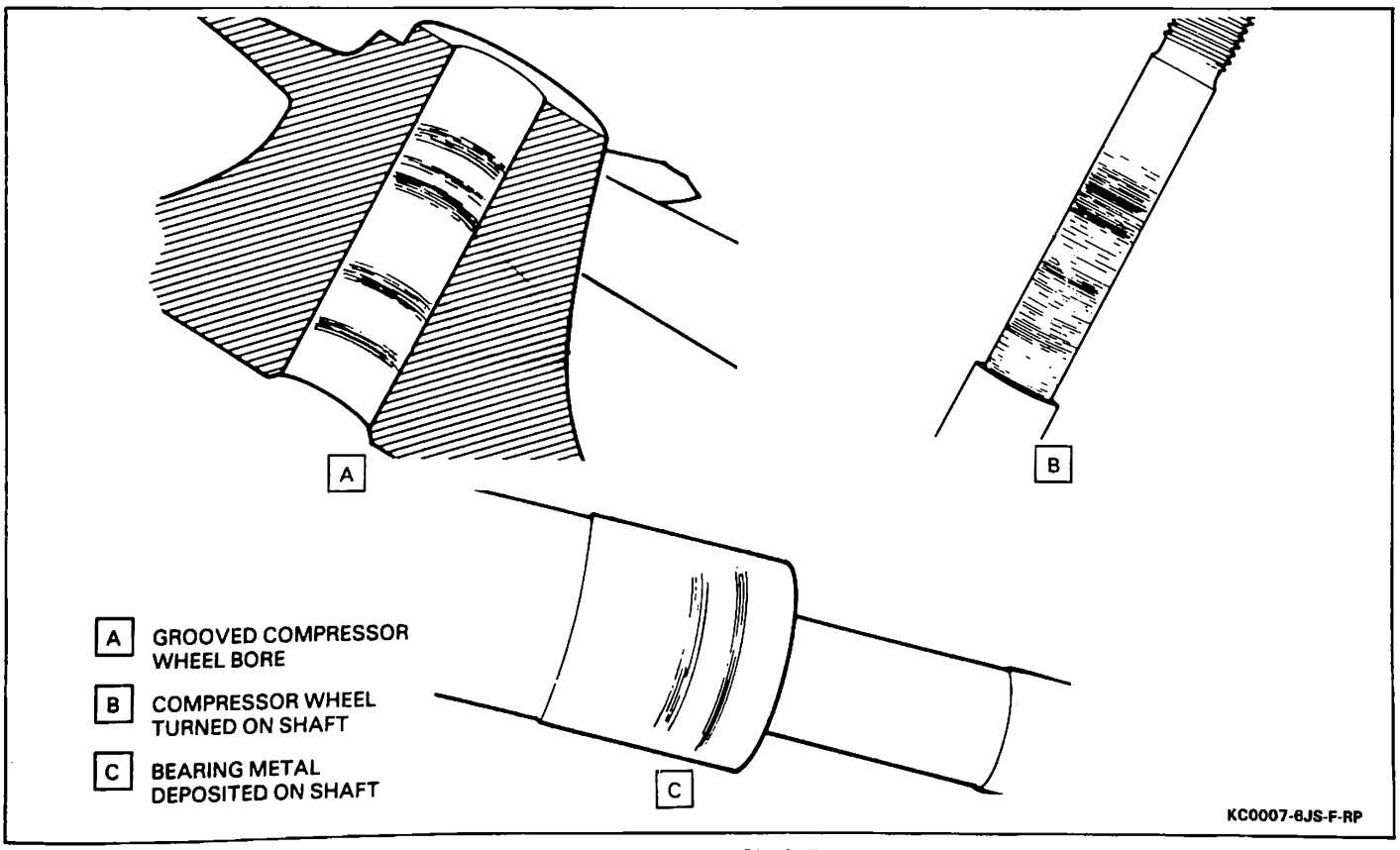

Figure 8 — Bore and Shaft Damage

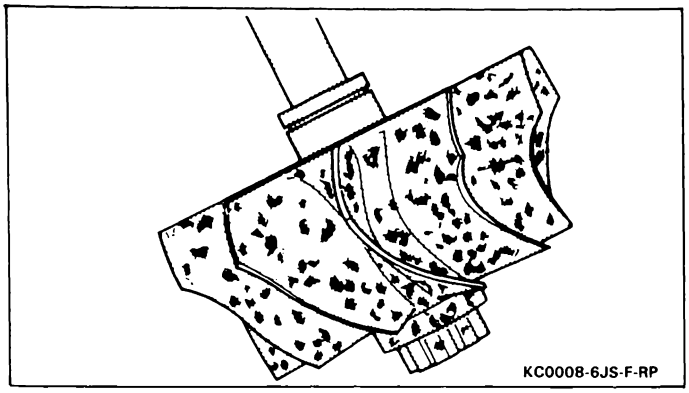

Figure 9 — Burned Oil on Turbine Wheel

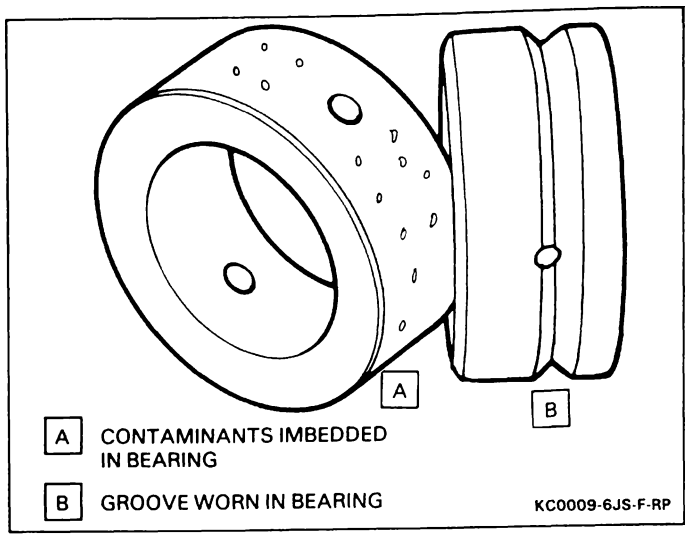

Figure 10 — Bearing Damage

BEARING TROUBLESHOOTING

APPEARANCE OF BEARING												CONDITION	PROBABLE CAUSE
Slight wear or scratches	Moderate to heavy grooving on O.D. only	Moderate to heavy grooving on O.D. & I.D.	Extruded, or pounded. (May be stuck in ctr. hsg.)	Smooth undersized O.D.	Cracked or broken	Deep groove around center of O.D.	Oil holes fully or partially closed	Oil Holes plugged with carbon	Polished looking O.D.	I.D. polished & worn oversize	Melted (aluminum bearing)		
●												Normal use	Acceptable operating & maintenance procedures
	●											Contaminated oil (dirt in oil)	Engine oil & oil filter(s) not changed frequently enough, unfiltered air entering engine intake, malfunction in prelube valve or oil filter bypass valve
		●				●						Severely contaminated (dirty oil)	
			●		●		●					Pounded by eccentric shaft motion	Foreign object damage, coked or loose housing, excessive bearing clearance due to lube problem
				●					●			Center housing bearing bores, rough finish	Incorrect cleaning of center housing during overhaul of turbocharger (wrong chemicals, bores sand or bead blasted)
						●						Metal or large particle oil contamination	Severe engine wear (bearing damage, camshaft or lifter wear, broken piston)
							●				●	Lack of lube, oil lag, insufficient lube	Low oil level, high speed shutdowns, lube system failure, turbocharger plugged
								●				Coking	Hot shutdowns, engine overfueled, restricted or leaking air intake
				●					●	●		Fine particles in oil (contaminated oil)	See contaminated oil
										●		Rough bearing journals on shaft	Bearing journals not protected from sand or bead blast cleaning during overhaul

KC0010-6JS-F-RP

Figure 11 — Bearing Troubleshooting

ON-VEHICLE SERVICE

TURBOCHARGER

Figures 12 through 16

Remove or Disconnect

1. Crankcase vent pipe hose from the inlet air adapter (32).
   - Relieve tension on forward hose clamp and pull hose from inlet air adapter (32).
2. Nuts (31) from the inlet air adapter (32).
3. Inlet air adapter (32) from the turbocharger (16).
- Loosen hose clamp (47) at turbocharger compressor outlet pipe.
4. Compressor outlet pipe hose (46) from the turbocharger (16).
- Loosen hose clamp at turbocharger air inlet.
5. Turbocharger air inlet tube hose from the turbocharger (16).
6. Bolts (14) retaining the turbocharger heat shield (13) to the mounting bracket (15).
7. Turbocharger heat shield (13) from the mounting bracket (15).
8. Bolt (19) retaining elbow heat shield (20) to the mounting bracket (15).
9. Elbow heat shield (20) from the mounting bracket (15).
10. Bolts (21) with springs (22) retaining the exhaust pipe (25) to the turbocharger (16).
11. Exhaust pipe (25) from the turbocharger (16).
12. Oil feed pipe (26) from fitting at turbocharger (16).
13. Nuts (23) and studs (24) retaining exhaust manifold (10) to turbocharger (16).
14. Bolts (29) from the oil drain pipe (27) at the turbocharger (16).
15. Oil drain pipe (27) and gasket from the turbocharger (16).
16. Vacuum lines from the wastegate actuator and turbocharger outlet.
17. Bolts (18) holding mounting bracket (15) to the engine.
18. Mounting bracket (15) with turbocharger (16) from the engine.
19. Nuts (17) holding turbocharger (16) to the mounting bracket (15).

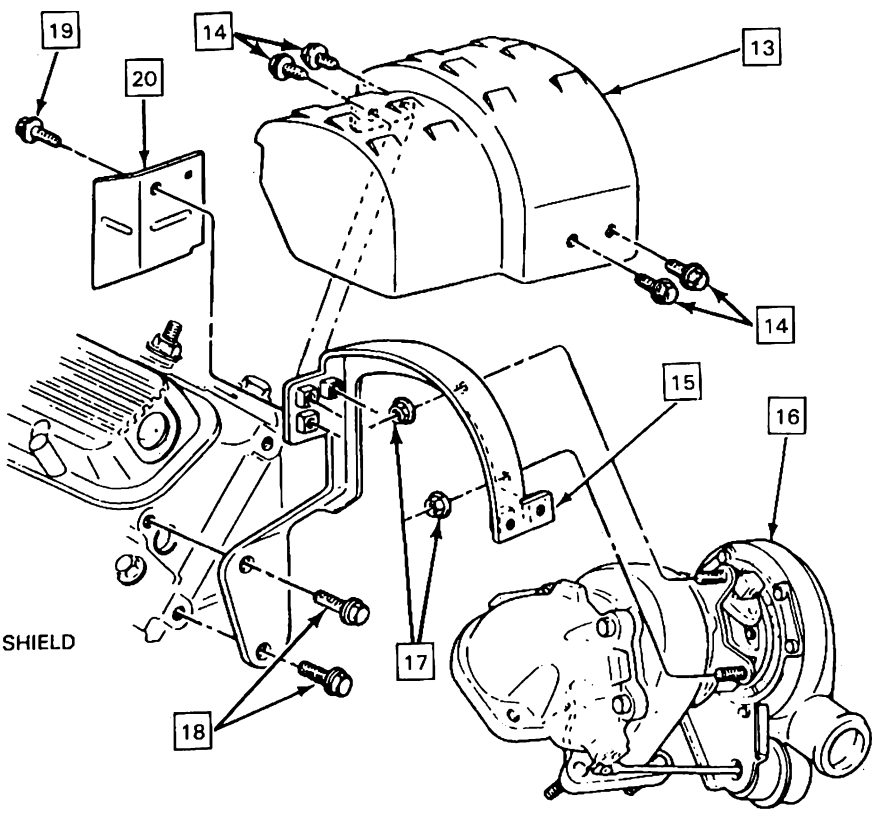

13 TURBOCHARGER HEAT SHIELD
14 BOLT
15 MOUNTING BRACKET
16 TURBOCHARGER
17 NUT
18 BOLT
19 BOLT
20 ELBOW HEAT SHIELD

KC0012-6JS-F-RP

Figure 12 — Turbocharger Removal

10 EXHAUST MANIFOLD
16 TURBOCHARGER
21 BOLT
22 SPRING
23 NUT
24 STUD
25 EXHAUST PIPE

KC0013-6JS-F-RP

Figure 13 — Exhaust Pipe to Turbocharger

26 OIL FEED PIPE
27 OIL DRAIN PIPE
28 OIL PRESSURE SWITCH
29 BOLT

KC0014-6JS-F-RP

Figure 14 — Oil Supply and Return Line Routing

20. Turbocharger (16) from mounting bracket (15).

Inspect

- All air passages for foreign material.
- Turbocharger. Refer to "Turbocharger Inspection" in this section.

Install or Connect

NOTICE: See "Notice" on page 6J-1 of this section.

1. Turbocharger (16) to the mounting bracket (15).
2. Nuts (17) holding turbocharger (16) to the mounting bracket (15).

Tighten

- Nuts (17) to 27 N·m (20 lb. ft.).

3. Mounting bracket (15) with the turbocharger (16) to the engine.
4. Bolts (18) holding mounting bracket (15) to the engine.

Tighten

- Bolts (18) to 50 N·m (37 lb. ft.).

5. Nuts (23) and studs (24) retaining the exhaust manifold (10) to the turbocharger (16).
6. Exhaust pipe (25) to the turbocharger (16).
7. Springs (22) and bolts (21) retaining the exhaust pipe (25) to the turbocharger (16), loosely.
8. Oil drain pipe (27) with gasket to the turbocharger (16).
9. Bolts (29) retaining the oil drain pipe (27) to the turbocharger (16).

Tighten

- Bolts (29) to 30 N·m (22 lb. ft.).
- Bolts (21) to 40 N·m (30 lb. ft.).
- Nuts (23) to 27 N·m (20 lb. ft.).

10. Oil feed pipe (26) to the fitting at the turbocharger (16).

Tighten

- Fitting to 10 N·m (89 lb. ft.).

11. Vacuum lines to the wastegate actuator and turbocharger outlet.
12. Turbocharger air inlet tube hose to the turbocharger (16).
- Tighten hose clamp at turbocharger air inlet.

13. Compressor outlet pipe hose (46) to the turbocharger (16).
- Tighten hose clamp (47) at turbocharger compressor outlet pipe.

14. Elbow heat shield (20) to the mounting bracket (15).

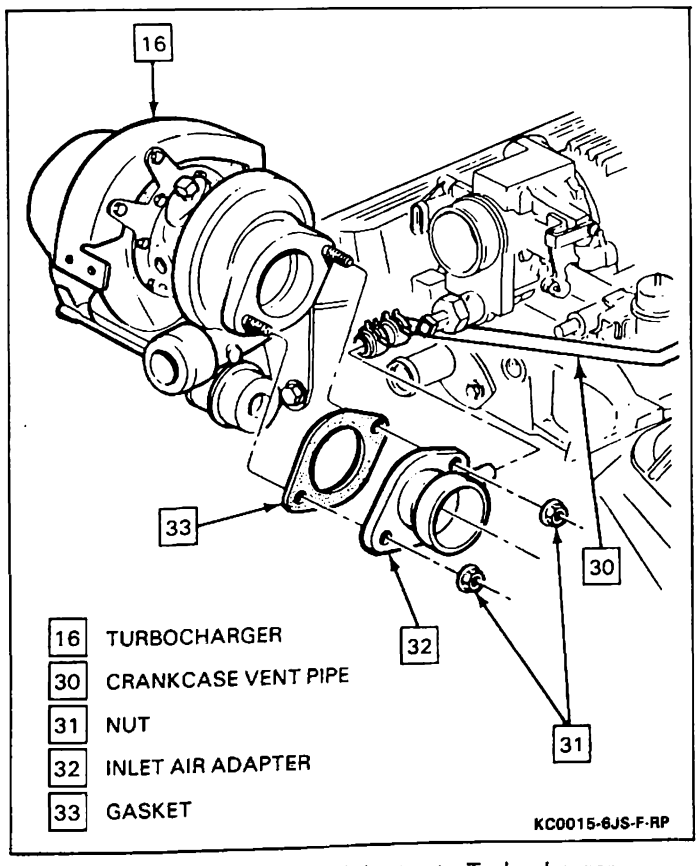

Figure 15 — Inlet Air Adapter to Turbocharger

15. Bolt (19) retaining elbow heat shield (20) to the mounting bracket (15).

Tighten

- Bolt (19) to 27 N·m (20 lb. ft.)

16. Turbocharger heat shield (13) to the mounting bracket (15).
17. Bolts (14) retaining the turbocharger heat shield (13) to the mounting bracket (15).

Tighten

- Bolts (14) to 27 N·m (20 lb. ft.).

18. Inlet air adapter (32) to the turbocharger (16).
19. Nuts (31) to inlet air adapter (32).

Tighten

- Nuts (31) to 23 N·m (17 lb. ft.)

20. Crankcase vent pipe hose to the inlet air adapter (32).
    - Relieve tension on forward hose clamp and push hose into place.

Adjust

- Boost pressure. Refer to "Wastegate/Boost Pressure Test Procedure" in this section.

WASTEGATE ACTUATOR

Figures 12 and 14

Remove or Disconnect

1. Bolts (14) from turbocharger heat shield (13).
2. Turbocharger heat shield (13).
3. Vacuum hose at actuator.
4. Clip retaining actuator rod to wastegate lever.
5. Rear bolt (29) at oil drain pipe (27).
6. Bolts attaching the mounting bracket to the compressor housing.
7. Wastegate actuator.

Install or Connect

NOTICE: See "Notice" on page 6J-1 of this section.

1. Wastegate actuator.
2. Bolts attaching the mounting bracket to the compressor housing.

Tighten

- Mounting bracket bolts to 27 N·m (20 lb. ft.).

3. Rear bolt (29) at oil drain pipe (27).

Tighten

- Bolt (29) to 30 N·m (22 lb. ft.).

4. Clip retaining actuator rod to the wastegate lever.
5. Vacuum hose at actuator.
6. Turbocharger heat shield (13).
7. Bolts (14) to turbocharger heat shield (13).

Tighten

- Bolts (14) to 27 N·m (20 lb. ft.).

Adjust

- Boost pressure. Refer to "Wastegate/Boost Pressure Test Procedure" in this section.

INTERCOOLER

Figure 16

Remove or Disconnect

1. Turbocharger air inlet tube from air cleaner and turbocharger (16).
   - Loosen clamps at both ends of air inlet tube.
   - Remove two screws securing tube to air cleaner bracket.
2. Bolts (41) retaining duct (42) to the sides and top of the intercooler (43).
- Raise and suitably support vehicle as described in the 1989 Firebird Service Manual.
3. Bolts (41) retaining duct (42) to the bottom of the intercooler (43).
4. Bolts (44) retaining the intercooler (43) to the mounting bracket (45).
5. Mounting bracket (45).
6. Bolts (40) retaining the mounting bracket (39) to the front cover.
- Lower vehicle.
7. Intercooler inlet tube from the turbocharger (16).
   - Loosen forward hose clamp (47).
   - Pull tube from hose (46).
8. Intermediate pipe (36) from the throttle body and the intercooler (43).
   - Loosen rear hose clamp (35) and lower hose clamp (38).
   - Pull intermediate pipe (36) with assembled hoses (34 and 37) and clamps (35 and 38) from throttle body and intercooler (43).
9. Bolts (40) retaining the mounting bracket (39) to the intercooler (43) and generator mounting bracket.
10. Intercooler (43).

Install or Connect

NOTICE: See "Notice" on page 6J-1 of this section.

1. Intercooler (43).
2. Bolts (40) retaining the mounting bracket (39) to the intercooler (43) and generator mounting bracket.

Tighten

- Bolts (40) to 20 N·m (15 lb. ft.).

3. Intermediate pipe (36) to the throttle body and the intercooler (43).
   - Position intermediate pipe (36) with assembled hoses (34 and 37) and clamps (35 and 38) to throttle body and intercooler (43).
   - Tighten rear hose clamp (35) and lower hose clamp (38).
4. Intercooler inlet tube to the turbocharger (16).
   - Push tube into hose (46).
   - Tighten forward hose clamp (47).
5. Bolts (41) retaining duct (42) to the sides and top of the intercooler (43).

Tighten

- Bolts (41) to 1.9 N·m (17 lb. in.).

- Raise and suitably support vehicle as described in the 1989 Firebird Service Manual.
6. Bolt (40) retaining mounting bracket (39) to front cover.
7. Mounting bracket (45).
8. Bolts (44) retaining the intercooler to mounting bracket (45).

Tighten

- Bolts (40 and 44) to 20 N·m (15 lb. ft.).

9. Bolts (41) retaining duct (42) to the bottom of the intercooler (43).

Tighten

- Bolts (41) to 1.9 N·m (17 lb. in.).

- Lower vehicle.
10. Turbocharger air inlet tube to air cleaner and turbocharger (16).
    - Install two screws securing tube to air cleaner bracket.
    - Tighten clamps at both ends of air inlet tube.

INTERCOOLER DUCT

Figure 16

Remove or Disconnect

1. Bolts (41) from sides and top duct.
- Raise and suitably support vehicle as described in the 1989 Firebird Service Manual.
2. Bolts (41) from bottom of duct.
3. Duct (42).

Install or Connect

NOTICE: See "Notice" on page 6J-1 of this section.

- Raise and suitably support vehicle as described in the 1989 Firebird Service Manual.
1. Duct (42).
2. Bolts (41) to bottom of duct.

Tighten

- Bolts (41) to 1.9 N·m (17 lb. in.).

- Lower vehicle.
3. Bolts (41) to the sides and top of the duct (42).

Tighten

- Bolts (41) to 1.9 N·m (17 lb. in.).

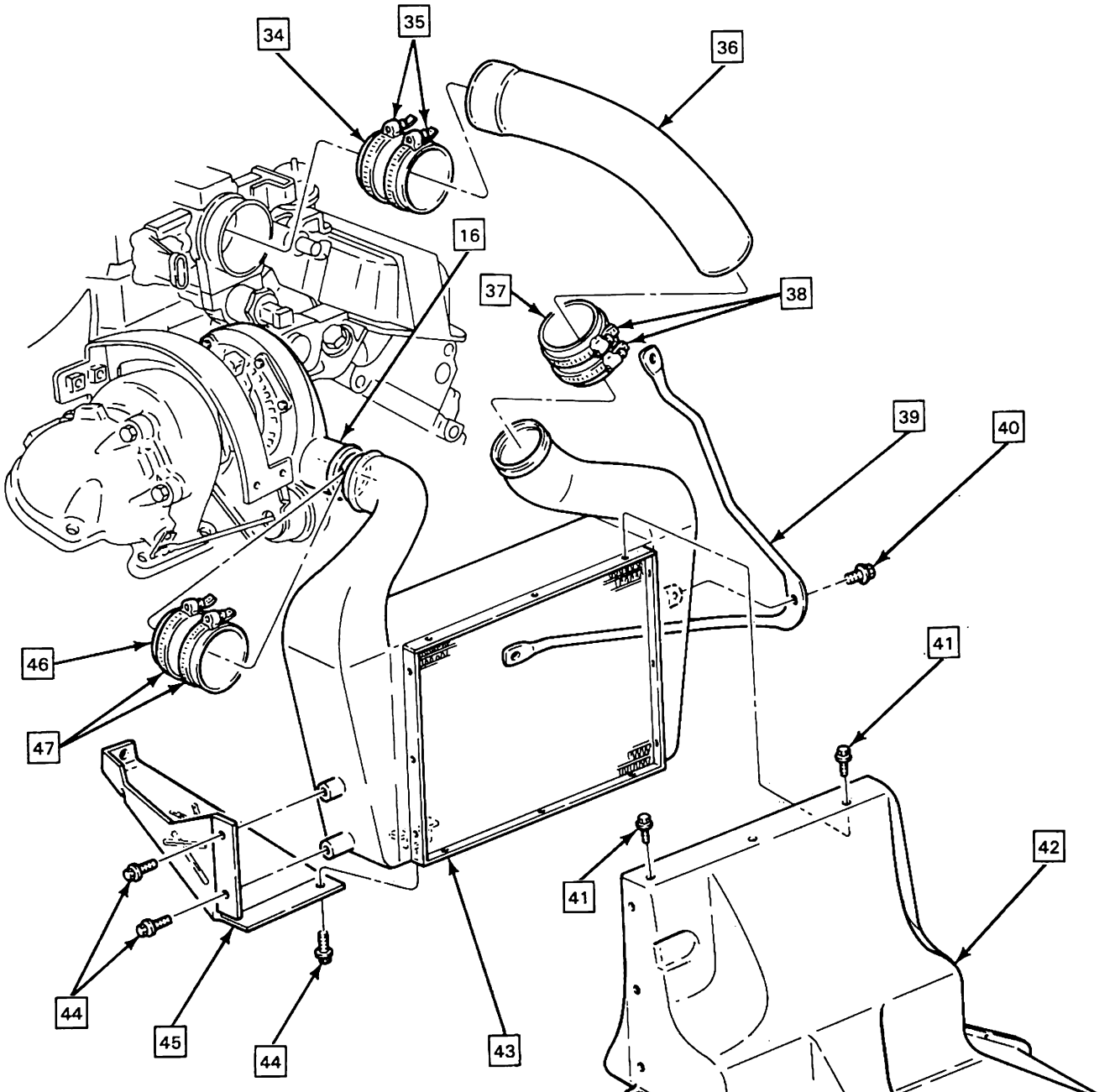

16	TURBOCHARGER	41	BOLT
34	HOSE	42	DUCT
35	CLAMP	43	INTERCOOLER
36	INTERMEDIATE PIPE	44	BOLT
37	HOSE	45	BRACKET
38	CLAMP	46	HOSE
39	BRACKET	47	CLAMP
40	BOLT		

KC0016-6JS-F-RP

Figure 16 — Intercooler

WASTEGATE/BOOST PRESSURE TEST PROCEDURE

Inspect

Tools Required:
J 23738-A Hand Vacuum Pump
J 28474 Turbo Compound Gage

1. Wastegate-actuator mechanical linkage for damage.
2. Hoses to actuator assembly.
3. Boost pressure.
   - Attach J 23738-A in series with J 28474 to actuator assembly.
   - Apply pressure to actuator assembly.
     - At approximately 93 kPa (13.5 psi) the actuator rod end should move 0.38 mm (0.015 inch) actuating the wastegate linkage.
     - If this does not occur, replace the actuator assembly and test for proper calibration.
     - Crimp the threads on actuator rod to maintain correct calibration.
   - Remove test equipment and reconnect hoses.
     - An alternative method of checking wastegate operation is to perform a road test which measures boost pressure.

Road Test

Tool Required:
J 28474 Turbo Compound Gage

1. Tee J 28474 into tubing between compressor housing and boost gage or MAP sensor switch with sufficient length of hose to place gage in passenger compartment.

CAUTION: Determine that hose and compound gage are in proper operating condition to avoid possible leakage of air-fuel mixture into passenger compartment during road test, which could cause bodily harm.

2. Disconnect hose at wastegate solenoid and plug.
3. Conditions and speed limits permitting, perform a zero to 64 to 80 km/h (40 to 50 mph) wide open throttle acceleration.
   - If boost pressure as measured by the compound gage during road testing does not reach 89.6 to 96.5 kPa (13 to 14 psi), replace the actuator assembly and test for proper calibration.

TURBOCHARGER INTERNAL INSPECTION PROCEDURE

Figures 17 and 18

Inspect

Tool Required:
J 8001 Dial Indicator Set

1. Bolts from backplate to center housing rotating assembly for looseness.
2. For missing gasket or O-ring.

NOTICE: Continued operation of a turbocharger with improper thrust bearing axial clearance will result in severe damage to the compressor wheel and housing or to the turbine wheel and housing.

3. Journal bearings for radial clearance.
   - Attach J 8001 with a 2-inch long, 3/4 to 1-inch offset extension rod to the center housing so that the indicator plunger extends through the oil outlet port and contacts the shaft of the rotating assembly. If required, a dial indicator mounting adapter can be used.
   - Manually apply pressure, equally and at the same time, to both the compressor and turbine wheels, as required, to move the shaft away from the dial indicator plunger as far as it will go.
   - Set the dial indicator to zero.
   - Manually apply pressure, equally and at the same time, to both the compressor and turbine wheels to move the shaft toward the dial indicator plunger as far as it will go. Note the maximum value on the indicator dial.
     - Make sure that the dial indicator reading noted is the maximum reading obtainable, which can be verified by rolling the wheels slightly in both directions while applying pressure.
   - Manually apply pressure, equally and at the same time to the compressor and turbine wheels, as required, to move the shaft away from the dial indicator plunger as far as it will go. Note that the indicator pointer returns exactly to zero.
   - Repeat procedure, as required, to make sure that the maximum clearance between the center housing bores and the shaft bearing diameters, as indicated by the maximum shaft travel, has been obtained.
   - If the maximum bearing radial clearance is less than 0.08 mm (0.003 inch) or greater than 0.15 mm (0.006 inch), replace center housing rotating assembly and inspect housings.
4. Thrust bearing axial clearance.
   - Mount J 8001 at the turbine end of the turbocharger so that the tip rests on the end of the turbine wheel.
   - Manually move the compressor wheel and turbine wheel assembly alternately toward and away from the dial indicator plunger. Note the travel of the shaft in each direction, as shown on J 8001.
     - Repeat as required to make sure that the maximum clearance between the thrust bearing components has been obtained.
   - If the maximum thrust bearing axial clearance is less than 0.03 mm (0.001 inch) or greater than 0.08 mm (0.003 inch), replace center housing rotating assembly and inspect housings.

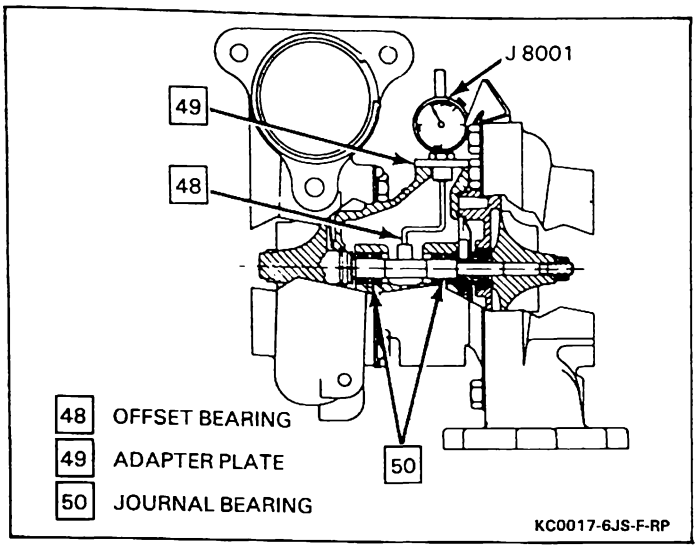

Figure 17 — Journal Bearing Clearance Check

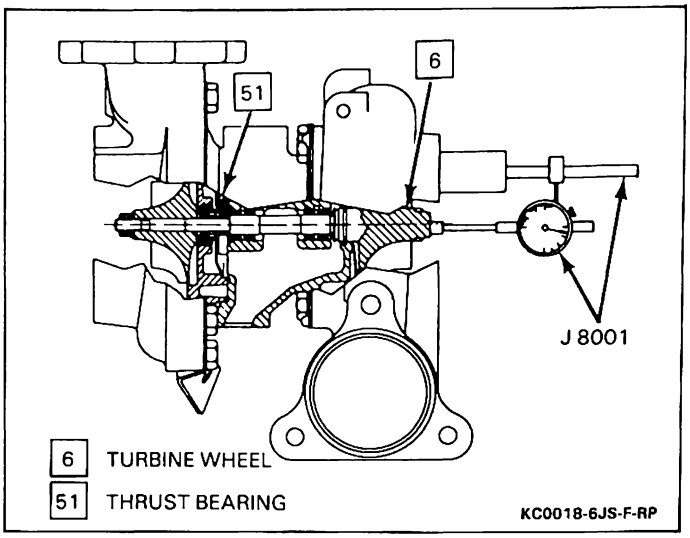

Figure 18 — Thrust Bearing Clearance Check

SPECIFICATIONS

FASTENER TORQUE SPECIFICATIONS

Exhaust Manifold-to-Turbine Housing Nut	27 N·m (20 lb. ft.)
Oil Feed Pipe to Fitting at Turbocharger	10 N·m (89 lb. in.)
Oil Drain-to-Center Housing Rotating Assembly Bolt	30 N·m (22 lb. ft.)
Mounting Bracket-to-Cylinder Head Bolt	50 N·m (37 lb. ft.)
Turbocharger-to-Bracket Nut	27 N·m (20 lb. ft.)
Turbocharger Heat Shield-to-Bracket Bolt	27 N·m (20 lb. ft.)
Elbow Heat Shield-to-Bracket Bolt	27 N·m (20 lb. ft.)
Exhaust Pipe-to-Turbocharger Bolt	40 N·m (30 lb. ft.)
Intercooler-to-Mounting Bracket Bolt	20 N·m (15 lb. ft.)
Duct-to-Intercooler Bolt	1.9 N·m (17 lb. in.)
Wastegate Actuator Bracket-to-Turbocharger Bolt	27 N·m (20 lb. ft.)
Inlet Air Adapter-to-Turbocharger Nuts	23 N·m (17 lb. ft.)

SPECIAL TOOLS

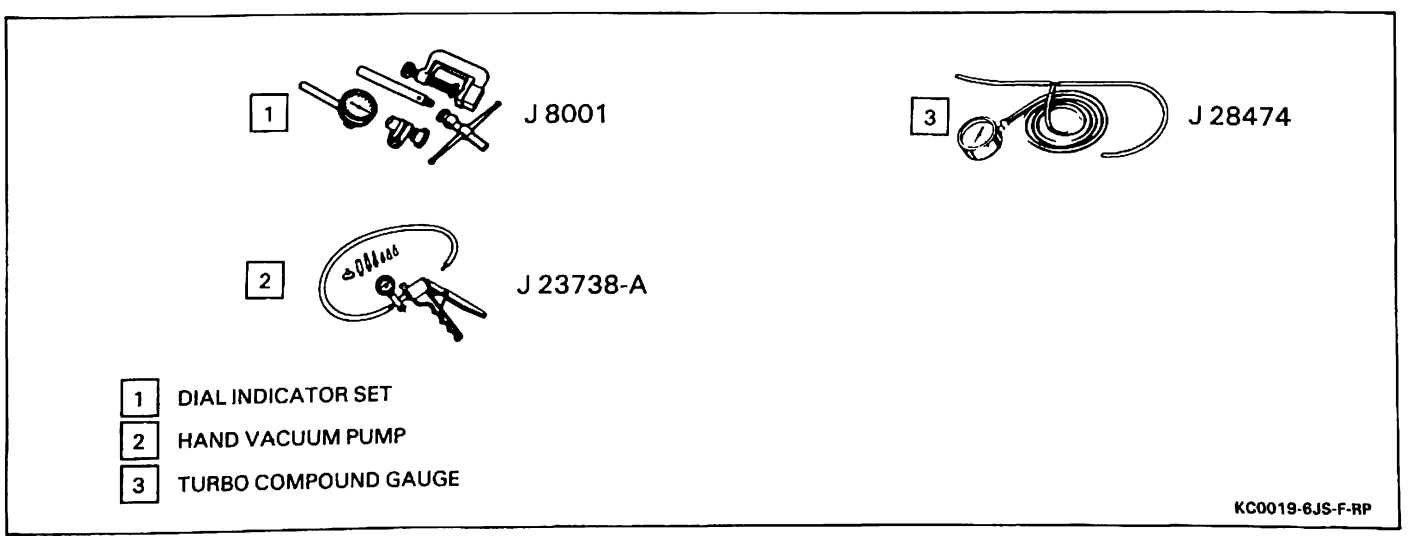

SECTION 7A

TRANSMISSION GENERAL INFORMATION AND ON-VEHICLE SERVICE

The following "Notice" applies to one or more steps in the assembly procedure of components in this portion of the manual as indicated at appropriate locations by the terminology "NOTICE: See "Notice" on page 7A-1 of this section."

NOTICE: When fasteners are removed, always reinstall them at the same location from which they were removed. If a fastener needs to be replaced, use the correct part number fastener for that application. If the correct part number fastener is not available, a fastener of equal size and strength (or stronger) may be used. Fasteners that are not reused, and those requiring thread locking compound will be called out. The correct torque value must be used when installing fasteners that require it. If the above conditions are not followed, parts or system damage could result.

CONTENTS

General Description 7A-1
Transmission Identification 7A-1
Preliminary Checking Procedure 7A-1
General Service Procedures 7A-1
Flywheel/Torque Converter Vibration Test Procedure 7A-1
Fluid Leak Diagnosis 7A-2
Torque Converter Clutch Electrical Controls 7A-2
Torque Converter Clutch Diagnosis 7A-4
On-Vehicle Service 7A-4
TV Cable 7A-4
Changing Fluid and Filter 7A-4
Oil Cooler Flushing Procedure 7A-4
Serviceable Components 7A-6
Servo Assembly 7A-6
Speedometer Driven Gear 7A-7
Governor 7A-7
Filler Tube 7A-8
Accumulator Assembly 7A-8
Control Valve Assembly 7A-9
Rear Oil Seal 7A-10
Transmission Assembly Removal and Installation 7A-11
Crossmember 7A-13
Specifications 7A-13
Special Tools 7A-14

GENERAL DESCRIPTION

TRANSMISSION IDENTIFICATION

Figures 1 and 2

The transmission has a metal identification tag attached to the case exterior or an identification number stamped on the pan rail (Figure 1). The service parts identification label provides additional transmission identification (Figure 2). More information on transmission identification and the service parts identification label is given in the 1989 Firebird Service Manual.

PRELIMINARY CHECKING PROCEDURE

Transmission performance may be influenced by one or more of the following items. These items should be checked and corrected if necessary, before attempting transmission diagnosis.

- High or low fluid level.
- Engine performance. Refer to the 1989 Firebird Service Manual and DRIVEABILITY AND EMISSIONS — GENERAL INFORMATION (SEC. 6E) of this supplement.
- TV cable adjustment.
- Manual linkage adjustment.
- Internal fluid leaks. Refer to AUTOMATIC TRANSMISSION DIAGNOSIS (SEC. 200-4R) of this supplement.
- Electrical system. Refer to the 1989 Firebird Service Manual and ELECTRICAL DIAGNOSIS (SEC. 8A) of this supplement.
- Transmission or other mechanical component. Refer to AUTOMATIC TRANSMISSION DIAGNOSIS (SEC. 200-4R) of this supplement.

GENERAL SERVICE PROCEDURES

FLYWHEEL/TORQUE CONVERTER VIBRATION TEST PROCEDURE

NOTICE: Some engine/transmission combinations cannot be balanced in this manner due to limited clearances between the torque converter bolts and the engine. Be sure bolts do not bottom out in lug nuts or the torque converter cover could be dented and cause internal damage.

Remove or Disconnect

- Start engine.
- With engine at idle speed and the transmission in "PARK" or "NEUTRAL," observe vibration.
- Shut off engine.

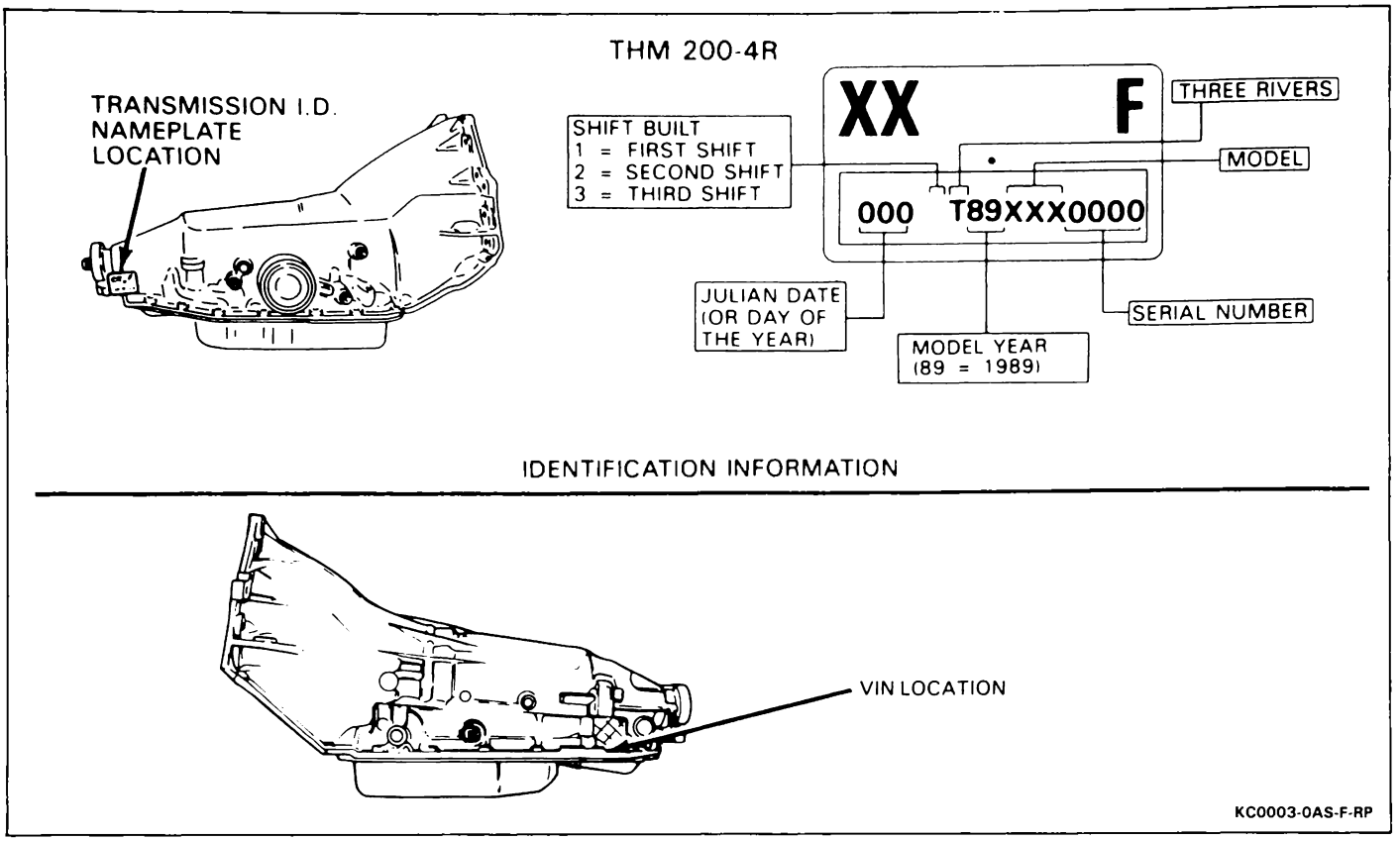

Figure 1 — Transmission Identification

1. Converter cover bolts and cover.
2. Flywheel to torque converter bolts.

- Rotate torque converter 120 degrees (1/3 turn).

Install or Connect

NOTICE: See "Notice" on page 7A-1 of this section for steps 1 and 2.

1. Flywheel to torque converter bolts.

Tighten

- Bolts to 63 N·m (46 lb. ft.).

2. Converter cover and bolts.

Tighten

- Bolts to 5.8 N·m (51 lb. in.).

- Start engine and check for vibration.
  - If vibration still exists repeat this procedure until the best possible balance is obtained.

FLUID LEAK DIAGNOSIS

Figure 3

Refer to Figure 3 and perform the fluid leak diagnosis as described in the 1989 Firebird Service Manual.

TORQUE CONVERTER CLUTCH ELECTRICAL CONTROLS

The torque converter clutch (TCC) system uses controls that are internal as well as external to the transmission. For internal control components of the TCC system, wiring diagrams and switch locations, refer to AUTOMATIC TRANSMISSION DIAGNOSIS (SEC. 200-4R) of this supplement.

The external control components of the TCC system include:

Brake Release Switch — To avoid stalling the engine when braking, the converter clutch is released any time the brakes are applied.

Electronic Control Module — Receives input signals and ground TCC solenoid to apply clutch when proper operating conditions are met.

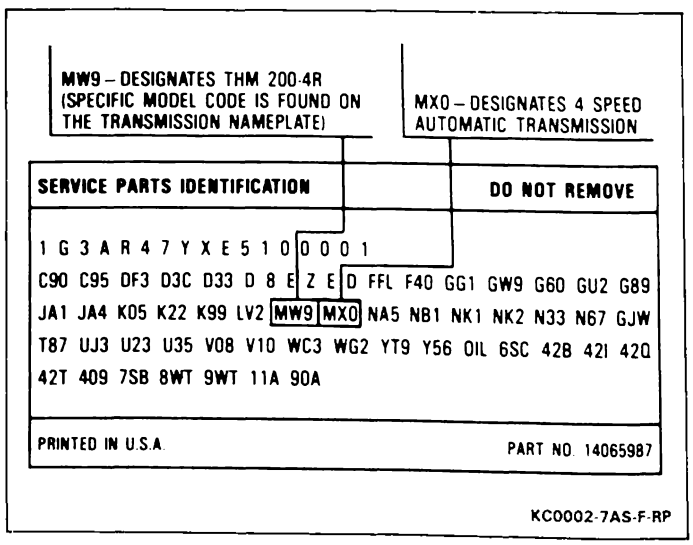

Figure 2 — Service Parts Identification Label

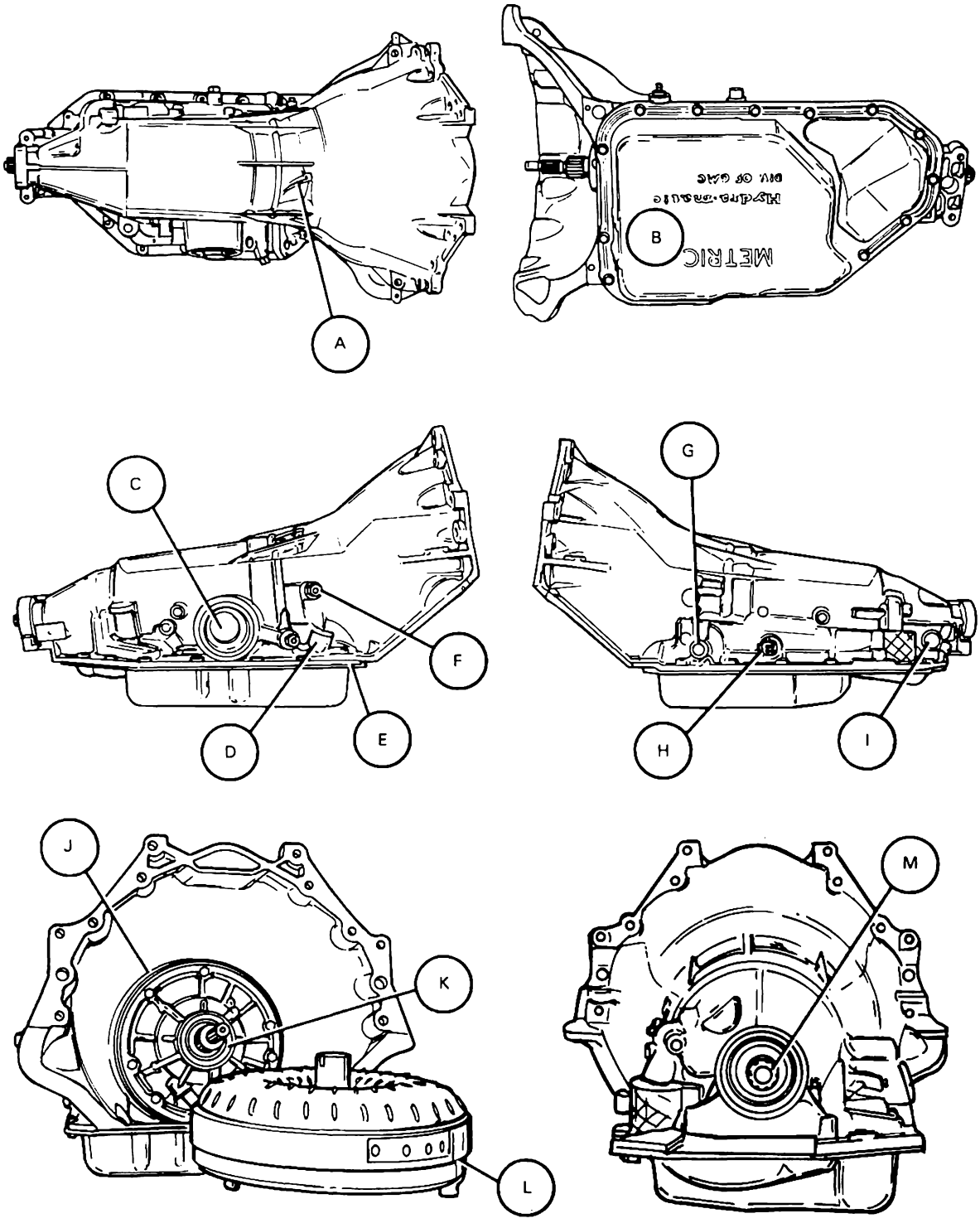

A VENT
B PAN
C SERVO COVER
D FILL TUBE SEAL
E PAN TO CASE GASKET
F COOLER CONNECTORS
G MANUAL SHAFT SEAL
H ELECTRICAL CONNECTOR SEAL
I SPEEDO SEAL
J PUMP TO CASE SEAL
K PUMP SEAL ASSEMBLY
L CONVERTER
M REAR CASE SEAL

KH0193-2004R

Figure 3 — Fluid Leak Diagnosis

Throttle Position Sensor — Sends throttle position information to electronic control module (ECM).

Vacuum Sensor — Sends engine vacuum (load) information to electronic control module (ECM).

Vehicle Speed Sensor — Sends vehicle speed information to electronic control module (ECM).

Coolant Temperature Sensor — Sends engine coolant temperature information to electronic control module (ECM).

TORQUE CONVERTER CLUTCH DIAGNOSIS

To properly diagnose the torque converter clutch (TCC) system, perform all electrical tests first and then the hydraulic tests. Refer to DRIVEABILITY AND EMISSIONS — FUEL INJECTION (PORT)(SEC. 6E3) of this supplement for additional torque converter clutch information.

ON-VEHICLE SERVICE

TV CABLE

Figure 4

Refer to Figure 4 and perform any necessary service procedures as described in the 1989 Firebird Service Manual.

CHANGING FLUID AND FILTER

Figure 5

Refer to Figure 5 and perform the procedure as described in the 1989 Firebird Service Manual.

OIL COOLER FLUSHING PROCEDURE

Figure 6

Tools Required:
- J 35944 Oil Cooler Flushing Tool
- J 35944-20 Oil Cooler Flushing Solution

NOTICE: The oil cooler flushing procedure must be performed whenever a transmission is removed for service to remove existing oil, which may be contaminated, and to prevent contamination of new oil. The flushing procedure must be performed after installation of the overhauled or replacement assembly.

NOTICE: Flushing tool is designed for use with only J 35944-20 flushing solution. Use of any other solution can result in damage to the tool and cooler components or improper flushing of the cooler.

1. Remove fill cap on J 35944 and fill with 0.6 liters (20-21 ounces) of J 35944-20 flushing solution.
   - Do not overfill tool.
   - Follow manufacturer's suggested procedures for handling the solution.
2. Replace cap on J 35944 and pressurize to 550-700 kPa (80-100 psi).

NOTICE: Compressed air supply must be equipped with a water/oil filter and pressure should not exceed 825 kPa (120 psi). Failure to use a water/oil filter can allow residual moisture to cause

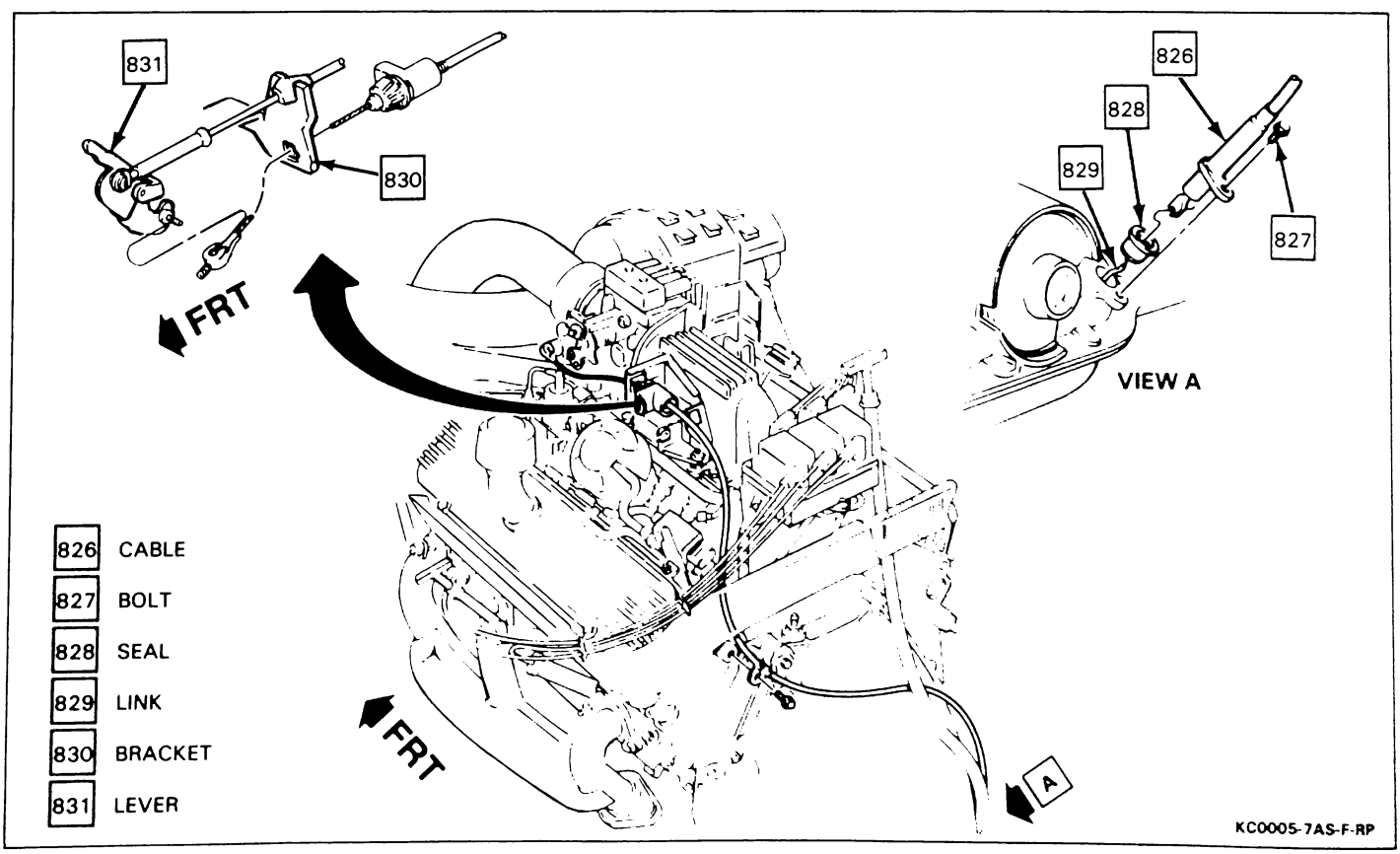

Figure 4 — TV Cable

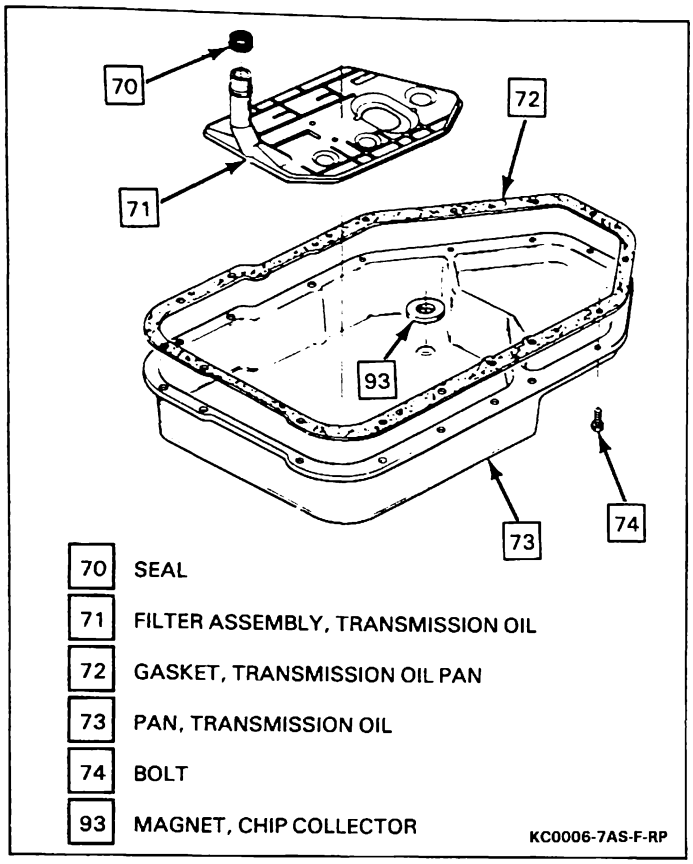

Figure 5 — Oil Pan and Filter

corrosion of components. Excessive air pressure can cause damage to components.

3. Install J 35944 to the undercarriage of the vehicle with the hook provided and attach the hose from the flushing tool to the oil cooler pipe that attaches to the top fitting at the transmission end of the oil cooler pipe.
4. Install discharge hose to the oil cooler pipe that attaches to the bottom fitting at the transmission end of the oil cooler pipe. Clip opposite end of discharge hose to the oil drain container.
5. With the water valve on the tool in the "OFF" position, attach the water supply to J 35944.
6. Turn water supply on at faucet.
7. Flush the transmission fluid by opening the water valve on the tool to the "ON" position for about 10 seconds.
   - If water does not flow through the cooler (the system is completely plugged), do not complete the flushing procedure. Turn water off immediately and inspect the oil cooler and pipes for restriction. Replace cooler and pipes as required.
8. Turn water valve on tool to the "OFF" position and clip the discharge hose to a 5 gallon pail. Cover the pail with a shop cloth to prevent splash.
9. Turn the water valve on the tool to the "ON" position and depress the trigger to mix flushing solution into the water flow.
   - Use a bale clip to hold the trigger down.

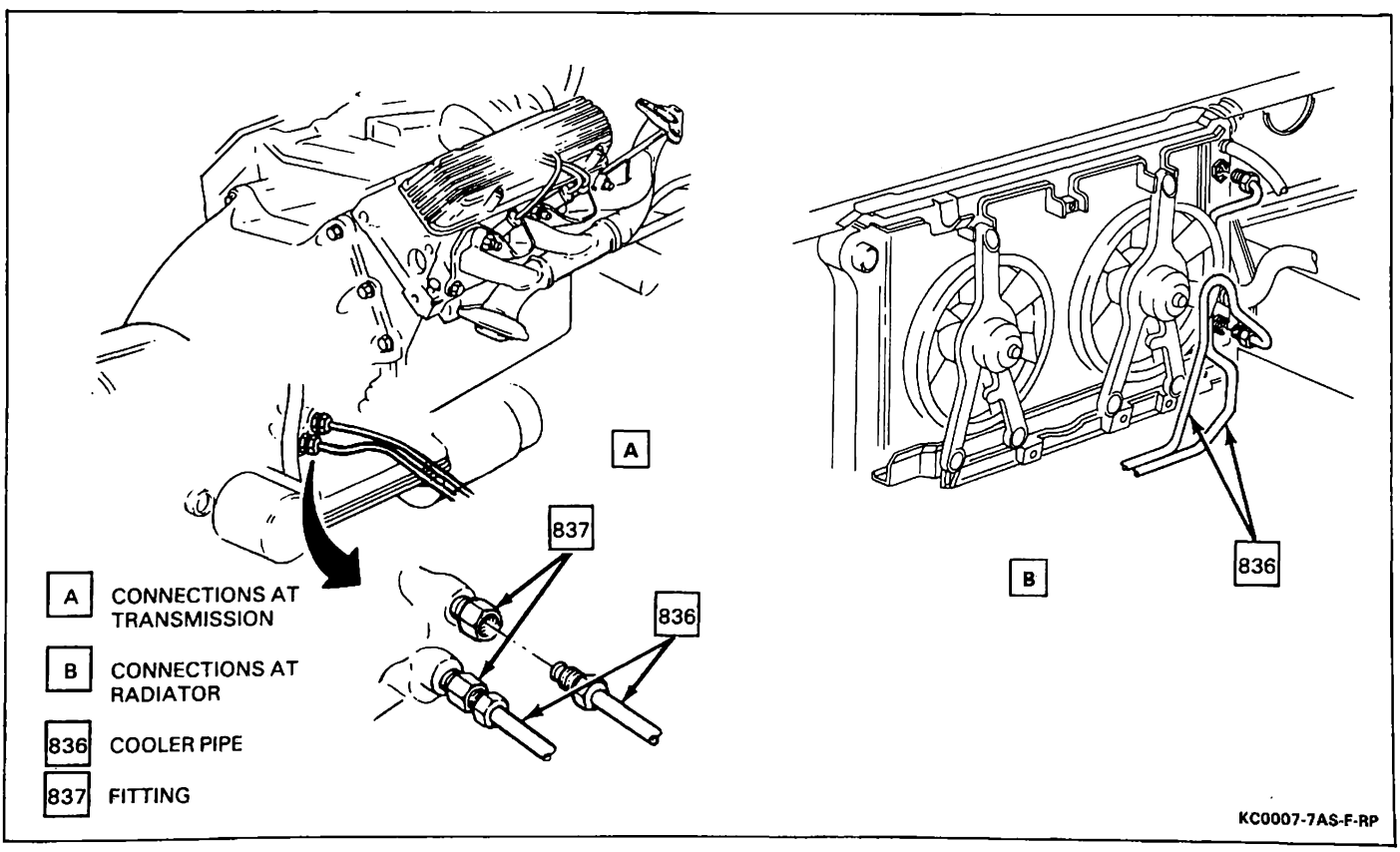

Figure 6 — Transmission Oil Cooler Pipes

10. Flush oil cooler with water and solution for two minutes.
    - Every 15-20 seconds during this flushing procedure attach air supply to the air valve on J 35944 and leave in place for 3-5 seconds to create a surging action for complete cleaning.
11. Release the trigger and turn the water valve on the tool to the "OFF" position.
12. Disconnect both hoses from the oil cooler pipes.
13. Install J 35944 to the oil cooler pipe that attaches to the **bottom** fitting of the oil cooler.
14. Connect the discharge hose to the oil cooler pipe that attaches to the **top** fitting of the oil cooler.
    - Reversing hoses will create a backflush.
15. Repeat steps 9 and 10.
16. Release the trigger and allow water only to rinse the oil cooler for one minute.
17. Turn the water valve on the tool to the "OFF" position and turn water supply off at the faucet.
18. Attach air supply to the air valve on J 35944 and dry the system out with dry compressed air for at least two minutes. Be sure that no moisture can be seen leaving the hose.
    - Use an air chuck clip, if available, to secure air chuck onto the air valve for ease of operation.
19. Remove J 35944 and discharge hose from oil cooler and pipes.
20. Connect the oil cooler feed pipe to the transmission. The feed pipe is the pipe attached to the **top** connection at the transmission end of the system.
21. Attach discharge hose to the oil cooler return pipe. The return pipe is the pipe attached to the **bottom** connection at the transmission end of the system.
22. Attach opposite end of discharge hose to the oil drain container.
23. Fill transmission with fluid.
24. Start engine and run for 30 seconds to remove any residual moisture from the cooler.

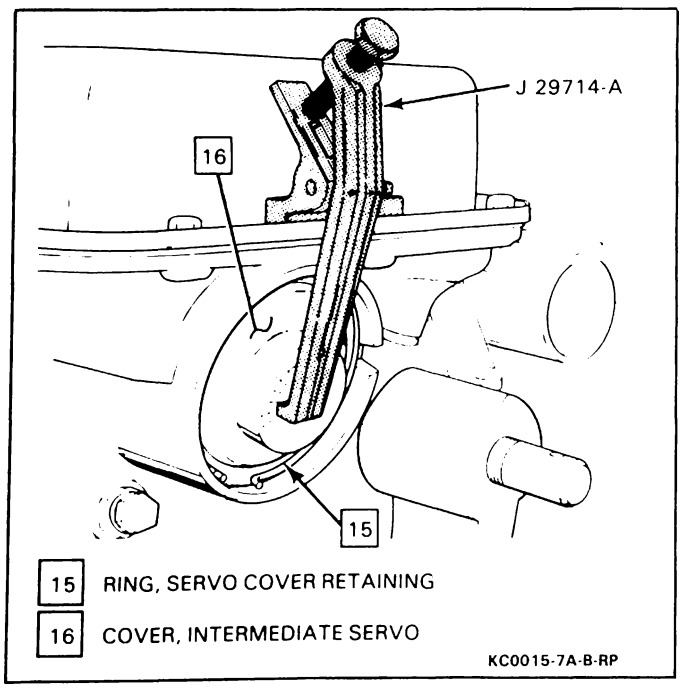

Figure 7 — Removing Servo Cover

Inspect

- Fluid flow during the 30 second running period. A minimum of 1.8 liters (2 quarts) of fluid should flow during this time.
- If fluid flow is insufficient, check the flow by disconnecting the feed line at the cooler and observe the flow with the engine running.
  - If fluid flow is insufficient, inspect the transmission for possible fluid leak.
  - If fluid flow is sufficient, inspect the oil cooler pipes and fittings for restriction and repeat cooler flushing procedure. Replace feed line and repeat inspection procedure. If fluid flow is still insufficient, replace the cooler.

25. Disconnect discharge hose.
26. Connect oil cooler return pipe to fitting.

Adjust

- Transmission fluid level.

SERVICEABLE COMPONENTS

SERVO ASSEMBLY

Figures 7 and 8

Remove or Disconnect

Tool Required:
J 29714-A Servo Cover Depressor

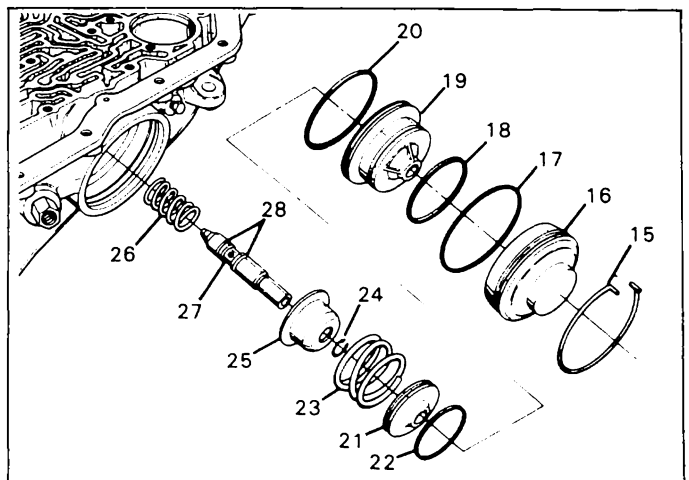

15 RING, SERVO COVER RETAINING
16 COVER, INTERMEDIATE SERVO
17 SEAL, "O" RING (INTERMEDIATE SERVO COVER)
18 RING, OIL SEAL (INNER)
19 PISTON, INTERMEDIATE SERVO (OUTER)
20 RING, OIL SEAL (OUTER)
21 PISTON, INTERMEDIATE SERVO (INNER)
22 RING, OIL SEAL PISTON (INNER)
23 SPRING, INTERMEDIATE SERVO CUSHION
24 RING, SNAP (APPLY PIN/RETAINER)
25 RETAINER, SERVO SPRING
26 SPRING, INTERMEDIATE SERVO (INNER)
27 PIN, INTERMEDIATE BAND APPLY (SELECTIVE)
28 RING, OIL SEAL (INTERMEDIATE BAND APPLY PIN)

HH0032200-4R

Figure 8 — Intermediate Servo Assembly

1. Catalytic converter heat shield screws.
- Slide heat shield outboard.
- Install J 29714-A using two oil pan bolts.
- Depress servo cover (16) using J 29714-A.
2. Retaining ring (15) using a suitable tool.
3. Servo cover (16) and O-ring seal (17).
   - Seal (17) may be located in the case.
4. J 29714-A.
5. Servo assembly (18 through 28).

Inspect

- Servo assembly (18 through 28). Refer to AUTOMATIC TRANSMISSION UNIT REPAIR (SEC. 200-4R) of this supplement for inspection and disassembly procedures.

Install or Connect

1. Servo assembly (18 through 28).
2. New O-ring seal (17) and servo cover (16).
3. J 29714-A.
4. Retaining ring (15).
- Remove J 29714-A.
- Replace heat shield.
5. Catalytic converter heat shield screws.

SPEEDOMETER DRIVEN GEAR

Figure 9

Remove or Disconnect

1. Speedometer electrical connector (838).
2. Retainer bolt (841).
3. Retainer (840).
4. Speedometer driven gear (839) and O-ring seal.

Install or Connect

1. Speedometer driven gear (839) with a new O-ring seal.
2. Retainer (840).

NOTICE: See "Notice" on page 7A-1 of this section.

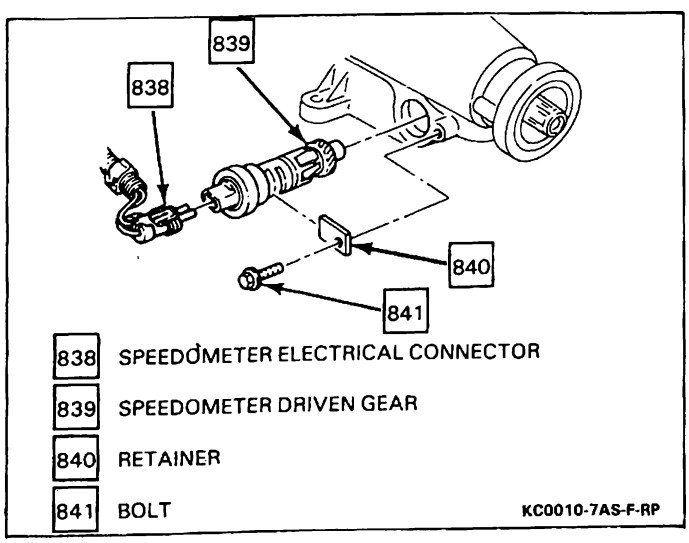

Figure 9 — Speedometer Driven Gear

3. Bolt (841).

Tighten

- Bolt 4.5 N·m (40 lb. in.).
4. Speedometer electrical connector (838).

GOVERNOR

Figure 10

Remove or Disconnect

- Raise and suitably support the vehicle as described in the 1989 Firebird Service Manual.
- Drain transmission oil pan.
1. Oil pan, bolts, oil pan filter and pan gasket.
2. Governor cover screws (44), cover (43) and gasket (42).
3. Governor (41).
   - It may be necessary to rotate the output shaft counterclockwise while removing the governor (41). Do not use pliers to remove governor (41).

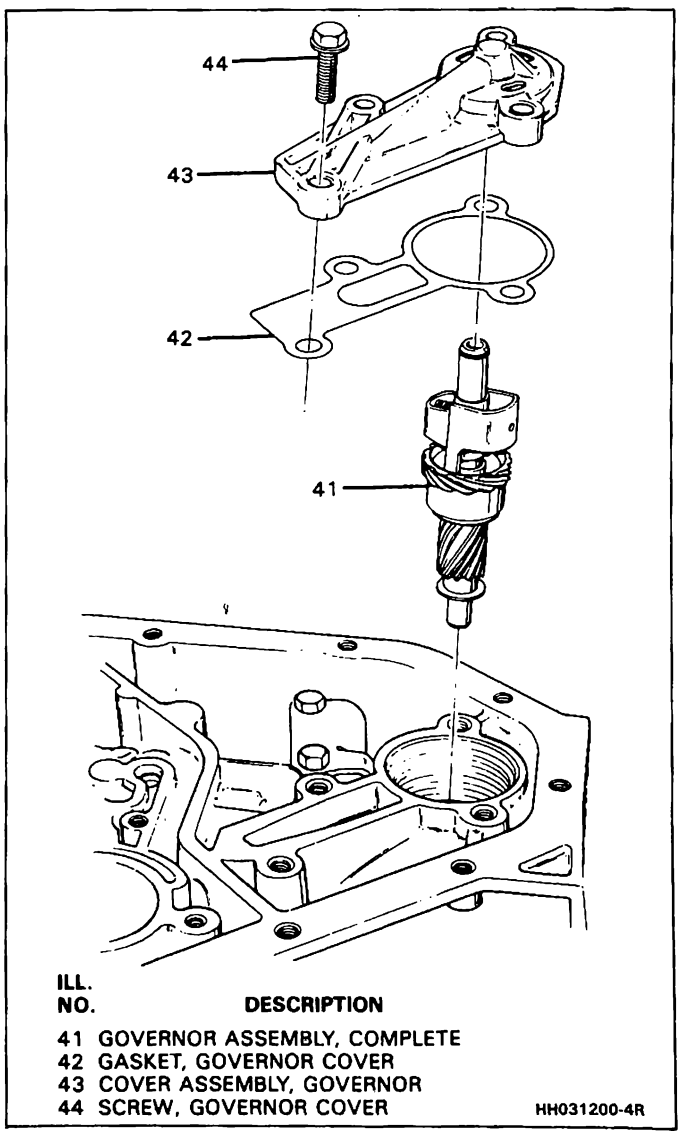

Figure 10 — Removing Governor

Install or Connect

1. Governor (41).
2. Cover (43), new gasket (42) and screws (44).
3. Oil pan, filter, new gasket, and bolts.

Tighten

- Bolts to 20 N·m (15 lb. ft.).

Adjust

- Transmission fluid level.

FILLER TUBE

Figure 11

Remove or Disconnect

1. Fluid level indicator (843).
- Raise and suitably support vehicle as described in the 1989 Firebird Service Manual.
2. Bolt (845) retaining filler tube to transmission (842).
- Loosen filler tube (844) from transmission (842).
- Lower vehicle.
3. Filler tube (844) from the vehicle by pulling out from the top.

Install or Connect

1. Filler tube (844) through the top of the vehicle.
- Raise and suitably support vehicle as described in the 1989 Firebird Service Manual.

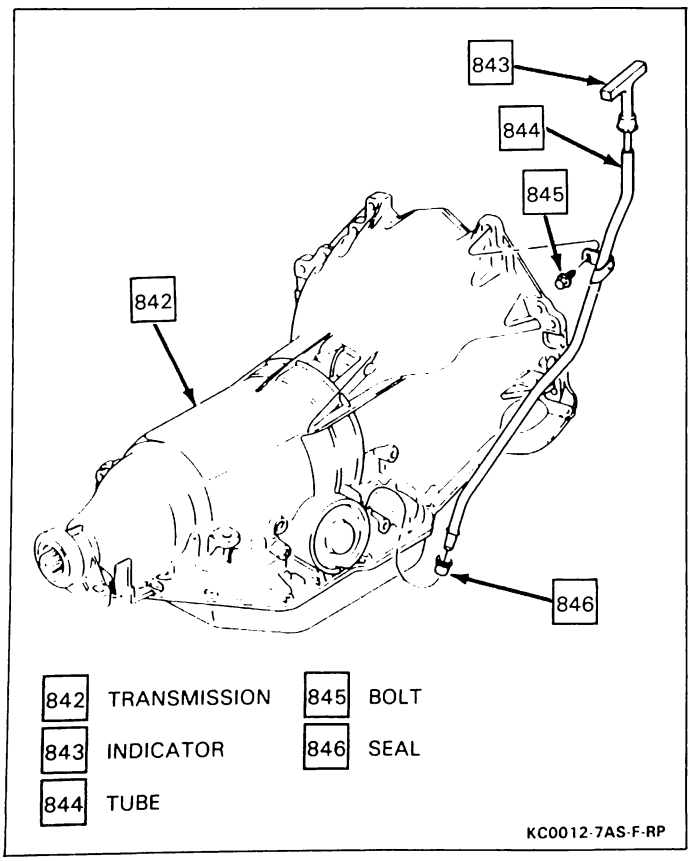

Figure 11 – Filler Tube

2. Filler tube seal (846) into the transmission case hole.
3. Filler tube (844) to transmission (842).

NOTICE: See "Notice" on page 7A-1 of this section.

4. Filler tube bolt (845) to transmission (842).

Tighten

- Bolt (845) to 47 N·m (35 lb. ft.).
- Lower vehicle.
5. Fluid level indicator (843).

ACCUMULATOR ASSEMBLY

Figure 12

Remove or Disconnect

- Raise and suitably support vehicle as described in the 1989 Firebird Service Manual.
- Drain transmission oil pan.
1. Oil pan bolts, oil pan, filter and pan gasket.
2. Bolts (63 and 88) attaching housing to valve body.
3. Housing and pin assembly (62), spring (59), plate (57) and gasket (58).
4. The 1-2 accumulator piston (61) and oil seal ring (60) from housing (62).
   - Apply low air pressure 21 kPa (3 psi) to orifice in housing.
5. Accumulator oil seal ring (60) from the 1-2 accumulator piston (61).
6. Spacer plate (56) and gaskets (86 and 87).
7. The 3-4 accumulator piston (49) and oil seal ring (50), spring (51) and pin (76).
8. Oil seal ring (50) from piston (49).

Inspect

- Accumulator assembly. Refer to AUTOMATIC TRANSMISSION UNIT REPAIR (SEC. 200-4R) of this supplement.

Install or Connect

1. Oil seal ring (50) to 3-4 accumulator piston (49).
2. The 3-4 accumulator piston (49) and oil seal ring (50), spring (51) and pin (76).
3. Spacer plate (56) and gaskets (86 and 87).
4. Oil seal ring (60) to 1-2 accumulator piston (61).
5. Plate (57) and gasket (58).
6. Spring (59).
7. The 1-2 accumulator piston (61) and oil seal ring (60) to the housing and pin assembly (62).
8. Bolts (63 and 88) attaching housing to valve body.
9. Oil pan, filter, gasket and bolts.

Tighten

- Bolts to 20 N·m (15 lb. ft.).
- Lower vehicle.

Adjust

- Transmission fluid level.

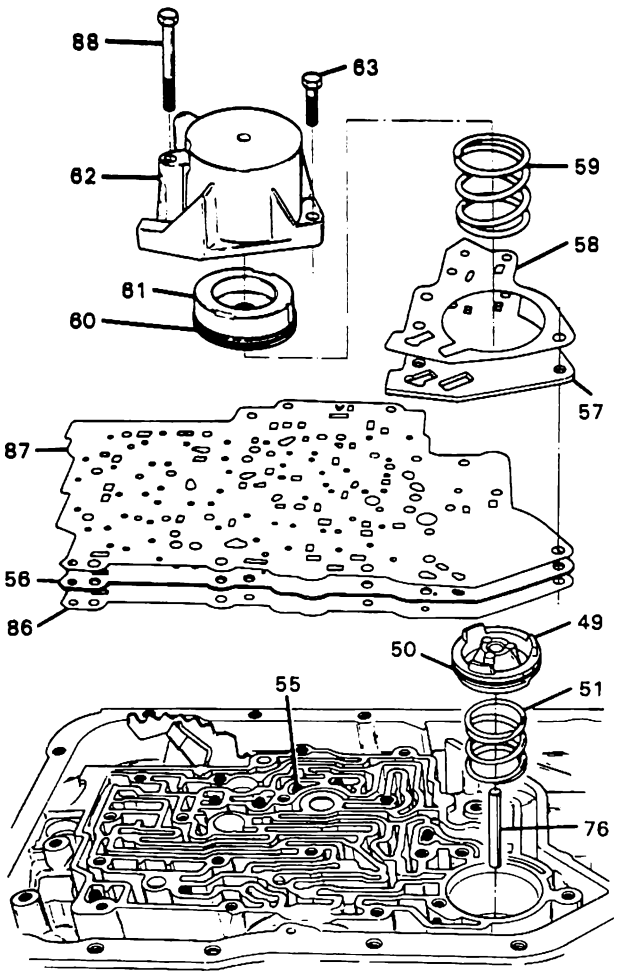

ILL. NO.	DESCRIPTION
49	PISTON, 3-4 ACCUMULATOR
50	RING, OIL SEAL (3-4 ACCUMULATOR PISTON)
51	SPRING, 3-4 ACCUMULATOR
55	BALL, .25 DIAMETER
56	PLATE, VALVE BODY SPACER
57	PLATE, ACCUMULATOR
58	GASKET, ACCUMULATOR HSG. TO ACCUM. PLATE
59	SPRING, 1-2 ACCUMULATOR PISTON
60	RING, OIL SEAL (1-2 ACCUMULATOR PISTON)
61	PISTON, 1-2 ACCUMULATOR
62	HOUSING & PIN ASSEMBLY, 1-2 ACCUMULATOR
63	BOLT, ACCUMULATOR HOUSING
86	GASKET, SPACER PLATE TO CASE
87	GASKET, VALVE BODY TO SPACER PLATE
88	BOLT, ACCUMULATOR HOUSING

HH0126-2004R-R2

Figure 12 — Accumulator Assembly

CONTROL VALVE ASSEMBLY

Figures 5, 13, and 14

Remove or Disconnect

- Raise and suitably support vehicle as described in the 1989 Firebird Service Manual.
- Drain transmission pan.

1. Bolts (74), oil pan (73), and gasket (72).
2. Filter (71) and filter neck seal (70).
3. Screw and washer securing TV cable to the transmission.
4. Electrical connectors.
5. Bolts (80 and 81) and clips (79 and 82).
6. Bolts (54), solenoid (53) and O-ring seal (52).
7. Case electrical connector (39) and O-ring seal (40).
8. Temperature switch (if equipped) and bolt.
9. Pressure switch.
10. TV lever and bracket assembly (69) from cable link (848).
11. TV lever and bracket assembly (69).

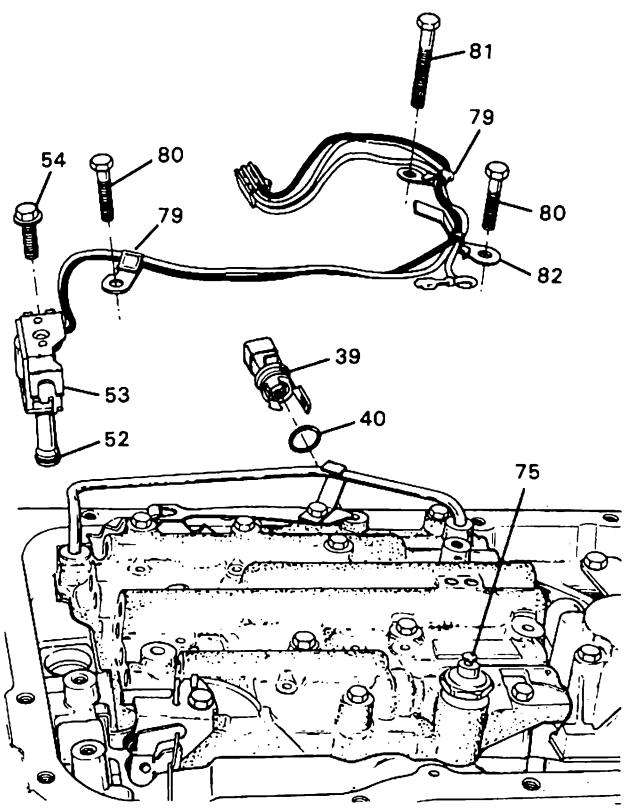

39 CONNECTOR, ELECTRICAL
40 SEAL, "O" RING (ELECTRICAL CONNECTOR)
52 SEAL, "O" RING (SOLENOID)
53 SOLENOID ASSEMBLY
54 BOLTS, HEX WASHER HEAD M6 X 1 X 12.0
75 SWITCH ASSEMBLY, PRESSURE (3RD OR 4TH)
79 CLIP, SOLENOID WIRE (2)
80 BOLT, M6 X 1 X 45
81 BOLT, M6 X 1 X 60
82 CLIP, FILTER RETAINER

HH0028200-4R

Figure 13 — Solenoid, Electrical Connector and Pressure Switch

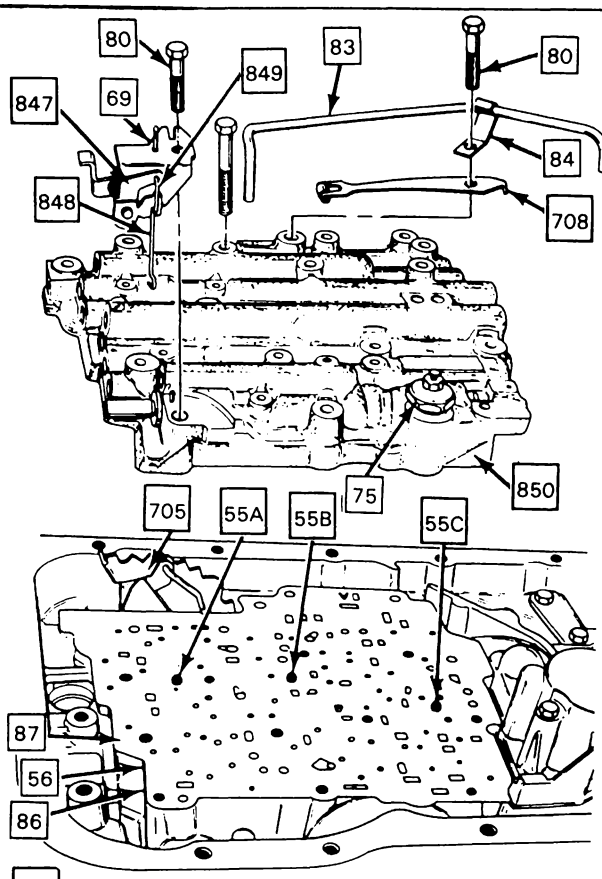

55A	CHECK BALL #11
55B	CHECK BALL #8
55C	CHECK BALL #12
56	PLATE, VALVE BODY SPACER
69	LEVER & BRACKET ASSEMBLY, THROTTLE
75	SWITCH ASSEMBLY, PRESSURE (3RD OR 4TH)
80	BOLT, M6 X 1 X 45
83	PIPE, SIGNAL OIL
84	RETAINER, SIGNAL OIL PIPE
86	GASKET, SPACER PLATE TO CASE
87	GASKET, VALVE BODY TO SPACER PLATE
705	LINK, INSIDE DETENT (LEVER TO VALVE)
708	MANUAL DETENT ROLLER & SPRING ASSEMBLY
847	SPRING, LIFTER (T.V. EXHAUST VALVE)
848	LINK, THROTTLE LEVER TO CABLE
849	LIFTER, T.V. EXHAUST
850	VALVE ASSEMBLY, CONTROL

KC0014-7AS-F-RP

Figure 14 — Removing Control Valve Assembly

12. Manual detent roller and spring assembly (708).
13. Signal oil pipe retainer (84) and signal pipe (83).
- Support control valve assembly.

NOTICE: Do not carry assembly by the attached pipe or damage may result.

14. Remaining valve body bolts and control valve assembly (850).
    - Care must be taken when removing the control valve assembly to prevent the loss of the three checkballs located in the assembly.

NOTICE: Do not damage pressure switches.

15. Checkballs (55A, 55B and 55C).
    - Lay control valve assembly (850) down with spacer plate side up.

Inspect

- Control valve assembly. Refer to AUTOMATIC TRANSMISSION UNIT REPAIR (200-4R) of this supplement for disassembly and inspection of the control valve assembly.

Install or Connect

NOTICE: See "NOTICE" on page 7A-1 of this section for steps 2 and 15.

1. Checkballs (55A, 55B, and 55C) into valve body.
2. Control valve assembly (850) and valve body bolts.

Tighten

- Bolts to 17 N·m (13 lb. ft.).

3. Signal oil pipe (83) and oil pipe retainer (84).
4. Manual detent roller and spring assembly (708).
5. TV lever and bracket assembly (69).
6. TV lever and bracket assembly (69) to cable link (848).
7. Pressure switch (75).
8. Temperature switch (if removed).
9. Case electrical connector (39) and O-ring seal (40).
10. Solenoid (53), O-ring seal (52), and bolts (54).
11. Bolts (80 and 81) and clips (79 and 82).
12. Electrical connectors.
13. Screw and washer.
14. Filter (71) and filter neck seal (70).
15. Oil pan (73), gasket (72) and bolts (74).

Tighten

- Bolts (74) to 20 N·m (15 lb. ft.).

Adjust

- Transmission fluid level.

REAR OIL SEAL

Remove or Disconnect

1. Propeller shaft as described in the 1989 Firebird Service Manual.

2. Floor pan reinforcement.
3. Lip oil seal. Pry out with a suitable tool.

Install or Connect

Tool Required:
J 21426 Seal Installer

1. New lip oil seal, coat outer casing with a non-hardening sealer and tap into place with J 21426.
2. Floor pan reinforcement.
3. Propeller shaft as described in the 1989 Firebird Service Manual.

Adjust

- Transmission fluid level.

TRANSMISSION ASSEMBLY REMOVAL AND INSTALLATION

Figures 15 through 18

A pressure test should be performed before transmission removal to aid in diagnosis. Refer to the 1989 Firebird Service Manual.

Remove or Disconnect

Tool Required:
J 21366 Torque Converter Holding Fixture

1. Negative (-) battery cable.
2. TV cable at throttle lever.
3. Filler tube. Refer to "Filler Tube" in this section.
- Raise and suitably support vehicle as described in the 1989 Firebird Service Manual.
4. Propeller shaft as described in the 1989 Firebird Service Manual.
   - The floor pan reinforcement (if used) may need to be removed if it interferes with removal of the propeller shaft.
5. Speedometer electrical connection at the transmission.
6. Shift linkage at the transmission.
7. Electrical leads at the transmission and any clips that retain leads to the transmission case.
8. Crossover pipe. Refer to EXHAUST SYSTEM (SEC. 6F) of this supplement.
9. Bolts (854) and converter cover (855).
- Mark position of flywheel to converter to aid in reassembly.
10. Converter to flywheel bolts (857).
11. Crossmember. Refer to "Crossmember" in this section.
12. Transmission support (863) to mount nut (864) and washer (865).
13. Catalytic converter hanger to transmission support bolts.
- Lower transmission support (863) with torque arm (861).
14. Bolt (869) and nut (868) at torque arm (861).
15. Transmission support (863).
- Lower transmission to gain access to the oil cooler pipes and TV cable attachments.
16. Oil cooler pipes.
   - Cap all openings.
17. TV cable.
- Support engine with a suitable tool.
18. Transmission to engine bolts (866).
- Attach J 21366 to converter (1).
19. Transmission assembly, being careful not to damage any cables, pipes or linkage.

Install or Connect

NOTICE: See "Notice" on page 7A-1 of this section.

- Raise transmission into place.
- Remove J 21366.

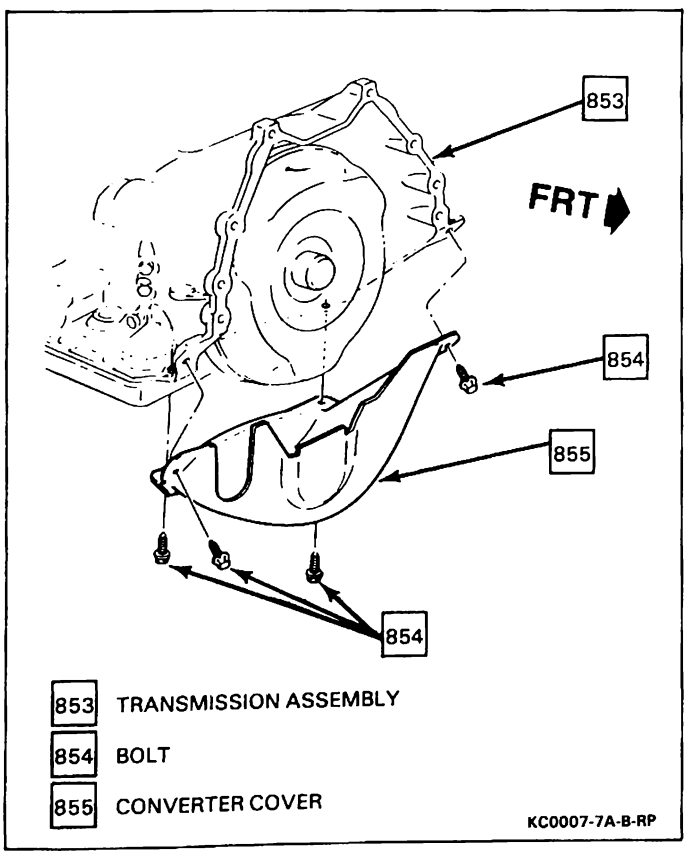

Figure 15 — Converter Cover

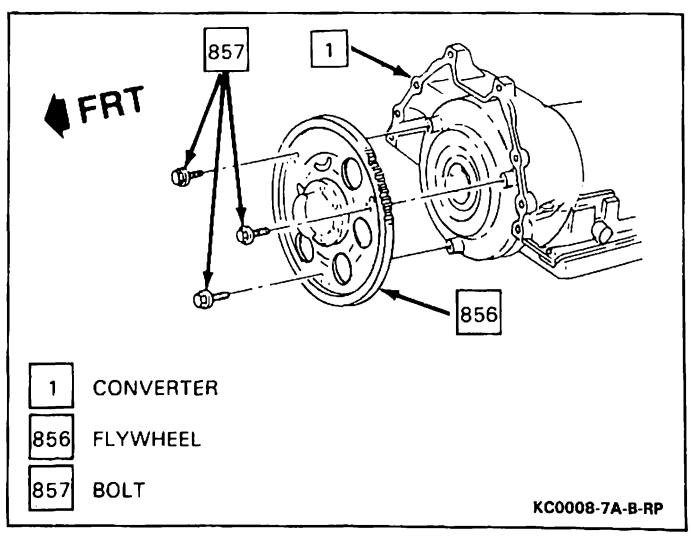

Figure 16 — Converter to Flywheel

1. Transmission to engine bolts (866).

Tighten

- Bolts (866) to 47 N·m (35 lb. ft.).

2. Oil cooler pipes.
3. TV cable.
4. Transmission support (863) to torque arm (861).
5. Bolt (869) and nut (868).

Tighten

- Nut (868) to 27 N·m (20 lb. ft.).

- Raise transmission support (863).

6. Catalytic converter hanger to transmission support bolts.
7. Transmission support to mount washer (865) and nut (864).

Tighten

- Nut (864) to 47 N·m (35 lb. ft.).

8. Crossmember. Refer to "Crossmember" in this section.

- Remove transmission jack.

9. Converter to flywheel bolts (857).
   - Observe marks made during disassembly and align in original position.
   - Make sure weld nuts on the converter are flush with the flywheel.
   - Test converter for freedom of rotation.
   - Finger tighten the three bolts (857).

Tighten

- Bolts (857) to 63 N·m (46 lb. ft.).
- Bolt (857) that was tightened first to 63 N·m (46 lb. ft.) again.

10. Floor pan reinforcement (if removed).
11. Converter cover (855) and bolts (854).

Tighten

- Bolts (854) to 5.8 N·m (51 lb. in.).

12. Crossover pipe. Refer to EXHAUST SYSTEM (SEC. 6F) of this supplement.
13. Shift linkage.
14. Speedometer electrical connection.
15. Electrical leads and retaining clips.
16. Propeller shaft as described in the 1989 Firebird Service Manual.

- Lower vehicle.

17. Filler tube. Refer to "Filler Tube" in this section.
18. TV cable at throttle lever.
19. Negative (-) battery cable.

Clean

NOTICE: Transmission oil cooler flushing must be performed when a transmission is removed for service. The flushing procedure should be performed after the installation of the overhauled or replacement assembly. Failure to flush the system may cause damage to the system and its components.

- Transmission oil cooler and oil cooler pipes. Refer to "Oil Cooler Flushing Procedure" in this section.

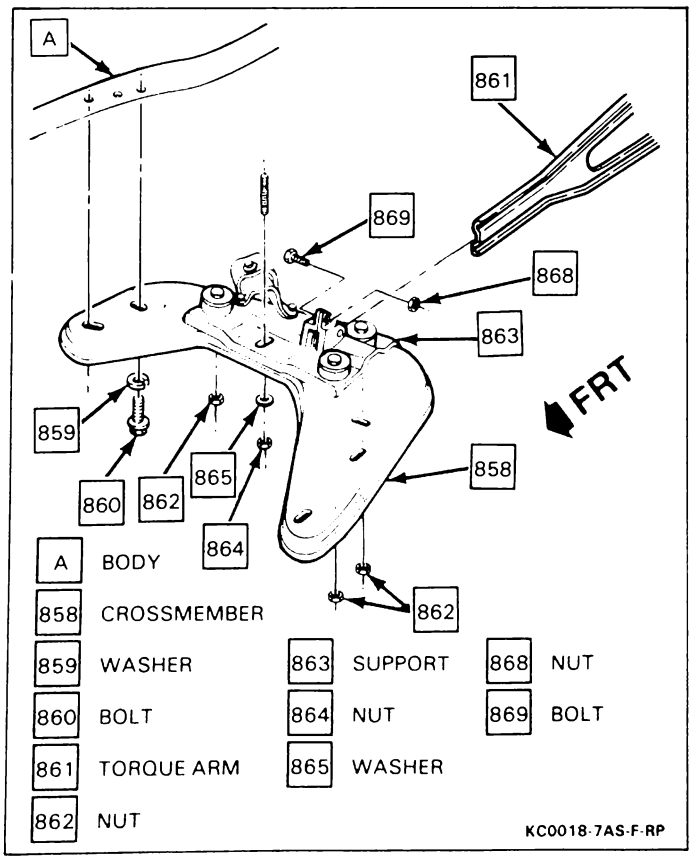

Figure 17 – Transmission Support

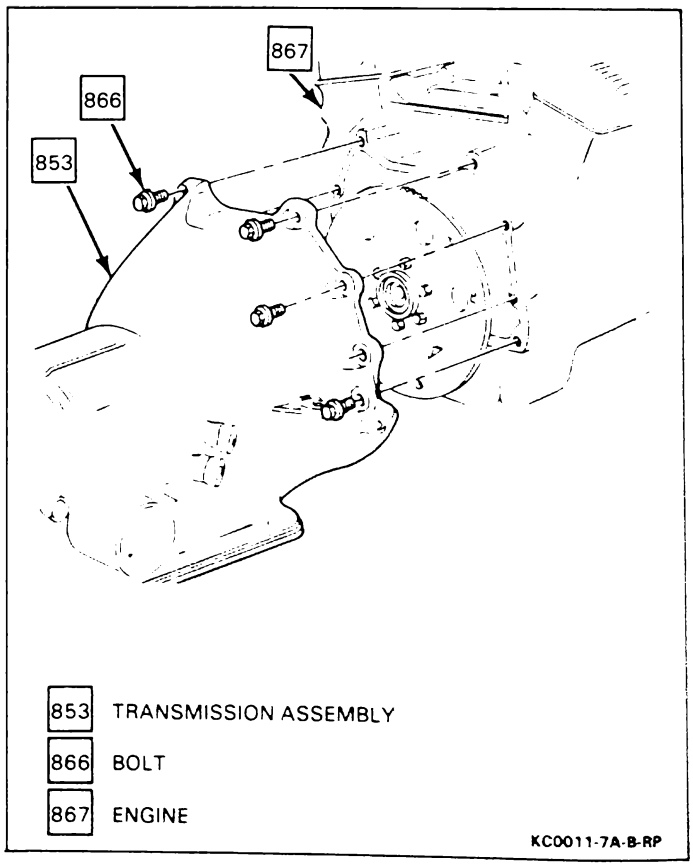

Figure 18 – Transmission to Engine

Adjust

- Shift linkage.
- TV cable.
- Transmission fluid level.

CROSSMEMBER

Figure 17

Remove or Disconnect

- Raise and suitably support vehicle as described in the 1989 Firebird Service Manual.

1. Crossmember-to-transmission support nuts (862).
2. Crossmember-to-frame bolts (860) and washers (859).
3. Crossmember (858).

Install or Connect

1. Crossmember (858) to frame.
2. Crossmember-to-frame washers (859) and bolts (860).

Tighten

- Bolts (860) to 61 N·m (45 lb. ft.).

3. Crossmember-to-transmission support nuts (862).

Tighten

- Nuts (862) to 61 N·m (45 lb. ft.).

- Lower vehicle.

SPECIFICATIONS

FASTENER TORQUE SPECIFICATIONS

Flywheel-to-Torque Converter Bolt	63 N·m (46 lb. ft.)
Converter Cover Bolts	5.8 N·m (51 lb. in.)
Speedometer Driven Gear Retainer Bolt	4.5 N·m (40 lb. in.)
Oil Pan Bolt	20 N·m (15 lb. ft.)
Filler Tube-to-Transmission Bolt	47 N·m (35 lb. ft.)
Control Valve Assembly-to-Valve Body Bolt	17 N·m (13 lb. ft.)
Transmission-to-Engine Bolt	47 N·m (35 lb. ft.)
Transmission Support-to-Crossmember Bolt	55 N·m (41 lb. ft.)
Transmission Support-to-Torque Arm Nut	27 N·m (20 lb. ft.)
Transmission Support-to-Mount Nut	47 N·m (35 lb. ft.)
Crossmember-to-Frame Bolt	61 N·m (45 lb. ft.)
Crossmember-to-Transmission Support Nut	61 N·m (45 lb. ft.)

SPECIAL TOOLS

1

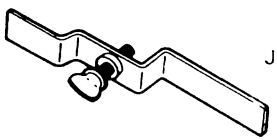

J 21366

2

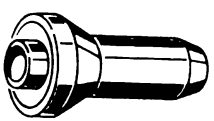

J 21426

3

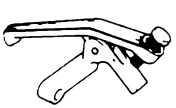

J 29714-A

4

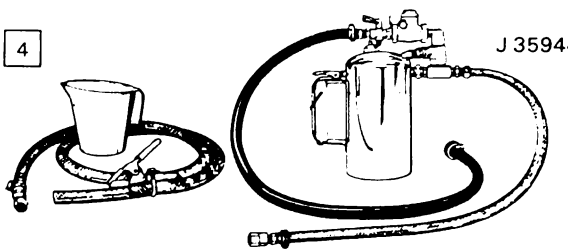

J 35944

5

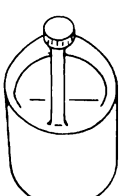

J 35944-20

1 TORQUE CONVERTER HOLDING FIXTURE

2 SEAL INSTALLER

3 SERVO COVER DEPRESSOR

4 OIL COOLER FLUSHING TOOL

5 OIL COOLER FLUSHING SOLUTION

KC0041-7A-B-RP

SECTION 200-4R

MW9

AUTOMATIC TRANSMISSION DIAGNOSIS

CONTENTS

GENERAL DESCRIPTION 200-4R-2
DIAGNOSIS INFORMATION 200-4R-2
Road Test Procedure 200-4R-2
Speed Shift Charts 200-4R-3
Fluid Pressure Check Procedure 200-4R-3
Clutch Application Chart 200-4R-5
Diagnosis Charts 200-4R-6
Fluid Flow Diagrams 200-4R-19
Electrical Wiring Diagrams 200-4R-46
Fluid Passages 200-4R-47
Torque Converter Clutch Diagnosis 200-4R-51
Torque Converter Evaluation 200-4R-51

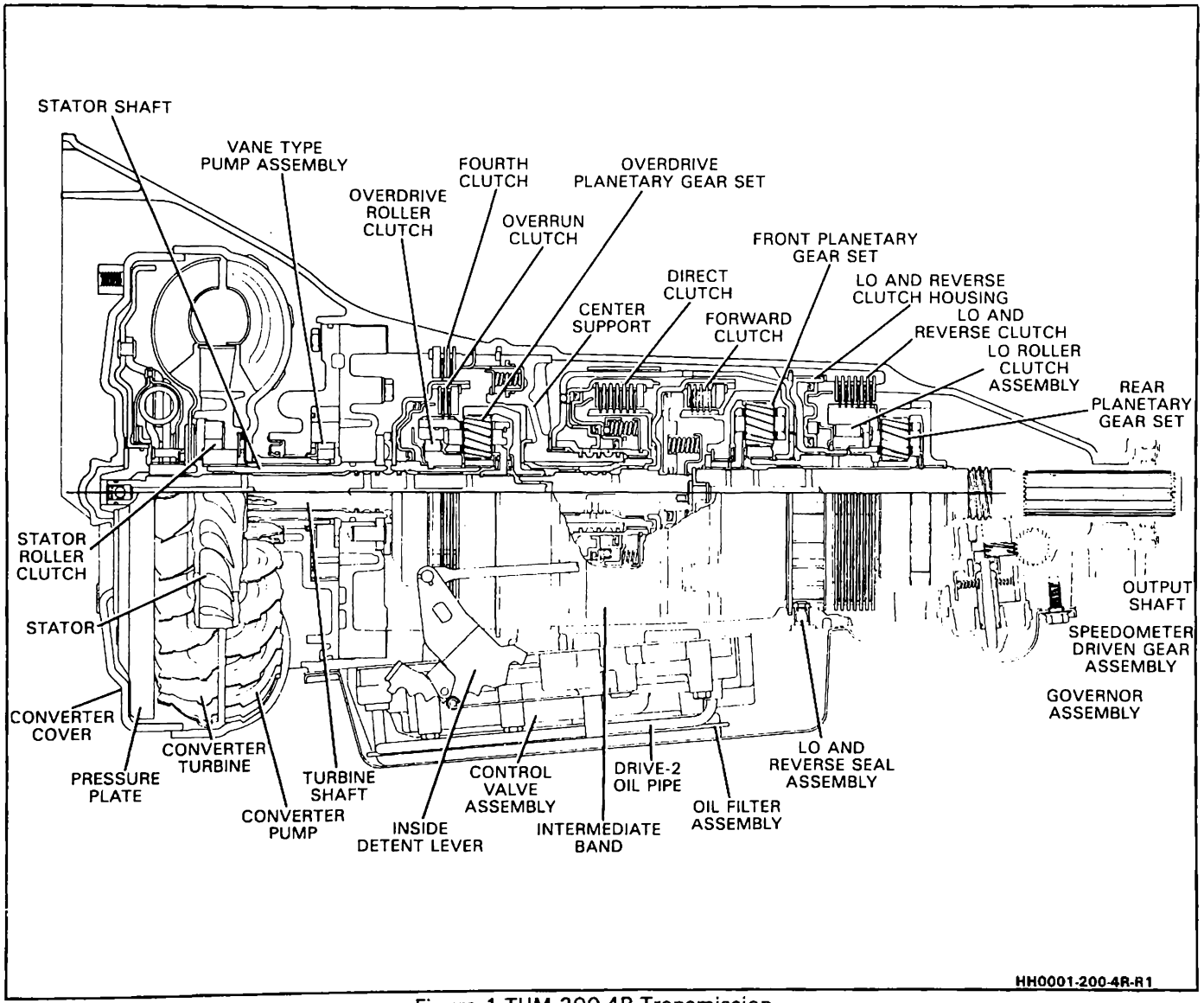

Figure 1 THM 200-4R Transmission

GENERAL DESCRIPTION

The THM 200-4R is a fully automatic transmission for rear wheel drive vehicles which provides four forward gear ranges and a reverse.

The major components of this transmission are:

- Torque Converter Clutch Asm.
- Vane Type Oil Pump
- Intermediate Band Asm.

- Five Multiple Disc Clutches
- Two Planetary Gear Sets
- Two Roller Clutches
- Valve Body Asm.

The oil pressure and shift points are controlled by throttle opening via a throttle valve cable. (See Section 7A for T.V. cable information).

P - Park position prevents the vehicle from rolling either forward or backward. (For safety reasons the parking brake should be used in addition to the park position).

R - Reverse allows the vehicle to be operated in a rearward direction.

N - Neutral allows the engine to be started and operated without driving the vehicle. If necessary this position may be selected if the engine must be restarted with the vehicle moving.

D - Overdrive is used for all normal driving conditions. It provides four gear ratios plus converter clutch operation. Downshifts are available for safe passing by depressing the accelerator.

3 - Drive position is used for city traffic, hilly terrain, and trailer towing. It provides three gear ranges. Again, downshifts are available by depressing the accelerator.

2 - Manual second is used to provide acceleration and engine braking. This range may be selected at any vehicle speed.

1 - Manual Lo is used to provide maximum engine braking. This range may also be selected at any vehicle speed.

DIAGNOSIS INFORMATION

ROAD TEST PROCEDURE

- Perform the road test following the sequence given
- MPH (KPH) shift points will vary with actual throttle position and driver habits
- Compare the results of the test with speed shift chart information. Use these results with the diagnosis information in the specific Automatic Transmission Unit Repair Section the evaluate the transmission.
- This test should only be performed when traffic and road conditions permit
- Observe all traffic safety regulations

Garage Shift Check

1. Start engine
2. Depress brake pedal
3. Move gear selector:
   - "Park" (P) to "Reverse" (R)
   - "Reverse" (R) to "Neutral" (N) to "Drive" (D)

   Gear selections should be immediate and not harsh.

Upshifts and Torque Converter Clutch (TCC) Apply (Figure 2)

With gear selector in "Overdrive" (D)

1. Accelerate using a steady increasing throttle pressure
2. Note the shift speed point gear engagements for:
   - 2nd gear
   - 3rd gear
   - Overdrive
3. Note the speed shift point for TCC apply. This should occur while in Third Gear or Overdrive. If the apply is not noticed, refer to the Preliminary Torque Converter Clutch Diagnosis information contained in this section of the Service Manual.

Important

The torque converter clutch will not engage if engine coolant has not reached a minimum operating temperature of approximately 54°C (130°F).

Part Throttle Detent Downshift

At vehicle speeds of 40-55 MPH (64-88 KPH) quickly depress the accelerator to a half open position and observe:

- TCC releases
- Transmission downshift to 3rd gear immediately

Full Throttle Detent Downshift

At vehicle speeds of 40-55 MPH (64-88 KPH) quickly depress the accelerator to a wide open position and observe:

- TCC releases
- Transmission downshifts to 3rd gear immediately

Manual Downshift

1. At vehicle speeds of 40-55 MPH (64 to 88 KPH) release the accelerator pedal while moving the gear selector to "Third" gear (D) and observe:
   - TCC release
   - Transmission downshift to 3rd gear should be immediate
   - Engine should slow vehicle down
2. Move gear selector to "Overdrive" and accelerate to 40-45 MPH (64-72 KPH). Release the accelerator pedal while moving the gear selector to "Second" gear (2) and observe:
   - TCC Release
   - Downshift to second gear should be immediate
   - Engine should slow vehicle down
3. Move gear selector to "Overdrive" (D) and accelerate to 25 MPH (40 KPH). Release the accelerator pedal while moving the gear selector to "First" gear (1) and observe:
   - TCC release
   - Transmission downshift to 1st gear should be immediate
   - Engine should slow vehicle down

Coastdown Downshift

1. With the gear selector in "Overdrive" (D) accelerate to 4th gear with TCC applied.
2. Release the accelerator pedal and lightly apply the brakes to observe:
   - TCC release
   - Shift points for downshifts.

Manual Gear Range Selection

MANUAL THIRD (D)

1. With vehicle stopped, place gear selector in "Third" (D) and accelerate to observe:
   - The first to second gear shift point
   - The second to third gear shift point

MANUAL SECOND (2)

2. With vehicle stopped, place gear selector in "Second" (2) and accelerate to observe:
   - The first to second gear shift point
3. Accelerate to 25 MPH (40 KPH) and observe:
   - That a second to third gear shift does not occur
   - That TCC does not engage

MANUAL FIRST (1)

1. With vehicle stopped, place gear selector in "First" (1) and accelerate to 15 MPH (24 KPH) and observe:
   - That no upshift occurs
   - That TCC does not engage

REVERSE

1. With vehicle stopped, place gear selector in "Reverse" (R) and slowly accelerate to observe reverse gear operation.
   All possible throttle position and corresponding MPH shift point information has not been provided.

TRANSMISSION PRESSURE CHECK PROCEDURE

Inspect

- Fluid level
- TV cable adjustment
- Manual linkage
- Engine mechanical, emissions, electrical and fuel delivery systems

Install or Connect (Figure 3)

- Oil pressure gage
- Tachometer

1989 THM 200-4R SHIFT SPEED CHART

MODEL	1-2 MIN THROTTLE	2-3 MIN THROTTLE	3-4 MIN THROTTLE	4-3 PART THROTTLE	3-2 PART THROTTLE	4-3 COAST DOWN	3-2 COAST DOWN	2-1 COAST DOWN
CTF, CUF	15	24	31	58	52	29	22	12
KJF	10	20	26	40	29	25	19	7
KTF	12	21	29	45	33	28	19	9

NOTES:
1. ALL SPEEDS INDICATED ARE IN MILES PER HOUR. CONVERSION TO KPH = MPH × 1.609.
2. SHIFT POINTS WILL VARY SLIGHTLY DUE TO ENGINE LOADS AND VEHICLE OPTIONS.

HH0008-HD-3

Figure 2 Shift Speed Chart

PRELIMINARY CHECK PROCEDURE

CHECK TRANSMISSION FLUID LEVEL
CHECK AND ADJUST T.V. CABLE
CHECK OUTSIDE MANUAL LINKAGE AND CORRECT
CHECK ENGINE TUNE
INSTALL FLUID PRESSURE GAGE
CONNECT TACHOMETER TO ENGINE

CHECK FLUID PRESSURES IN THE FOLLOWING MANNER:

Minimum T.V. Line Pressure Check
Set the T.V. cable to specification; and with the brakes applied, take the line pressure readings in the ranges and at the engine r.p.m. indicated in the chart below.

Full T.V. Line Pressure Check
Full T.V. line pressure readings are obtained by tying or holding the T.V. cable to the full extent of its travel; and with the brakes applied, take the line pressure readings in the ranges and at the engines r.p.m. indicated in the chart below.

***NOTICE** Total running time for this combination not to exceed 2 minutes.

CAUTION Brakes must be applied at all times.

1989 200-4R AUTOMATIC TRANSMISSION FLUID PRESSURE					
MODEL	RANGE	NORMAL FLUID PRESSURE AT MINIMUM T.V.		NORMAL FLUID PRESSURE AT FULL T.V.	
		kPa	P.S.I.	kPa	P.S.I.
CTF, CUF KJF, KTF	PARK & NEUTRAL @ 1000 RPM	389 - 439 389 - 439	56 - 64 56 - 64	829 - 933 797 - 896	120 - 135 116 - 130
CTF, CUF KJF, KTF	*REVERSE @ 1000 RPM	725 - 817 725 - 817	105 - 118 105 - 118	1544 - 1737 1485 - 1667	224 - 252 215 - 242
CTF, CUF KJF, KTF	*DRIVE (D4) & MANUAL THIRD (D3) @ 1000 RPM	389 - 439 389 - 439	56 - 64 56 - 64	829 - 933 797 - 896	120 - 135 116 - 130
CTF, CUF KJF, KTF	*MANUAL SECOND (D2) & LO (D1) @ 1000 RPM	846 - 953 846 - 953	123 - 138 123 - 138	846 - 953 846 - 953	123 - 138 123 - 138

Line pressure is basically controlled by pump output and the pressure regulator valve. In addition, line pressure is boosted in Reverse, Second and Lo by the reverse boost valve.

Also, in the Neutral, Drive, Intermediate and Reverse positions of the selector lever, the line pressure should increase with throttle opening because of the T.V. system. The T.V. system is controlled by the T.V. cable, the throttle lever and bracket assembly and the T.V. link, as well as the control valve assembly.

H-200-4R-165-11

Figure 3 Preliminary Check Procedure

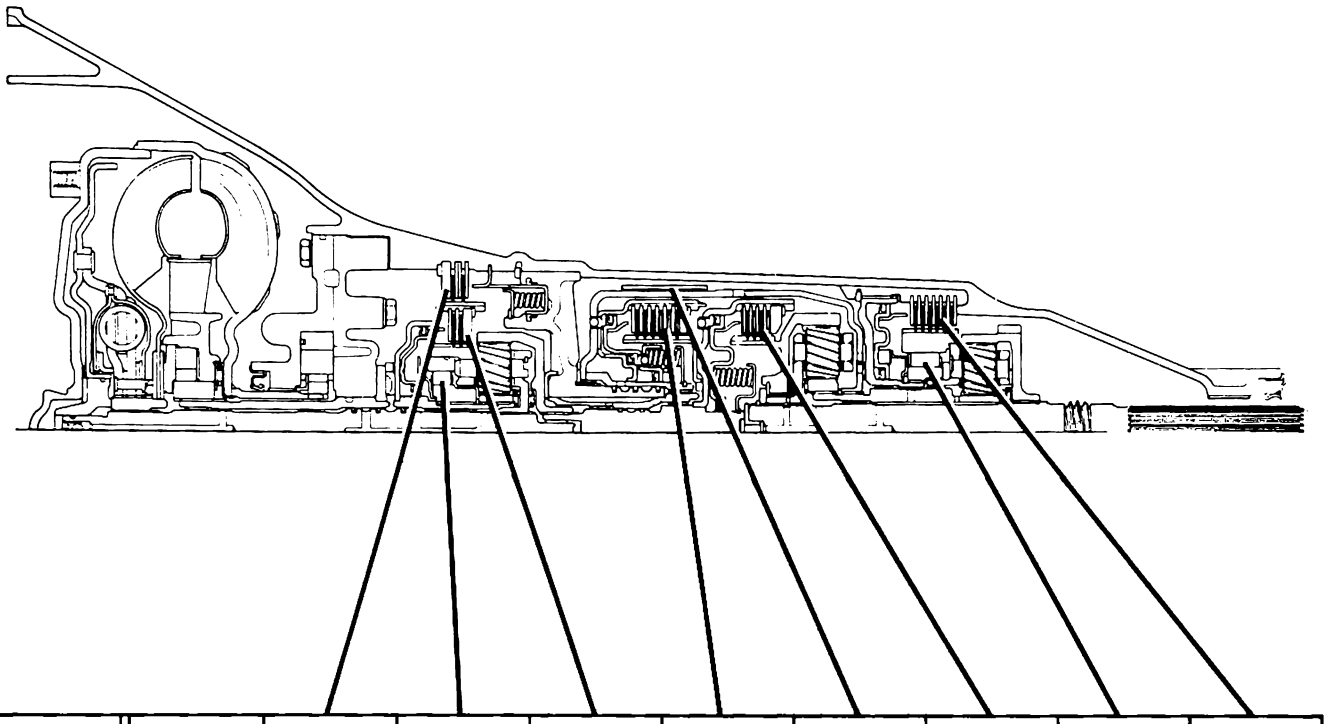

RANGE	GEAR	FOURTH CLUTCH	OVERDRIVE ROLLER CLUTCH	OVERRUN CLUTCH	DIRECT CLUTCH	INTERMEDIATE BAND	FORWARD CLUTCH	LO-ROLLER CLUTCH	LO-REVERSE CLUTCH
P-N			HOLDING						
D	FIRST		HOLDING				APPLIED	HOLDING	
	SECOND		HOLDING			APPLIED	APPLIED		
	THIRD		HOLDING		APPLIED		APPLIED		
	FOURTH	APPLIED			APPLIED		APPLIED		
D	FIRST			APPLIED			APPLIED	HOLDING	
	SECOND			APPLIED		APPLIED	APPLIED		
	THIRD			APPLIED	APPLIED		APPLIED		
2	FIRST			APPLIED			APPLIED	HOLDING	
	SECOND			APPLIED		APPLIED	APPLIED		
1	FIRST			APPLIED			APPLIED		APPLIED
R	REVERSE		HOLDING		APPLIED				APPLIED

HH0154-200-4R

Figure 4 Clutch Application Chart

CONDITION	INSPECT COMPONENT	FOR CAUSE
OIL LEAK	• Oil Pan (65)	– Bolts (64) not correctly torqued. – Improperly installed or damaged pan gasket (66). – Oil pan gasket mounting face not flat.
	• Filler Pipe	– Multi lip seal damaged or missing.
	• Filler Pipe Bracket	– Mispositioned.
	• Throttle Valve Cable	– Multi lip seal missing, damaged or improperly installed.
	• Rear Seal Assembly (33)	– Damaged or improperly installed.
	• Speedometer Driven Gear	– "O" ring damaged.
	• Manual Shaft	– Lip seal damaged or improperly installed.
	• Case (12)	– Line pressure tap plug. – Fourth clutch pressure tap plug. – Porous.
	• Intermediate Servo	– "O" rings (17) damaged.
	• Oil Pump Assembly (7)	– Front pump seal (201) leaks: Seal lip cut – check converter hub for nicks, etc. – Front pump attaching bolts (5) loose or bolt seal damaged or missing. – Front pump housing "O" ring (10) damaged or cut. – Porous casting. – Inspect converter weld area.
	• Vent Pipe	– Transmission over filled. – Water in oil. – Foreign matter between pump (7) and case (12) or between pump cover (217) and body (203). – Case porous; front pump cover mounting face shy of stock near breather. – Pump to case gasket (11) mispositioned. – Incorrect fluid level indicator. – Pump shy of stock on mounting faces, porous casting, breather hole plugged in pump cover.
NO DRIVE IN DRIVE RANGE (Install Pressure Gage)	• Oil Level	– Incorrect. – External leaks.
	• Manual Linkage	– Misadjusted.

HH0002-2004R-R1

Figure 5 Diagnosis Chart

CONDITION	INSPECT COMPONENT	FOR CAUSE
NO DRIVE IN DRIVE RANGE (Install Pressure Gage) (Continued)	• Oil Pressure	— Plugged or restricted oil filter (68). — Cut or missing oil filter seals (67). — Pump assembly - pressure regulator (218) stuck. — Pump rotor - tangs damaged by converter. — Porosity in oil filter to pump intake bore.
	• Overdrive Unit	— Springs missing in the roller clutch (518). — Rollers galled or missing.
	• Forward Clutch	— Piston (622) cracked, seals (621) missing, damaged; clutch plates (626) burned; snap ring out of groove. — Oil seal rings (504) missing or damaged on turbine shaft; leak in feed circuits; pump to case gasket mispositioned or damaged. — Cup plug leaking or missing in the rear of the forward clutch shaft in the clutch apply passage.
	• Lo & Reverse Roller Clutch (658)	— Springs missing. — Rollers galled or missing.
HIGH OR LOW OIL PRESSURE (Refer To Oil Pressure Checks)	• Throttle Valve Cable	— Misadjusted, binding, unhooked, broken or wrong link.
	• Throttle Valve Assembly	— Damaged or leaking. — Throttle lever and bracket assembly binding, unhooked or mispositioned. — Throttle valve (302) or plunger valve (305) binding.
	• Pressure Regulator Valve (218)	— Binding.
	• T.V. Boost Valve (222)	— Binding. — Wrong valve - causing low oil pressure only.
	• Reverse Boost Valve (220)	— Binding.
	• Manual Valve (345)	— Unhooked. — Mispositioned.
	• Pressure Relief Valve	— Ball (231) missing. — Spring (232) damaged.
	• Pump (7)	— Slide (206) stuck. — Slide seal (211) damaged or missing. — Decrease air bleed orifice missing or damaged - causing high oil pressure. — Decrease air bleed orifice plugged - causing low oil pressure.
	• T.V. Limit Valve (309)	— Binding

HH0003-2004R-R1

Figure 6 Diagnosis Chart

CONDITION	INSPECT COMPONENT	FOR CAUSE
HIGH OR LOW OIL PRESSURE (Refer To Oil Pressure Checks) (Continued)	• Line Bias Valve (318)	— Binding in open position - causing high oil pressure. — Binding in closed position - causing low oil pressure.
	• Control Valve Assembly Spacer Plate (56) & Case (12)	— Correct orifices and passages.
1-2 SHIFT - FULL THROTTLE ONLY	• Throttle Valve Cable	— Binding, unhooked or broken. — Misadjusted.
	• Throttle Lever & Bracket Assembly (69)	— Binding or unhooked.
	• T.V. Exhaust Ball Lifter (72) Or No. 5 Ball (55N)	— Binding, mispositioned or unhooked. (Allowing No. 5 ball to seal causes full T.V. pressure regardless of throttle valve position.)
	• Throttle Valve (302) & Plunger (305)	— Binding.
	• Control Valve Assembly (74)	— Valve body gaskets (86, 87) leaking, damaged, incorrectly installed.
	• Case Assembly (12)	— Porosity.
NO 1-2 SHIFT	• Governor (41) & Governor Feed Passages	— Plugged governor oil feed orifice in spacer plate. — Ball or balls missing in governor assembly. — Inner governor cover rubber "O" ring seal missing or leaking. — Governor shaft seal missing or damaged. — Driven gear stripped. — Weights binding on pin. — Driven gear not engaged with governor shaft.
	• Control Valve Assembly (74)	— 1-2 shift (331), Lo 1st/Detent (333), or 1-2 throttle valve (334) stuck in downshift position. — Spacer plate gaskets (86, 87) in wrong position.
	• Case (12)	— Porosity in case channels or undrilled 2nd oil feed hole. — Excessive leakage between case bore and intermediate band apply rings. — Intermediate band anchor pin (47) missing or unhooked from band. — Broken or missing band (601).

HH0004-2004R-R1

Figure 7 Diagnosis Chart

CONDITION	INSPECT COMPONENT	FOR CAUSE
NO 1-2 SHIFT (Continued)	• Intermediate Servo Assy.	— Servo cover oil seal ring (17) missing. — Porosity in servo; cover (16), inner piston (21) or outer piston (19). — Wrong intermediate band apply pin (27). — Incorrect usage of cover and piston.
	• 1-2 Accumulator	— Housing bolts (63, 88) loose. — Housing (62) face damaged. — Missing or damaged accumulator plate (57).
NO 2-3 SHIFT	• Control Valve Assembly (74) & Spacer Plate (56)	— 2-3 shift valve (341) or 2-3 throttle valve (342) stuck in the downshift position. — Valve body gaskets (86, 87) leaking, damaged or incorrectly installed. — Reverse/3rd check ball (55E) not seating, damaged or missing.
	• Case (12)	— Porosity in case channels.
	• Center Support (537)	— Direct clutch feed passage in the center support plugged or not drilled through. — Steel oil seal rings (539) on center support damaged.
	• Direct Clutch	— Inner oil seal ring (606) missing or damaged on piston (608). — Center oil seal ring missing or damaged on direct clutch hub. — Check ball and/or retainer (607) damaged or missing from direct clutch piston. — Direct clutch piston or housing (604) damaged or missing. — Direct clutch plates (613) damaged or missing. — Direct clutch backing plate snap ring (615) out of groove. — Release spring guide (611) mislocated, preventing piston check ball from seating in retainer.
	• Intermediate Servo Assy. (Third Clutch Accumulator Oil Passages)	— Servo to case oil seal ring broken or missing on intermediate servo piston. — Intermediate servo and/or capsule missing or damaged. — Exhaust hole in case between servo piston seal rings plugged or undrilled. — Bleed orifice cup plug missing from intermediate servo pocket in case.
NO REVERSE OR SLIPS IN REVERSE (Install Pressure Gage)	• Throttle Valve Cable	— Binding or misadjusted.
	• Manual Linkage	— Misadjusted.
	• Throttle Valve (302)	— Binding.

HH0005-2004R-R1

Figure 8 Diagnosis Chart

CONDITION	INSPECT COMPONENT	FOR CAUSE
NO REVERSE OR SLIPS IN REVERSE (Install Pressure Gage) (Continued)	• T.V. Limit Valve (309)	— Binding.
	• Line Bias Valve (318)	— Binding.
	• Reverse Boost Valve (220)	— Binding in pressure regulator bore.
	• Reverse/3rd (55E) Or Lo/Reverse (55H) Check Ball	— Missing or seat in spacer plate damaged.
	• Reverse Clutch	— Piston (649) cracked, or missing inner or outer seals (648). Clutch plates (655) burned. — Reverse oil seal in case missing or damaged. — Missing clutch plate or wave plate.
	• Center Support (537)	— Attaching bolts (538) loose or missing. — Passages blocked or not drilled. — Porosity.
	• Direct Clutch Housing (604)	— Piston (608) or housing cracked. — Inner or outer piston seal (606) missing or damaged. — Check ball in either the direct clutch housing (603) or the piston (607) missing or damaged. — Plates (613) burned.
	• Spacer Plate (56)	— Lo/Reverse overrun clutch orifice plugged.
DRIVE IN NEUTRAL	• Manual Linkage	— Misadjusted or disconnected.
	• Forward Clutch	— Clutch does not release. — Plates (626) burned together.
	• Case (12)	— Cross leakage to forward clutch passage (D4).
SLIP IN 1-2 SHIFT	• Oil Level	— Low oil level.
	• Spacer Plate (56) & Gaskets (86, 87)	— Gaskets damaged or incorrectly installed.
	• Accumulator Valve (322)	— Valve sticking in valve body causing low 1-2 accumulator pressure. — Weak or missing spring.
	• 1-2 Accumulator Piston (61)	— Seal (60) leaking, spring (59) broken or missing. — Leak between piston and pin (76). — Piston binding. — Piston bore damaged.
	• Intermediate Band Apply Pin (27)	— Wrong selection of apply pin. — Excessive leakage between apply pin and case. — Apply pin feed hole not completely drilled.

HH0006-2004R-R1

Figure 9 Diagnosis Chart

CONDITION	INSPECT COMPONENT	FOR CAUSE
SLIP IN 1-2 SHIFT (Continued)	• Intermediate Servo Assy.	— Porosity in piston (21, 19). — Cover to servo oil seal ring (17) damaged or missing. — Leak between servo apply pin (27) and case.
	• Throttle Valve Cable	— Not properly adjusted.
	• Throttle Valve (302)	— Binding, causing low T.V. pressure.
	• T.V. Limit Valve (309)	— Binding.
	• Line Bias Valve (318)	— Sticking, causing low line pressure.
	• Intermediate Band (601)	— Worn or burned.
	• Case (12)	— Porosity in 2nd clutch passage.
ROUGH 1-2 SHIFT	• Throttle Valve Cable	— Not adjusted properly. — Binding.
	• Throttle Valve (302) Or T.V. Plunger	— Binding.
	• T.V. Limit Valve (309)	— Binding.
	• Accumulator Valve (322)	— Binding.
	• Line Bias Valve (318)	— Binding.
	• Intermediate Servo Assy.	— Wrong selection apply pin (27). — Servo piston to case oil seal ring (20) damaged or missing. — Bleed cup plug missing in case.
	• 1-2 Accumulator	— Oil ring (60) damaged. — Piston (61) stuck. — Broken or missing spring (59). — Bore damaged.
	• 1-2 Shift Check Ball No. 8 (55B)	— Missing or sticking.
SLIP IN 2-3 SHIFT	• Oil Level	— Low oil level.
	• Throttle Valve Cable	— Not adjusted properly.
	• Throttle Valve (302)	— Binding.
	• Spacer Plate (56) & Gaskets (86, 87)	— Direct Clutch orifice partially blocked in spacer plate. — Gaskets mispositioned or damaged.

HH0007-2004R-R1

Figure 10 Diagnosis Chart

CONDITION	INSPECT COMPONENT	FOR CAUSE
SLIP IN 2-3 SHIFT (Continued)	• Intermediate Servo Assy.	— Servo to case oil seal ring (20) damaged or missing. — Piston (19, 21) or servo bore damaged. — Intermediate servo orifice bleed cup plug in case missing. — Porosity in the case in the servo bore area.
	• Direct Clutch Feed	— Porosity in direct clutch feed channels in case. — Case to support bolts (538) not tight causing leakage. — Direct clutch piston (608) or housing (604) cracked. — Piston seals (606) cut or missing. — Direct clutch plates (613) burned. — Check ball in piston (607) and/or housing (603) missing, damaged or leaking. — Check ball capsule damaged. — Release spring guide mislocated preventing check ball from seating in piston.
	• Center Support (537)	— Channels cross feeding, leaking or restricted. — Oil seal rings (539) damaged or missing.
ROUGH 2-3 SHIFT	• Throttle Valve Cable	— Mispositioned or missing.
	• Throttle Valve (302) & Plunger	— T.V. plunger binding. — Throttle valve binding.
	• T.V. Limit Valve (309)	— Binding.
	• Intermediate Servo Assy.	— Exhaust hole undrilled or plugged between intermediate servo piston seals, not allowing intermediate servo piston to complete its stroke.
	• 3-2 Exhaust Check Ball No. 4 (55F)	— Missing or mispositioned.
	• 3rd Accumulator Check Ball No. 2 (55D)	— Missing or mispositioned.
SLIP IN 3-4 SHIFT	• Oil Level	— Low.
	• Control Valve Assembly (74) & Spacer Plate (56)	— Gaskets (86, 87) or spacer plate (56) damaged or incorrectly installed. — Accumulator valve (322) sticking causing low 3-4 accumulator pressure. — Weak or missing accumulator valve spring.
	• 3-4 Accumulator	— Piston (49) stuck. — Bore damaged. — Oil ring (50) damaged.

HH0008-2004R-R1

Figure 11 Diagnosis Chart

CONDITION	INSPECT COMPONENT	FOR CAUSE
SLIP IN 3-4 SHIFT (Continued)	• Center Support (537)	— Porosity. — Center support attaching bolts (538) loose. — Fourth clutch piston (534) surface damaged. — Fourth clutch piston seals (535) damaged. — Proper plate (508) usage (see Clutch Plate Usage Chart). — Fourth clutch plates burned.
	• Case (12)	— Porosity. — 1-2 accumulator housing bolts (63, 88) loose. — 3-4 accumulator piston seal (50) damaged. — 3-4 accumulator leaking between the piston (49) and pin (76). — 3-4 accumulator bore damaged.
ROUGH 3-4 SHIFT	• Throttle Valve Cable	— Mispositioned or missing.
	• Throttle Valve (302) & Plunger	— Binding.
	• T.V. Limit Valve (309)	— Binding.
	• 3-4 Accumulator	— Piston (49) stuck. — Bore damaged.
	• Fourth Clutch	— Piston (534) binding.
NO CONVERTER CLUTCH APPLY	• Electrical System (12 volts must be supplied to the solenoid for it to engage)	— Defective solenoid (53). — Damaged electrical connector (39). — Defective pressure switch. — Wire grounded.
	• Control Valve Assembly (74) & Spacer Plate (56)	— Converter clutch shift valve (337) or throttle valve (302) stuck.
	• Pump Assembly (7)	— Orifice plugged for converter signal oil in pump. — "O" ring (52) damaged or missing on solenoid. — Orificed cup plug (238) missing in oil cooler passage in pump. — Pump to case gasket (11) damaged or mispositioned. — Converter clutch apply valve (227) stuck. — Cup plug missing from apply passage.
ROUGH CONVERTER CLUTCH APPLY	• Converter Clutch Pressure Plate	— Damaged.
	• Check Ball (501) In End Of Turbine Shaft (503)	— Damaged or missing.

HH0009-2004R-R1

Figure 12 Diagnosis Chart

CONDITION	INSPECT COMPONENT	FOR CAUSE
NO CONVERTER CLUTCH RELEASE	• Converter Clutch Apply Valve	– Stuck.
	• Converter	– Damaged.
	• Pump	– Cup plug in release passage missing.
	• Turbine Shaft (503)	– Seal (504) missing or damaged. – Hole not drilled through.
NO 3-4 SHIFT (Install Pressure Gage To Fourth Clutch Pressure Tap)	• Control Valve Assembly (74) & Spacer Plate (56)	– 3-4 shift valve or 3-4 throttle valve stuck. – Orifice in spacer plate plugged.
	• Center Support (537)	– Oil passages plugged or not drilled. – Center support attaching bolts (538) loose or missing. – Fourth clutch piston (534) cracked or damaged. – Fourth clutch piston seals (535) damaged, missing or improperly assembled. – Improper plate usage (see Clutch Plate Usage Chart). – Fourth clutch plates burned. – Overrun clutch plates binding.
	• Case (12)	– Porosity. – Orificed cup plug missing in 3-4 accumulator passage in case. – Leakage between accumulator piston (49) and pin (76). – 3-4 accumulator bore damaged.
NO MANUAL 3RD OR 2ND	• Turbine Shaft (503) & Overrun Clutch	– D-3 oil passage not drilled or plugged in turbine shaft. – D-3 oil passage not drilled through in overrun clutch hub. – Oil seals (512) missing or damaged in the overrun clutch piston (511). – Overrun clutches burned. – Overrun clutch backing plate snap ring (515) out of groove.

HH0010-2004R-R1

Figure 13 Diagnosis Chart

CONDITION	INSPECT COMPONENT	FOR CAUSE
NO ENGINE BRAKING IN MANUAL LO-1ST GEAR	• Control Valve Assembly (74) & Spacer Plate (56)	— Manual linkage misadjusted. — D-3 orifice in spacer plate plugged. — Valve body gaskets (86, 87) leaking, damaged or incorrectly installed. — D-2 oil pipe leaking or out of position. — Lo overrun clutch valve (330) binding in valve body. — Lo/Reverse check ball (#10) (55H) mispositioned or missing. — Lo/Detent check ball (#9) (55G) mispositioned or missing. — Lo/Reverse overrun clutch orifice in spacer plate plugged. — PT/D-3 check ball (#3) (55M) mispositioned or missing.
	• Turbine Shaft (503) & Overrun Clutch	— D-3 oil passage not drilled or plugged in turbine shaft. — D-3 oil passage not drilled through in overrun clutch hub. — Oil seals (512) missing or damaged in the overrun clutch piston (511). — Overrun clutches burned. — Overrun clutch backing plate snap ring (515) out of groove.
	• Case (12)	— Porosity.
	• Lo/Reverse Clutch Assy.	— Piston seals (648) broken or missing. — Clutch housing snap ring (644) out of case. — Piston (649) or housing (646) cracked or porous. — Cup plug or rubber seal missing or damaged between case and lo/reverse clutch housing.
NO ENGINE BRAKING IN MANUAL 2ND-2ND GEAR	• Control Valve Assembly (74) & Spacer Plate (56)	— Manual linkage misadjusted. — Valve body gaskets (86, 87) leaking, damaged, or incorrectly installed. — D-2 oil pipe leaking or out of position. — D-3 orifice in spacer plate plugged. — PT/D-3 check ball (#3) (55M) mispositioned or missing.
	• Case (12)	— Porosity.
	• Intermediate Servo Assy.	— Servo cover to case oil seal ring (17) missing or damaged.
	• Intermediate Band (601)	— Off anchor pin (47). — Broken or burned.

HH0011-2004R-R1

Figure 14 Diagnosis Chart

CONDITION	INSPECT COMPONENT	FOR CAUSE
NO ENGINE BRAKING IN MANUAL 2ND-2ND GEAR (Continued)	• Turbine Shaft (503) & Overrun Clutch	– D-3 oil passage not drilled through in overrun clutch hub. – Oil seals (512) missing or damaged in the overrun clutch piston. – D-3 oil hole not drilled or plugged in turbine shaft. – Overrun clutches burned. – Overrun clutch backing plate snap ring (515) out of groove.
NO ENGINE BRAKING IN MANUAL 3RD-3RD GEAR	• Control Valve Assembly (74) & Spacer Plate (56)	– Manual linkage misadjusted. – D-3 orifice in spacer plate plugged. – Valve body gaskets (86, 87) leaking, damaged, or incorrectly installed. – PT/D-3 check ball (#3) (55M) mispositioned or missing.
	• Turbine Shaft (503) & Overrun Clutch	– D-3 oil passage not drilled or plugged in turbine shaft. – D-3 oil hole not drilled through in overrun clutch hub. – Oil seals (512) missing or damaged in the overrun clutch piston (511). – Overrun clutches burned. – Overrun clutch backing plate snap ring (515) out of groove.
WILL NOT HOLD IN PARK	• Manual Linkage	– Misadjusted.
	• Internal Linkage	– Parking pawl (712) binding in case. – Actuator rod, spring or plunger (709) damaged. – Parking pawl broken. – Parking bracket (711) loose or damaged. – Manual shaft to case pin (703) missing or mispositioned.
	• Inside Detent Lever & Pin Assembly (704)	– Nut (707) loose. – Hole in lever worn or damaged.
	• Manual Detent Roller & Spring Assembly (708)	– Bolt (80) loose that holds roller assembly to valve body. – Pin or roller damaged, mispositioned or missing.
NO PART THROTTLE DOWNSHIFTS (Install Pressure Gage)	• Throttle Valve (302)	– Binding.
	• T.V. Limit Valve (309)	– Binding.
	• Spacer Plate (56)	– Hole plugged or undrilled.

HH0012-2004R-R1

Figure 15 Diagnosis Chart

CONDITION	INSPECT COMPONENT	FOR CAUSE
NO PART THROTTLE DOWNSHIFTS (Install Pressure Gage) (Continued)	• Valve Body Gaskets (86, 87)	– Mispositioned or damaged.
	• T.V. Modulator Downshift Valve (314)	– Stuck.
	• Throttle Valve Cable	– Improperly set.
NO PART THROTTLE 4-3 DOWNSHIFT (On Selected Models With A P.T. Passage In The Throttle Plunger Bushing)	• Throttle Plunger Bushing	– Passages not open.
	• 3-4 Throttle Valve Bushing (326)	– Passages not open.
	• PT/D-3 Check Ball (#3) (55M)	– Mispositioned or missing.
	• Valve Body Gaskets (86, 87)	– Mispositioned or damaged.
	• Throttle Valve Cable	– Improperly set.
	• T.V. Limit Valve (309)	– Binding.
LOW OR HIGH SHIFT POINTS (Install Pressure Gage To Line Pressure Tap)	• Throttle Valve Cable	– Binding or misadjusted.
	• T.V. Limit Valve (309)	– Binding.
	• Throttle Valve (302)	– Binding.
	• T.V. Modulator Upshift Valve (312)	– Binding.
	• T.V. Modulator Downshift Valve (314)	– Binding.
	• Valve Body Gaskets (86, 87)	– Mispositioned, leaking or damaged.
	• Throttle Valve Plunger	– Binding.
	• 1-2, 2-3 or 3-4 Throttle Valves (334, 342, 324)	– Binding in bushings.
	• Pressure Regulator Valve (218)	– Binding.
	• T.V. Exhaust Ball (#5) (55N) & Lifter (72)	– Mispositioned, unhooked or missing.
	• Throttle Lever & Bracket Assembly (69)	– Binding, unhooked or loose at mounting valve body bolt (80). – Not positioned at the throttle valve plunger bushing pin locator.
	• Governor Shaft To Cover Seal Ring	– Broken or missing.
	• Governor Cover Gasket (42)	– Broken or missing.
	• Case (12)	– Porosity.

HH0013-2004R-R1

Figure 16 Diagnosis Chart

200-4R TRANSMISSION

FLUID FLOW

AND

CIRCUIT DESCRIPTION

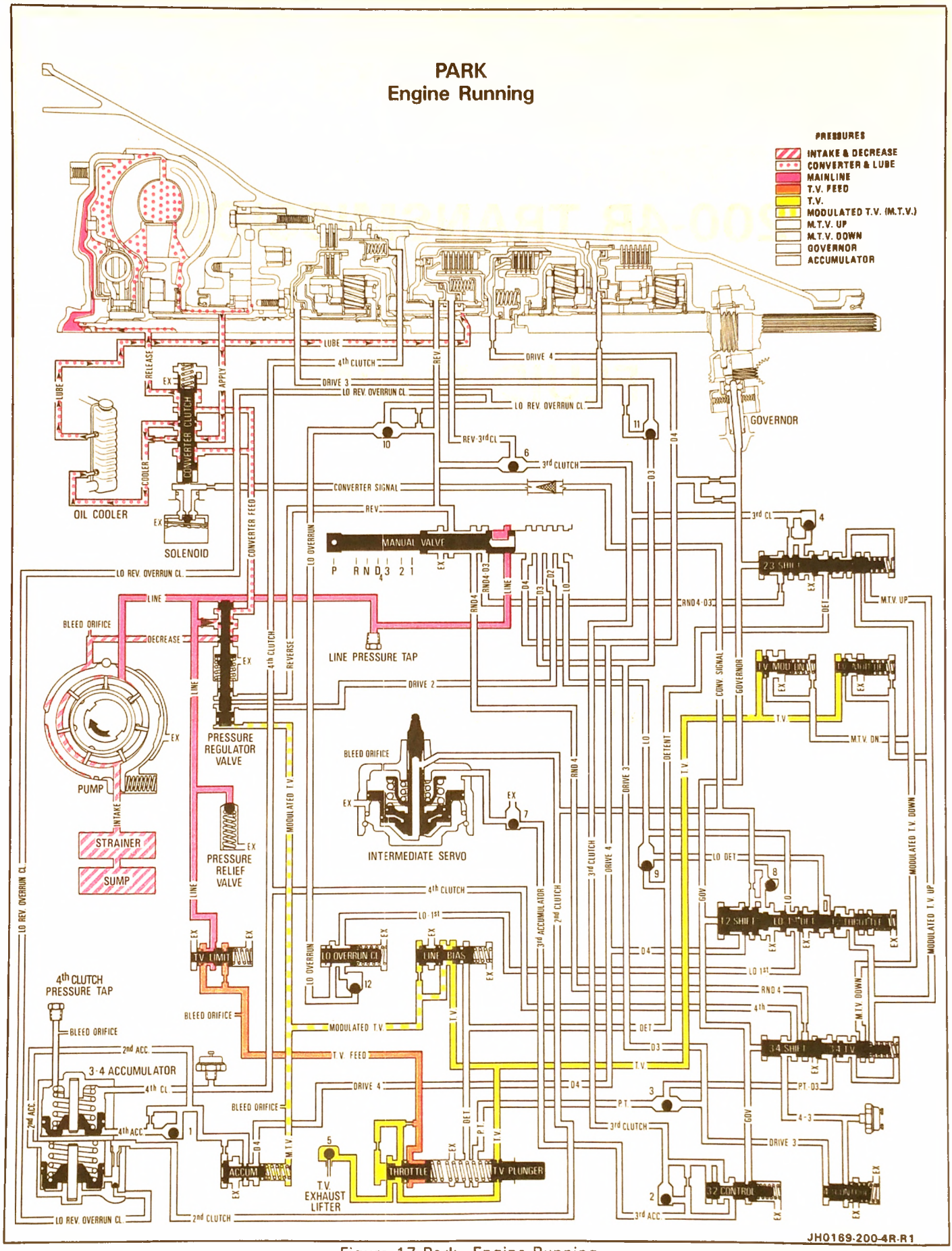

Figure 17 Park - Engine Running

PARK—ENGINE RUNNING

CONVERTER CLUTCH – RELEASED	OVERDRIVE ROLLER CLUTCH – HOLDING	FOURTH CLUTCH – RELEASED
OVERRUN CLUTCH – RELEASED	DIRECT CLUTCH – RELEASED	FORWARD CLUTCH – RELEASED
INTERMEDIATE BAND – RELEASED	LO ROLLER CLUTCH – NOT HOLDING	LO AND REVERSE CLUTCH – RELEASED

With the selector lever in the Park (P) position, oil from the pump is directed to the following:

1. Pressure Regulator Valve
2. Release Side of the Converter and the Lubrication System
3. Decrease Side of the Pump Slide
4. Manual Valve
5. T.V. System (Limit Valve, Throttle Valve, Line Bias Valve, M.T.V. Up Valve and M.T.V. Down Valve)
6. Pressure Relief Valve
7. Line Pressure Tap

Oil flows from the pump to the pressure regulator valve which regulates the pump pressure. When the pump output exceeds the demand of line pressure, oil from the pressure regulator valve is directed to the converter clutch apply valve. The converter clutch apply valve directs oil to the release side of the converter clutch. Converter return oil is directed to the transmission cooler by the converter clutch apply valve. Oil from the cooler is directed to the transmission lubrication system.

Oil is also directed from the pressure regulator valve to the pump slide to decrease pump output in relation to the combined pressure of M.T.V. oil and regulator valve spring force. Line pressure acts on the pressure relief valve which will exhaust any oil above 2,240 to 2,520 kPa (320 to 360 psi).

Line pressure at the manual valve is available for use in other drive ranges.

Line pressure at the T.V. limit valve is limited to 620 kPa (90 psi). This limited pressure is directed to the throttle valve where it is regulated to a variable pressure called throttle valve (T.V.) pressure. T.V. pressure increases with carburetor opening and is directed to the line bias, M.T.V. up and M.T.V. down valves.

At the line bias valve, T.V. pressure is modulated to M.T.V. pressure. M.T.V. pressure helps to control line pressure at the pressure regulator valve and accumulator pressure at the accumulator valve.

T.V. pressure at the M.T.V. up valve and M.T.V. down valve is available for use when accelerating in other ranges.

SUMMARY

The converter is filled from the release side; all clutches and the band are released. The manual linkage has the parking pawl engaged in the reaction internal gear lugs. At idle, there is not sufficient T.V. pressure to open the M.T.V. up or M.T.V. down valves.

JH0156-200-4R

Figure 17A

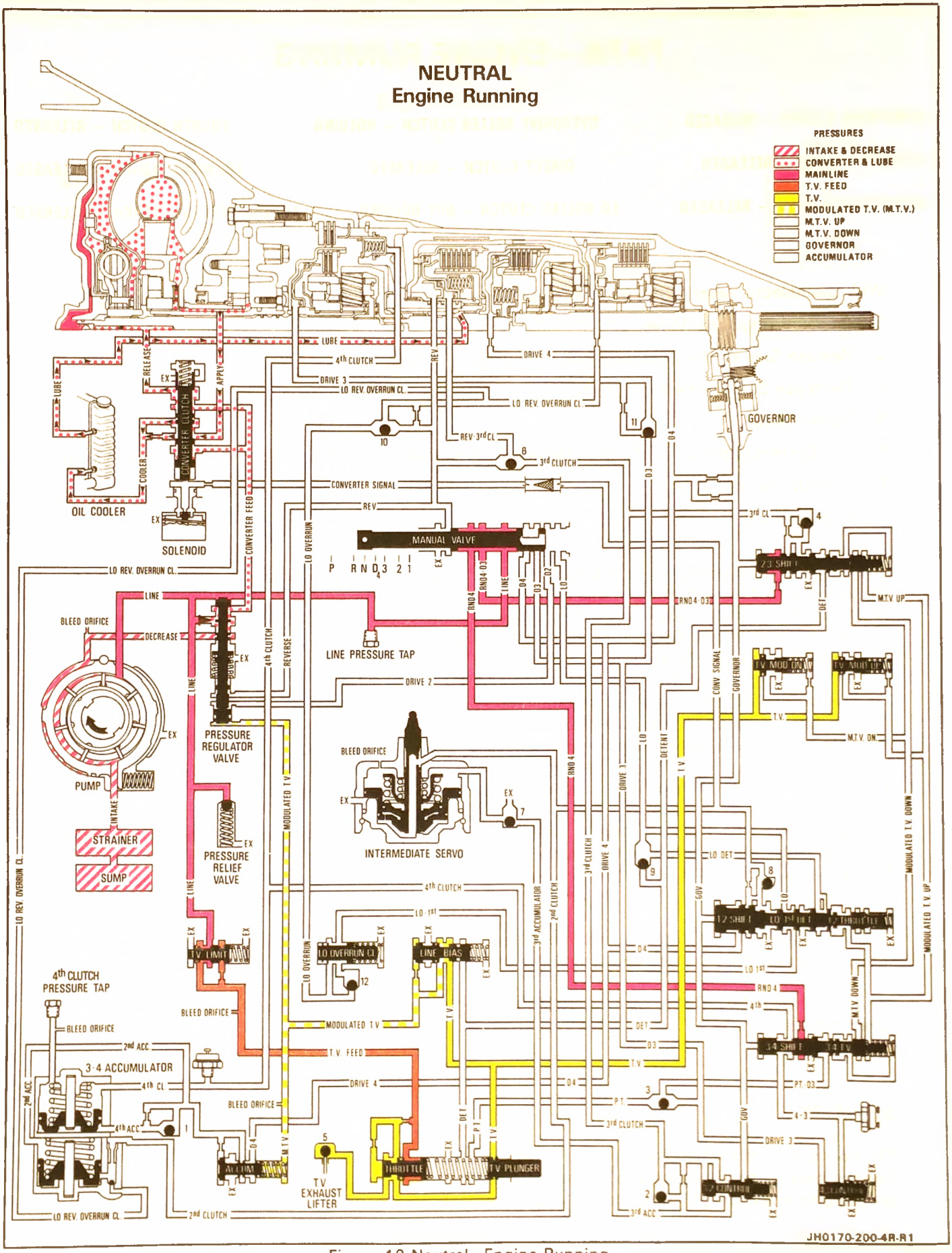

Figure 18 Neutral - Engine Running

NEUTRAL—ENGINE RUNNING

CONVERTER CLUTCH – RELEASED	OVERDRIVE ROLLER CLUTCH – HOLDING	FOURTH CLUTCH – RELEASED
OVERRUN CLUTCH – RELEASED	DIRECT CLUTCH – RELEASED	FORWARD CLUTCH – RELEASED
INTERMEDIATE BAND – RELEASED	LO ROLLER CLUTCH – NOT HOLDING	LO AND REVERSE CLUTCH – RELEASED

When the selector lever is moved to the Neutral (N) position, the manual valve is positioned to allow line pressure to enter two (2) passages as follows:

FIRST: Line pressure enters the Reverse, Neutral, Drive 4 (RND4) passage and is directed to a land on the 3-4 shift valve.

SECOND: Line pressure enters the Reverse, Neutral, Drive 4, Drive 3 (RND4D3) passage and is directed to a land on the 2-3 shift valve.

SUMMARY

The converter is filled; all the clutches, except the overdrive roller clutch, and the band are released; the transmission is in Neutral (N).

JH0157-200-4R

Figure 18A

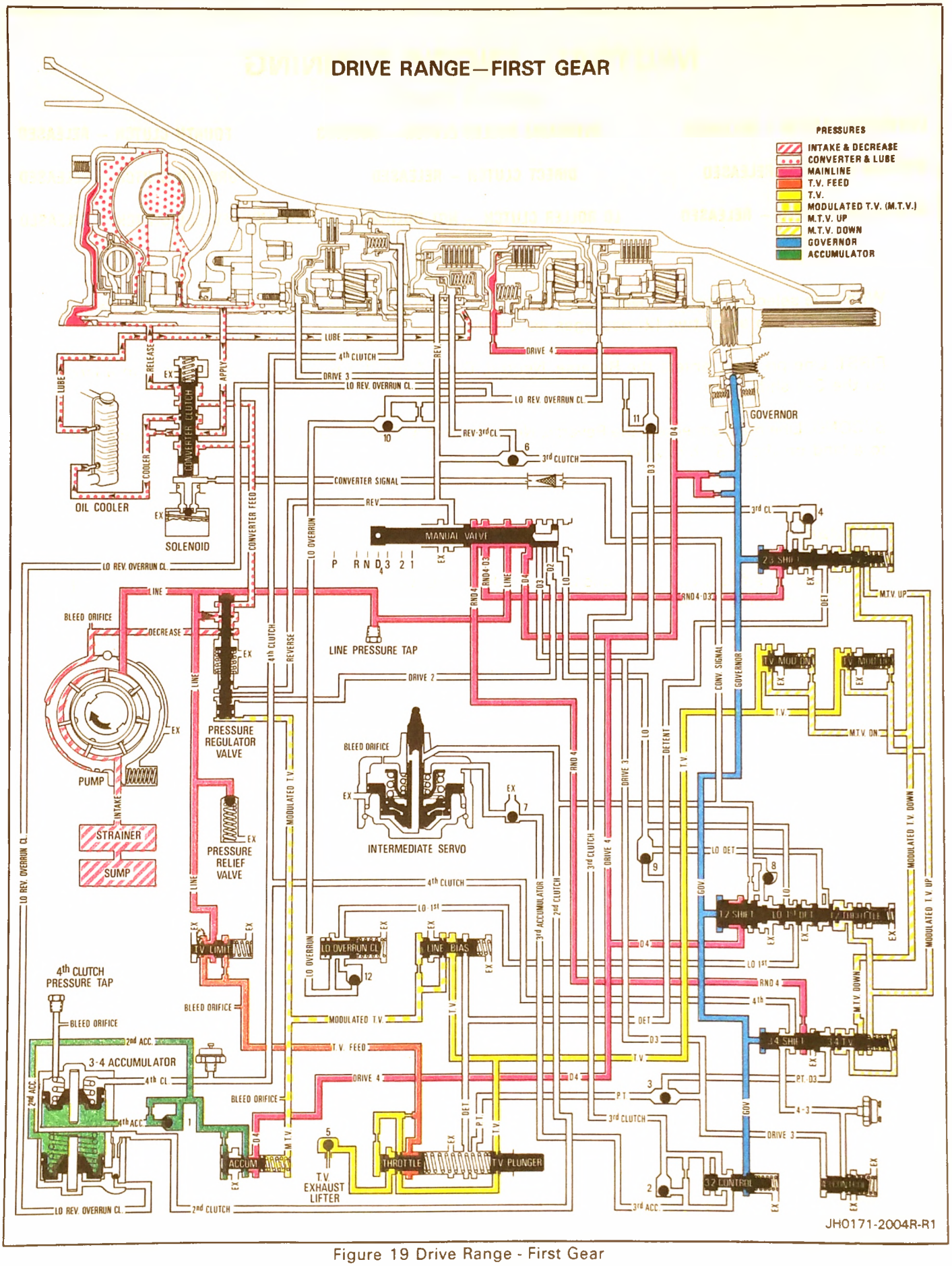

Figure 19 Drive Range - First Gear

D-4—FIRST GEAR

OVERDRIVE ROLLER CLUTCH – HOLDING **FORWARD CLUTCH – APPLIED** **LO ROLLER CLUTCH – HOLDING**

When the selector lever is moved to the Drive (D) position, the manual valve is repositioned to allow line pressure to enter the Drive 4 (D4) passage. Drive 4 oil then flows to the following:

1. Forward Clutch
2. Governor Assembly
3. 1-2 Shift Valve
4. Accumulator Valve

BASIC CONTROL

Drive 4 oil is directed to the forward clutch where it acts on the clutch piston to apply the forward clutch.

Drive 4 oil is directed to the 1-2 shift valve. Drive 4 oil is directed to the accumulator valve and is regulated to a pressure called accumulator pressure; this pressure is directed to the 1-2 and 3-4 accumulator pistons to act as a cushion for the band and fourth clutch apply.

Drive 4 oil is orificed into the governor passage, and is regulated to a variable pressure called governor pressure. Governor pressure increases with vehicle speed and acts against the 1-2, 2-3, 3-4, converter clutch shift valves, and the 3-2 control valve.

In first gear, there could be sufficient throttle valve plunger travel to increase T.V. pressure enough to open the M.T.V. up and the M.T.V. down valves. In first gear, M.T.V. up exerts pressure against governor pressure at the 1-2, 2-3, 3-4, and converter clutch throttle valves. M.T.V. down pressure is stopped by a land at each of the throttle valves.

SUMMARY

The converter clutch is released, the overdrive roller clutch is holding, the forward clutch is applied; the transmission is in Drive (D) Range — First Gear.

JH0158-200-4R

Figure 19A

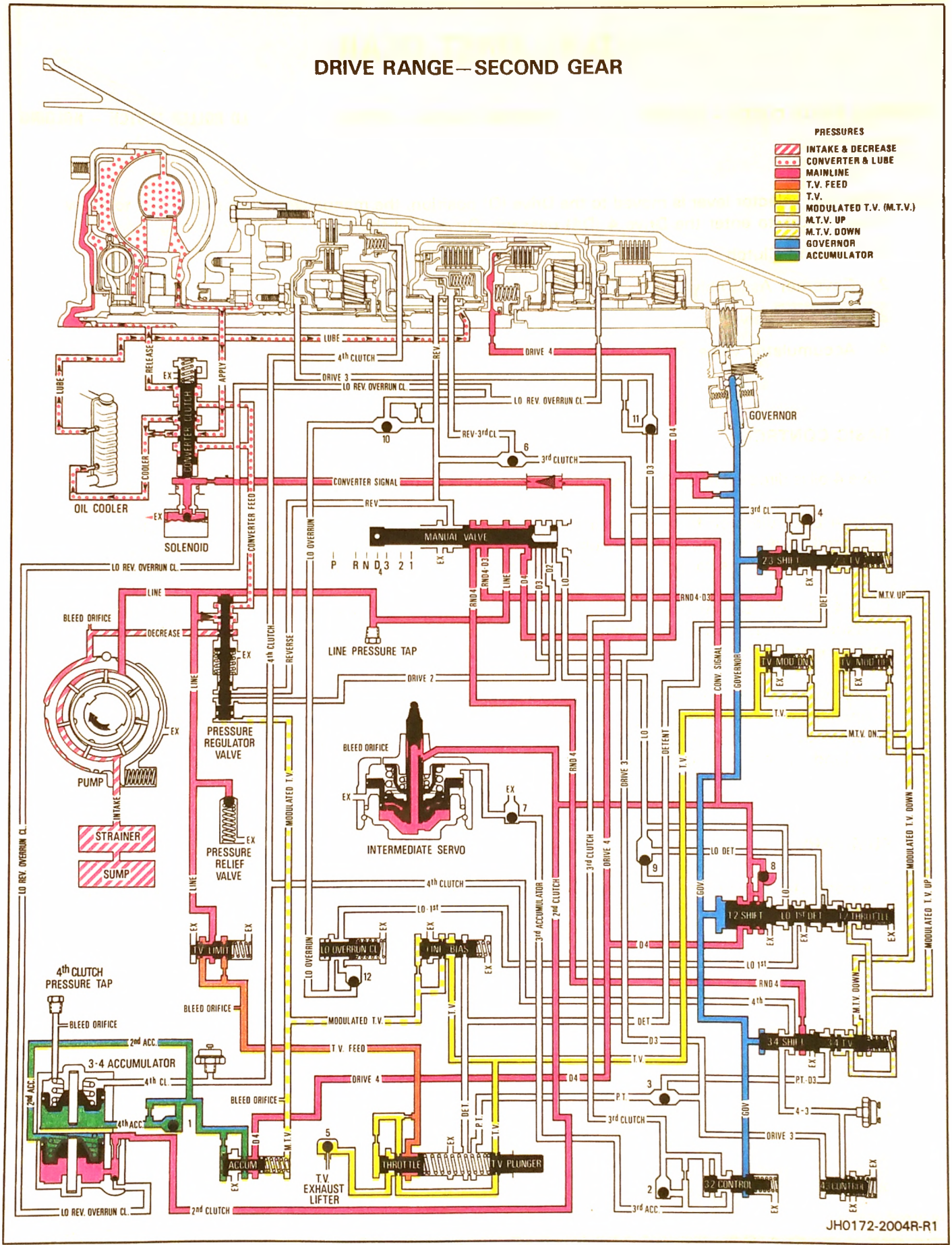

Figure 20 Drive Range - Second Gear

D-4—SECOND GEAR

CONVERTER CLUTCH – RELEASED

OVERDRIVE ROLLER CLUTCH – HOLDING

FORWARD CLUTCH – APPLIED

INTERMEDIATE BAND – APPLIED

As both vehicle speed and governor pressure increase, the force of the governor oil acting on the 1-2 shift valve overcomes the pressure of M.T.V. up oil and the force of the 1-2 throttle valve spring. This allows the 1-2 shift valve to open and Drive 4 (D4) oil to enter the second (2nd) oil passage. This oil is called second (2nd) oil. Second oil from the 1-2 shift valve is directed to the following:

1. 1-2 Shift Checkball (8)
2. Intermediate Servo
3. 1-2/Reverse Accumulator Piston
4. Converter Clutch Shift Valve

BASIC CONTROL

Second oil from the 1-2 shift valve will seat the 1-2 shift checkball forcing 2nd oil through an orifice. Second oil is then directed to the intermediate servo to apply the intermediate band. At the same time, 2nd oil seats the checkball in the 2nd/reverse accumulator passage and moves the 1-2 accumulator piston against accumulator pressure and the accumulator spring to maintain a controlled build-up of pressure on the intermediate servo during the 1-2 shift for a smooth band apply.

SUMMARY

The converter clutch is released, the overdrive roller clutch is holding, the forward clutch is applied, and the intermediate band is applied; the transmission is in Drive (D) Range — Second Gear.

JH0159-200-4R-R1

Figure 20A

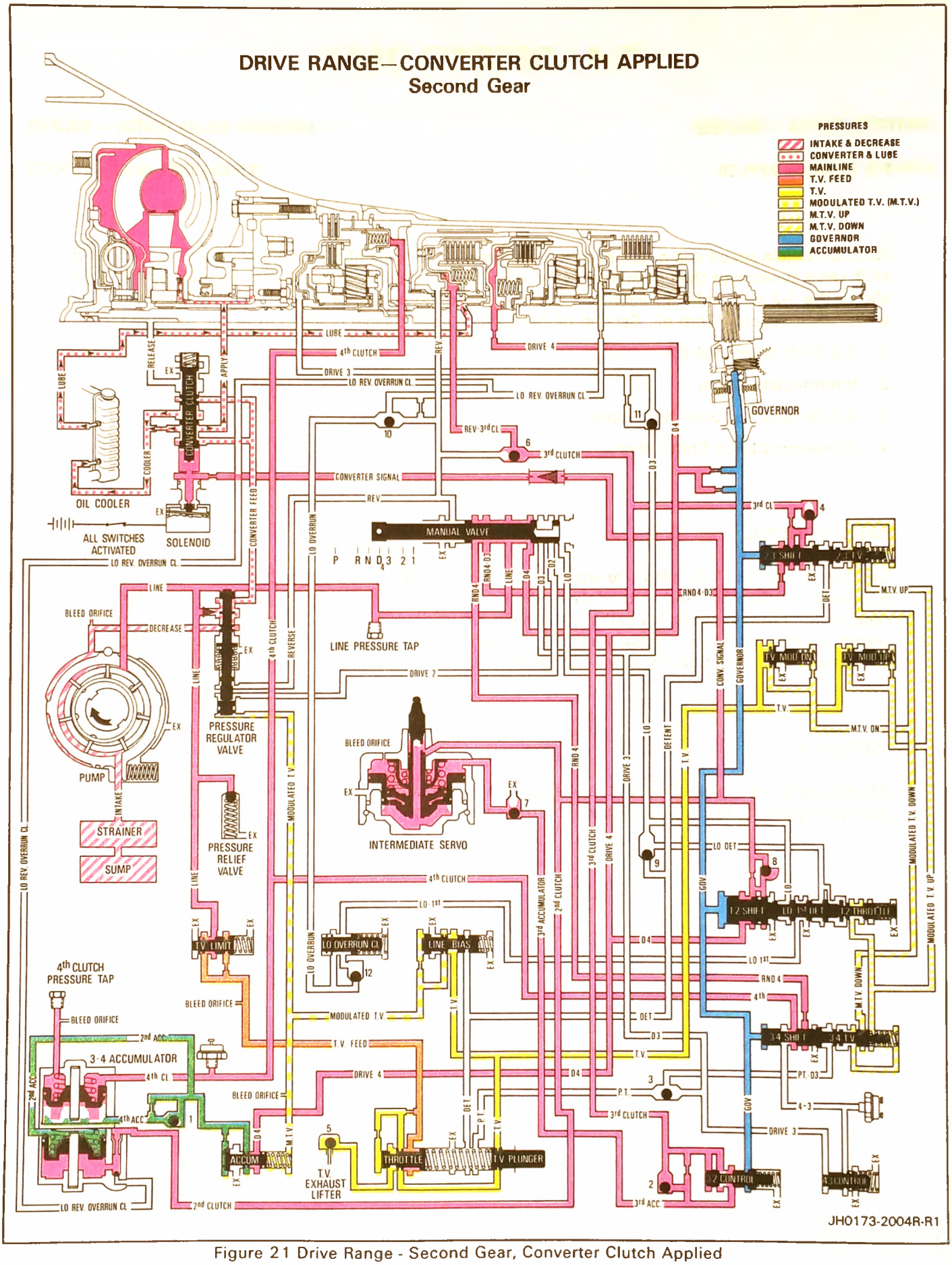

Figure 21 Drive Range - Second Gear, Converter Clutch Applied

D-4—SECOND GEAR

(Converter Clutch Applied)

CONVERTER CLUTCH – APPLIED

FORWARD CLUTCH – APPLIED

OVERDRIVE ROLLER CLUTCH – HOLDING

INTERMEDIATE BAND – APPLIED

As vehicle speed and governor pressure increase, the force of governor oil acting on the converter clutch shift valve overcomes the pressure of M.T.V. up oil and the force of the converter clutch T.V. spring. This allows the converter clutch shift valve to open and 2nd oil to enter the converter clutch signal passage. Providing the converter clutch solenoid is on, converter clutch signal oil will shift the converter clutch apply valve, and redirect converter feed oil into the apply passage. The apply oil flows between the stator shaft and converter hub to charge the converter with oil and push the converter pressure plate against the converter cover, causing a mechanical link between the engine and the turbine shaft. The rate of apply is controlled by the orifice check ball capsule in the end of the turbine shaft.

At the same time the converter clutch apply valve will direct converter feed oil through an orifice to the transmission cooler. Cooler oil is directed to the transmission lubrication system.

SUMMARY

The converter clutch is applied, the overdrive roller clutch is holding, the forward clutch is applied, and the intermediate band is applied; the transmission is in Drive (D) Range — Second Gear. The converter clutch is shown applied in Second Gear. In some models, the converter clutch shift valve will not shift until the transmission is in Third Gear.

JH0160-200-4R

Figure 21A

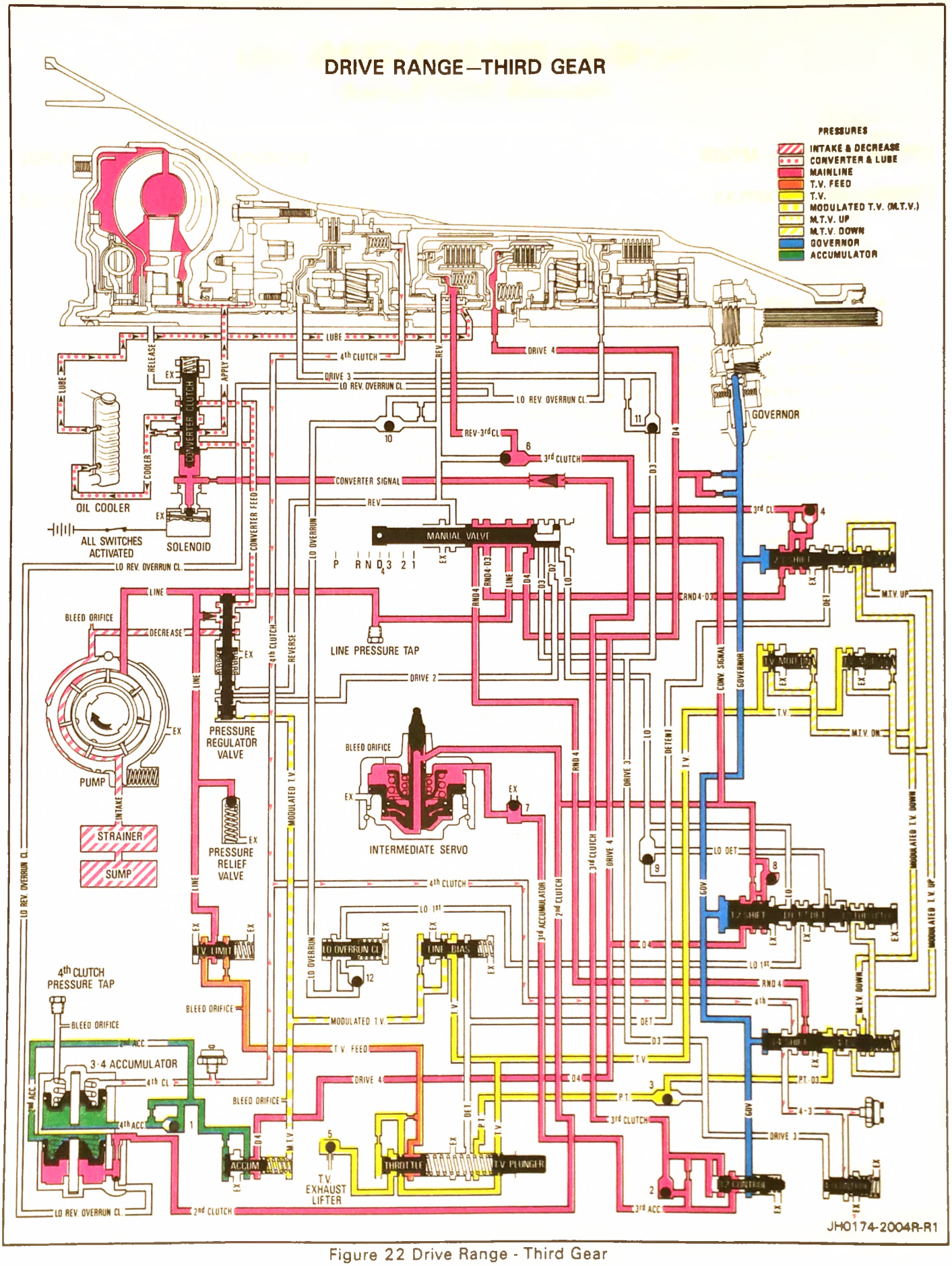

Figure 22 Drive Range - Third Gear

D-4—THIRD GEAR

CONVERTER CLUTCH – APPLIED*

OVERDRIVE ROLLER CLUTCH – HOLDING

DIRECT CLUTCH – APPLIED

FORWARD CLUTCH – APPLIED

As both vehicle speed and governor pressure increase, the force of governor oil acting on the 2-3 shift valve overcomes the force of the 2-3 T.V. spring and M.T.V. up oil. This allows the 2-3 shift valve to open and allows RND4D3 oil to enter the 3rd clutch passage.

Third clutch oil from the 2-3 shift valve is directed to the following:

1. 3-2 Exhaust Checkball (4)
2. Third Clutch and Reverse Checkball (6)
3. Inner Piston of Direct Clutch
4. Third Clutch Accumulator Checkball (2)
5. Third Accumulator Exhaust Checkball (7)
6. Intermediate Servo
7. 3-2 Control Valve

BASIC CONTROL

Third clutch oil from the 2-3 shift valve flows past the 3-2 exhaust checkball (4), to the 3rd/reverse checkball (6), seating it in the reverse passage. Third clutch oil then flows to the inner area of the direct clutch piston, applying the direct clutch. At the same time, third clutch oil is directed past the third clutch accumulator checkball (2), seats the third accumulator exhaust check ball (7), and then into the release side of the intermediate servo. This third clutch accumulator pressure combined with the servo cushion spring, moves the servo piston against second oil and acts as an accumulator for a smooth intermediate band release and direct clutch apply.

Third clutch oil flows through the 3-2 control valve to the third clutch accumulator passage.

SUMMARY

The converter clutch is applied*, the overdrive roller clutch is holding, the forward clutch is applied, the direct clutch is applied, and the intermediate band is released; the transmission is in Drive (D) Range — Third Gear (direct drive).

*The converter clutch may or may not be applied, depending on shift calibration and solenoid operation.

JH0161-200-4R

Figure 22A

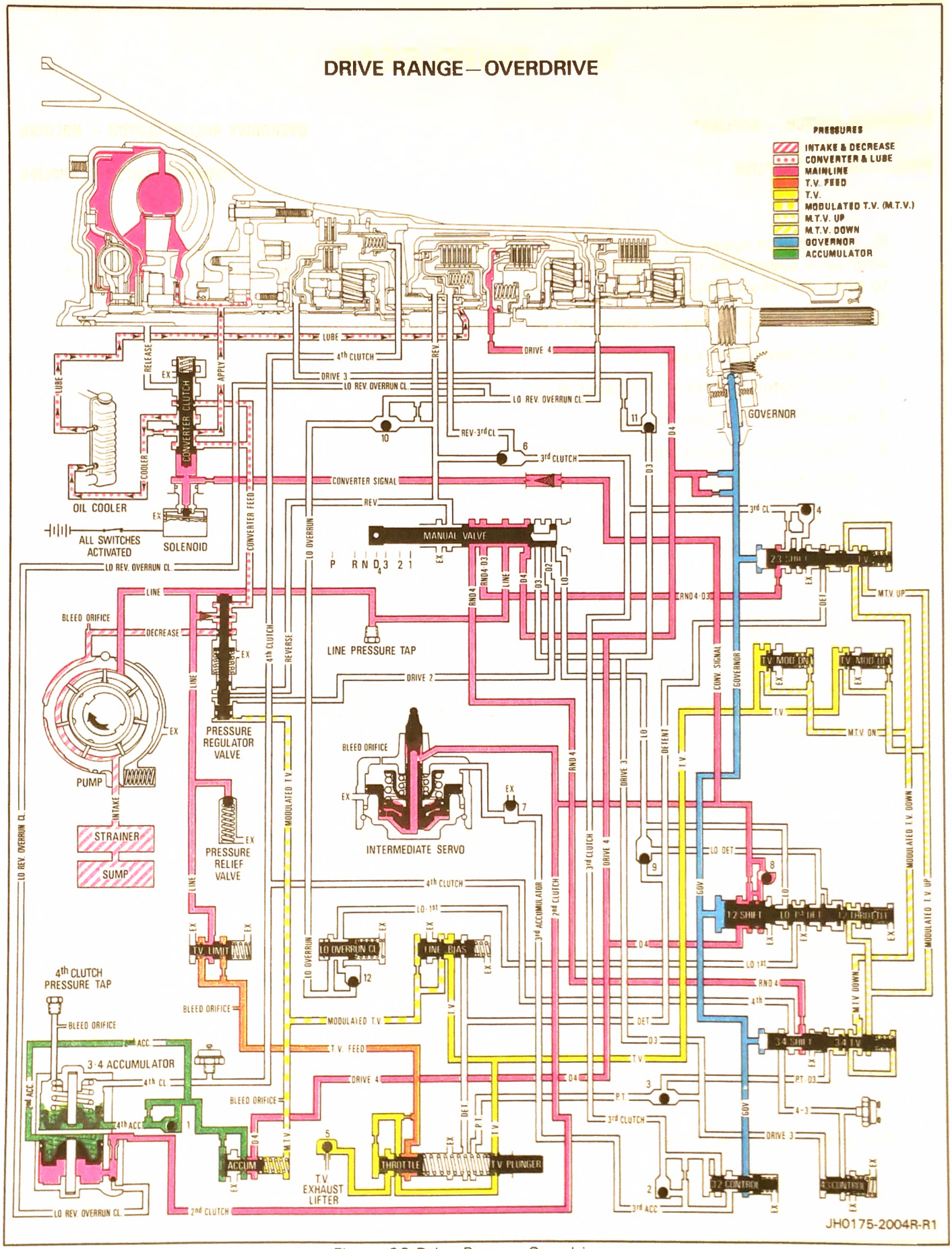

Figure 23 Drive Range - Overdrive

D-4—OVERDRIVE

CONVERTER CLUTCH – APPLIED

DIRECT CLUTCH – APPLIED

FOURTH CLUTCH – APPLIED

FORWARD CLUTCH – APPLIED

As both vehicle speed and governor pressure increase, the force of governor oil acting on the 3-4 shift valve overcomes the force of the 3-4 T.V. spring and M.T.V. up oil. This allows the 3-4 shift valve to open and RND4 oil enters the fourth clutch passage.

Fourth clutch oil from the 3-4 shift valve is directed to the following:

1. Fourth Clutch Apply Piston
2. 3-4 Accumulator Piston

BASIC CONTROL

Fourth oil from the 3-4 shift valve is directed to the fourth clutch piston to apply the fourth clutch. At the same time, fourth clutch oil moves the 3-4 accumulator piston against accumulator pressure and the accumulator spring to maintain a controlled build-up of pressure on the fourth clutch during the 3-4 shift, for a smooth 3-4 shift.

SUMMARY

The converter clutch*, fourth clutch, direct clutch, and forward clutch are applied; the transmission is in Drive (D) Range — Overdrive.

*The converter clutch may or may not be applied, depending on solenoid operation.

JH0162-200-4R

Figure 23A

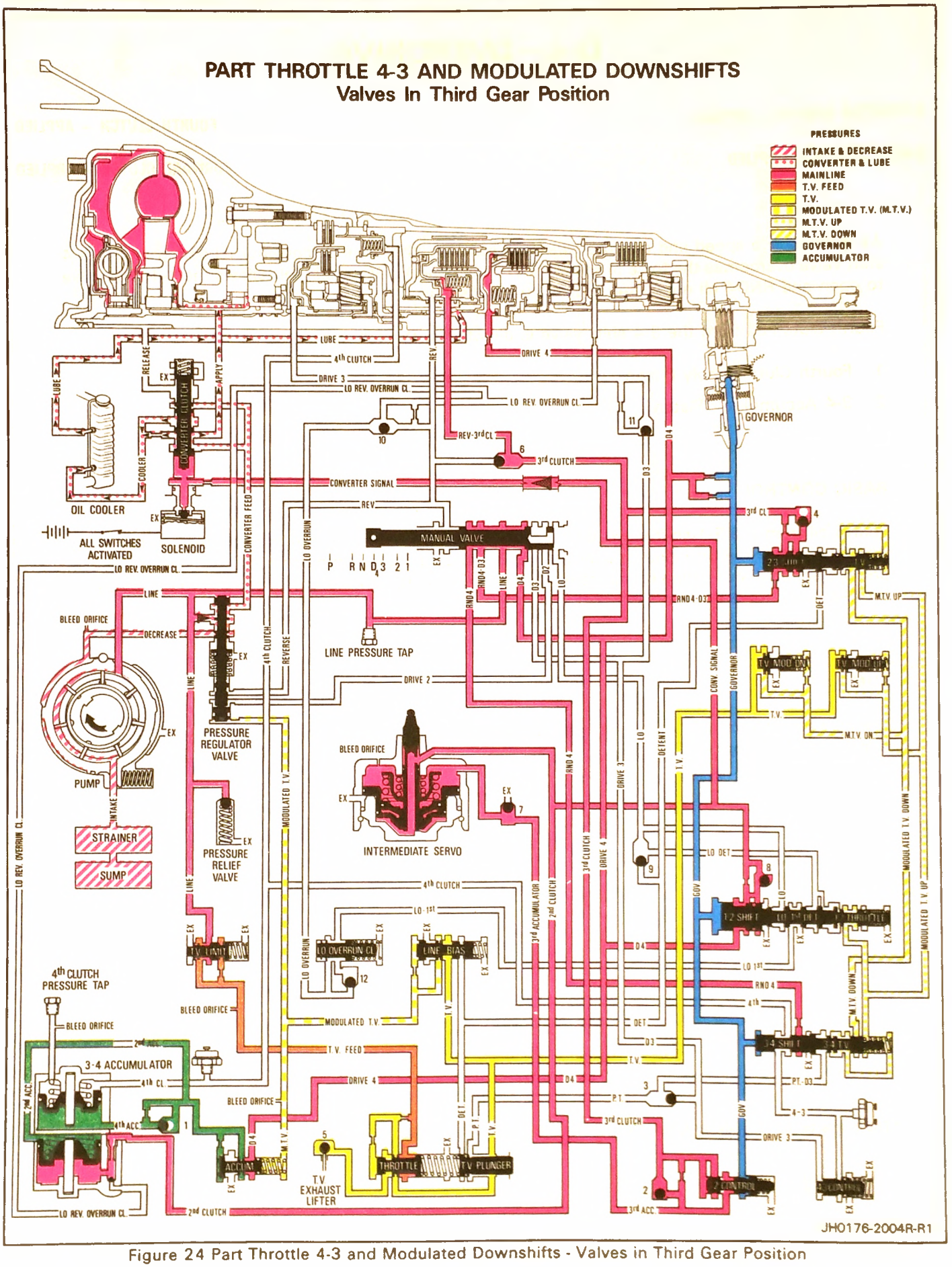

Figure 24 Part Throttle 4-3 and Modulated Downshifts - Valves in Third Gear Position

PART THROTTLE 4-3 AND MODULATED DOWNSHIFTS

(Valves In Third Gear Position)

CONVERTER CLUTCH – APPLIED*

OVERDRIVE ROLLER CLUTCH – HOLDING

DIRECT CLUTCH – APPLIED

FORWARD CLUTCH – APPLIED

A part throttle 4-3 downshift can be accomplished by depressing the accelerator pedal far enough to move the throttle valve (T.V.) plunger to allow the T.V. oil to enter the part throttle (P.T.) passage. This oil, called part throttle (P.T.) oil, is then routed to the 3-4 throttle valve.

Part throttle oil and the 3-4 spring force will close the 3-4 shift valve against governor oil, shutting off RND4 oil to the fourth clutch passage. Exhausting fourth clutch and fourth accumulator, oil will pass through the 3-4 shift valve to the 4-3 control valve, which controls the release of the 4th clutch for a smooth 4-3 shift.

A type of part throttle downshift can be accomplished in some ranges (4-3, 3-2, and converter clutch on-off) by depressing the accelerator pedal far enough to raise M.T.V. down pressure. This pressure when combined with the throttle valve spring pressure can overcome governor pressure and cause a modulated downshift.

Some models will have a different throttle valve bushing, which will block the P.T. passage until the detent passage is opened. These transmissions will have a detent 4-3 or 4-2 downshift. However, a modulated downshift is still possible due to the M.T.V. down valve.

*The converter clutch may or may not be applied depending on shift calibration and solenoid operation.

JH0163-200-4R

Figure 24A

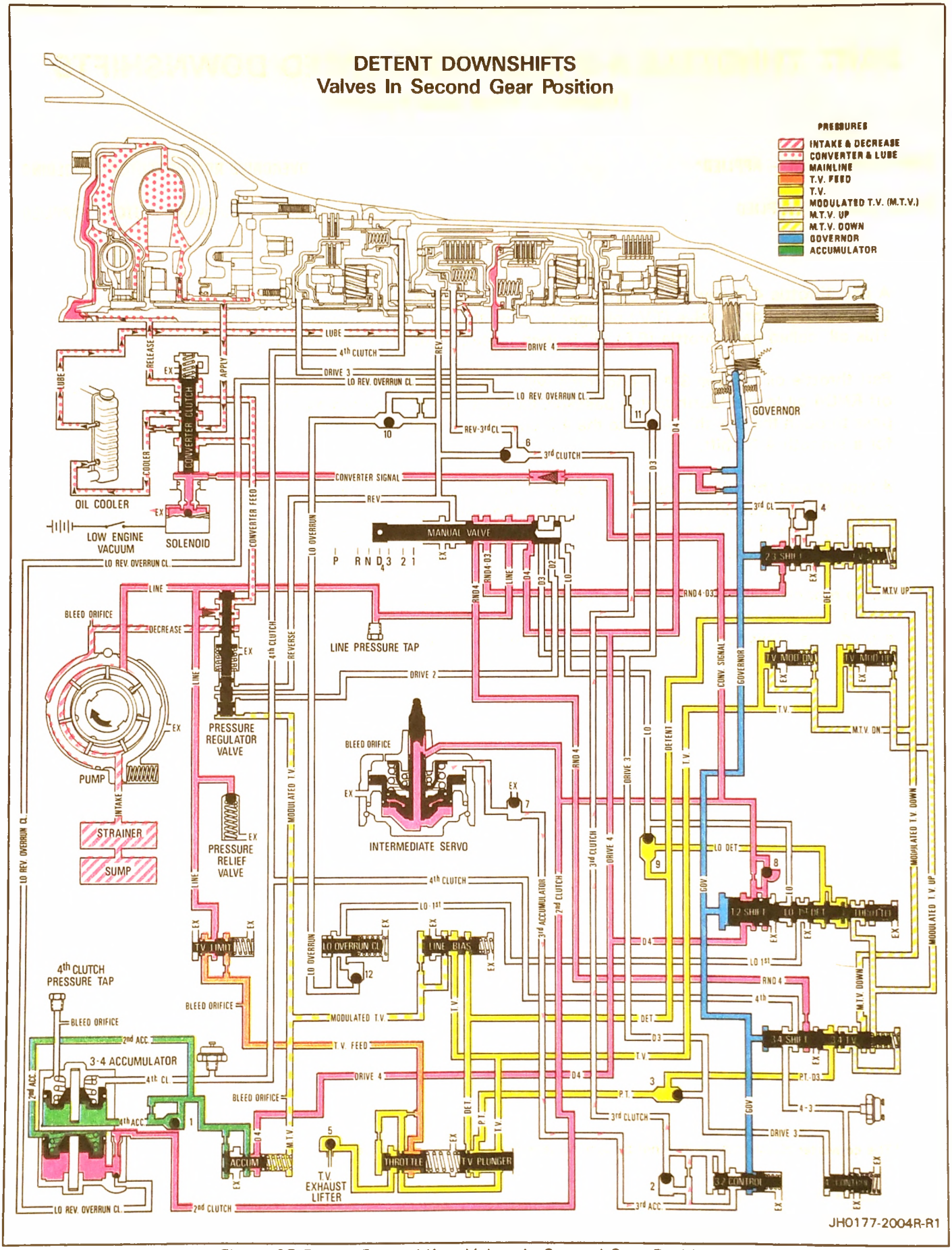

Figure 25 Detent Downshifts - Valves in Second Gear Position

DETENT DOWNSHIFT

(Valves In Second Gear Position)

CONVERTER CLUTCH – RELEASED*

FORWARD CLUTCH – APPLIED

OVERDRIVE ROLLER CLUTCH – HOLDING

INTERMEDIATE BAND – APPLIED

While operating at speeds below approximately 70 mph (112 km/h), a forced or detent 3-2 downshift is possible by depressing the accelerator pedal fully. This will position the throttle valve (T.V.) plunger to allow T.V. oil to enter the detent passage. This oil, called detent oil, is then routed to the following:

1. Line Bias Valve
2. 2-3 Throttle Valve
3. Lo and Detent Checkball (9)
4. 1-2 Throttle Valve

Detent oil from the T.V. plunger flows to the line bias valve to boost modulated T.V. (M.T.V.) pressure. M.T.V. oil acting on the T.V. boost valve will boost line pressure approximately 70 kPa (10 psi).

Detent oil from the T.V. plunger flows to the 2-3 throttle valve. Detent and M.T.V. down oil, acting on separate areas of the 2-3 throttle valve, will close the 2-3 shift valve against governor oil and allow 3rd clutch and 3rd accumulator oil to pass through an orifice and exhaust at the 2-3 shift valve.

At vehicle speeds above approximately 50 mph (80 km/h), governor oil acting on the 3-2 control valve will close it. Now the exhausting 3rd clutch accumulator oil from the intermediate servo will seat the 3rd clutch accumulator checkball (2) and flow through another orifice controlling the intermediate band apply for a smooth 3-2 shift at high speed.

A detent 2-1 downshift can be accomplished at speeds below approximately 30 mph (48 km/h), because detent oil pressure and the 1-2 spring force acting on the 1-2 throttle valve will close the 1-2 shift valve, shifting the transmission to First Gear.

Those model transmissions with no part throttle 4-3 downshift will have a detent 4-3 or 4-2, in addition to detent 3-2 and 2-1 downshifts.

*The converter clutch is shown being released by the solenoid. Due to a different calibration on each model, the converter clutch shift valve may also have closed.

JH0164-200-4R

Figure 25A

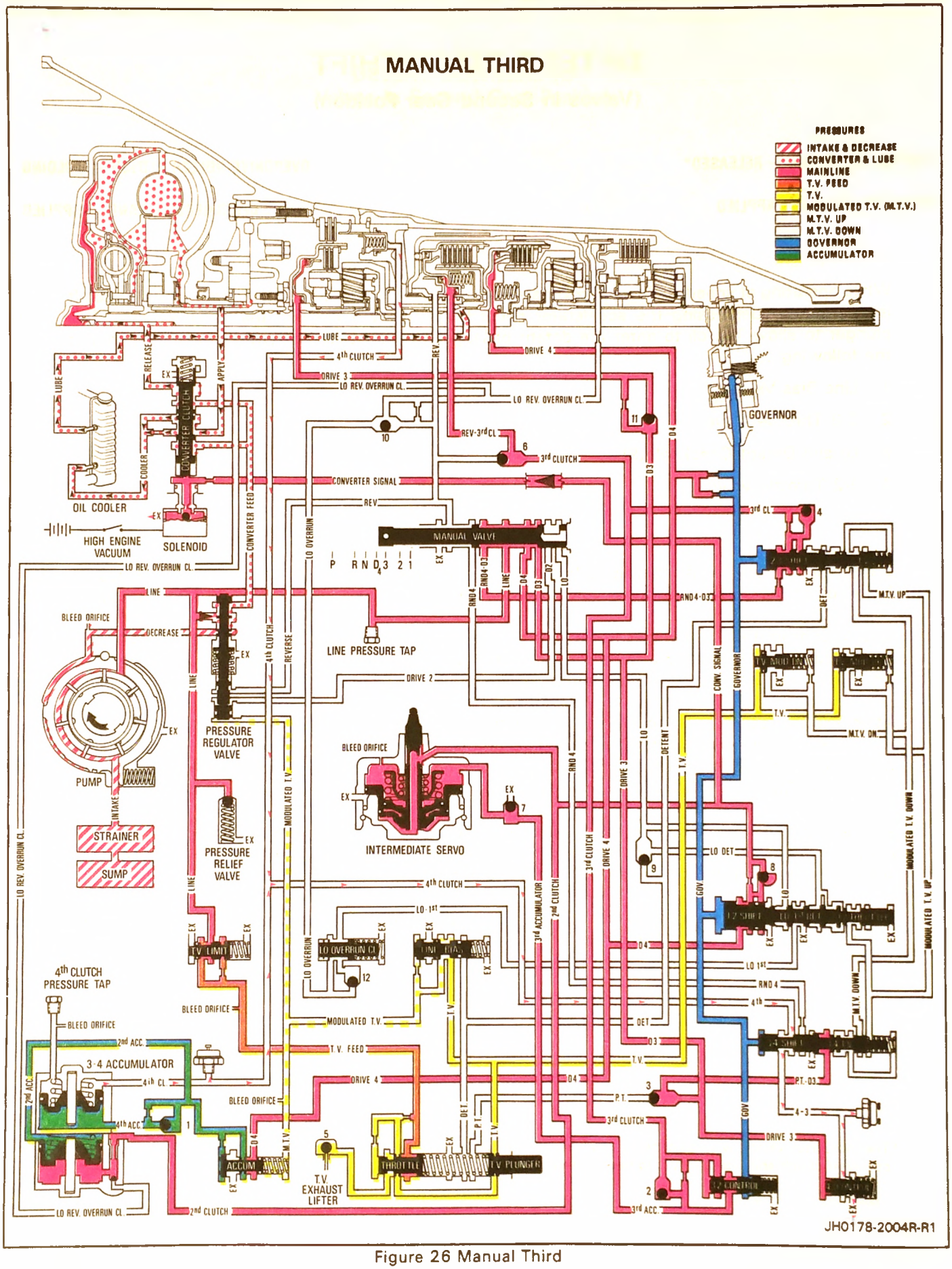

Figure 26 Manual Third

MANUAL THIRD

CONVERTER CLUTCH – RELEASED*

OVERRUN CLUTCH – APPLIED

FORWARD CLUTCH – APPLIED

DIRECT CLUTCH – APPLIED

A forced 4-3 downshift can be accomplished by moving the selector lever from Drive (D) Range to Third (3rd) Gear.

When the selector lever is moved to the Third (3rd) Gear position, line pressure is blocked from the RND4 passage, and D3 oil from the manual valve is directed to the following:

1. Overrun Clutch Checkball (11)
2. Overrun Clutch
3. 4-3 Control Valve
4. Part Throttle and Drive 3 (D3) Checkball (3)
5. 3-4 Shift Valve

D3 oil will open the 4-3 control valve and close the 3-4 shift valve to allow 4th clutch and 4th accumulator oil to pass back through the 3-4 shift valve and exhaust at the 4-3 control valve. D3 oil will also pass through an orifice and apply the overrun clutch to keep the overdrive roller clutch from overrunning when engine braking is needed.

SUMMARY

The forward and direct clutches are applied, the 4th clutch is released; the transmission is in manual 3rd, direct drive. The overrun clutch is applied to allow engine braking.

*In manual 3rd, the converter clutch is shown released by the engine vacuum switch and there is no M.T.V. up or M.T.V. down pressure. This is assuming the throttle is released. If the throttle is opened sufficiently, the converter clutch could engage and the M.T.V. up and M.T.V. down valves could open.

JH0165-200-4R

Figure 26A

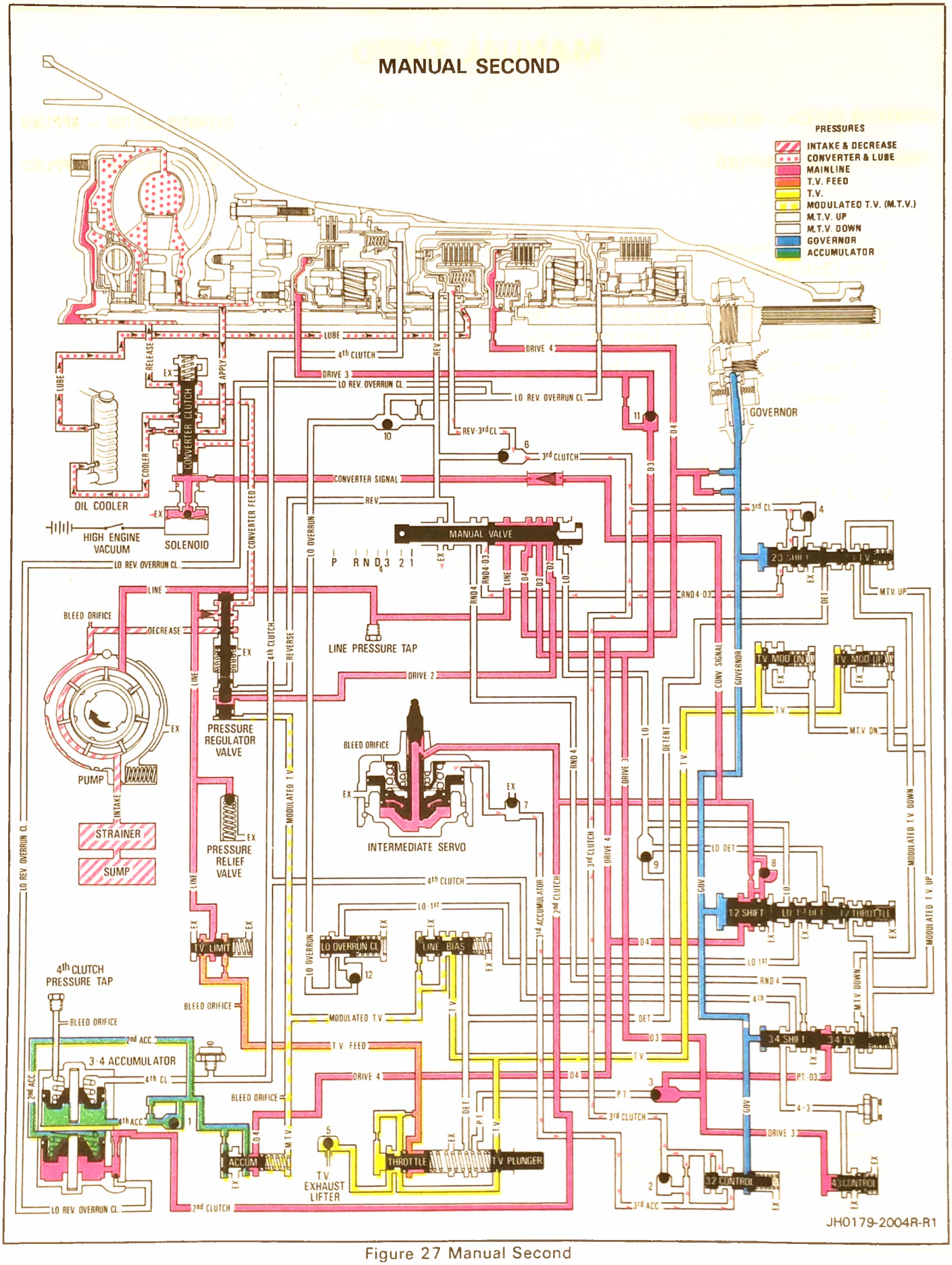

Figure 27 Manual Second

MANUAL SECOND

CONVERTER CLUTCH – RELEASED*

OVERRUN CLUTCH – APPLIED

FORWARD CLUTCH – APPLIED

INTERMEDIATE BAND – APPLIED

A forced 3-2 downshift can be accomplished by moving the selector lever from Third (3rd) Gear to Second (2nd) Gear position.

When the selector lever is moved to the Second (2nd) Gear position, RND4D3, 3rd clutch, and 3rd accumulator oil will exhaust at the manual valve. With no pressure to apply the 3rd clutch, or release the intermediate band, the transmission will shift to Second Gear.

The manual valve will also direct line pressure into the D2 passage. Drive 2 (D2) oil will act on the reverse boost valve to boost line pressure to 965 kPa (140 psi) which is required to prevent the intermediate band and forward clutch from slipping.

SUMMARY

The forward clutch and intermediate band are applied. The transmission is in Second Gear. Also, the overrun clutch is still applied to allow engine braking when needed.

*In manual 2nd, the converter clutch is shown released by the engine vacuum switch and there is no M.T.V. up or M.T.V. down pressure. This is assuming the throttle is released. If the throttle is opened sufficiently, the converter clutch could engage and the M.T.V. up and M.T.V. down valves could open.

JH0166-200-4R

Figure 27A

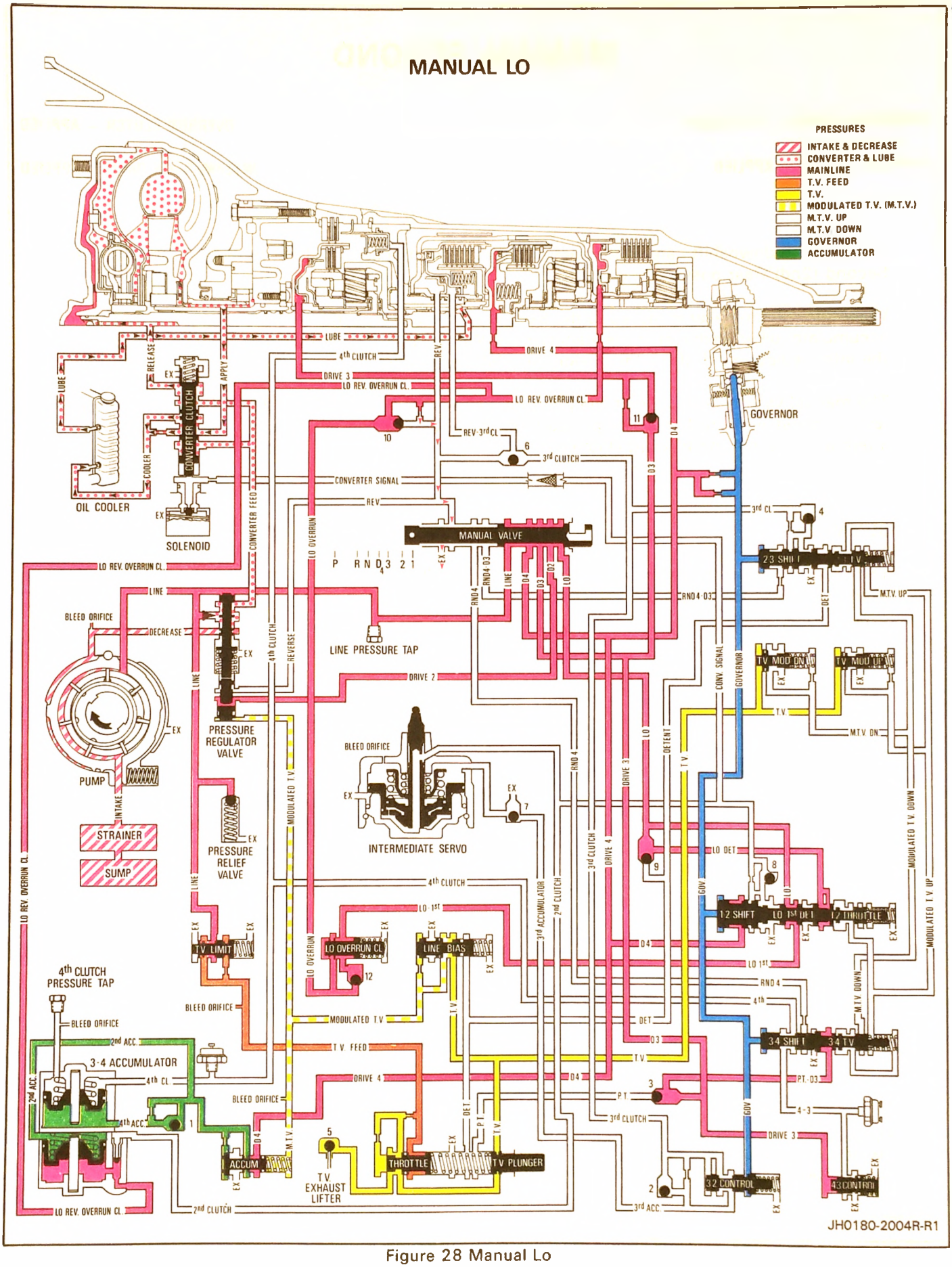

Figure 28 Manual Lo

MANUAL LO

CONVERTER CLUTCH – RELEASED

OVERRUN CLUTCH – APPLIED

FORWARD CLUTCH – APPLIED

LO AND REVERSE CLUTCH – APPLIED

Maximum downhill braking can be obtained at speeds below 30 mph (48 km/h), with the selector in Lo (1st) range. Lo (1st) oil pressure, which is 965 kPa (140 psi), is the same as second (2nd) oil pressure because second (D2) oil is still present.

Lo oil from the manual valve is directed to the following:

1. Lo and Detent Checkball (9)
2. 1-2 Shift Valve Train (Lo 1st/Detent Valve)
3. Lo and Reverse Checkball (10)
4. Lo and Reverse Overrun Clutch

Lo oil at the lo 1st/detent valve combined with M.T.V. down and 1-2 throttle valve spring force will close the 1-2 shift valve at speeds below approximately 30 mph (48 km/h). This allows 2nd oil to exhaust, releasing the intermediate band, and lo oil to travel to the lo overrun clutch valve. The lo overrun clutch valve regulates lo oil pressure down to approximately 205 kPa (30 psi) and then directs this regulated oil to the lo/reverse overrun clutch and applies it.

SUMMARY

The forward clutch is applied. The lo and reverse, and the overrun clutch are applied to allow engine braking. The intermediate band is released, the transmission is in Lo Range — First Gear.

JH0167-200-4R

Figure 28A

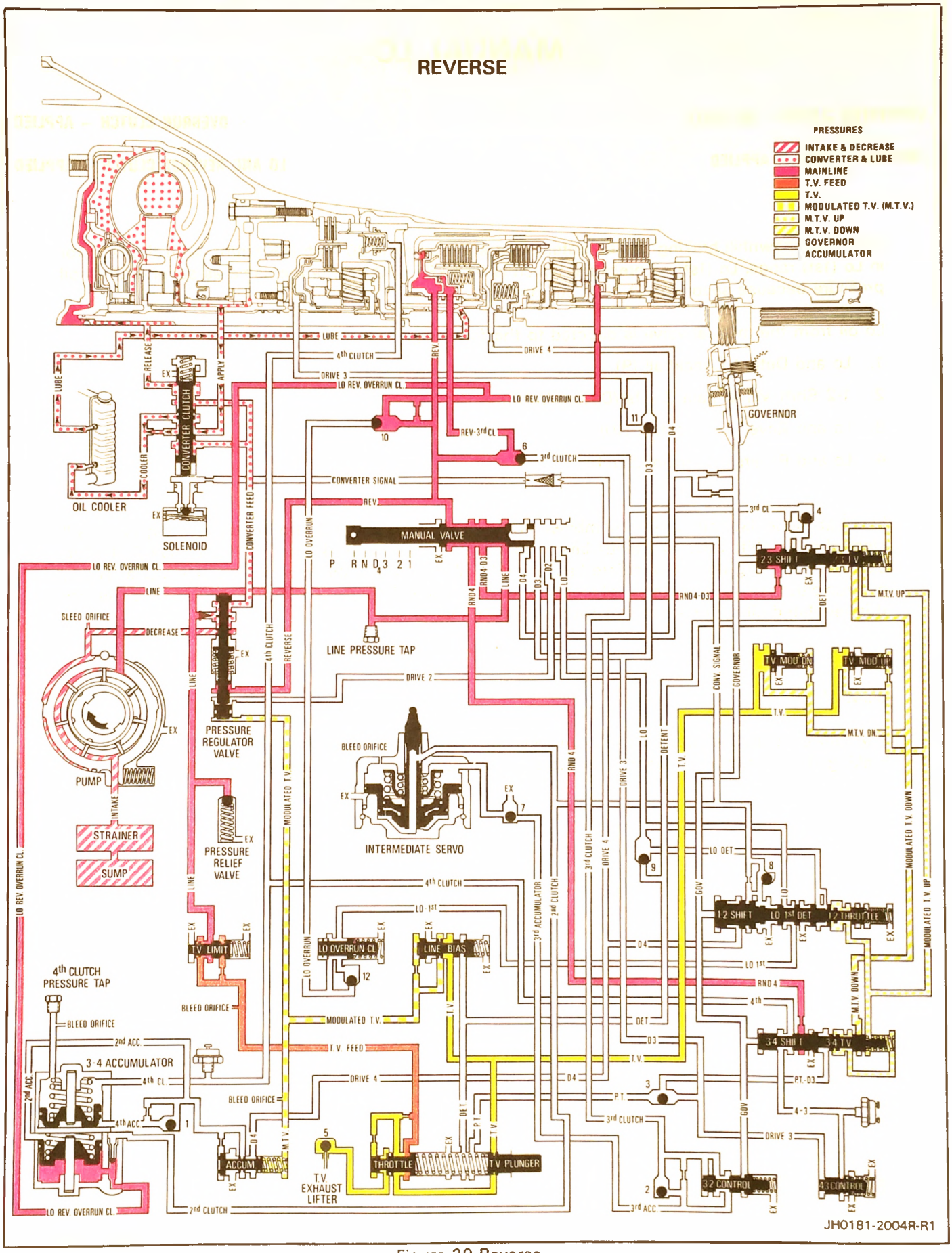

Figure 29 Reverse

REVERSE

OVERDRIVE ROLLER CLUTCH – HOLDING **DIRECT CLUTCH – APPLIED** **LO AND REVERSE CLUTCH – APPLIED**

When the selector lever is moved to the Reverse (R) position, the manual valve is repositioned to allow line pressure to enter the reverse passage which directs oil to the following:

1. Lo and Reverse Checkball (10)
2. Lo and Reverse Overrun Clutch
3. Third Clutch and Reverse Checkball (6)
4. Inner Area of Direct Clutch
5. Outer Area of Direct Clutch
6. 1-2/Reverse Accumulator

Reverse oil seats the lo/reverse checkball (10) in the lo overrun clutch passage and flows to the lo/reverse overrun clutch piston, applying the lo/reverse overrun clutch. Reverse oil also seats the 3rd/reverse checkball (6) in the 3rd clutch passage and flows to the inner area of the direct clutch piston. In addition, reverse oil is directed to the outer area of the direct clutch piston thus both the inner and the outer areas of the direct clutch piston combine to apply the direct clutch.

At the same time, the reverse oil seats the check ball in the 2nd/reverse accumulator passage and moves the 1-2/reverse accumulator piston against spring pressure to maintain a controlled buildup of pressure on the lo/reverse overrun clutch and direct clutch during the P/N-Reverse shift for a smooth clutch apply.

Reverse oil acting on the reverse boost valve in the pressure regulator will boost line pressure to approximately 725 kPa (105 psi). M.T.V. oil from the line bias valve acting on the T.V. boost valve, in the pressure regulator, will further boost line pressure from 725 kPa (105 psi) at idle to 1725 kPa (250 psi) at full throttle.

SUMMARY

The overdrive roller clutch is holding, the direct clutch is applied, and the lo and reverse clutch is applied; the transmission is in Reverse (R).

JH0168-200-4R-R1

Figure 29A

1989
MODELS KJF, KTF

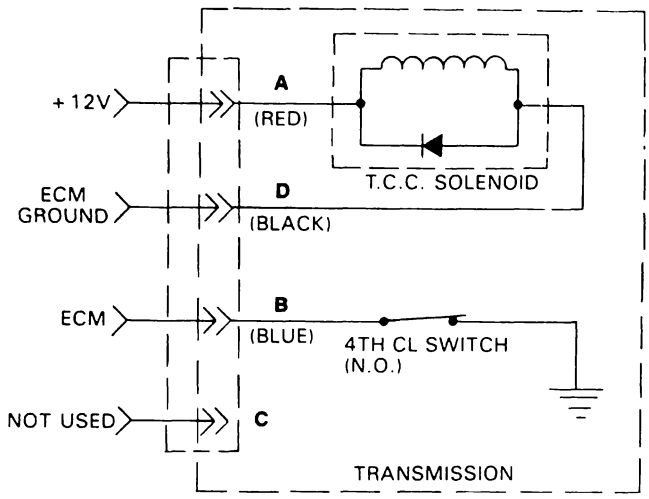

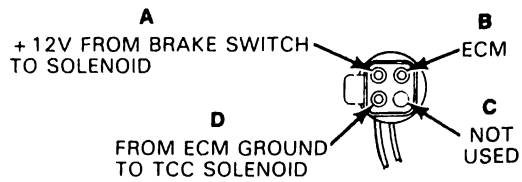

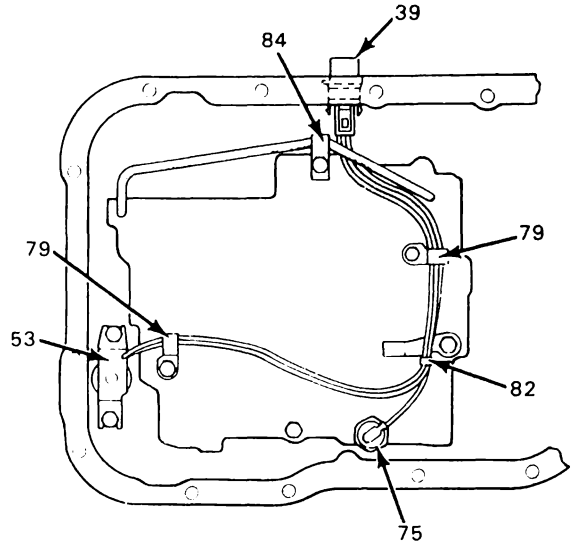

1989
MODELS CTF, CUF

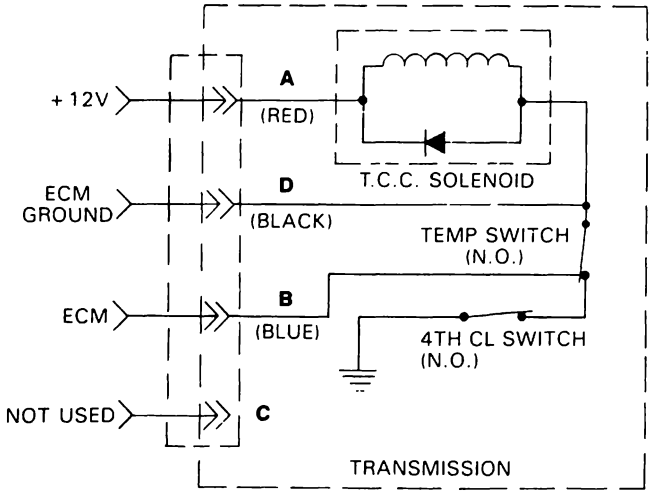

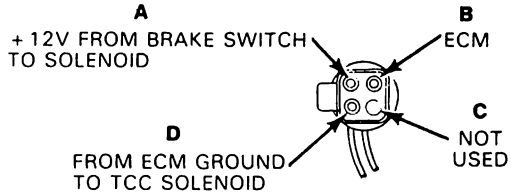

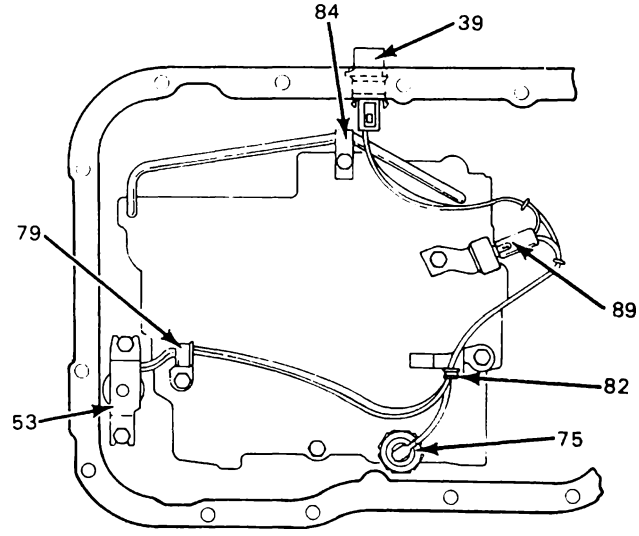

ILL. NO.	DESCRIPTION
39	CONNECTOR, ELECTRICAL
53	SOLENOID ASSEMBLY
75	SWITCH, PRESSURE (4TH)
79	CLIP, SOLENOID WIRE (2)
82	CLIP, FILTER RETAINER
84	RETAINER, SIGNAL OIL PIPE
89	SWITCH, TEMPERATURE

HH0017-2004R-R5

Figure 30 Wiring Diagrams

ILL. NO.	DESCRIPTION
1	CONVERTER CL. SIGNAL
2	OVERRUN CLUTCH
3	VENT
4	DRAIN
5	LO
6	MTV
7	VOID
8	REVERSE
9	LINE
10	CONVERTER FEED
11	EXHAUST
12	RELEASE
13	TO COOLER

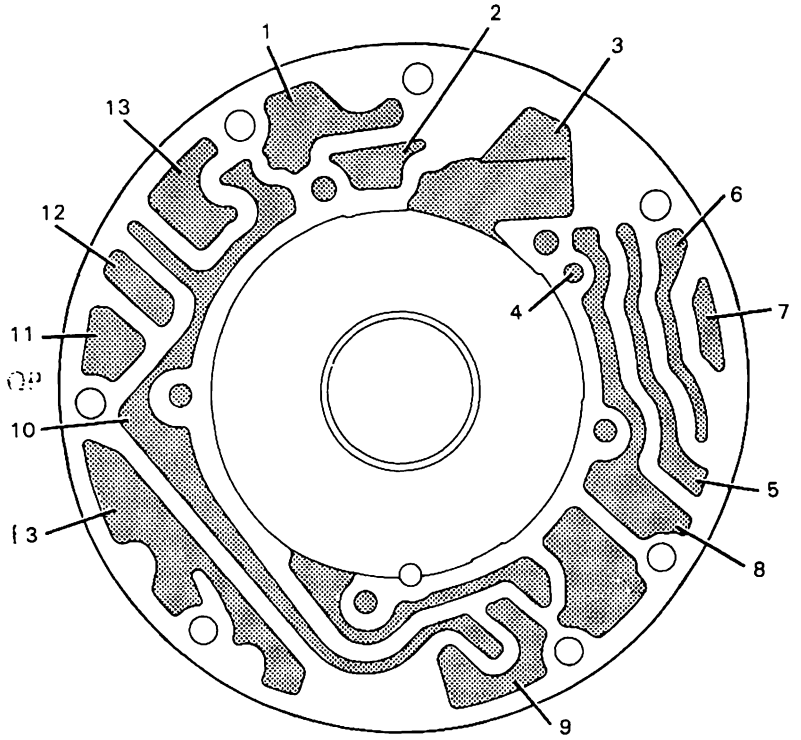

HH0018-200-4R

Figure 31 Pump Body

ILL. NO.	DESCRIPTION
1	CONVERTER CL. SIGNAL
2	OVERRUN CLUTCH
3	VENT
4	DECREASE
5	LO
6	MTV
7	REVERSE
8	LINE
9	CONVERTER FEED
10	EXHAUST
11	RELEASE
12	TO COOLER

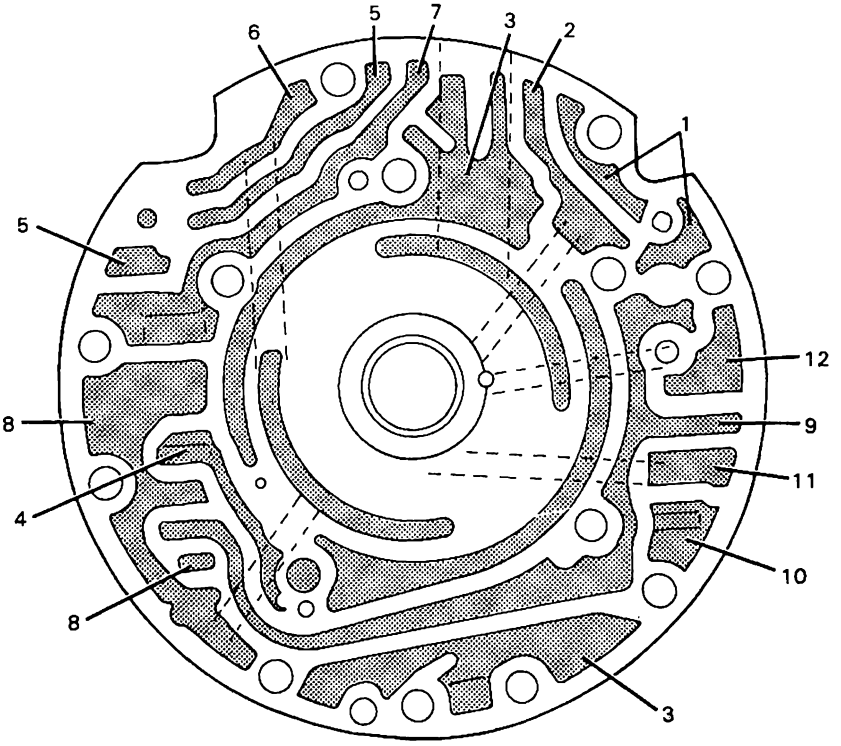

HH0019-200-4R

Figure 32 Pump Cover

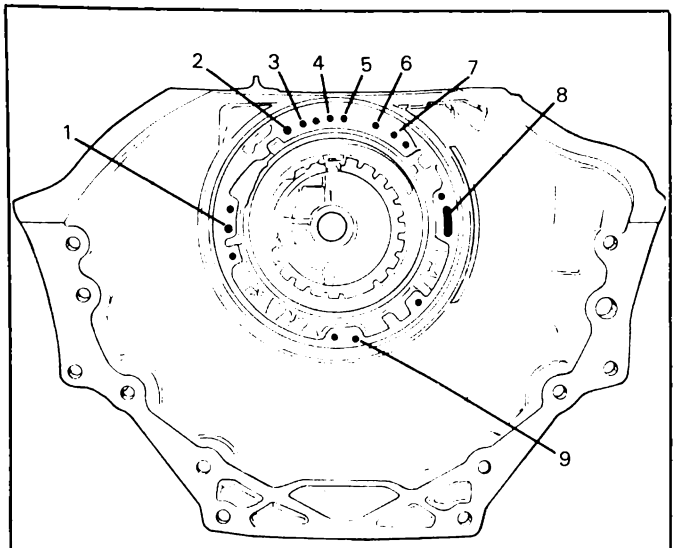

ILL. NO.	DESCRIPTION
1	LINE PRESSURE TAP
2	LINE
3	MODULATOR THROTTLE VALVE
4	DRIVE 2
5	REVERSE
6	DRIVE 3
7	CONVERTER CL. SIGNAL
8	TO COOLER
9	CASE VENT

HH0024-200-4R

Figure 33 Pump Assembly to Case Passages

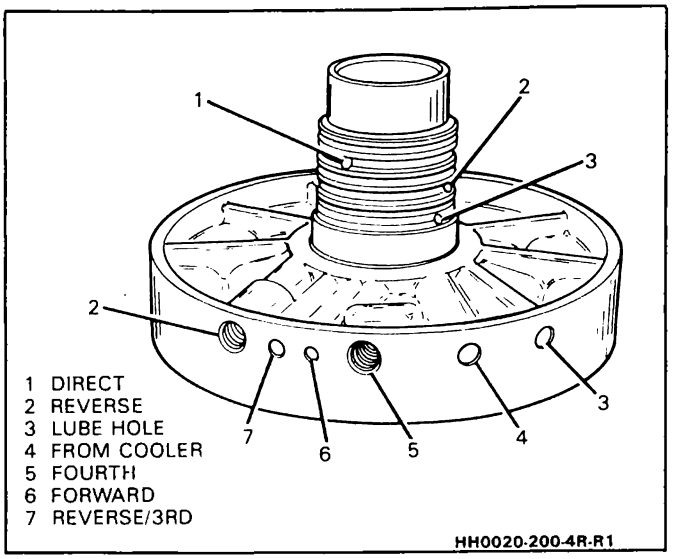

Figure 34 Center Support Passages

1 EXHAUST
2 LINE
3 REVERSE
4 RND4D3
5 3RD CLUTCH
6 REVERSE/3RD
7 3RD ACCUMULATOR
8 DRIVE 2
9 GOVERNOR
10 RND4
11 LO/DETENT
12 DRIVE 4
13 DRIVE 3
14 REVERSE OR LO OVERRUN
15 VOID
16 4TH CLUTCH
17 4TH ACCUMULATOR
18 LO OVERRUN
19 2ND CLUTCH
20 LO-1ST
21 LO
22 SERVO EXHAUST
23 THROTTLE VALVE
24 PART THROTTLE/D3
25 TV FEED
26 TV EXHAUST
27 MTV DOWN
28 MOD. THROTTLE VALVE
29 CONVERTER CL. SIGNAL
30 MTV UP
31 CUP PLUG

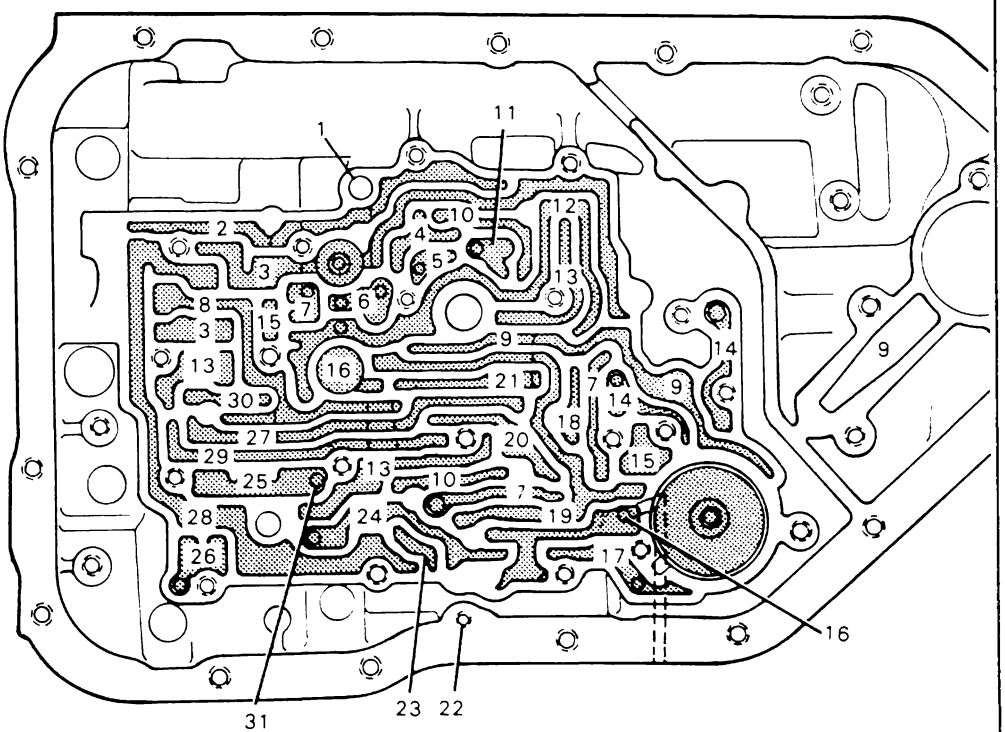

Figure 35 Case Passages - Valve Body Side

1 LO
2 DRIVE 2
3 DRIVE 3
4 DRIVE 4
5 LINE
6 RND4D3
7 RND4
8 3RD CLUTCH
9 REVERSE
10 EXHAUST
11 GOVERNOR
12 3RD ACCUMULATOR
13 ORIFICED MODULATED TV
14 THROTTLE VALVE
15 DETENT
16 MTV UP
17 MTV DOWN
18 ORIFICED MTV UP
19 ORIFICED MTV DOWN
20 2ND CLUTCH
21 4-3
22 PART THROTTLE
23 TV FEED
24 MODULATED TV
25 LO-1ST
26 ORIFICED TV
27 4TH CLUTCH
28 LO OR DETENT
29 PART THROTTLE/D3
30 VOID
31 ACCUMULATOR
32 4TH ACCUMULATOR
33 LO OVERRUN
34 CONVERTER CL. SIGNAL

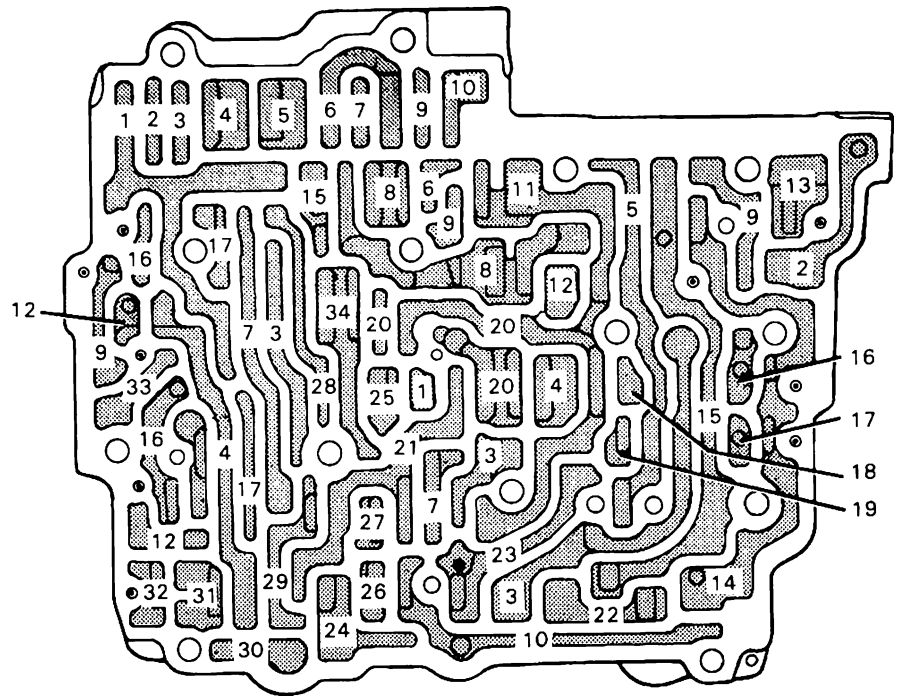

Figure 36 Valve Body Passages - Case Side

ILL. NO.	DESCRIPTION
1	ORI MTV
2	REVERSE
3	MTV
4	DRIVE 2
5	3RD ACC.
6	LINE
7	EXHAUST
8	RND4D3
9	RND4
10	DETENT
11	DRIVE 4
12	DRIVE 3
13	LO/DETENT
14	3RD CLUTCH
15	MTV UP
16	MTV DOWN
17	ORI MTV DOWN
18	ORIFICE
19	GOVERNOR
20	2ND CLUTCH
21	4TH CLUTCH
22	LO
23	LO-1ST
24	GOV. ORIFICE
25	LO OV
26	REV/LO OV
27	CONV. CL. SIGNAL
28	RND4 ORI
29	TV FEED
30	PART THROTTLE
31	PT/D3
32	ACCUMULATOR
33	TV

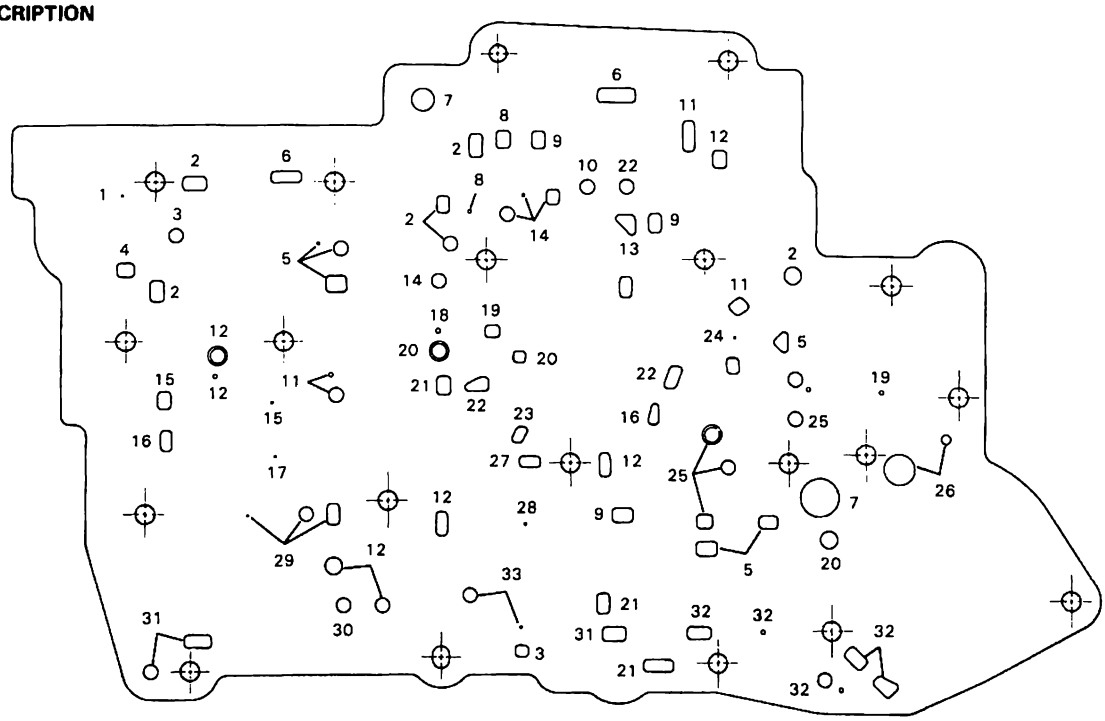

Figure 37 Typical Spacer Plate

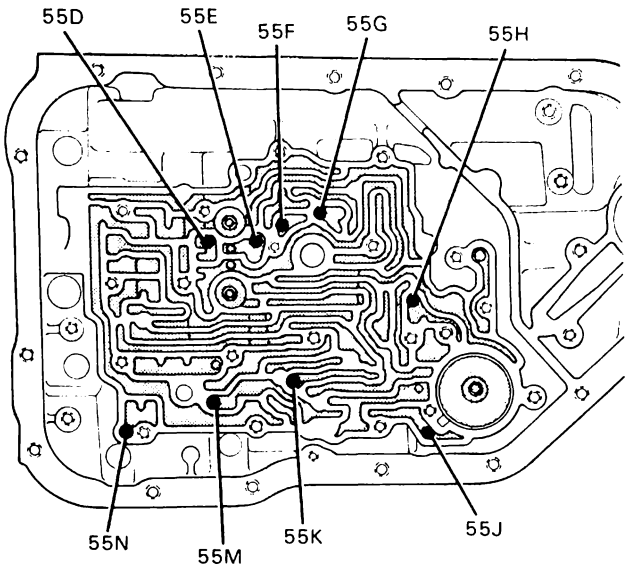

ILL. NO.	DESCRIPTION
55D	CHECK BALL #2 3RD ACCUMULATOR
55E	CHECK BALL #6 REVERSE/3RD
55F	CHECK BALL #4 3RD CLUTCH
55G	CHECK BALL #9 LO/DETENT
55H	CHECK BALL #10 LO/REVERSE
55J	CHECK BALL #1 4TH ACCUMULATOR
55K	CHECK BALL #7 INTERMEDIATE SERVO CHECK BALL IS LOCATED IN CAPSULE
55M	CHECK BALL #3 PT/D3
55N	CHECK BALL #5 T.V. EXHAUST

HH0015-200-4R

Figure 38 Check Ball Location - Case

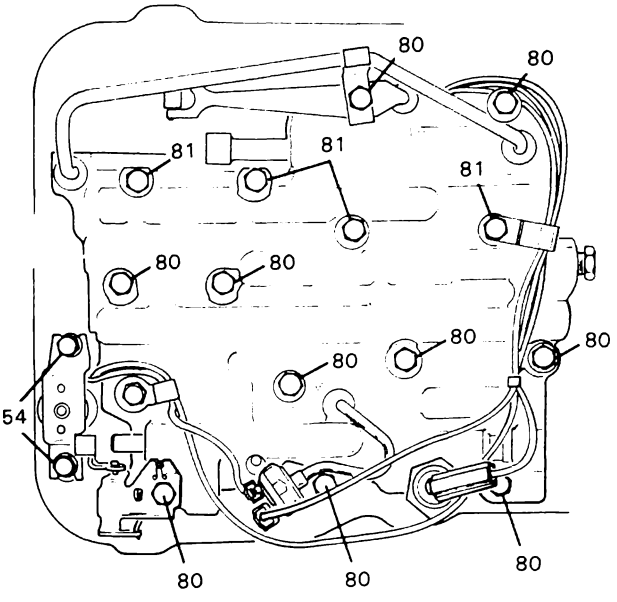

ILL. NO.	DESCRIPTION
54	BOLTS, HEX WASHER HEAD M6 X 1 X 12.0
80	BOLT, M6 X 1 X 45
81	BOLT, M6 X 1 X 60

HH0021-200-4R

Figure 39 Valve Body Bolt Location

TORQUE CONVERTER CLUTCH (TCC) DIAGNOSIS

To properly diagnose the Torque Converter Clutch (TCC) system, perform all electrical testing first and then the hydraulic testing. Refer to Torque Converter Section 6E2-C8 for additional information.

The TCC is applied by fluid pressure which is controlled by a solenoid located inside the Automatic Transmission assembly. The solenoid is energized or released by making or breaking an electrical circuit through a combination of switches and sensors.

TCC Electrical Diagnosis

- For electrical diagnosis of TCC, refer to the specific carline section in Section 8A, Electrical Diagnosis.
- For diagnosis of emission control related components of TCC, Refer to the specific section of 6E, Driveability and Emissions.
- For the diagnosis of TCC Hydraulic Controls, refer to the specific procedure and wiring diagrams provided in this section.

Functional Check Procedure

Inspect

1. Install a tachometer
2. Operate the vehicle until proper operating temperature is reached
3. Drive vehicle at 50-55 mph (80-88 Km/h) with light throttle (road load)
4. Maintaining throttle lightly touch the brake pedal and check for a slight bump when the TCC releases and a slight increase in engine RPM.
5. Release the brake, slowly accelerate and check for a re-apply of the converter clutch and a slight decrease in engine RPM.

Preliminary Checking Procedure

The purpose of the preliminary checking procedure is to isolate external (electrical) problems from internal (electrical or mechanical) ones.

Important

- Use only a scale type ohmmeter. High impedance type ohmmeters and those with a digital readout will not work.
- An ALCL scanner may be used to verify the electrical circuit. Remember, a completed ground does not indicate that the solenoid will apply.
- Do not bench test using an automotive type battery. Accidentally crossed wires will damage the internal diodes of the TCC solenoid.

External Controls

Inspect

- Connect voltmeter between transmission connector and ground.
- Turn key "ON"
- If 0 or low voltage is found, refer to Sections 6E and 8A for electrical diagnosis.
- If 12 volts are present at the connector, refer to the TCC hydraulic diagnosis.

TORQUE CONVERTER STATOR

The Torque Converter Stator roller clutch can have one of two different type malfunctions:

A. Stator Assembly freewheels in both directions.

B. Stator Assembly remains locked up at all times.

Condition A-Poor Acceleration Low Speed

The car tends to have poor acceleration from a standstill. At speeds above 30-35 mph (50-55 km/h), the car may act normal. If poor acceleration is noted, it should first be determined that the exhaust system is not blocked, the engine timing is correct and the transmission is in first (1st) gear when starting out.

If the engine freely accelerates to high r.p.m. in "NEUTRAL" (N), it can be assumed that the engine and exhaust system are normal. Checking for poor performance in "Drive" and Reverse will help determine if the stator is freewheeling at all times.

Condition B-Poor Acceleration High Speed

Engine r.p.m. and car speed limited or restricted at high speeds. Performance when accelerating from a standstill is normal. Engine may over-heat. Visual examination of the converter may reveal a blue color from over-heating.

If the converter has been removed, the stator roller clutch can be checked by inserting a finger into the splined inner race of the roller clutch and trying to turn the race in both directions. The inner race should turn freely clockwise, but not turn or be very difficult to turn counterclockwise.

TORQUE CONVERTER EVALUATION

The converter should be replaced if:

- Converter has an imbalance which cannot be corrected. (Refer to Converter Vibration Test Procedure)
- Converter is contaminated with engine coolant containing antifreeze.

The Converter Should Not be Replaced If:

- The oil has an odor, is discolored, and there is no evidence of metal or clutch facing particles.
- The threads in one or more of the three converter bolt holes are damaged.
  - Correct with thread insert. (Refer to Section 6A)

SECTION 200-4R

MW9

AUTOMATIC TRANSMISSION UNIT REPAIR

CONTENTS

TRANSMISSION DISASSEMBLY
GENERAL SERVICE INFORMATION DISASSEMBLY 200-4R-1
Intermediate Servo Assembly Removal 200-4R-1
Valve Body and Wiring Harness 200-4R-3
1-2 and 3-4 Accumulator Piston Assemblies 200-4R-4
Governor Assembly Removal 200-4R-4
Servo Pin Length Check 200-4R-4
Third Accumulator Check Valve Removal 200-4R-7
Overdrive Unit End Play Check 200-4R-8
Fourth Clutch Assembly 200-4R-8
Forward Clutch Shaft End Play Check 200-4R-9
Forward and Direct Clutch Disassembly 200-4R-9
Front Internal Gear to Output Shaft End Play Check 200-4R-9
Rear Carrier Removal 200-R4-12
Manual Shaft and Parking Pawl Removal 200-4R-12
COMPONENT REPAIR AND TRANSMISSION ASSEMBLY
Manual Shaft and Parking Pawl Assembly 200-4R-15
Rear Carrier and Internal Gear 200-4R-15
Roller Clutch and Rear Carrier 200-4R-17
Lo and Reverse Clutch Housing 200-4R-18
Front Gear Components 200-4R-21
Front Carrier Assembly 200-4R-22
Front Internal Gear to Output Shaft End Play Check 200-4R-23
Direct Clutch Assembly 200-4R-23
Forward Clutch Assembly 200-4R-26
Forward and Direct Clutch 200-4R-29
Center Support 200-4R-29
Forward Clutch Shaft End Play Check 200-4R-30
Overdrive Internal Gear 200-4R-31
Overrun Clutch and Overdrive Carrier Assembly 200-4R-32
Turbine Shaft 200-4R-33
Oil Pump Assembly 200-4R-35
Overdrive Unit End Play Check 200-4R-41
External Parts 200-4R-42
Governor Assembly 200-4R-42
Control Valve Assembly 200-4R-44
3-4 Accumulator 200-4R-45

TRANSMISSION DISASSEMBLY

GENERAL SERVICE INFORMATION

- OIL SEAL RINGS
  - If any seal rings are damaged, cut, or do not rotate in their groove, be certain to check the ring groove for debris or damage.
- THRUST WASHERS
  - Thrust washers and bearing surfaces may appear to be polished. This is a normal condition and should not be considered damage.
- SNAP RINGS
  - Do not over extend snap rings when removing or installing.

DISASSEMBLY

Clean

- Thoroughly clean transmission exterior.

Remove or Disconnect

- Torque converter.

Install or Connect

Tools Required
J-8763-02 Holding Fixture
J-3289-20 Base

1. J-8763-02 onto the transmission.
2. Holding fixture into J-3289-20.

Remove or Disconnect

- Drain the transmission through the rear.

Intermediate Servo Assembly

Remove or Disconnect (Figures 8 and 9)

Tools Required
J-29714 Servo Cover Depressor

1. Install J-29714.
2. Retaining ring (15).
3. Servo cover (16) and "O" ring seal (17).
4. Servo piston (19) and band apply pin (27).

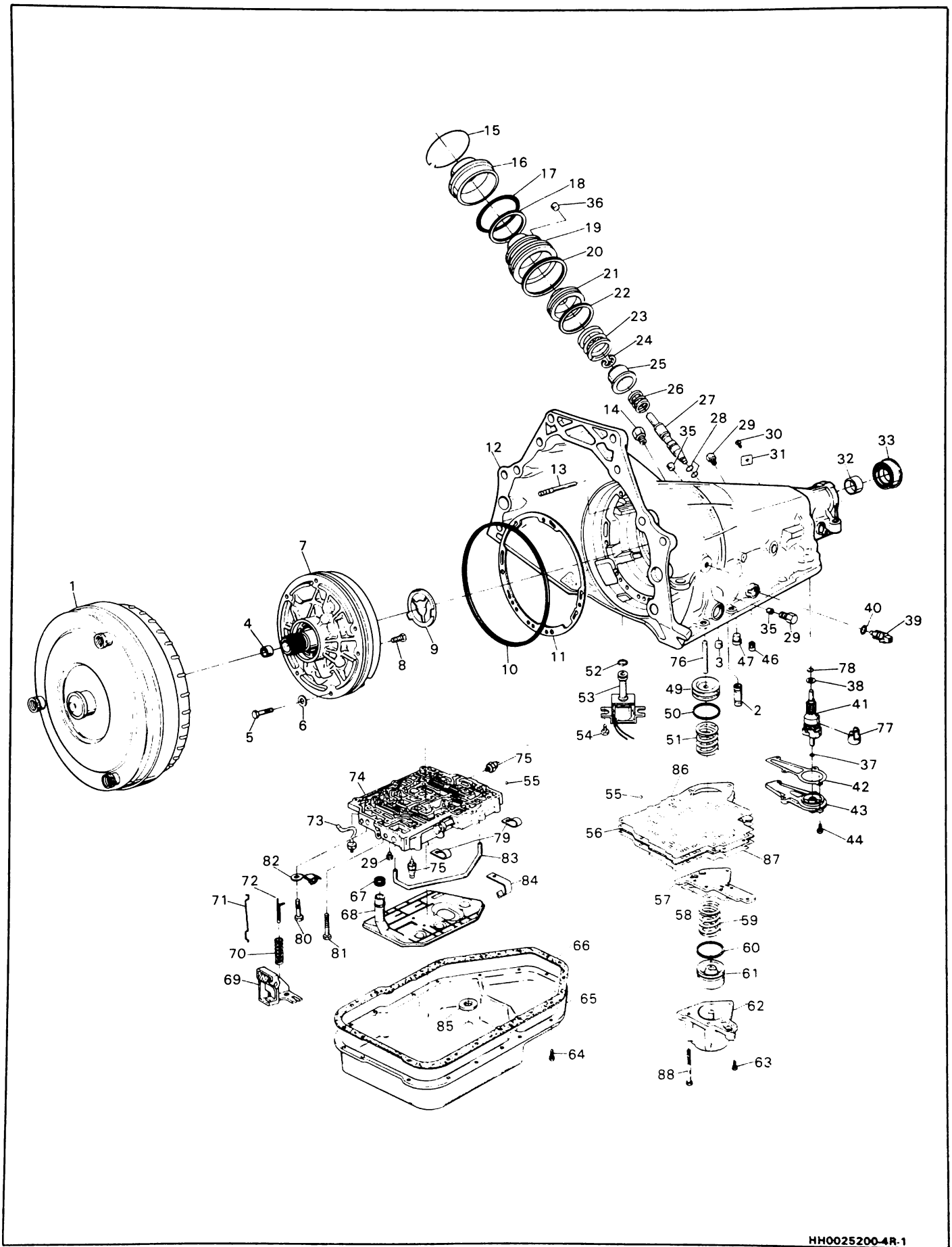

Figure 1 Case and External Parts

ILL. NO.	DESCRIPTION
1	CONVERTER ASSEMBLY, COMPLETE
2	RETAINER & BALL ASSEMBLY, 3RD ACCUMULATOR
3	PLUG, CUP (LUBE HOLE) (8.05 DIA.)
4	BUSHING, STATOR SHAFT
5	BOLTS, M8 X 1.25 X 62
6	WASHER, PUMP TO CASE BOLTS
7	PUMP ASSEMBLY, COMPLETE
8	BOLT, PUMP COVER TO BODY
9	WASHER, THRUST (HOUSING TO PUMP)
10	SEAL, RING (PUMP TO CASE)
11	GASKET, PUMP COVER TO CASE
12	CASE & BUSHING ASSEMBLY
13	PIPE, VENT
14	CONNECTOR, INVERTED FLARE (BRASS)
15	RING, SERVO COVER RETAINING
16	COVER, INTERMEDIATE SERVO
17	SEAL, "O" RING (INTERMEDIATE SERVO COVER)
18	RING, OIL SEAL (INNER)
19	PISTON, INTERMEDIATE SERVO (OUTER)
20	RING, OIL SEAL (OUTER)
21	PISTON, INTERMEDIATE SERVO (INNER)
22	RING, OIL SEAL PISTON (INNER)
23	SPRING, INTERMEDIATE SERVO CUSHION
24	RING, SNAP (APPLY PIN/RETAINER)
25	RETAINER, SERVO SPRING
26	SPRING, INTERMEDIATE SERVO (INNER)
27	PIN, INTERMEDIATE BAND APPLY (SELECTIVE)
28	RING, OIL SEAL (INTERMEDIATE BAND APPLY PIN)
29	PLUG, HEX HEAD 1/8" PIPE (2)
30	SCREW, TRUSS HEAD DRIVE (NAMEPLATE)
31	NAMEPLATE
32	BUSHING, CASE REAR
33	SEAL ASSEMBLY, REAR OIL
34	GEAR, SPEEDO DRIVEN (GOVERNOR)
35	PLUG, CUP (4TH ACCUMULATOR OR SERVO) (2)
36	PLUG, CUP (ORIFICE)
37	RING, OIL SEAL
38	WASHER, THRUST (GOVERNOR DRIVEN GEAR/CASE)
39	CONNECTOR, ELECTRICAL
40	SEAL, "O" RING (ELECTRICAL CONNECTOR)
41	GOVERNOR ASSEMBLY, COMPLETE
42	GASKET, GOVERNOR COVER
43	COVER ASSEMBLY, GOVERNOR
44	SCREW, GOVERNOR COVER
46	SEAL, REVERSE OIL (CASE TO HOUSING)
47	PIN, BAND ANCHOR
49	PISTON, 3-4 ACCUMULATOR
50	RING, OIL SEAL (3-4 ACCUMULATOR PISTON)
51	SPRING, 3-4 ACCUMULATOR
52	SEAL, "O" RING (SOLENOID)
53	SOLENOID ASSEMBLY
54	BOLTS, HEX WASHER HEAD M6 X 1 X 12.0
55	BALL, .25 DIAMETER
56	PLATE, VALVE BODY SPACER
57	PLATE, ACCUMULATOR
58	GASKET, ACCUMULATOR HSG. TO ACCUM. PLATE
59	SPRING, 1-2 ACCUMULATOR PISTON
60	RING, OIL SEAL (1-2 ACCUMULATOR PISTON)
61	PISTON, 1-2 ACCUMULATOR
62	HOUSING & PIN ASSEMBLY, 1-2 ACCUMULATOR
63	BOLT, ACCUMULATOR HOUSING
64	SCREW, CONICAL WASHER ASSEMBLY
65	PAN, TRANSMISSION OIL
66	GASKET, PAN
67	SEAL ASSEMBLY, FILTER NECK
68	FILTER ASSEMBLY, TRANSMISSION OIL
69	LEVER & BRACKET ASSEMBLY, THROTTLE
70	SPRING, LIFTER (T.V. EXHAUST VALVE)
71	LINK, THROTTLE LEVER TO CABLE
72	LIFTER, T.V. EXHAUST
73	SWITCH, PRESSURE 4-3
74	VALVE ASSEMBLY, CONTROL
75	SWITCH ASSEMBLY, PRESSURE (3RD OR 4TH)
76	PIN, ACCUMULATOR PISTON
77	CLIP, SPEEDO DRIVE GEAR
78	RING, GOVERNOR GEAR RETAINER
79	CLIP, SOLENOID WIRE (2)
80	BOLT, M6 X 1 X 45
81	BOLT, M6 X 1 X 60
82	CLIP, FILTER RETAINER
83	PIPE, SIGNAL OIL
84	RETAINER, SIGNAL OIL PIPE
85	MAGNET, CHIP COLLECTOR
86	GASKET, SPACER PLATE TO CASE
87	GASKET, VALVE BODY TO SPACER PLATE
88	BOLT, ACCUMULATOR HOUSING

HH0026200-4R-1

Figure 1L LEGEND

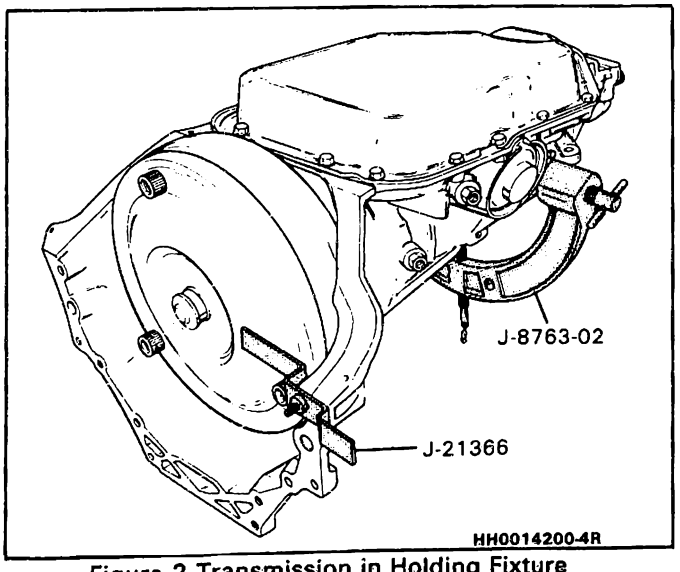

Figure 2 Transmission in Holding Fixture

5. Remove J-29714.

Valve Body and Wiring Harness

Remove or Disconnect (Figures 3 and 4)

1. Bolts (64), oil pan (65), and gasket (66).
2. Oil filter (68) and seal (67).
3. Electrical connections.
4. Bolts (80) and clips (82 and 79).
5. Bolts (54), solenoid (53), and "O" ring seal (52).
6. Case electrical connector (39) and "O" ring seal (40).

Remove or Disconnect

1. Throttle lever and bracket assembly (69) and throttle lever to cable link (71).
2. T.V. exhaust valve lifter (72) and spring (70).
3. Manual detent roller and spring assembly (708), signal oil pipe retainer (84), and signal pipe (83).
4. NON-C-3 MODELS ONLY.Pressure switch (73).
5. Remaining valve body bolts (80).

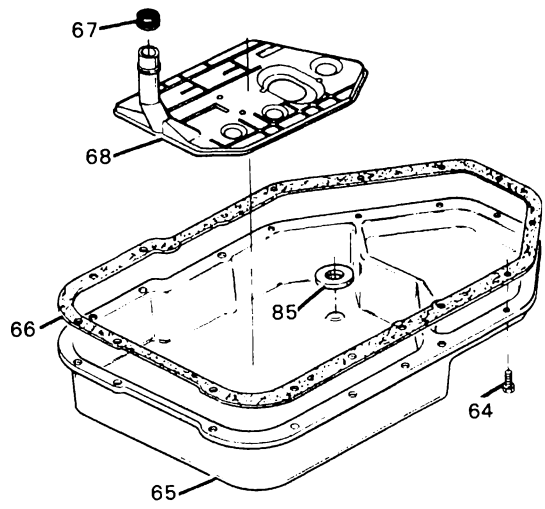

64 SCREW, CONICAL WASHER ASSEMBLY
65 PAN, TRANSMISSION OIL
66 GASKET, PAN
67 SEAL ASSEMBLY, FILTER NECK
68 FILTER ASSEMBLY, TRANSMISSION OIL
85 MAGNET, CHIP COLLECTOR

HH0027-2004R-1

Figure 3 Oil Pan and Filter

6. Control valve assembly (74) and manual valve (345).
7. (3) Check balls (55).

1-2 Accumulator, 3-4 Accumulator Piston Assembly

Remove or Disconnect (Figure 6)

1. Bolts (63), 1-2 accumulator housing (62), spring (59), plate (57), and gasket (58).
2. 1-2 Accumulator piston (61).
   - apply low air pressure (3 psi) to orifice in housing (62).
3. 1-2 Accumulator piston seal ring (60).
4. Spacer plate and gaskets (56).
5. 3-4 Accumulator piston (49), spring (51), and pin (76).

Important

Note position of spring (51) and piston (49). Parts must be installed in the same position as removed.

6. Piston seal ring (50).
7. (8) Check balls (55).

Governor Assembly

Remove or Disconnect (Figure 7)

1. Bolts (44), governor cover (43), and gasket (42).
2. Governor assembly (41).

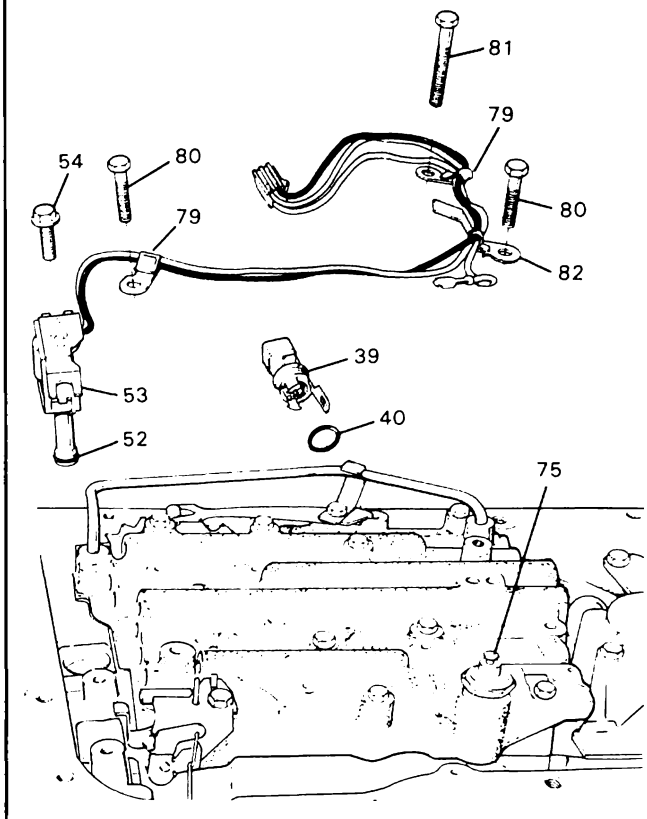

39 CONNECTOR, ELECTRICAL
40 SEAL, "O" RING (ELECTRICAL CONNECTOR)
52 SEAL, "O" RING (SOLENOID)
53 SOLENOID ASSEMBLY
54 BOLTS, HEX WASHER HEAD M6 X 1 X 12.0
75 SWITCH ASSEMBLY, PRESSURE (3RD OR 4TH)
79 CLIP, SOLENOID WIRE (2)
80 BOLT, M6 X 1 X 45
81 BOLT, M6 X 1 X 60
82 CLIP, FILTER RETAINER

HH0028200-4R

Figure 4 Solenoid and Electrical Connector

3. Speedometer assembly.

Servo Pin Length

As a diagnostic aid, the servo pin length should now be checked. If the pin length is too short or too long, be certain to inspect the intermediate band and drum for damage or wear when disassembled.

Measure (Figures 10 and 11)

Tools Required
J-25014-1 Intermediate Band Apply Pin Gage
J-25014-2 Intermediate Band Apply Pin Gage
J-8001 Dial Indicator

1. Install J-25014-2 in the intermediate servo bore. Align retaining ring with case slot.
2. Insert J-25014-1 into J-25014-2.
   - Make sure tapered end of J-25014-1 is properly located against the band apply pin.
   - Make sure the band apply pin is located in the case.

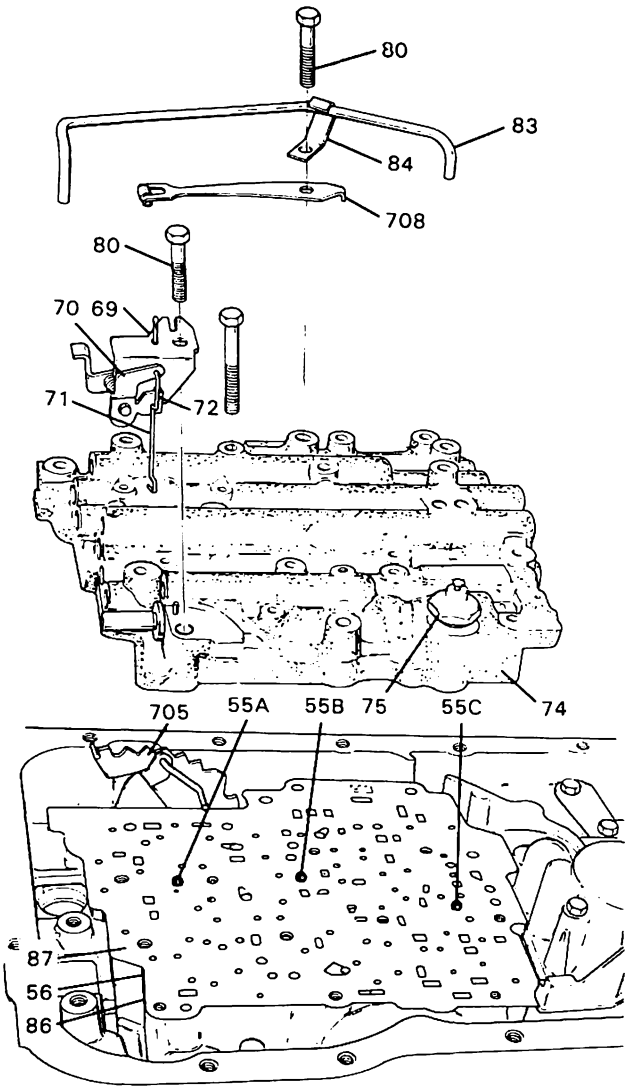

ILL. NO.	DESCRIPTION
55A	CHECK BALL #11
55B	CHECK BALL #8
55C	CHECK BALL #12
56	PLATE, VALVE BODY SPACER
69	LEVER & BRACKET ASSEMBLY, THROTTLE
70	SPRING, LIFTER (T.V. EXHAUST VALVE)
71	LINK, THROTTLE LEVER TO CABLE
72	LIFTER, T.V. EXHAUST
75	SWITCH ASSEMBLY, PRESSURE (3RD OR 4TH)
74	VALVE ASSEMBLY, CONTROL
80	BOLT, M6 X 1 X 45
83	PIPE, SIGNAL OIL
84	RETAINER, SIGNAL OIL PIPE
86	GASKET, SPACER PLATE TO CASE
87	GASKET, VALVE BODY TO SPACER PLATE
705	LINK, INSIDE DETENT (LEVER TO VALVE)
708	MANUAL DETENT ROLLER & SPRING ASSEMBLY

HH0029200-4R

Figure 5 Removing Control Valve Assembly

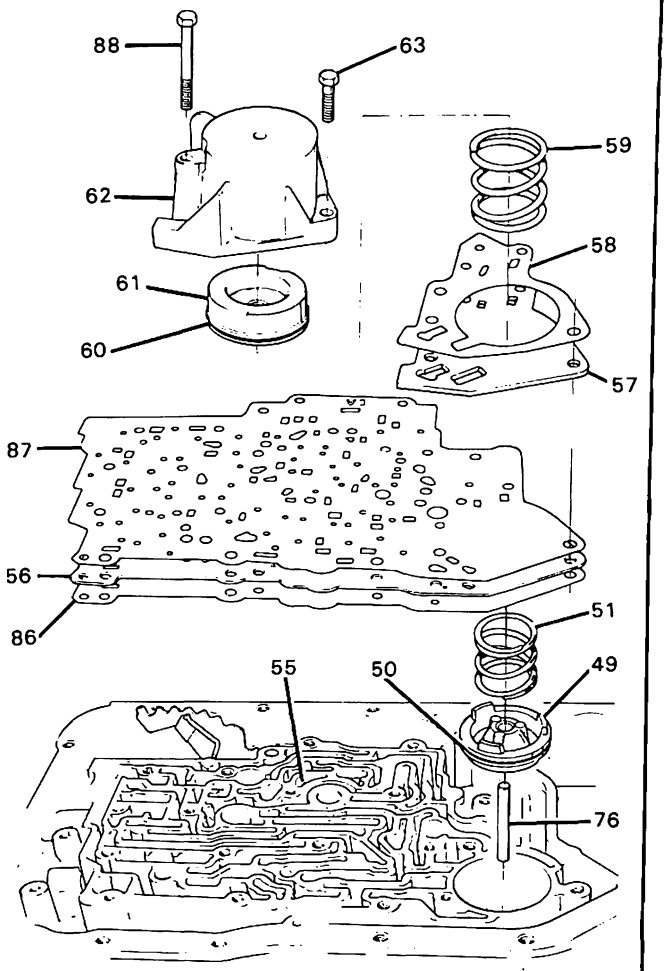

ILL. NO.	DESCRIPTION
49	PISTON, 3-4 ACCUMULATOR
50	RING, OIL SEAL (3-4 ACCUMULATOR PISTON)
51	SPRING, 3-4 ACCUMULATOR
55	BALL, .25 DIAMETER
56	PLATE, VALVE BODY SPACER
57	PLATE, ACCUMULATOR
58	GASKET, ACCUMULATOR HSG. TO ACCUM. PLATE
59	SPRING, 1-2 ACCUMULATOR PISTON
60	RING, OIL SEAL (1-2 ACCUMULATOR PISTON)
61	PISTON, 1-2 ACCUMULATOR
62	HOUSING & PIN ASSEMBLY, 1-2 ACCUMULATOR
63	BOLT, ACCUMULATOR HOUSING
76	PIN, ACCUMULATOR PISTON
86	GASKET, SPACER PLATE TO CASE
87	GASKET, VALVE BODY TO SPACER PLATE
88	BOLT, ACCUMULATOR HOUSING

HH0126-2004R-R2

Figure 6 1-2 and 3-4 Accumulator Assembly

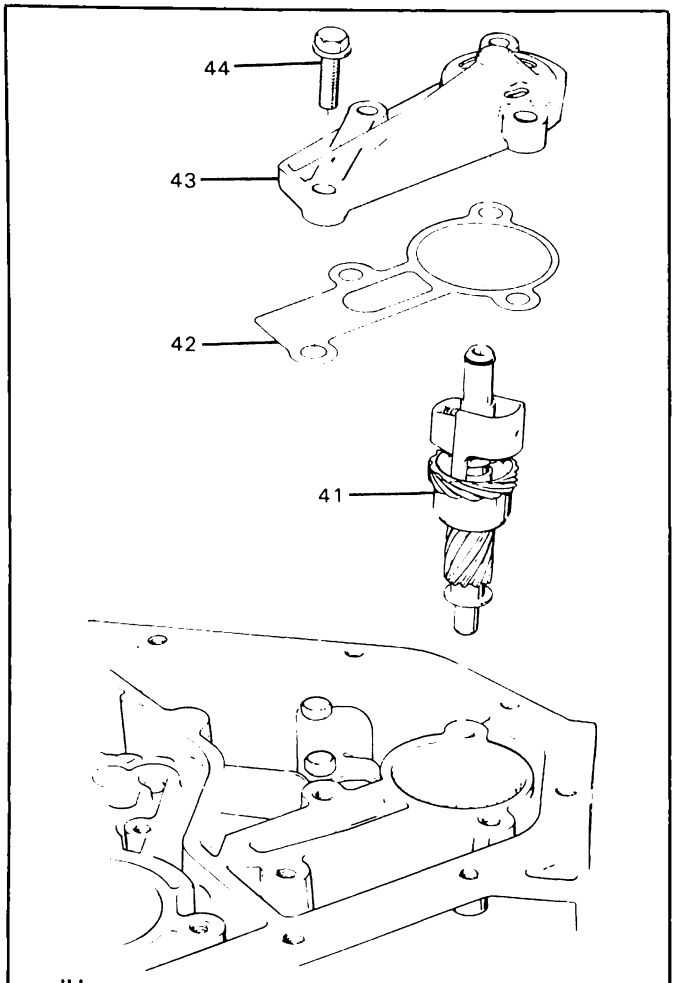

ILL. NO.	DESCRIPTION
41	GOVERNOR ASSEMBLY, COMPLETE
42	GASKET, GOVERNOR COVER
43	COVER ASSEMBLY, GOVERNOR
44	SCREW, GOVERNOR COVER

HH0031200-4R

Figure 7 Removing Governor Assembly

3. Install J-8001. Position dial indicator stem against the zero post. Zero indicator.

   J-25014-2 MUST SEAT SQUARELY AGAINST THE RETAINING RING.
4. Align the stepped side of pin J-25014-1 with torquing arm of J-25014-2.
5. Apply 12 N·m (100 LBS.-IN.) of torque.
6. Position dial indicator stem over J-25014-1. Read dial indicator. See chart for proper servo pin.

Important

Dial indicator travel is reversed, making the indicator read backwards. On an indicator that ranges from 0-100, a .5 mm (0.020") travel will read .2mm (0.008"). A 1.5mm (0.060") travel will read 1mm (0.040").

Inspect (Figure 12)

- Third accumulator check valve assembly for:
  - missing check ball
  - binding or stuck check ball

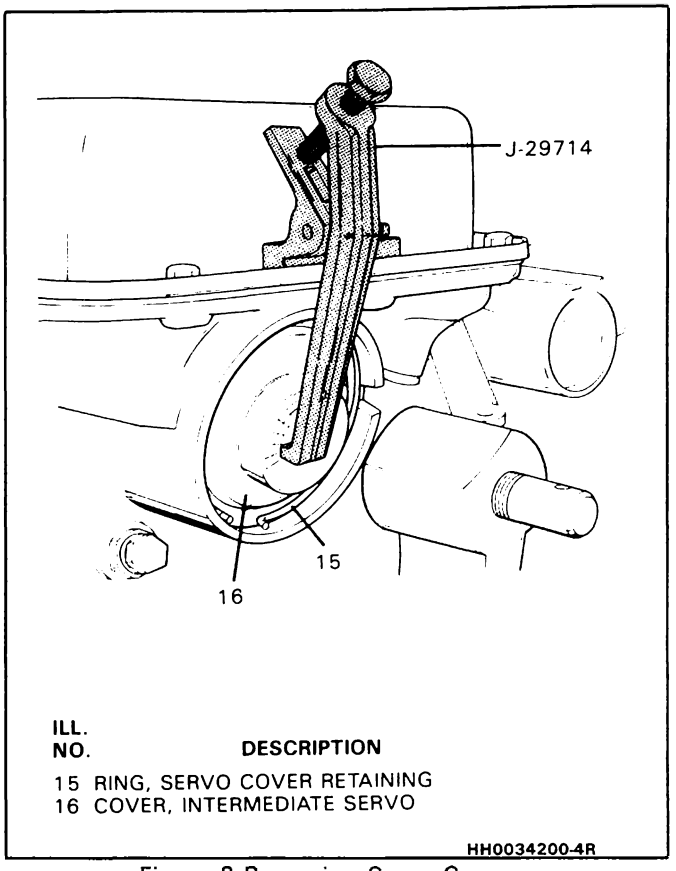

ILL. NO.	DESCRIPTION
15	RING, SERVO COVER RETAINING
16	COVER, INTERMEDIATE SERVO

HH0034200-4R

Figure 8 Removing Servo Cover

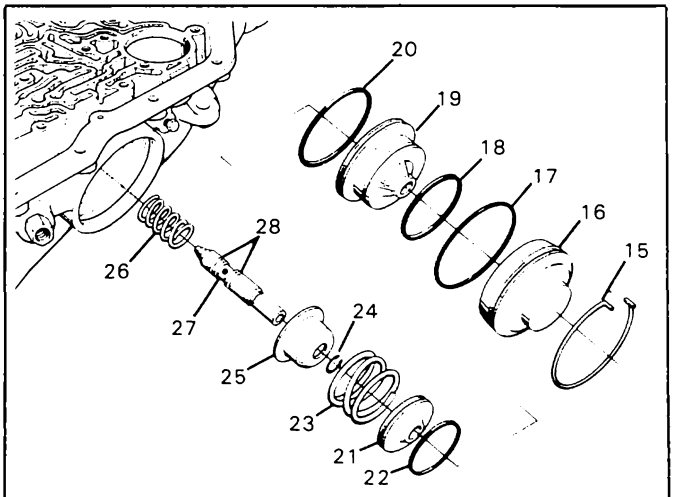

15 RING, SERVO COVER RETAINING
16 COVER, INTERMEDIATE SERVO
17 SEAL, "O" RING (INTERMEDIATE SERVO COVER)
18 RING, OIL SEAL (INNER)
19 PISTON, INTERMEDIATE SERVO (OUTER)
20 RING, OIL SEAL (OUTER)
21 PISTON, INTERMEDIATE SERVO (INNER)
22 RING, OIL SEAL PISTON (INNER)
23 SPRING, INTERMEDIATE SERVO CUSHION
24 RING, SNAP (APPLY PIN/RETAINER)
25 RETAINER, SERVO SPRING
26 SPRING, INTERMEDIATE SERVO (INNER)
27 PIN, INTERMEDIATE BAND APPLY (SELECTIVE)
28 RING, OIL SEAL (INTERMEDIATE BAND APPLY PIN)

HH0032200-4R

Figure 9 Intermediate Servo Assembly

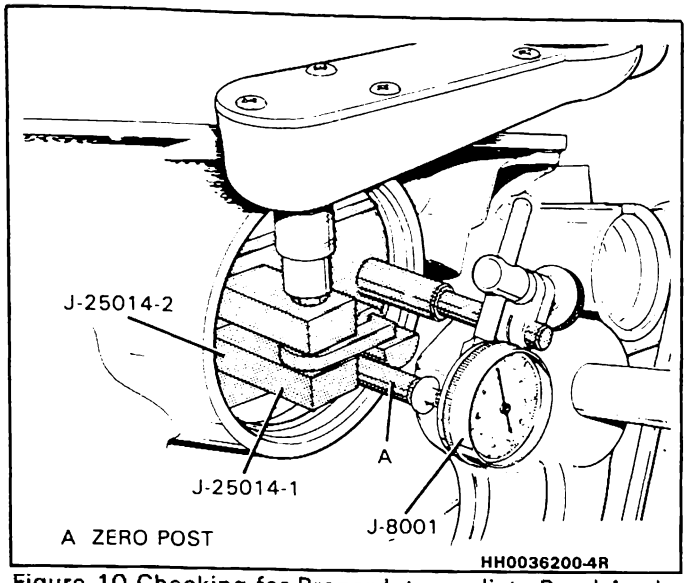

Figure 10 Checking for Proper Intermediate Band Apply Pin

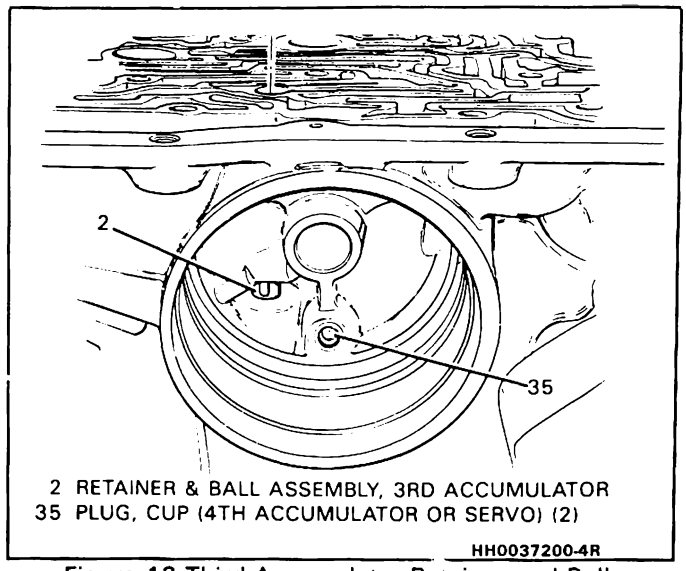

Figure 12 Third Accumulator Retainer and Ball Assembly

INTERMEDIATE BAND APPLY PIN SELECTION CHART

DIAL INDICATOR TRAVEL		APPLY PIN IDENTIFICATION
.0 - .72mm	(.0" - .029")	1 GROOVE
.72 - 1.44mm	(.029" - .057")	2 GROOVES
1.44 - 2.16mm	(.057" - .086")	3 GROOVES
2.16 - 2.88mm	(.086" - .114")	NONE

HH0035200-4R

Figure 11 Intermediate Band Apply Pin Selection Chart

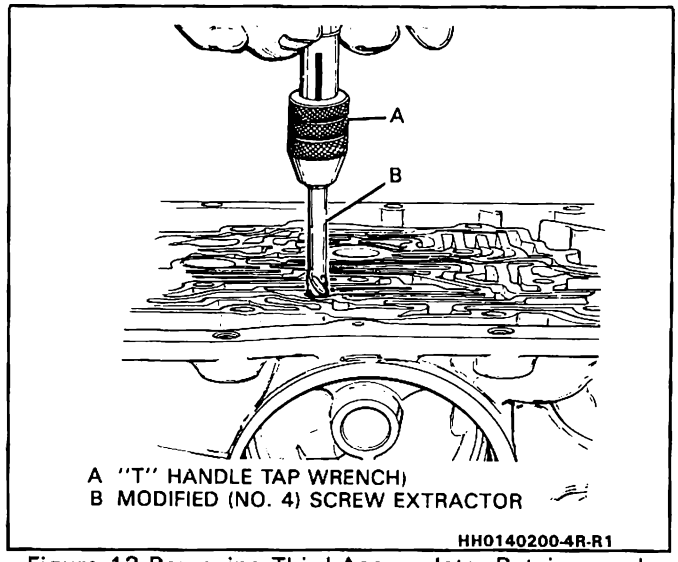

Figure 13 Removing Third Accumulator Retainer and Ball Assembly

- oil feed slot missing or restricted
- not seated in case

Third Accumulator Check Valve Removal

REMOVE THE THIRD ACCUMULATOR CHECK VALVE ONLY IF DAMAGED

Remove or Disconnect (Figure 13)

Tools Required

6.3 mm (#4) Screw Extractor Tap Handle

1. Insert screw extractor into third accumulator check valve assembly.
2. Pull straight out while turning tap handle.

Install or Connect (Figure 14)

Tools Required

9.5 mm (3/8") Metal Rod

1. Insert check valve (2) small end first, oil feed slot facing servo cover (16).
2. Seat check valve (2). Use a 9.5 mm (3/8") metal rod.

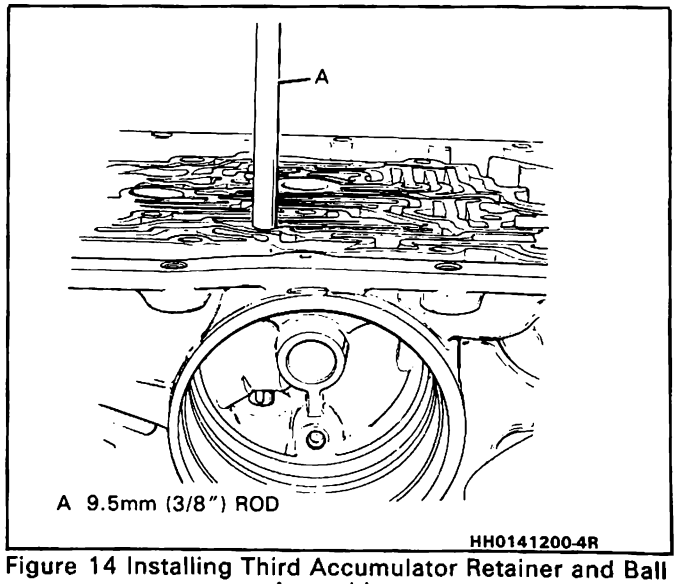

Figure 14 Installing Third Accumulator Retainer and Ball Assembly

Overdrive Unit End Play Check

As a diagnostic aid, overdrive unit end play should be checked prior to removing the internal parts. If the end play is not within specifications you should watch for possible worn or misassembled parts during disassembly.

Measure (Figures 15 and 16)

Tools required

J-8001 Dial Indicator
J-24773-A Oil Pump Remover and End Play Checking Fixture
J-25013-1 Output Shaft and Rear Unit Support Fixture
J-25022 End Play Fixture Adapter
J-25025-7A Post
J-29332 Output Shaft Support Fixture

1. Remove an oil pump bolt (5) and install 25025-7A.
2. Install J-25013-1 and J-29332-1 as shown.
3. Install J-25022 and J-24773-A as shown.
4. Install dial indicator
   - maintain approximately 3 lbs. of lifting force.
   - set indicator to zero.
   - increase lifting force to approximately 20 lbs.
   - end play should be 0.010-0.81 mm (.004"-.027")

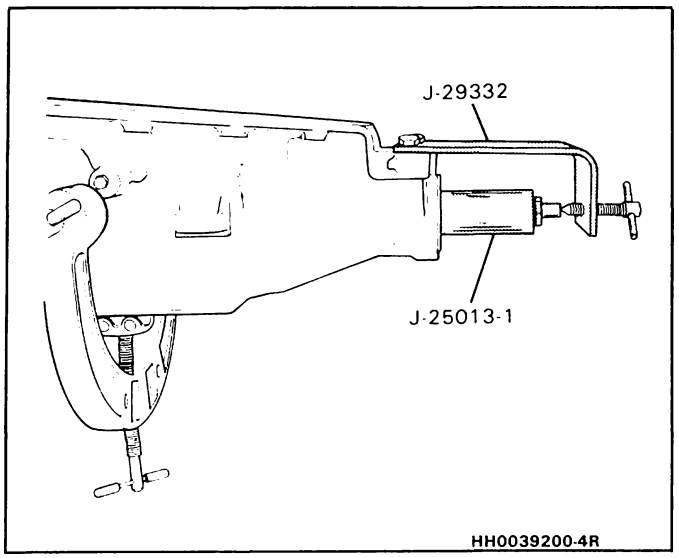

Figure 15 Installing Output Shaft and Rear Unit Support Fixture

Remove or Disconnect (Figures 18 and 19)

Tools Required

J-24773-A Oil Pump Remover and End Play Checking Fixture

1. Oil Pump seal (201).
2. Bolts (5) and washers (6).
3. Install J-24773-A.
4. Oil Pump (7), seal ring (10), and gasket (11).
5. Oil deflector plate (542).

Fourth Clutch Assembly

Remove or Disconnect (Figures 19 and 20)

1. Snap ring (506).
2. Overdrive (524) and fourth clutch plates (508) grasp turbine shaft (503) and lift.

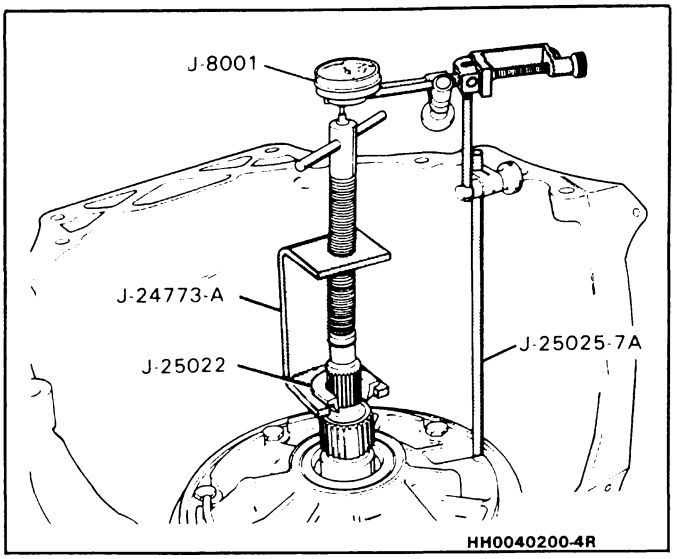

Figure 16 Checking Overdrive Unit End Play

OVERDRIVE UNIT END PLAY WASHER THICKNESS CHART

THICKNESS		IDENTIFICATION NUMBER AND/OR COLOR
4.25-4.36mm	(0.167"-0.171")	0 SCARLET
4.36-4.48mm	(0.172"-0.176")	1 WHITE
4.49-4.60mm	(0.177"-0.180")	2 COCOA BROWN
4.61-4.72mm	(0.181"-0.185")	3 GRAY
4.73-4.84mm	(0.186"-0.190")	4 YELLOW
4.85-4.96mm	(0.191"-0.195")	5 LIGHT BLUE
4.97-5.08mm	(0.196"-0.200")	6 PURPLE
5.09-5.20mm	(0.201"-0.204")	7 ORANGE
5.21-5.32mm	(0.205"-0.209")	8 GREEN

HH0038200-4R

Figure 17 Overdrive Unit Washer Thickness Chart

3. Thrust bearing (528).
4. Overdrive internal gear (529).
5. Thrust washer (531).

Remove or Disconnect (Figure 21)

Tools Required

J-29334 Fourth Clutch Compressor

1. Install J-29334-1 on the fourth clutch spring and retainer(533).
2. Install J-29334-2 on the case.
3. Compress the fourth clutch spring and retainer(533).
4. Snap ring (532).
5. Remove J-29334.
6. Fourth clutch piston (534).

Forward Clutch Shaft End Play Check

As a diagnostic aid a forward clutch shaft end play check should be made prior to removing. If the

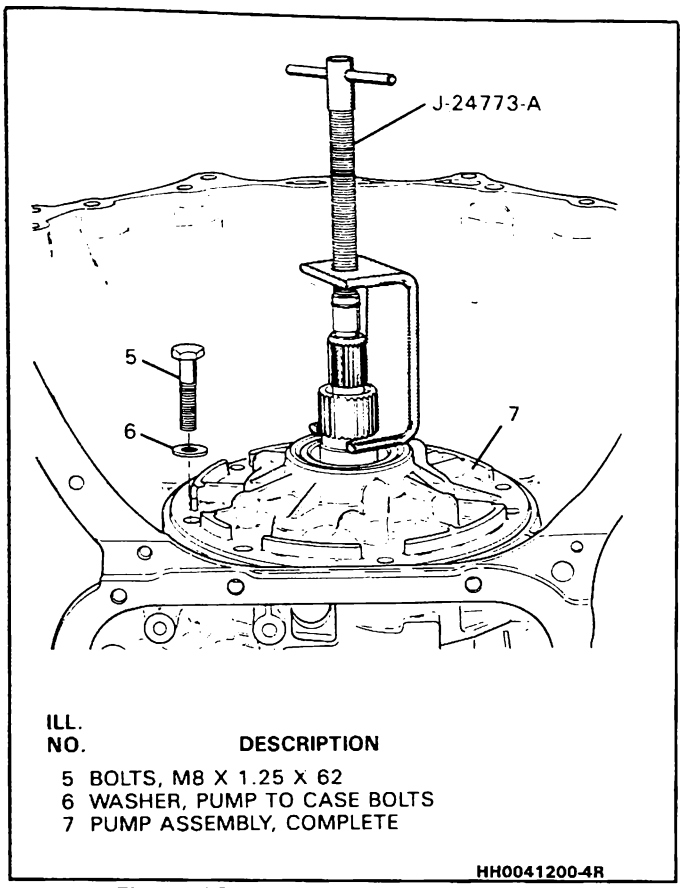

Figure 18 Removing Pump Assembly

end play is not within specifications, inspect for possible worn or misassembled parts during disassembly.

Measure (Figure 22)

Tools Required
J-8001 Dial Indicator
J-25013 Output Shaft and Rear Unit Support Fixture
J-29332 Output Shaft Support Fixture
J-25025-7A Post
J-29337 Forward and Direct End Play Checking Device

1. Push forward clutch shaft (618) down.
2. Install J-25013 and J-29332 as shown.
3. Install J-29337, J-25025-7A, and J-8001 as shown.
4. Turn adjusting screw on J-29332 until white/scribe line on J-25013-1 begins to disappear.
5. Zero dial indicator
   - lift on J-29337
   - end play should be 0.56mm-1.30mm (.022"-.051")
6. Remove J-8001, J-29337 and J-25025-7A.
   - Do not remove J-25013/J-29332

Remove or Disconnect (Figures 24, 25, 26)

Tools Required
J-7004 Slide Hammer
J-29334 Center Support Remover

1. (2) Bolts (538).
2. Snap ring (530).
3. Install J-29334/J-7004. Use snap ring (532).
4. Center support (537).
5. Thrust washer (541).

Forward and Direct Clutch Disassembly

Remove or Disconnect (Figures 27, 28, 29)

Tools Required
J-29337 Forward and Direct Clutch End Play Checking Device

1. Install J-29337 as shown.
2. Direct and Forward clutch assembly (604 and 618).
3. Direct clutch (604) from forward clutch (618).
4. Thrust washer (617).
5. Intermediate band assembly (602).
6. Band anchor pin (47).
7. Thrust washer (629).

Front Internal Gear to Output Shaft End Play Check

As a diagnostic aid, front gear end play should be checked prior to removing internal parts. If the end play is not within specifications,you should watch for worn or misassembled parts during disassembly.

Measure (Figures 30 and 31)

Tools Required
J-8001 Dial Indicator
J-7057 Plunger Extension
J-25013 Output Shaft and Rear Unit Support Fixture
J-29332 Output Shaft Support Fixture Clamp

1. Install clamp, J-7057, and J-8001 as shown.
2. Position J-7057 against the output shaft (665).
   - Zero dial indicator.
3. Turn the adjusting screw on J-29332 until white/scribe line begins to disappear.
4. Read dial indicator.
   End play should be 0.10mm-0.51mm(.004"-.025").

Remove or Disconnect (Figure 32)

1. Snap ring (630), selective washer (631), and thrust washer (632).
2. Front internal gear (633).
3. Front carrier (636) and roller bearing (635).
4. Front sun gear (638) and thrust bearing (637).
   - Thrust bearing (637) has only one thrust race.
5. Input drum (640) and rear sun gear (642).
6. Tanged thrust washer (643).

Remove or Disconnect (Figures 33 and 34)

Tools Required
#4 Screw Extractor

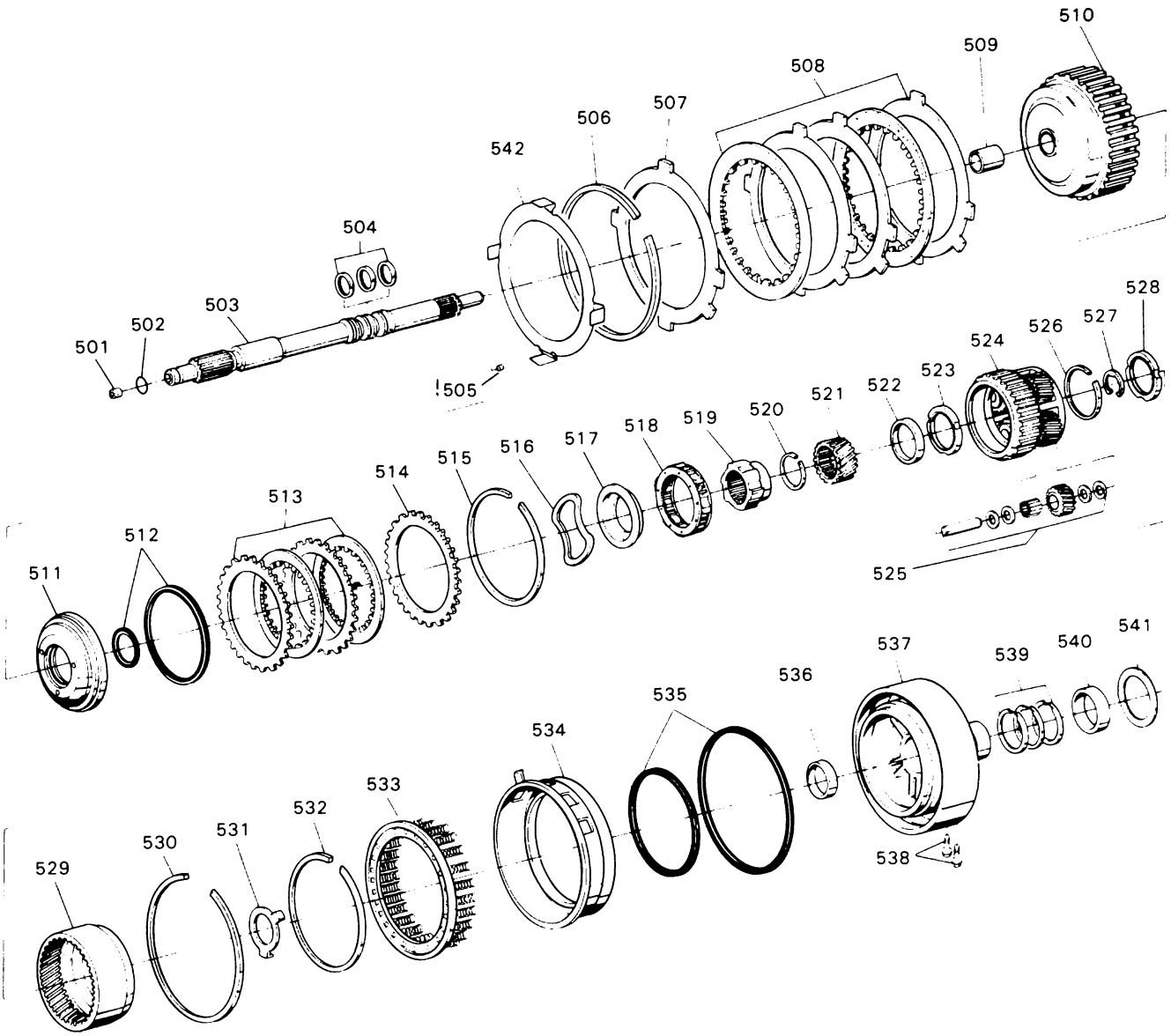

ILL. NO.	DESCRIPTION
501	RETAINER & BALL ASSEMBLY, CHECK VALVE
502	SEAL, "O" RING (TURBINE SHAFT/SELECTIVE WASHER)
503	SHAFT, TURBINE
504	RING, OIL SEAL (TURBINE SHAFT)
505	PLUG, TURBINE SHAFT (4.80 DIA.)
506	RING, SNAP (4TH CLUTCH RETAINER IN CASE)
507	PLATE, 4TH CLUTCH BACKING
508	PLATE ASSEMBLY, 4TH CLUTCH
509	BUSHING, OVERRUN CLUTCH
510	HOUSING, OVERRUN CLUTCH ASSEMBLY
511	PISTON ASSEMBLY, OVERRUN CLUTCH
512	SEALS, OVERRUN CLUTCH (INNER/OUTER)
513	PLATE ASSEMBLY, OVERRUN CLUTCH
514	PLATE, OVERRUN CLUTCH BACKING
515	RING, SNAP (OVERRUN CLUTCH HOUSING)
516	SPRING, WAVE (OVERRUN CLUTCH RELEASE)
517	RETAINER, OVERRUN CLUTCH RELEASE SPRING
518	ROLLER ASSEMBLY, OVERDRIVE CLUTCH
519	CAM, OVERDRIVE ROLLER CLUTCH
520	RING, SNAP (OVERRUN CLUTCH HUB)
521	GEAR, OVERDRIVE SUN
522	BUSHING, OVERDRIVE CARRIER
523	BEARING ASSEMBLY, THRUST (CARRIER/SUN)
524	CARRIER ASSEMBLY, OVERDRIVE (COMPLETE)
525	PINION ASSEMBLY, OVERDRIVE CARRIER
526	RING, SNAP (OVERDRIVE CARRIER)
527	RING, SNAP (TURBINE SHAFT CARRIER)
528	BEARING ASM., THRUST (CARRIER/INTERNAL GEAR)
529	GEAR, OVERDRIVE INTERNAL
530	RING, SNAP (CENTER SUPPORT TO CASE)
531	WASHER, THRUST (INTERNAL GEAR/SUPPORT)
532	RING, SNAP (SUPPORT 4TH CLUTCH SPRING)
533	RETAINER & SPRING ASSEMBLY, 4TH CLUTCH
534	PISTON, 4TH CLUTCH
535	SEALS, 4TH CLUTCH (INNER & OUTER)
536	BUSHING, CENTER SUPPORT (29.8 O.D. X 11.0)
537	SUPPORT, CENTER
538	SCREW, FLANGED (MOD) M10 X 1.5 X 23.0
539	RING, OIL SEAL (CENTER SUPPORT)
540	BUSHING, CENTER SUPPORT (33.8 O.D. X 11)
541	WASHER, THRUST (SUPPORT DIRECT CLUTCH)
542	PLATE, OIL DEFLECTOR

HH0042200-4R

Figure 19 Internal Components

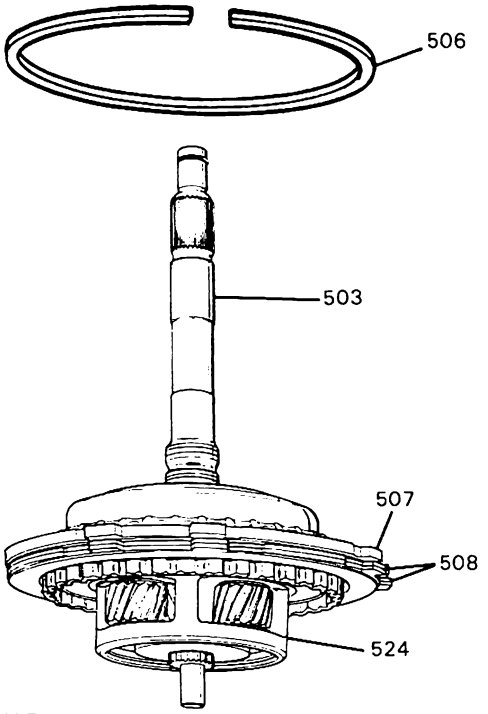

503 SHAFT, TURBINE
506 RING, SNAP (4TH CLUTCH RETAINER IN CASE)
507 PLATE, 4TH CLUTCH BACKING
508 PLATE ASSEMBLY, 4TH CLUTCH
524 CARRIER ASSEMBLY, OVERDRIVE (COMPLETE)

HH0044200-4R

Figure 20 Removing Overdrive Carrier Assembly

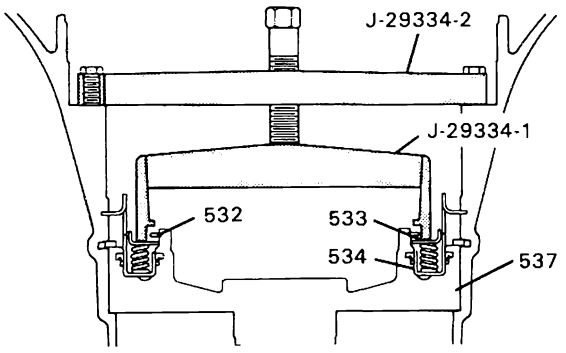

532 RING, SNAP (SUPPORT/4TH CLUTCH SPRING)
533 RETAINER & SPRING ASSEMBLY, 4TH CLUTCH
534 PISTON, 4TH CLUTCH
537 SUPPORT, CENTER

HH0045200-4R

Figure 21 Fourth Clutch Piston Removal

"T" Handle Tap Wrench
J-28542 Reverse Clutch Housing Remover and Installer

1. Modify 6.3mm (#4) screw extractor as follows:
   - Grind approximately 20mm (3/4") from the end.
2. Insert the screw extractor into the case cup plug (46).
3. Case cup plug (46).
   DO NOT REUSE CASE CUP PLUG
4. Snap ring (644).
   - Beveled side should be facing up.

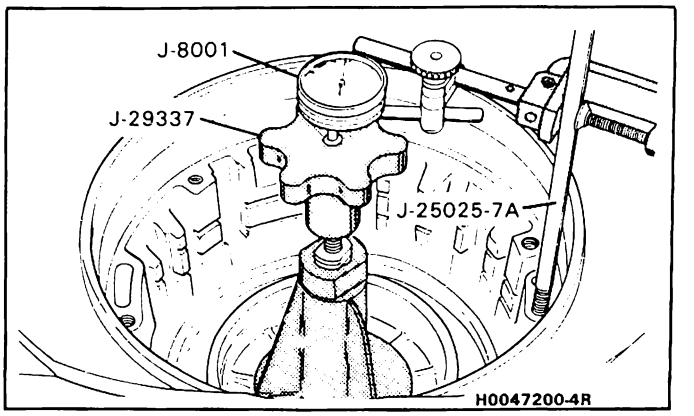

Figure 22 Forward Clutch Shaft End Play Check

THICKNESS		IDENTIFICATION NUMBER AND/OR COLOR
1.66-1.77mm	(0.065"-0.070")	1 - –
1.79-1.90mm	(0.070"-0.075")	2 - –
1.92-2.03mm	(0.076"-0.080")	3 - BLACK
2.05-2.16mm	(0.081"-0.085")	4 - LIGHT GREEN
2.18-2.29mm	(0.086"-0.090")	5 - SCARLET
2.31-2.42mm	(0.091"-0.095")	6 - PURPLE
2.44-2.55mm	(0.096"-0.100")	7 - COCOA BROWN
2.57-2.68mm	(0.101"-0.106")	8 - ORANGE
2.70-2.81mm	(0.106"-0.111")	9 - YELLOW
2.83-2.94mm	(0.111"-0.116")	10 - LIGHT BLUE
2.96-3.07mm	(0.117"-0.121")	11 - –
3.09-3.20mm	(0.122"-0.126")	12 - –
3.22-3.33mm	(0.127"-0.131")	13 - PINK
3.35-3.46mm	(0.132"-0.136")	14 - GREEN
3.48-3.59mm	(0.137"-0.141")	15 - GRAY

HH0046200-4R

Figure 23 Front Unit End Play Washer Thickness Chart

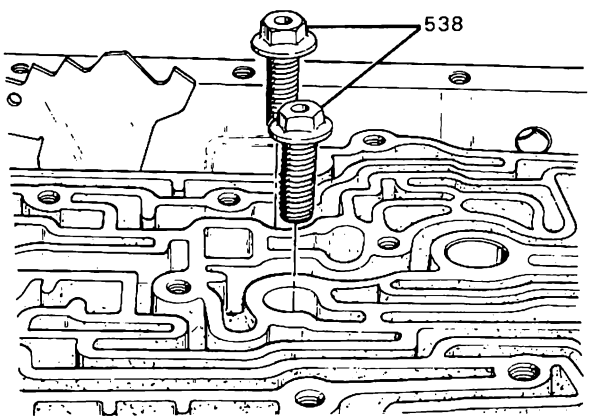

538 SCREW, FLANGED (MOD) M10 X 1.5 X 23.0

HH0049200-4R

Figure 24 Removing Center Support Bolts

5. Install J-28542 as shown.
6. Lo and reverse clutch housing (646).
7. Spacer (647).

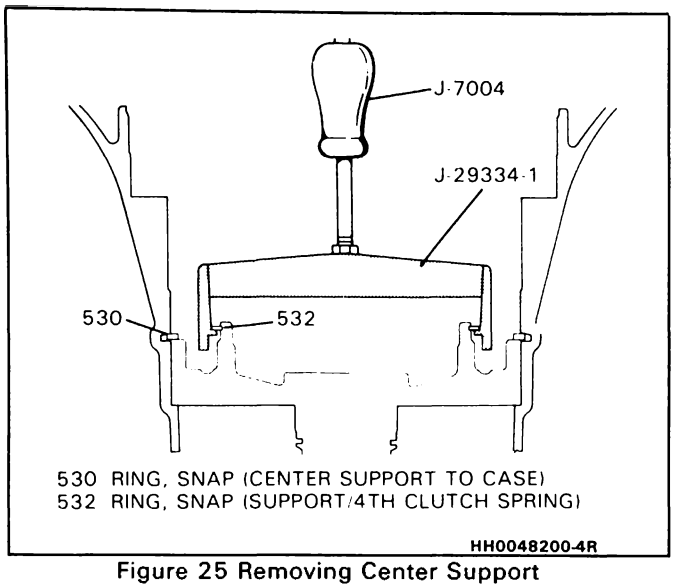

Figure 25 Removing Center Support

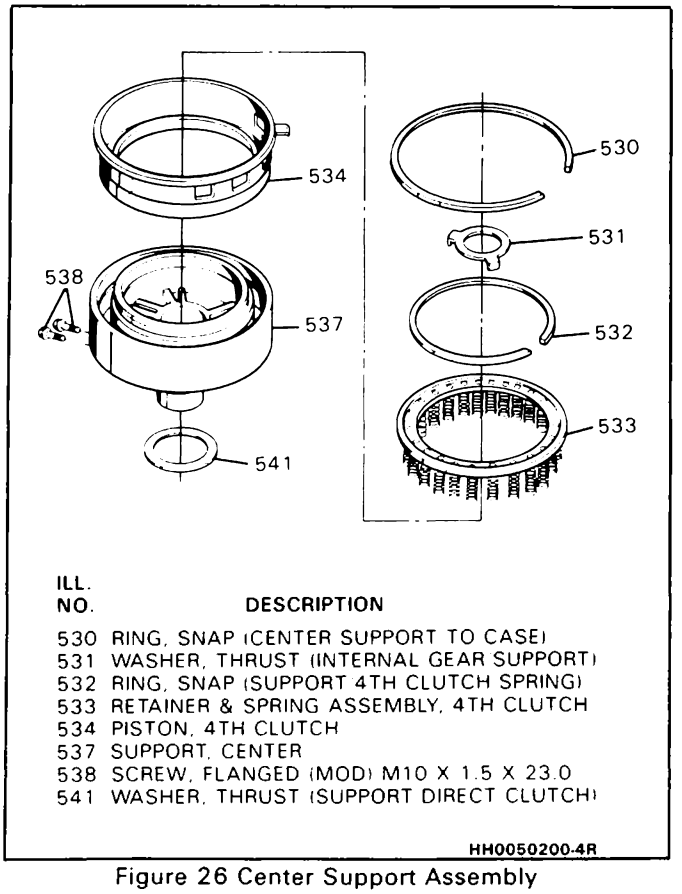

Figure 26 Center Support Assembly

Rear Carrier Removal

Remove or Disconnect (Figures 35 and 36)

1. Output shaft assembly (665).
2. Roller clutch (657/658) and rear carrier (661).
3. Thrust washer (662).
4. Wave plate (654) and Lo-reverse clutch plates (655).
5. Thrust washer (663).

NOTICE: The internal gear is pressed onto the output shaft. DO NOT REMOVE.

6. Rear internal gear (664).
7. Output shaft seal (33), if necessary.

Manual Shaft and Parking Pawl

Remove or Disconnect (Figures 37 and 38)

1. Hex nut (707) and inside detent lever (704).
2. Parking lock actuator rod assembly (709) and inside detent lever (704).
3. Retaining pin (703).
4. Manual shaft (702).
5. Manual valve link (705) and clip (706), if necessary.
6. Manual shaft seal (701).

Remove or Disconnect (Figures 37 and 39)

Tools Required
Modified #4 Screw Extractor

1. Modify #4 screw extractor as follows:
   - grind off approximately 20mm (3/4") from the end.
2. Bolts (710) and parking lock bracket (711).
3. Retaining pin (715) and cup plug (714). Use modified #4 screw extractor.
4. Parking pawl shaft (713). Use modified #4 screw extractor.
5. Parking pawl (712) and spring (716).

Component Repair and Transmission Assembly

Inspect

- Case (12) exterior for cracks or porosity
- Case to valve body face for interconnected oil passages or damage
- Air check all oil passages
- 3-4 accumulator bore for:
  - sharp edges
  - porosity
  - damage
- Intermediate servo bore for:
  - sharp edges
  - damage
  - porosity
  - orifice for debris
- Governor bore for:
  - sharp edges
  - porosity
  - damage
- Speedometer bore for:
  - sharp edges
  - damage
- All bolt hole threads for damage
  - heli-coil to repair
- Case interior for:
  - damaged ring grooves or casting flash
  - clutch plate lugs worn or damaged

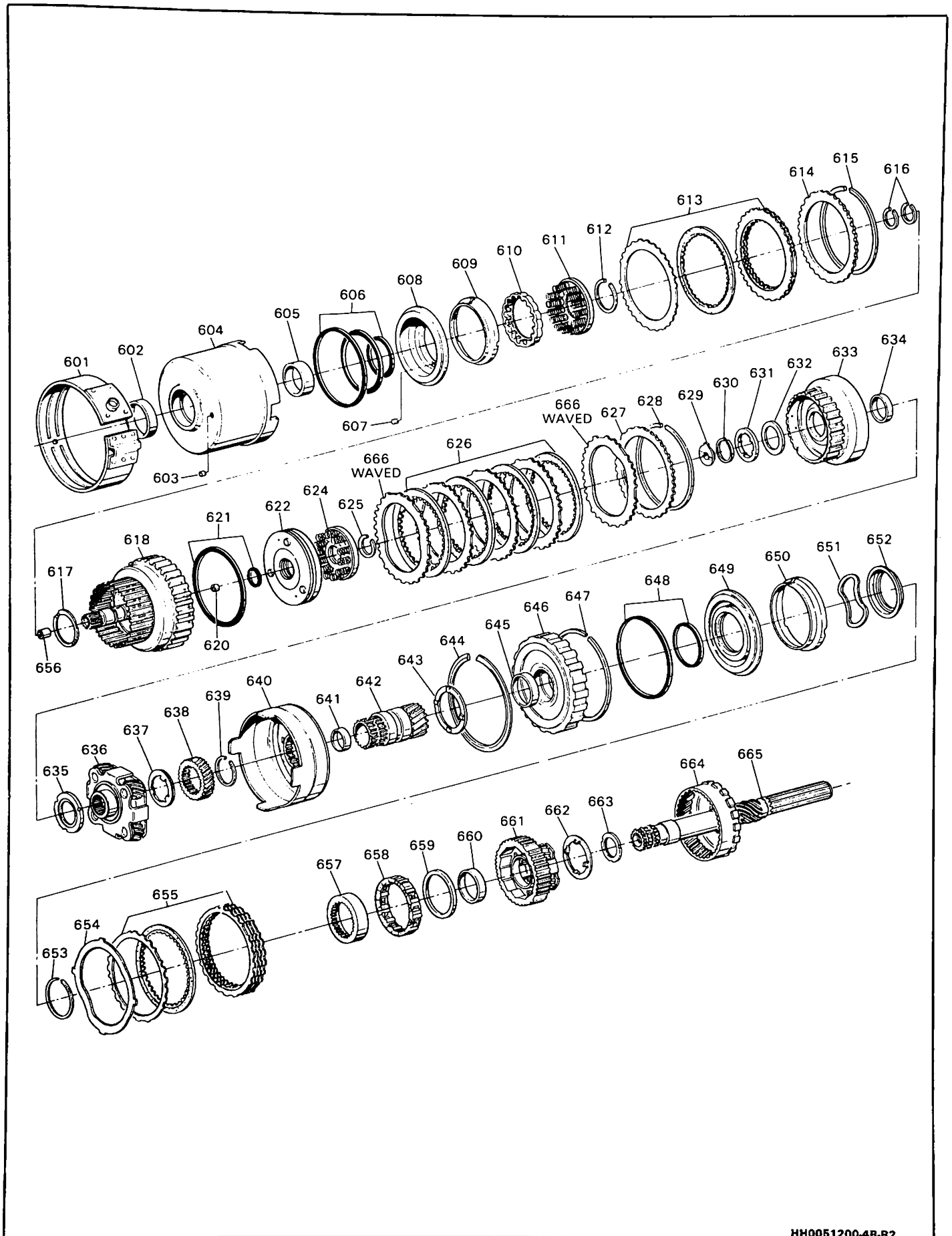

Figure 27 Internal Components

ILL. NO.	DESCRIPTION
601	BAND ASSEMBLY, INTERMEDIATE
602	BUSHING, DIRECT CLUTCH (FRONT)
603	RETAINER & BALL ASSEMBLY, CHECK VALVE
604	HOUSING & DRUM ASSEMBLY, DIRECT CLUTCH
605	BUSHING, DIRECT CLUTCH (REAR)
606	SEALS, DIRECT CLUTCH PISTON
607	RETAINER & BALL ASSEMBLY, CHECK VALVE
608	PISTON ASSEMBLY, DIRECT CLUTCH
609	RING, CLUTCH APPLY (DIRECT)
610	GUIDE, RELEASE SPRING
611	RETAINER & SPRING ASSEMBLY, DIRECT CLUTCH
612	RING, SNAP (SPRING RETAINER)
613	PLATE ASSEMBLY, DIRECT CLUTCH
614	PLATE, CLUTCH BACKING
615	RING, SNAP (DIRECT CLUTCH HOUSING)
616	SEALS, RING (FORWARD CLUTCH SHAFT) TEF
617	WASHER, THRUST (DIRECT/FORWARD CLUTCH)
618	HOUSING ASSEMBLY, FORWARD CLUTCH
620	PLUG, CUP (4.8 DIAMETER)
621	SEALS, FORWARD CLUTCH PISTON (PACKAGE)
622	PISTON ASSEMBLY, FORWARD CLUTCH
624	RETAINER & SPRING ASSEMBLY, FORWARD
625	RING, SNAP (FORWARD SPRING RETAINER)
626	PLATE, FORWARD CLUTCH (FLAT)
627	PLATE, CLUTCH BACKING (SELECTIVE)
628	RING, SNAP (FORWARD CLUTCH HOUSING)
629	WASHER, THRUST (FORWARD CL./OUTPUT) (SEL.)
630	RING, SNAP (OUTPUT SHAFT)
631	WASHER, THRUST (SELECTIVE REAR)
632	WASHER, THRUST (INTERNAL GEAR/REAR SEL.)
633	GEAR, FRONT INTERNAL
634	BUSHING, FRONT INTERNAL GEAR
635	BEARING ASM., ROLLER (INTERNAL GEAR/CARRIER)
636	CARRIER ASSEMBLY, FRONT (COMPLETE)
637	BEARING ASSEMBLY, THRUST (FRT. CARRIER/SUN)
638	GEAR, FRONT SUN
639	RING, SNAP (INPUT DRUM/REAR SUN)
640	DRUM, INPUT
641	BUSHING, REAR SUN GEAR
642	GEAR, REAR SUN
643	WASHER, THRUST (INPUT DRUM/HOUSING)
644	RING, SNAP (HOUSING/CASE)
645	BUSHING, LO & REVERSE HOUSING
646	HOUSING ASSEMBLY, LO & REVERSE CLUTCH
647	SPACER, HOUSING TO CASE
648	SEALS, LO & REVERSE PISTON (INNER/OUTER)
649	PISTON ASSEMBLY, LO & REVERSE CLUTCH
650	RING, CLUTCH APPLY (13.13mm)
651	SPRING, WAVE (REVERSE CLUTCH RELEASE)
652	RETAINER, LO & REVERSE CLUTCH SPRING
653	RING, SNAP (RETAINER/HOUSING)
654	PLATE, LO & REVERSE CLUTCH (WAVE)
655	PLATE, LO & REVERSE CLUTCH (1.969 MST)
656	BUSHING, FORWARD CLUTCH HOUSING
657	RACE, LO ROLLER CLUTCH
658	ROLLER ASSEMBLY, LO CLUTCH
659	BEARING, THRUST (REAR CAM/LO RACE)
660	BUSHING, REAR CARRIER (53.13 X 9.53)
661	CARRIER ASSEMBLY, REAR (COMPLETE)
662	WASHER, THRUST (REAR CARRIER/INTERNAL GEAR)
663	BEARING ASSEMBLY, ROLLER THRUST (SUN/INT.)
664	GEAR, REAR INTERNAL
665	SHAFT, OUTPUT
666	PLATE, CLUTCH 1.585 (WAVED)

HH0052200-4R-2

Figure 27L Legend

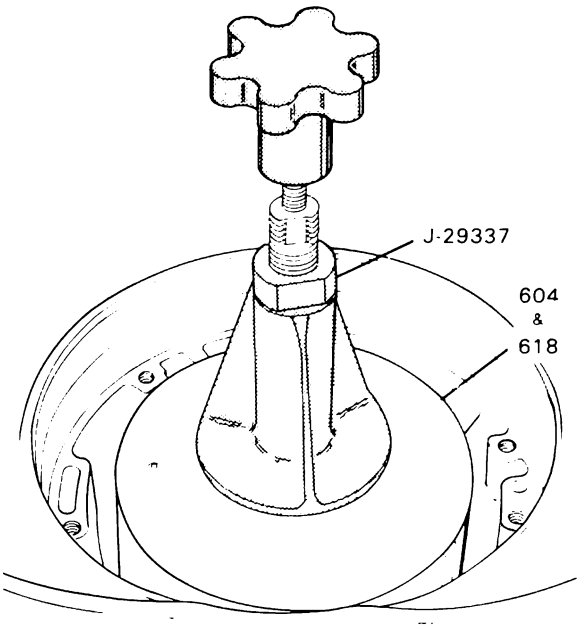

ILL. NO.	DESCRIPTION
604	HOUSING & DRUM ASSEMBLY, DIRECT CLUTCH
618	HOUSING ASSEMBLY, FORWARD CLUTCH

HH0053200-4R

Figure 28 Removing Forward and Direct Clutch Housing

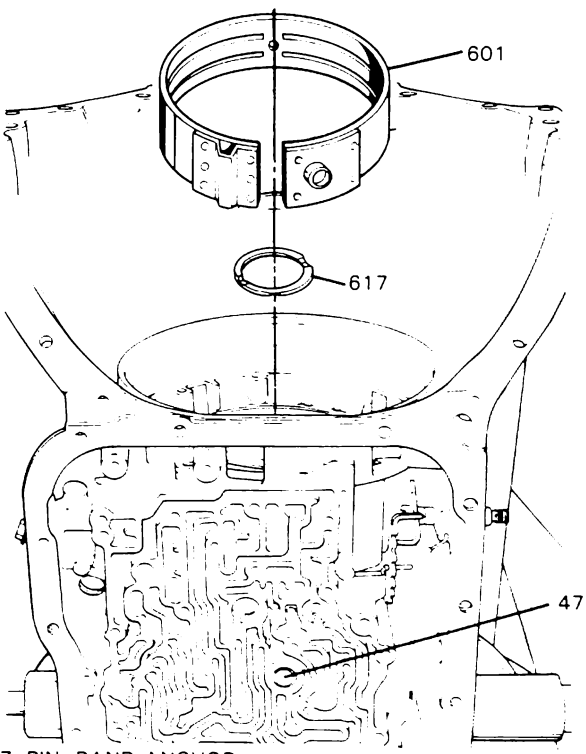

47 PIN, BAND ANCHOR
601 BAND ASSEMBLY, INTERMEDIATE
617 WASHER, THRUST

HH0054200-4R

Figure 29 Removing Intermediate Band

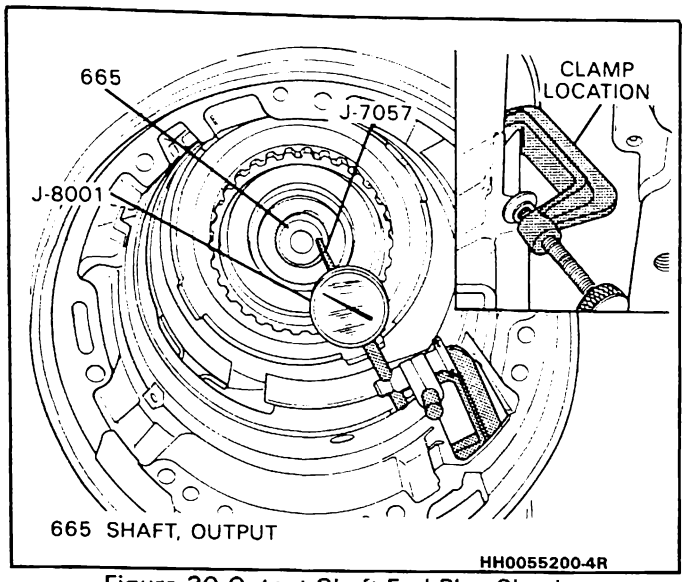

Figure 30 Output Shaft End Play Check

THICKNESS		IDENTIFICATION NUMBER AND/OR COLOR
2.90-3.01mm	(0.114"-0.119")	1 - ORANGE
3.08-3.19mm	(0.121"-0.126")	2 - WHITE
3.26-3.37mm	(0.128"-0.133")	3 - YELLOW
3.44-3.55mm	(0.135"-0.140")	4 - BLUE
3.62-3.73mm	(0.143"-0.147")	5 - RED
3.80-3.91mm	(0.150"-0.154")	6 - BROWN
3.98-4.09mm	(0.157"-0.161")	7 - GREEN
4.16-4.27mm	(0.164"-0.168")	8 - BLACK
4.34-4.45mm	(0.171"-0.175")	9 - PURPLE

HH0056200-4R

Figure 31 Rear Unit End Play Washer Thickness Chart

- Bushing scored, worn, or damaged (see Bushing Replacement)

Manual Shaft and Parking Pawl

Inspect

- Actuator rod (709) for damage
- Inside detent lever (704) for damage or cracks
- Manual shaft (702) for damage or burrs

Install or Connect (Figures 40 and 41)

1. Parking pawl (712) and spring (716).
2. Parking pawl shaft (713) into case (12) and parking pawl (712).
3. Retaining pin (715) and cap plug (714).
   - CHECK FOR PROPER OPERATION
4. Bolts (710) and parking lock bracket (711).
   - Torque to 24 N·m (18 lbs.-ft.)
5. Actuator rod (709) and inside detent lever (704).

Install or Connect (Figures 40 and 41)

1. Manual shaft seal (701). Lubricate seal lip.
2. Manual shaft (702), identification ring groove first.
3. Retaining pin (703) and hex nut (707).

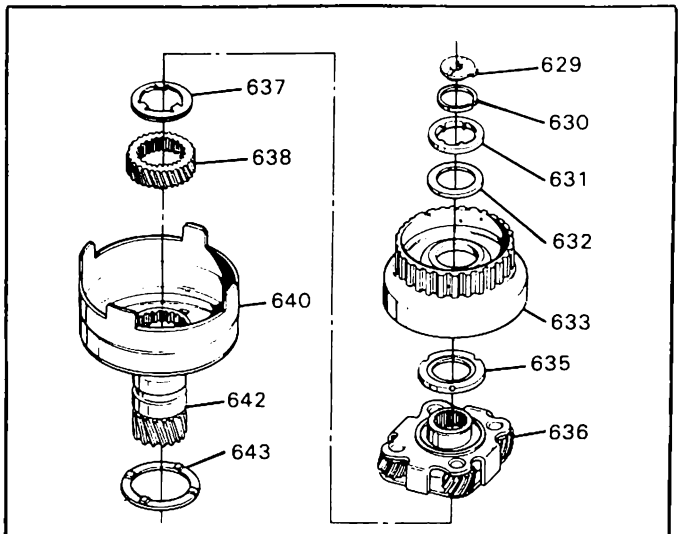

629 WASHER, THRUST (FORWARD CL./OUTPUT) (SEL.)
630 RING, SNAP (OUTPUT SHAFT)
631 WASHER, THRUST (SELECTIVE REAR)
632 WASHER, THRUST (INTERNAL GEAR/REAR SEL.)
633 GEAR, FRONT INTERNAL
635 BEARING ASM., ROLLER (INTERNAL GEAR/CARRIER)
636 CARRIER ASSEMBLY, FRONT (COMPLETE)
637 BEARING ASSEMBLY, THRUST (FRT. CARRIER/SUN)
638 GEAR, FRONT SUN
640 DRUM, INPUT
642 GEAR, REAR SUN
643 WASHER, THRUST (INPUT DRUM/HOUSING)

HH0057200-4R

Figure 32 Removing Front Internal Gear, Carrier and Input Drum

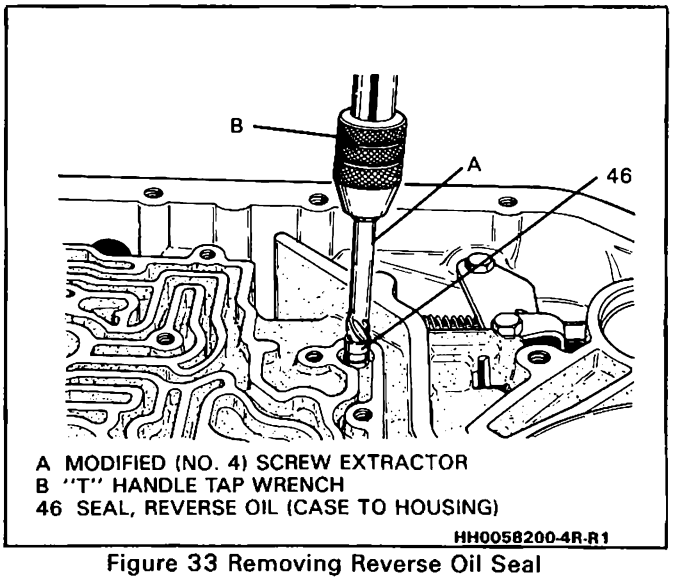

Figure 33 Removing Reverse Oil Seal

- Torque to 31 N·m (23 lbs.-ft.)

Rear Carrier

Inspect

- Journals and snap ring grooves for wear or damage
- Lubrication passages for restrictions
- Splines for damage
- Governor drive gear for chipped or cracked teeth

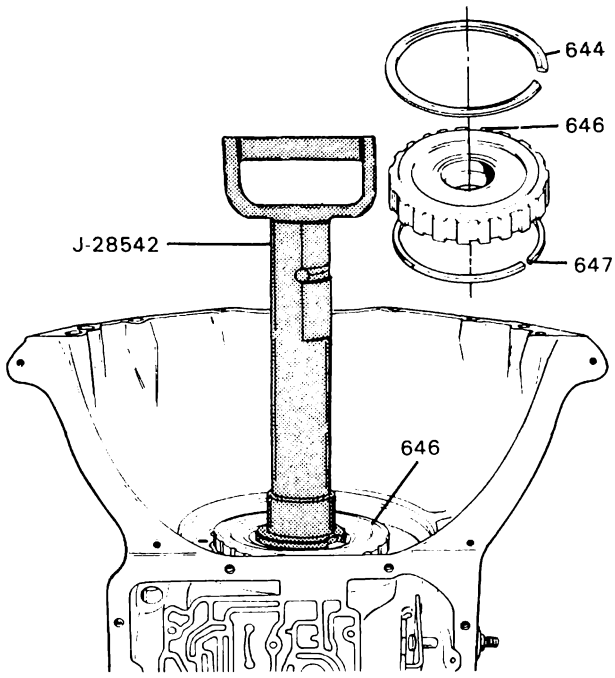

ILL. NO.	DESCRIPTION
644	RING, SNAP (HOUSING/CASE)
646	HOUSING ASSEMBLY, LO & REVERSE CLUTCH
647	SPACER, HOUSING TO CASE

HH0059200-4R

Figure 34 Removing Lo and Reverse Clutch Housing

Install or Connect (Figure 42)

Tools Required
J-21426 Seal Installer

Rear Internal Gear

The rear internal gear is pressed onto the output shaft and is not removed. These units are serviced as an assembly.

Inspect

- Rear internal gear for:
  - worn or damaged splines
  - worn or scored bearing surfaces
  - worn or damaged parking pawl lugs
- Rear internal gear for:
  - worn or damaged splines
  - worn or scored bearing surfaces
  - worn or damaged parking pawl lugs
- Rear internal gear to rear sun gear thrust washer for:
  - pitting
  - scoring
  - damage

Assemble (Figure 43)

1. Rear internal gear (664) pressed onto the output shaft (665).
2. Thrust bearing (663). Inside diameter of race against gear.

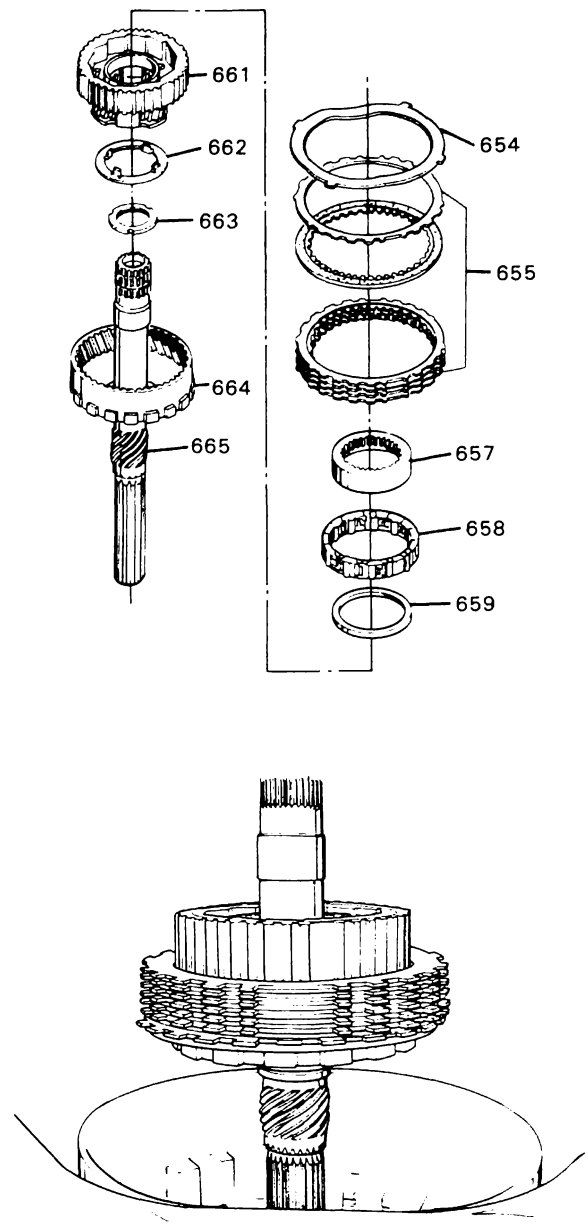

ILL. NO.	DESCRIPTION
654	PLATE, LO & REVERSE CLUTCH (WAVE)
655	PLATE, LO & REVERSE CLUTCH (1.969 MST)
657	RACE, LO ROLLER CLUTCH
658	ROLLER ASSEMBLY, LO CLUTCH
659	BEARING, THRUST (REAR CAM-LO RACE)
661	CARRIER ASSEMBLY, REAR (COMPLETE)
662	WASHER, THRUST (REAR CARRIER/INTERNAL GEAR)
663	BEARING ASSEMBLY, ROLLER THRUST (SUN/INT.)
664	GEAR, REAR INTERNAL
665	SHAFT, OUTPUT

HH0060200-4R

Figure 35 Removing Output Shaft, Rear Internal Gear and Carrier Assemblies

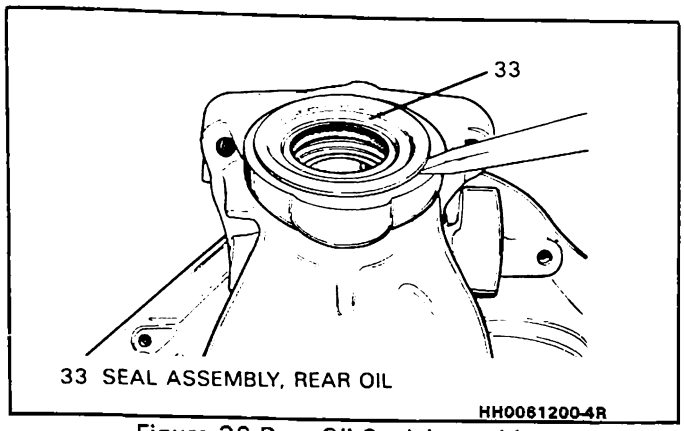

Figure 36 Rear Oil Seal Assembly

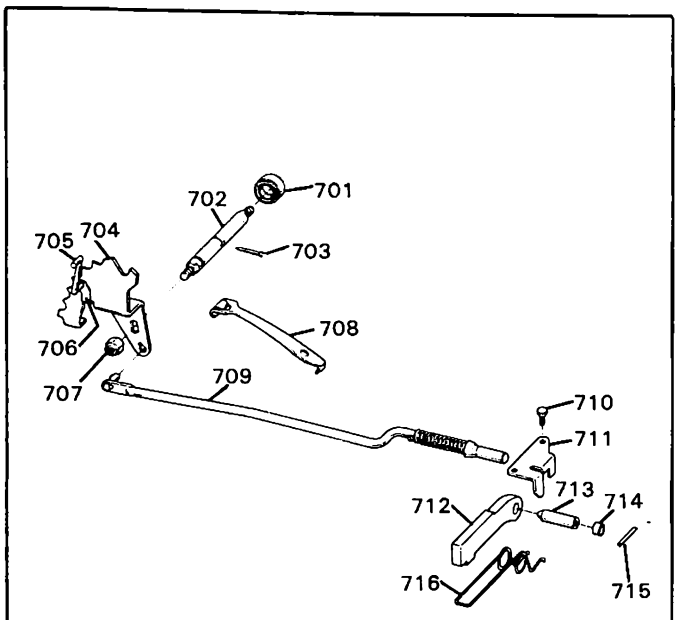

ILL. NO.	DESCRIPTION
701	SEAL, MANUAL SHAFT
702	SHAFT, MANUAL
703	PIN, RETAINING (MANUAL SHAFT TO CASE)
704	LEVER, INSIDE DETENT
705	LINK, INSIDE DETENT (LEVER TO VALVE)
706	CLIP, LINK TO DETENT LEVER
707	NUT, HEX
708	MANUAL DETENT ROLLER & SPRING ASSEMBLY
709	ROD ASSEMBLY, PARKING LOCK
710	BOLT, PARK LOCK BRACKET TO CASE (M8 X 1.25 X 20)
711	BRACKET, PARKING LOCK
712	PAWL, PARKING LOCK
713	SHAFT, PARKING LOCK PAWL
714	PLUG, STEEL CUP (.38 DIAMETER)
715	PIN, SLOTTED SPRING
716	SPRING, PARKING PAWL RETURN

HH0062200-4R-R1

Figure 37 Manual Shaft and Detent Lever Assemblies

Roller Clutch and Rear Carrier

Disassemble

1. Roller clutch race (657).
2. Roller clutch (658).
3. Thrust washer (659).

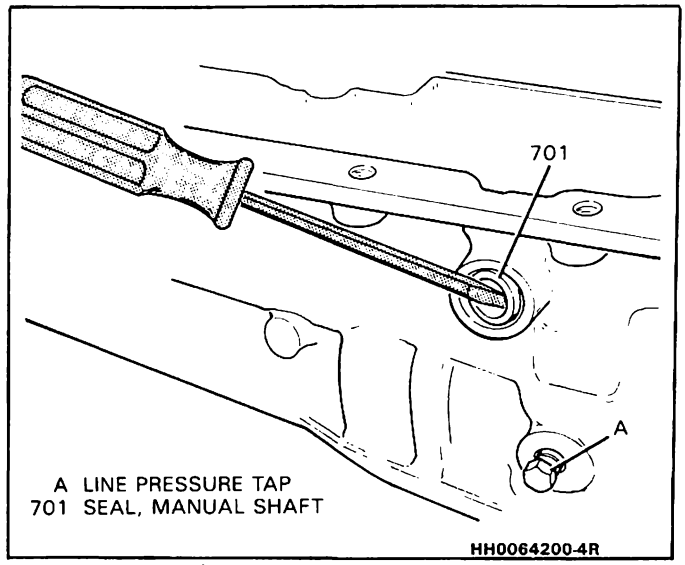

Figure 38 Removing Manual Shaft Seal

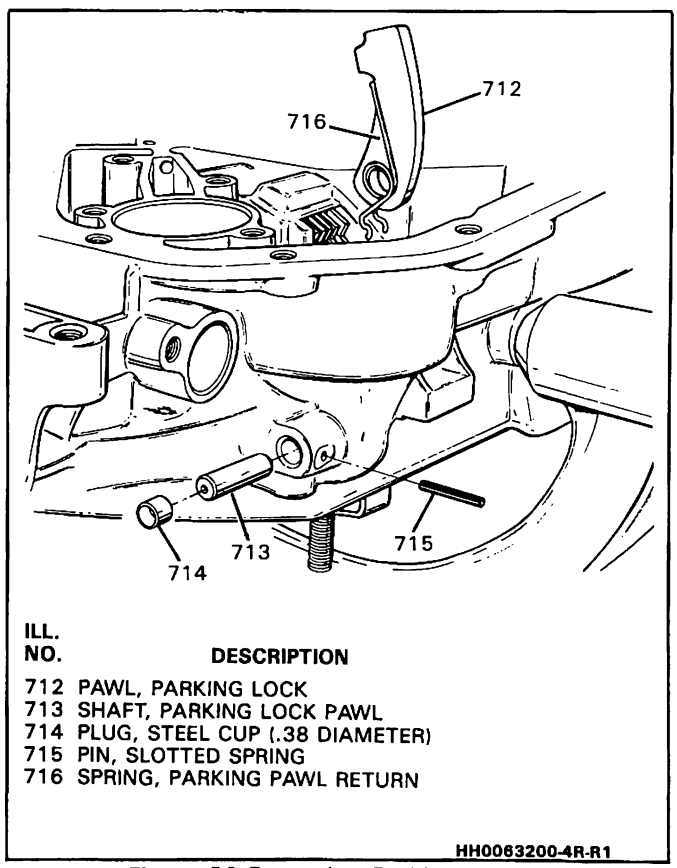

ILL. NO.	DESCRIPTION
712	PAWL, PARKING LOCK
713	SHAFT, PARKING LOCK PAWL
714	PLUG, STEEL CUP (.38 DIAMETER)
715	PIN, SLOTTED SPRING
716	SPRING, PARKING PAWL RETURN

HH0063200-4R-R1

Figure 39 Removing Parking Pawl

Inspect

- Roller clutch for:
  - pitting
  - scoring
  - heat damage
- Roller clutch for:
  - missing rollers or springs
  - wear or damage
- Thrust washer for:
  - scoring
  - pitting

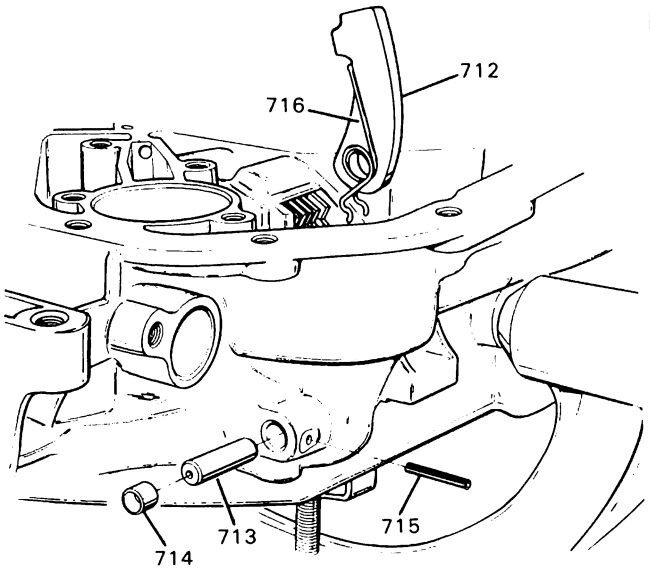

ILL. NO.	DESCRIPTION
712	PAWL, PARKING LOCK
713	SHAFT, PARKING LOCK PAWL
714	PLUG, STEEL CUP (.38 DIAMETER)
715	PIN, SLOTTED SPRING
716	SPRING, PARKING PAWL RETURN

HH0063200-4R-R1

Figure 40 Installing Parking Pawl

- damage
- Tanged thrust washer for:
  - pitting
  - scoring
  - damage
- Bushing for scoring or damage (See Bushing Replacement)

Measure

- Check pinion clearance as shown.
  End play should be 0.24mm-0.69mm (.009"-.027").

Inspect

- Pinions for:
  - rough bearings
  - cracked or chipped teeth

Assemble (Figure 46)

1. Thrust bearing (663).
2. Compress spring with forefinger and install roller.
3. Roller clutch (658) into rear carrier (661).
4. Roller clutch race (657) with splines facing up.
5. Tanged thrust washer (662). Use petrolatum to retain in position.
6. Rear carrier assembly (661) into the rear internal gear (664).

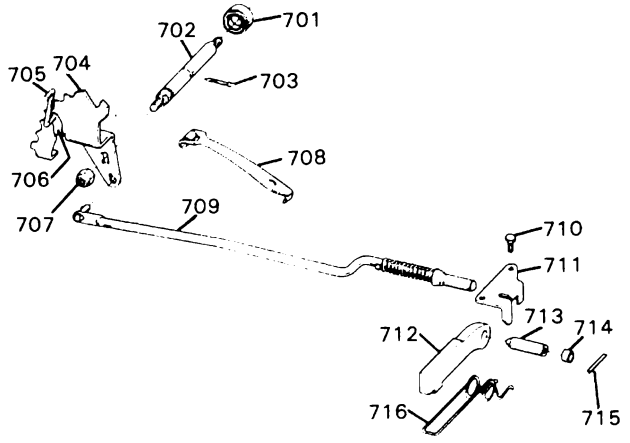

ILL. NO.	DESCRIPTION
701	SEAL, MANUAL SHAFT
702	SHAFT, MANUAL
703	PIN, RETAINING (MANUAL SHAFT TO CASE)
704	LEVER, INSIDE DETENT
705	LINK, INSIDE DETENT (LEVER TO VALVE)
706	CLIP, LINK TO DETENT LEVER
707	NUT, HEX
708	MANUAL DETENT ROLLER & SPRING ASSEMBLY
709	ROD ASSEMBLY, PARKING LOCK
710	BOLT, PARK LOCK BRACKET TO CASE (M8 X 1.25 X 20)
711	BRACKET, PARKING LOCK
712	PAWL, PARKING LOCK
713	SHAFT, PARKING LOCK PAWL
714	PLUG, STEEL CUP (.38 DIAMETER)
715	PIN, SLOTTED SPRING
716	SPRING, PARKING PAWL RETURN

HH0062200-4R-R1

Figure 41 Manual Shaft and Detent Lever Assemblies

Assemble (Figures 47 and 48)

Tools Required

J-25013 Output Shaft and Rear Unit Support Fixture

J-29332 Output Support Fixture

1. Install J-25013 and J-29332 as shown.
2. Output shaft assembly (665) into case(12).
3. Align parking pawl (712) and parking pawl lugs.
4. Use J-29332 to align internal gear parking lugs flush with the parking pawl (712).

Lo and Reverse Clutch Housing

Disassemble (Figure 49)

1. Compress Lo and reverse clutch spring retainer (652).
   Remove snap ring (653) and retainer (652).
2. Waved spring (651).
3. Lo and reverse clutch piston (649).
4. Inner and outer piston seals (648).

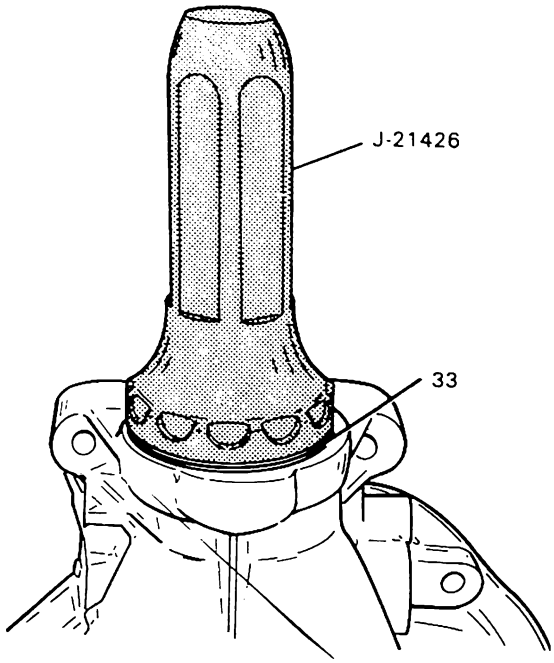

ILL. NO.	DESCRIPTION
33	SEAL ASSEMBLY, REAR OIL

HH0065200-4R

Figure 42 Installing Rear Output Seal

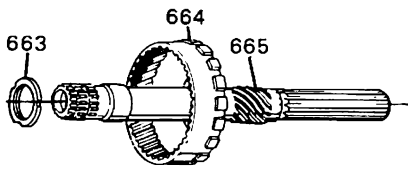

ILL. NO.	DESCRIPTION
663	BEARING ASSEMBLY, ROLLER THRUST (SUN/INT.)
664	GEAR, REAR INTERNAL
665	SHAFT, OUTPUT

HH0066200-4R

Figure 43 Rear Internal Gear and Output Shaft Assembly

5. Clutch apply ring (650).

Inspect

- Lo and Reverse clutch housing for:
  - plugged or damaged feed hole
  - bushing for scoring or damage
  - worn or chipped clutch splines
- Clutch apply ring (650) for cracks or distortion
- Piston (649) for wear, cracks, or damage
- Spring retainer (652) for damage
- Clutch plates (626):
  - composition plates for tang damage, delamination, or wear
  - steel plates for tang damage, wear, or heat damage

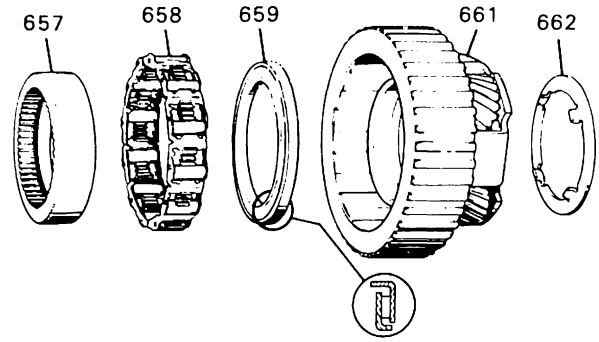

657 RACE, LO ROLLER CLUTCH
658 ROLLER ASSEMBLY, LO CLUTCH
659 BEARING, THRUST (REAR CAM/LO RACE)
661 CARRIER ASSEMBLY, REAR (COMPLETE)
662 WASHER, THRUST (REAR CARRIER/INTERNAL GEAR)

HH0067200-4R

Figure 44 Rear Carrier Assembly

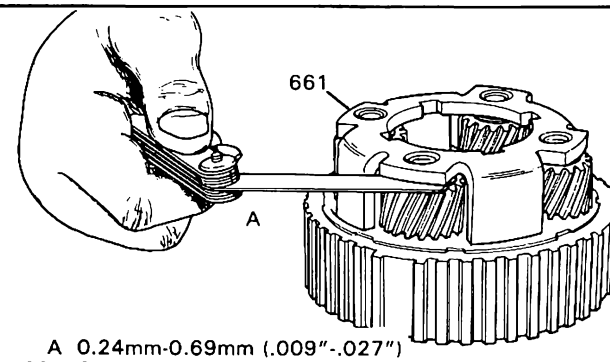

A 0.24mm-0.69mm (.009"-.027")
661 CARRIER ASSEMBLY, REAR (COMPLETE)

HH0142-2004R-R1

Figure 45 Checking Rear Carrier Pinion End Play

Assemble (Figures 50 and 51)

Tools Required
J-25011 Lo-Reverse Clutch Seal Protector
J-26744 Universal Seal Installer

1. Clutch apply ring (650).
2. Inner and outer piston seals (648).
   - seal lips face up. Lubricate seals with transmission fluid.
3. Install J-25011.
4. Lo and reverse piston (649). Use J-26744.
5. Remove J-25011.
6. Waved release spring (651).
7. Retainer (652), cup facing down.
8. Compress retainer (652) and install snap ring (653).

Assemble (Figure 52, 53 and 54)

Tools Required
J-28542 Reverse Clutch Housing Installer/Remover

1. Clutch plates (655).
   - start with steel, alternate with composition plates.
2. Waved steel plate (654).
3. Snap ring (647).

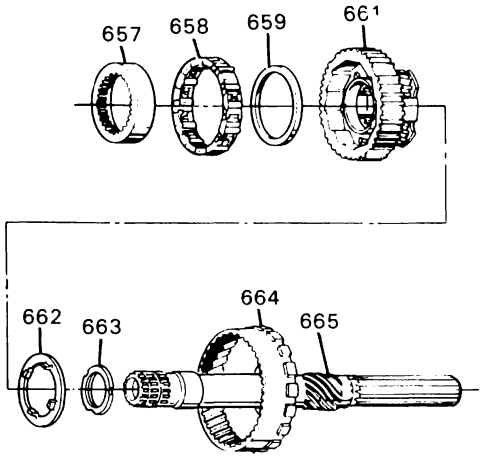

ILL. NO.	DESCRIPTION
657	RACE, LO ROLLER CLUTCH
658	ROLLER ASSEMBLY, LO CLUTCH
659	BEARING, THRUST (REAR CAM/LO RACE)
661	CARRIER ASSEMBLY, REAR (COMPLETE)
662	WASHER, THRUST (REAR CARRIER/INTERNAL GEAR)
663	BEARING ASM., ROLLER THRUST (SUN/INTERNAL)
664	GEAR, REAR INTERNAL
665	SHAFT, OUTPUT

HH0068200-4R

Figure 46 Installing Rear Carrier Assembly

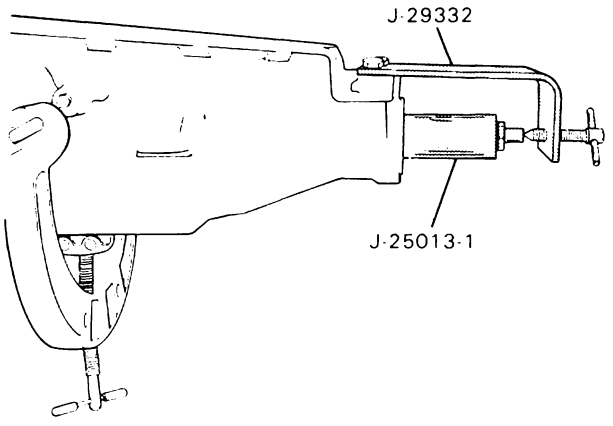

HH0039200-4R

Figure 47 Output Shaft Support Fixture

4. Lo and reverse clutch housing (646).
   - align clutch housing feed hole with case feed passage
5. If clutch housing does not seat past case snap ring:
   - remove J-28542.
   - install rear sun gear (642) and input drum (640)
   - rotate input drum (640) to align roller clutch and clutch hub splines
6. Snap ring (644). Bevel side up, ring opening opposite parking lock actuator rod (709).

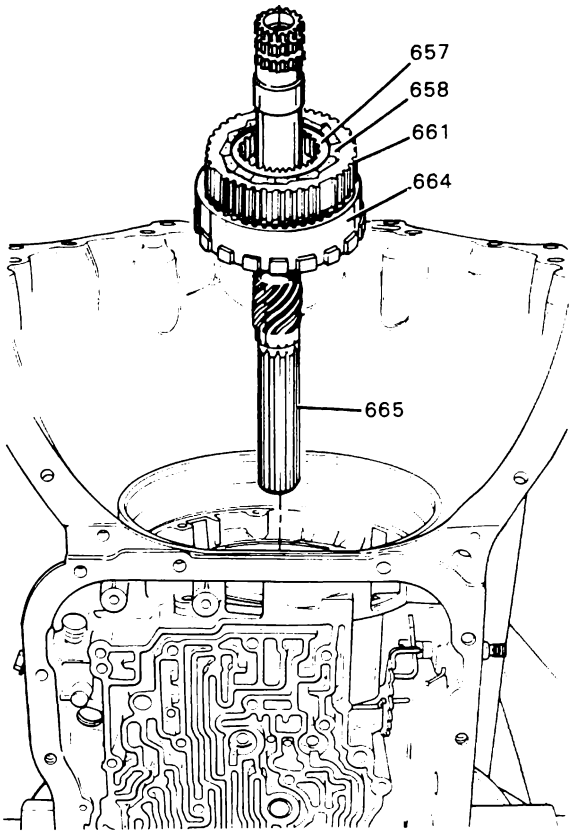

ILL. NO.	DESCRIPTION
657	RACE, LO ROLLER CLUTCH
658	ROLLER ASSEMBLY, LO CLUTCH
661	CARRIER ASSEMBLY, REAR (COMPLETE)
664	GEAR, REAR INTERNAL
665	SHAFT, OUTPUT
712	PAWL, PARKING LOCK

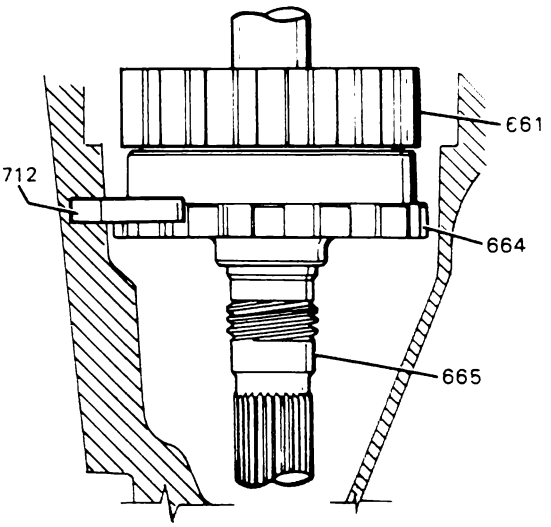

HH0151200-4R-R1

Figure 48 Installing Output Shaft

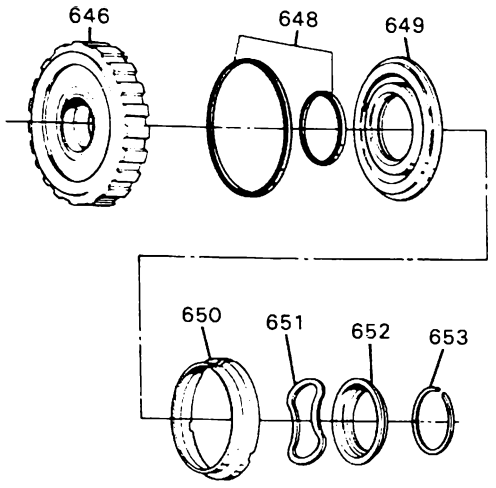

ILL. NO.	DESCRIPTION
646	HOUSING ASSEMBLY, LO & REVERSE CLUTCH
648	SEALS, LO & REVERSE PISTON (INNER/OUTER)
649	PISTON ASSEMBLY, LO & REVERSE CLUTCH
650	RING, CLUTCH APPLY (13.13mm)
651	SPRING, WAVE (REVERSE CLUTCH RELEASE)
652	RETAINER, LO & REVERSE CLUTCH SPRING
653	RING, SNAP (RETAINER/HOUSING)

HH0069200-4R

Figure 49 Lo and Reverse Clutch Housing Assembly

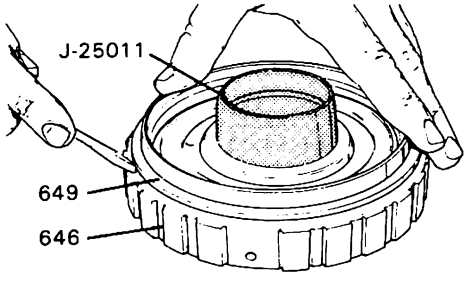

646 HOUSING ASSEMBLY, LO & REVERSE CLUTCH
649 PISTON ASSEMBLY, LO & REVERSE CLUTCH

HH0071200-4R

Figure 50 Installing - Lo and Reverse Clutch Piston

- It may be necessary to loosen J-29332.

7. Oil seal (46). Seat seal against clutch housing (646).

Front Gear Components

Disassemble (Figure 54)

1. Snap ring (639).
2. Rear sun gear (642) from input drum (640).

Inspect

- Rear sun gear for:
  - cracks
  - worn, cracked, or damaged splines
  - chipped, cracked, or damaged gear teeth
  - plugged lubrication passages

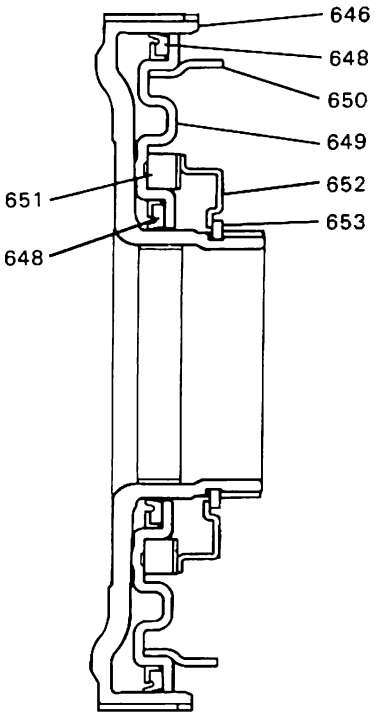

ILL. NO.	DESCRIPTION
646	HOUSING ASSEMBLY, LO & REVERSE CLUTCH
648	SEALS, LO & REVERSE PISTON (INNER/OUTER)
649	PISTON ASSEMBLY, LO & REVERSE CLUTCH
650	RING, CLUTCH APPLY (13.13mm)
651	SPRING, WAVE (REVERSE CLUTCH RELEASE)
652	RETAINER, LO & REVERSE CLUTCH SPRING
653	RING, SNAP (RETAINER/HOUSING)

HH0070200-4R

Figure 51 Cross Section - Lo and Reverse Clutch Housing

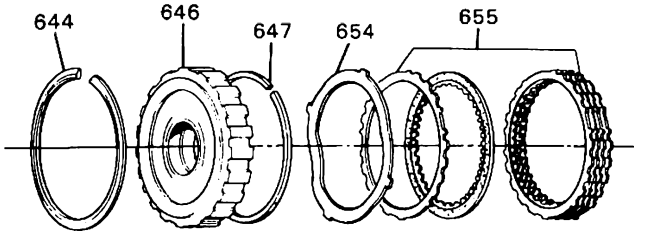

ILL. NO.	DESCRIPTION
644	RING, SNAP (HOUSING/CASE)
646	HOUSING ASSEMBLY, LO & REVERSE CLUTCH
647	SPACER, HOUSING TO CASE
654	PLATE, LO & REVERSE CLUTCH (WAVE)
655	PLATE, LO & REVERSE CLUTCH (1.969 MST)

HH0072200-4R

Figure 52 Lo and Reverse Clutch Assembly

- bushing for scoring, wear, or damage

- Input drum for:

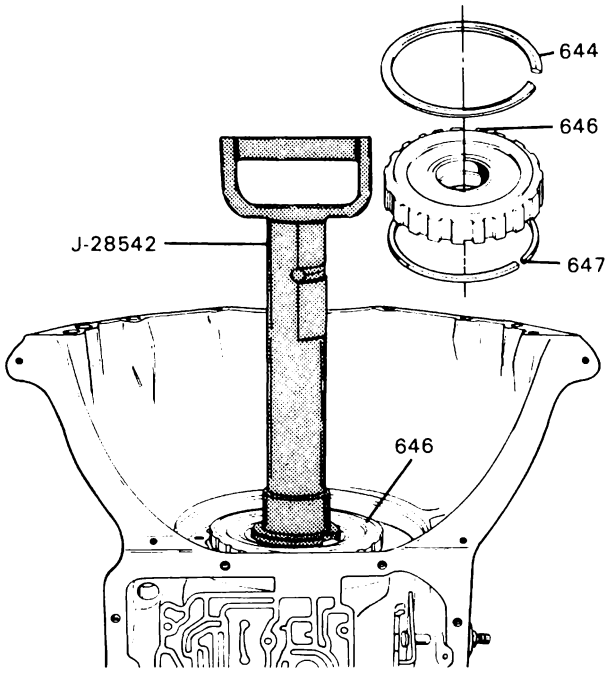

ILL. NO.	DESCRIPTION
644	RING, SNAP (HOUSING/CASE)
646	HOUSING ASSEMBLY, LO & REVERSE CLUTCH
647	SPACER, HOUSING TO CASE

HH0059200-4R

Figure 53 Installing Lo and Reverse Clutch

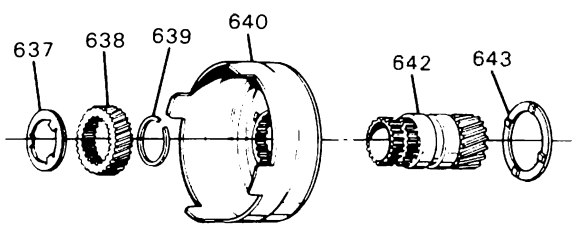

ILL. NO.	DESCRIPTION
637	BEARING ASSEMBLY, THRUST (FRT. CARRIER/SUN)
638	GEAR, FRONT SUN
639	RING, SNAP (INPUT DRUM/REAR SUN)
640	DRUM, INPUT
642	GEAR, REAR SUN
643	WASHER, THRUST (INPUT DRUM/HOUSING)

HH0073200-4R

Figure 54 Installing Front Sun Gear and Input Drum

- cracks or damage
- worn splines

- Thrust washer for scoring or damaged tangs

Assemble (Figure 54)

1. Rear sun gear (642) into input drum (640).
2. Snap ring (639).
3. Tanged thrust washer (643). Retain with petrolatum.
4. Input drum (640) and rear sun gear (642).

Front Sun Gear

Inspect (Figure 55)

- Front sun gear (638) for:
  - wear or damaged splines
  - chipped or cracked gear teeth
  - scored, pitted, or damaged bearing surface
- Thrust bearing for pitting or roughness

Assemble

1. Front sun gear (638).
   - identification groove against snap ring (639)
2. Thrust bearing (637). This thrust bearing requires only one race.
   - needle bearings against gear (638)

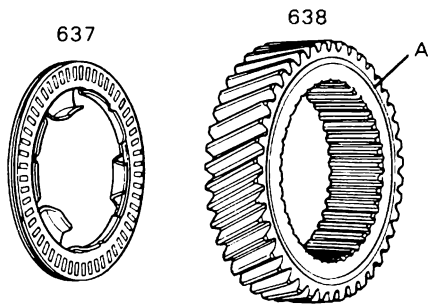

ILL. NO.	DESCRIPTION
A	IDENTIFICATION GROOVE
637	BEARING ASSEMBLY, THRUST (FRT. CARRIER/SUN)
638	GEAR, FRONT SUN

HH0074200-4R

Figure 55 Front Sun Gear

Front Carrier Assembly

Inspect (Figure 56)

- Pinions for chipped or cracked gears
- Bearings for roughness
- Thrust washer (635) for scoring, pitting, or damage

Measure

- Check pinion end play as shown. Clearance should be 0.24mm-0.69mm (.009"-.027").

Assemble (Figure 56)

1. Thrust bearing (635). Retain with petrolatum.
   - inside diameter against carrier
2. Front carrier (636).

Front Internal Gear

Inspect (Figure 57)

- Front internal gear (633) hub for:
  - worn or damaged splines
  - restricted lubrication passages

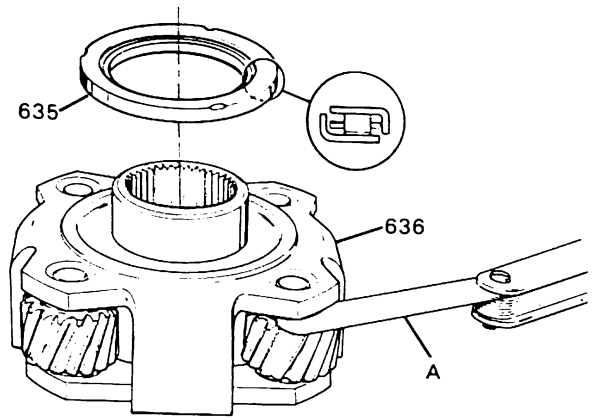

A 0.24mm-0.69mm (.009"-.027")
635 BEARING ASM., ROLLER (INTERNAL GEAR/CARRIER)
636 CARRIER ASSEMBLY, FRONT (COMPLETE)

HH0075-2004R-R1

Figure 56 Front Carrier Assembly

- Internal gear for cracks or chips
- Gear teeth for cracks or chips
- Bushing for scoring or damage
- Thrust washer (632) for scoring or damage
- Selective washer (631) for scoring, pitting, or damage

Assemble (Figure 57)

1. Internal gear (633).
2. Thrust washer (632).
3. Selective washer (631).
   - identification number faces up
4. Snap ring (630).
   - make sure snap ring is seated

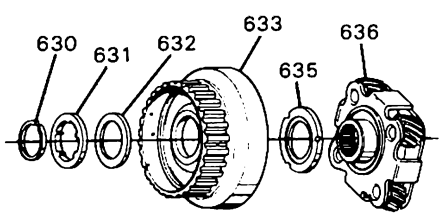

ILL. NO.	DESCRIPTION
630	RING, SNAP (OUTPUT SHAFT)
631	WASHER, THRUST (SELECTIVE REAR)
632	WASHER, THRUST (INTERNAL GEAR/REAR)
633	GEAR, FRONT INTERNAL
635	BEARING ASM., ROLLER (INTERNAL GEAR/CARRIER)
636	CARRIER ASSEMBLY, FRONT (COMPLETE)

HH0076200-4R

Figure 57 Front Internal Gear Assembly

Front Internal Gear to Outpur Shaft End Play Check

Measure (Figures 57, 58 and 59)

Tools Required

J-8001 Dial Indicator

J-7057 Plunger Extension

1. Loosen J-29332. Push output shaft (665) down.
2. Install clamp, J-7057, and J-8001 as shown.
3. Position J-7057 against output shaft (665).
   - Zero dial indicator
4. Turn adjusting screw until scribe/white line on J-25013 begins to disappear.
   - Read dial indicator
   - End play should be 0.10mm-0.64mm (.004"-.025")
5. If end play is not within specifications, refer to chart to select proper selective washer (631).
6. Remove J-8001, J-7057, and clamp.
7. Loosen J-25013.

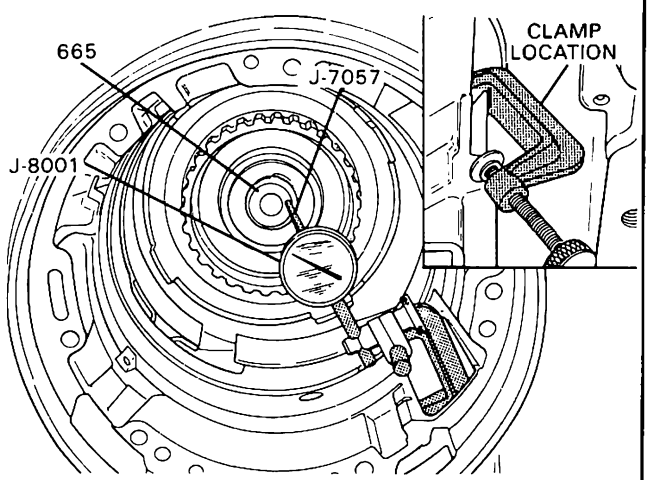

665 SHAFT, OUTPUT

HH0079200-4R

Figure 58 Rear Selective Washer End Play Check

THICKNESS		IDENTIFICATION NUMBER AND/OR COLOR
2.90-3.01mm	(0.114"-0.119")	1 - ORANGE
3.08-3.19mm	(0.121"-0.126")	2 - WHITE
3.26-3.37mm	(0.128"-0.133")	3 - YELLOW
3.44-3.55mm	(0.135"-0.140")	4 - BLUE
3.62-3.73mm	(0.143"-0.147")	5 - RED
3.80-3.91mm	(0.150"-0.154")	6 - BROWN
3.98-4.09mm	(0.157"-0.161")	7 - GREEN
4.16-4.27mm	(0.164"-0.168")	8 - BLACK
4.34-4.45mm	(0.171"-0.175")	9 - PURPLE

HH0056200-4R

Figure 59 Rear Unit End Play Washer Thickness Chart

Direct Clutch Assembly

Disassemble (Figure 60 and 61)

Tools Required

J-23327 Clutch Spring Compressor

1. Snap ring (615).
2. Clutch backing plate (614).
3. Direct clutch plates (613).
   - Keep separate from forward clutch plates.
4. Compress retainer and spring assembly (611). Remove snap ring (612).

5. Remove J-23327.

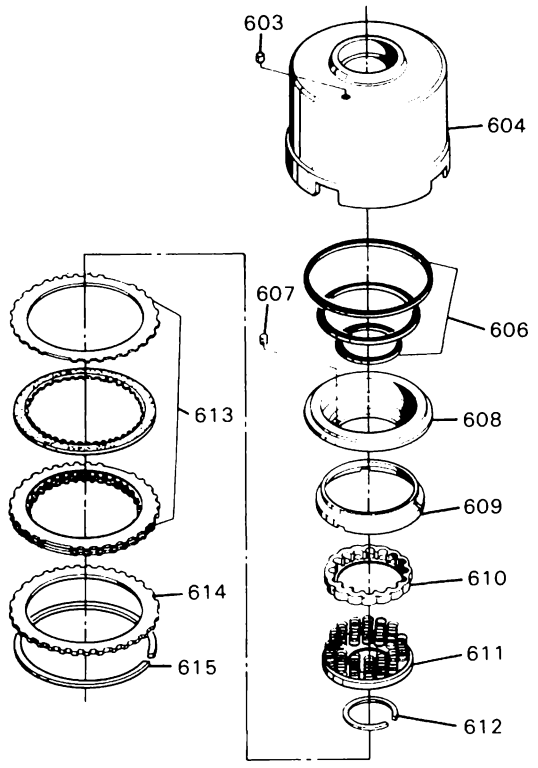

603 RETAINER & BALL ASSEMBLY, CHECK VALVE
604 HOUSING & DRUM ASSEMBLY, DIRECT CLUTCH
606 SEALS, DIRECT CLUTCH PISTON
607 RETAINER & BALL ASSEMBLY, CHECK VALVE
608 PISTON ASSEMBLY, DIRECT CLUTCH
609 RING, CLUTCH APPLY (DIRECT)
610 GUIDE, RELEASE SPRING
611 RETAINER & SPRING ASSEMBLY, DIRECT CLUTCH
612 RING, SNAP (SPRING RETAINER)
613 PLATE ASSEMBLY, DIRECT CLUTCH
614 PLATE, CLUTCH BACKING
615 RING, SNAP (DIRECT CLUTCH HOUSING)

HH0080200-4R

Figure 60 Direct Clutch Housing and Drum Assembly

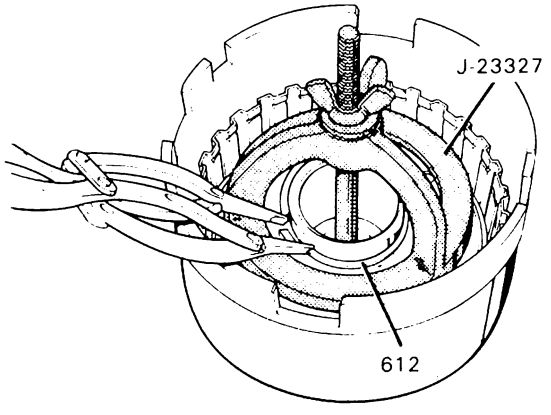

612 RING, SNAP (SPRING RETAINER)

HH0081200-4R

Figure 61 Installing J-23327

Disassemble (Figure 60)

1. Retainer and spring assembly (611).
2. Spring guide (610).
3. Direct piston (608).
4. Inner and outer piston seal rings (606).

Important

Do not remove clutch apply ring (609) unless damaged or clutch piston is being replaced.

Inspect

- Direct clutch housing (604) for:
  - cracks
  - worn or damaged clutch lugs
  - snap ring grooves for damage
  - bushing for scoring or damage
- Clutch backing plate (614)
  - scoring or heat damage
- Clutch plates (613)
  - composition plates for tang damage, delamination, or wear
  - steel plates for tang damage, wear, or heat damage
- Retainer and spring assembly (611)
  - collapsed springs
  - distorted or collapsed retainer
- Spring guide for damage
- Piston (608)
  - cracks or damage
- Piston and housing check valves (603 and 607)
  - the ball must move freely
  - leak test check ball with solvent

Remove or Disconnect

Tools Required
9.5mm (3/8") Diameter Rod or Drift

1. Tap out check valve assembly (603 and 607).

Install or Connect (Figure 62)

1. Using same tools, tap in check valve (603 and 607) until seated.

Assemble (Figures 60 and 63)

Tools Required
J-25010 Seal Protector

1. Clutch apply ring (609), if necessary.
2. Inner and outer piston seals (606).
   - lips face away from apply ring side.
3. Center seal (606).
4. Lubricate piston seals with transmission fluid.
5. Install J-25010.

NOTICE: Use care when installing piston seals. Snap ring groove could cut outer piston seal.

Assemble (Figures 60, 61, 64, 65)

Tools Required

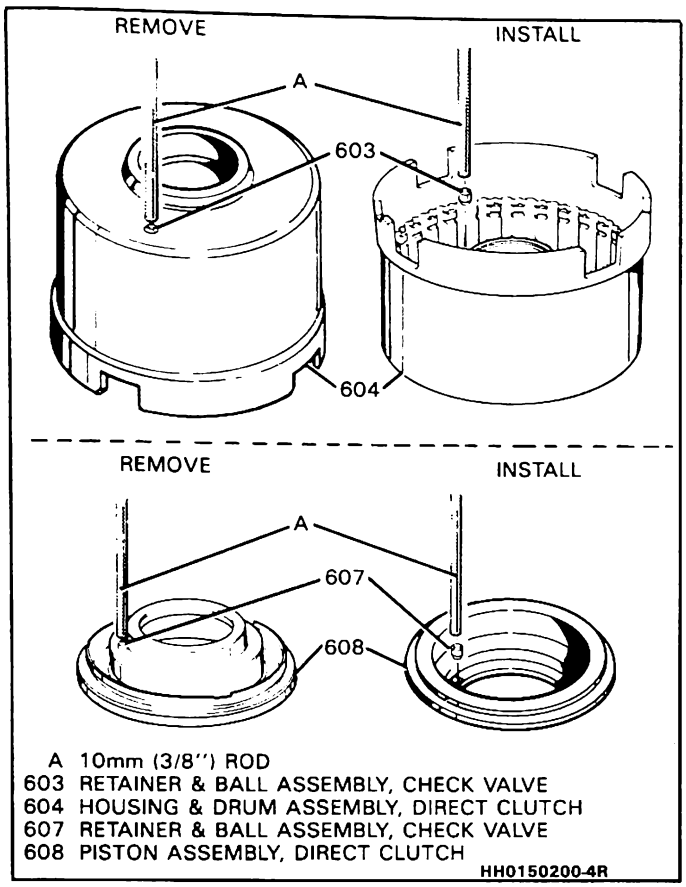

Figure 62 Removing and Installing a Check Valve Retainer and Ball Assembly

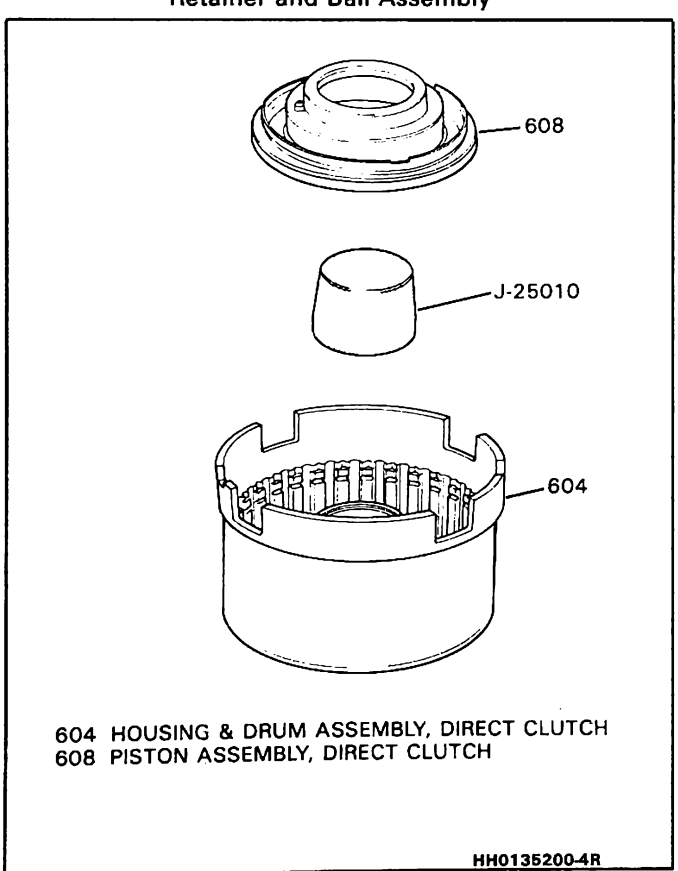

Figure 63 Installing Direct Clutch Piston Seals

J-26744-A Universal Seal Installer
J-23327 Clutch Spring Compressor

1. Piston (608). Use J-26744-A to compress lip of seal while pushing down on piston.
2. Remove J-25010.
3. Spring guide (610).
   - Align omitted rib with check valve (607).
4. Retainer and spring assembly (611).
   - Do not let retainer catch on snap ring groove.
5. Compress retainer (611). Use J-23327.
6. Snap ring (612).
7. Remove J-23327.

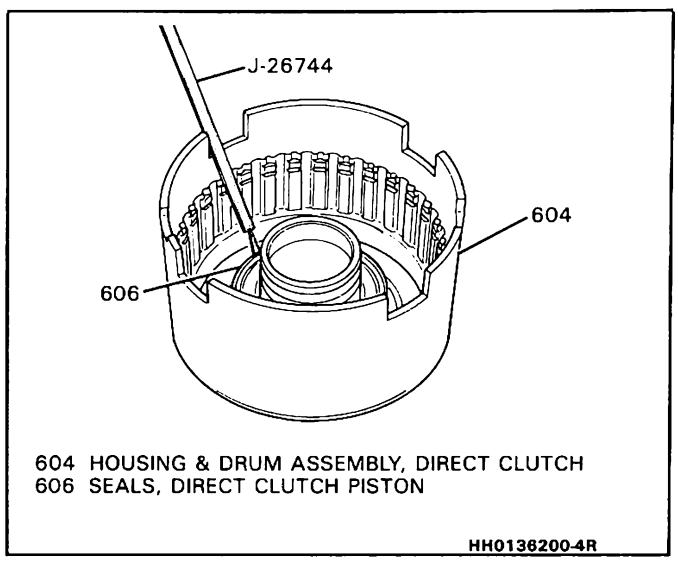

Figure 64 Installing Piston Seals

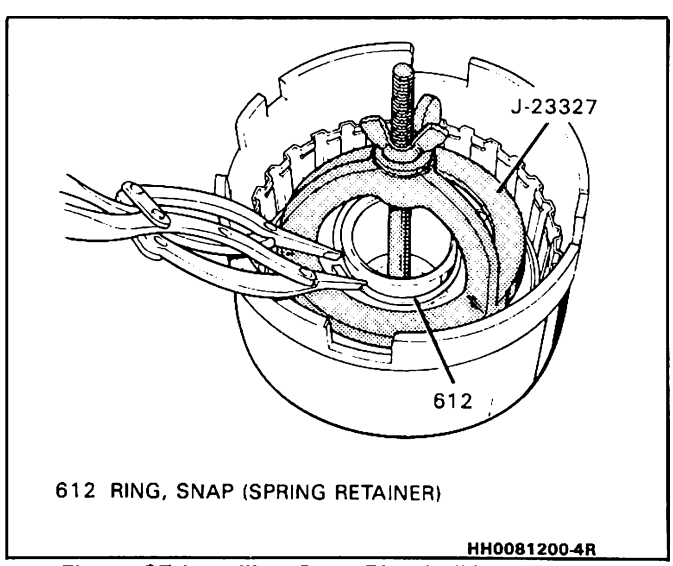

Figure 65 Installing Snap Ring in Direct Clutch Housing

Assemble (Figures 66 and 67)

1. Clutch plates (613).
   - Soak in transmission fluid
   - start with steel and alternate with composition
2. Backing plate (614).
   - micro finish down

3. Snap ring (615).
   - composition plates must rotate freely.

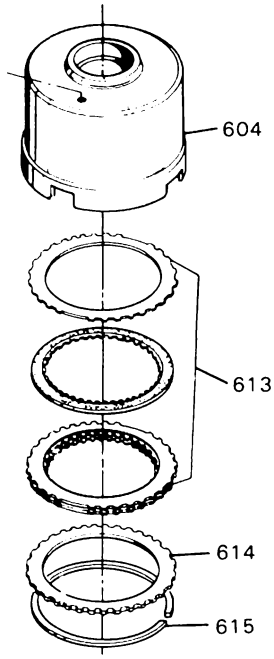

604 HOUSING & DRUM ASSEMBLY, DIRECT CLUTCH
613 PLATE ASSEMBLY, DIRECT CLUTCH
614 PLATE, CLUTCH BACKING
615 RING, SNAP (DIRECT CLUTCH HOUSING)

HH0084200-4R

Figure 66 Direct Clutch Housing and Drum Assembly

Forward Clutch Assembly

Disassemble (Figure 68)

1. Position forward clutch (618) as shown.
2. Snap ring (628).
3. Backing plate (627).
4. Waved plate (666)
5. Clutch plates (626).
6. Waved plate (666).

Disassemble (Figures 68 and 69)

Tools Required
J-23327 Clutch Spring Compressor
J-25018 Forward Clutch Adapter
J-25024 Forward Clutch Spring Compressor

1. Install J-23327, J-25018, and J-25024.
2. Compress retainer (624).
3. Snap ring (625).
4. Retainer and spring assembly (624).
5. Forward clutch piston (622).
6. Inner and outer piston seals (621).

Inspect

- Forward clutch shaft teflon seals (616)
  - Do not remove unless replacing
- Retainer and spring assembly (611)

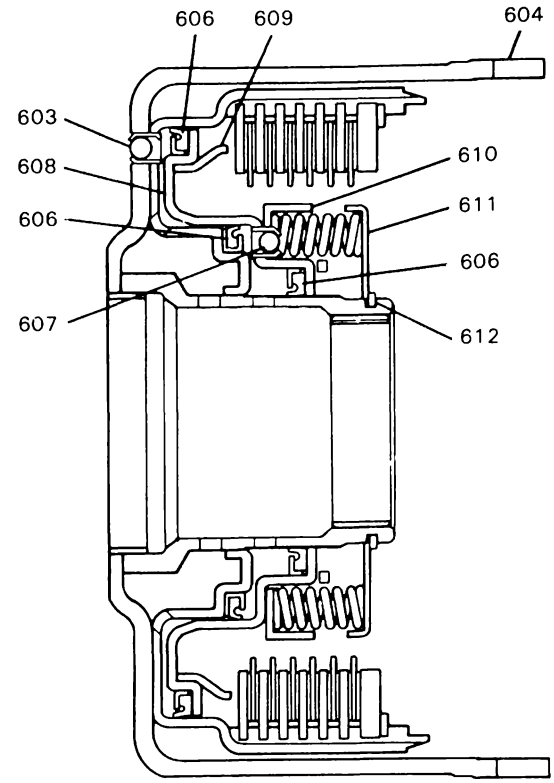

603 RETAINER & BALL ASSEMBLY, CHECK VALVE
604 HOUSING & DRUM ASSEMBLY, DIRECT CLUTCH
606 SEALS, DIRECT CLUTCH PISTON
607 RETAINER & BALL ASSEMBLY, CHECK VALVE
608 PISTON ASSEMBLY, DIRECT CLUTCH
609 RING, CLUTCH APPLY (DIRECT)
610 GUIDE, RELEASE SPRING
611 RETAINER & SPRING ASSEMBLY, DIRECT CLUTCH
612 RING, SNAP (SPRING RETAINER)

HH0083200-4R

Figure 67 Cross-Section, Direct Clutch Assembly

  - collapsed springs
  - distorted retainer
- Piston (622)
  - cracks or damage
- Forward clutch housing (618)
  - worn or damaged clutch lugs
  - snap ring grooves for damage
- Forward clutch shaft
  - restricted oil passages
  - journals at both ends for damage
- Cup plug (620) for damage

Remove or Disconnect (Figure 70)

Tools Required
#3 Screw Extractor (grind to fit)

1. Cup plug (620). Use #3 screw extractor.

Install or Connect (Figure 70)

1. Seat cup plug (620) to 1.0mm (.039") below shaft.

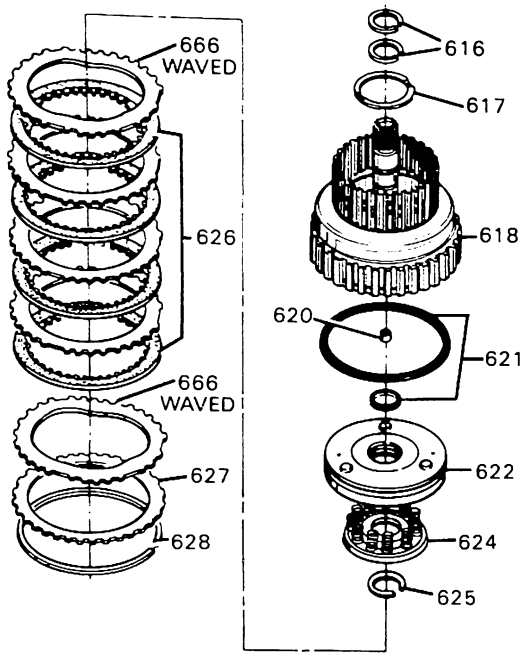

ILL. NO.	DESCRIPTION
616	SEALS, RING (FORWARD CLUTCH SHAFT) TEF
617	WASHER, THRUST (DIRECT/FORWARD CLUTCH)
618	HOUSING ASSEMBLY, FORWARD CLUTCH
620	PLUG, CUP (4.8 DIAMETER)
621	SEALS, FORWARD CLUTCH PISTON (PACKAGE)
622	PISTON ASSEMBLY, FORWARD CLUTCH
624	RETAINER & SPRING ASSEMBLY, FORWARD
625	RING, SNAP (FORWARD SPRING RETAINER)
626	PLATE, FORWARD CLUTCH (FLAT)
627	PLATE, CLUTCH BACKING
628	RING, SNAP (FORWARD CLUTCH HOUSING)
666	PLATE, CLUTCH 1.585 (WAVED)

HH0086-2004R-1

Figure 68 Forward Clutch Housing Assembly

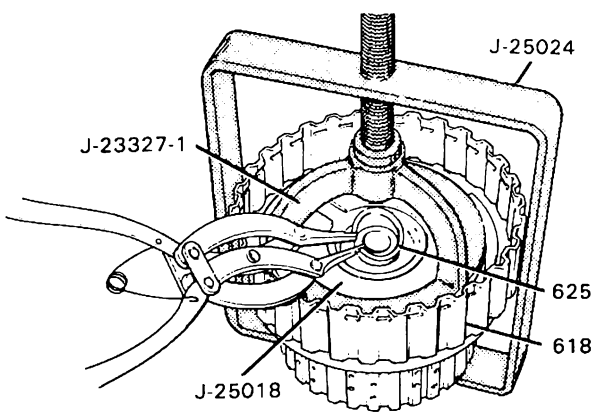

618 HOUSING ASSEMBLY, FORWARD CLUTCH
625 RING, SNAP (FORWARD SPRING RETAINER)

HH0085200-4R

Figure 69 Removing Forward Clutch Snap Ring

Assemble (Figure 72)

Tools Required

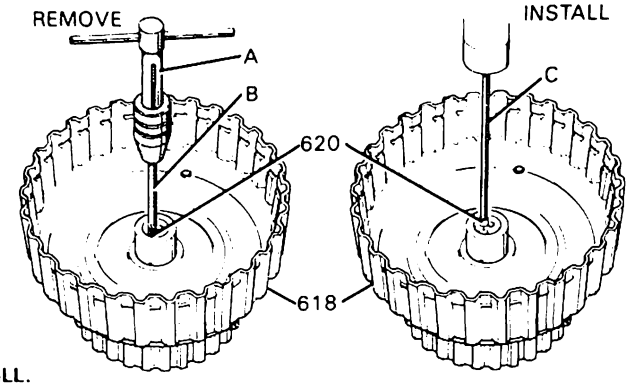

ILL. NO.	DESCRIPTION
A	"T" HANDLE TAP WRENCH
B	#3 SCREW EXTRACTOR
C	ROD
618	HOUSING ASSEMBLY, FORWARD CLUTCH
620	PLUG, CUP (4.8 DIAMETER)

HH0144200-4R

Figure 70 Removing and Installing Cup Plug

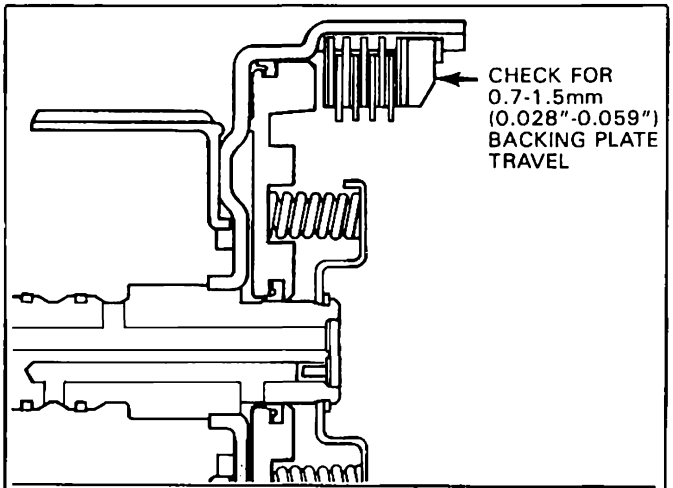

PLATE THICKNESS	IDENTIFICATION
3.70mm - 4.15mm (.146" - .163")	7
4.25mm - 4.70mm (.167" - .185")	6
4.80mm - 5.25mm (.189" - .207")	X
5.35mm - 5.80mm (.211" - .228")	5
5.90mm - 6.35mm (.232" - .250")	4

JH0155-2004R-R1

Figure 71 Forward Clutch Backing Plate Selection

J-26744 Universal Seal Installer

1. Inner and outer piston seals (621).
   - lips face away from clutch apply ring
2. Lubricate seal with transmission fluid.
3. Piston (622). Use J-26744 while pushing down on piston.
4. Retainer and spring assembly (624).

Assemble (Figures 68, 69 and 73)

Tools Required

J-23327 Clutch Spring Compressor

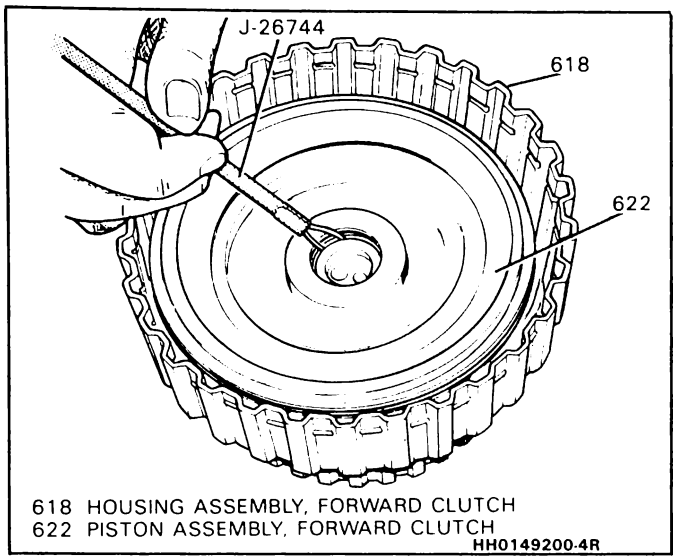

Figure 72 Installing Seals Onto Forward Clutch Piston

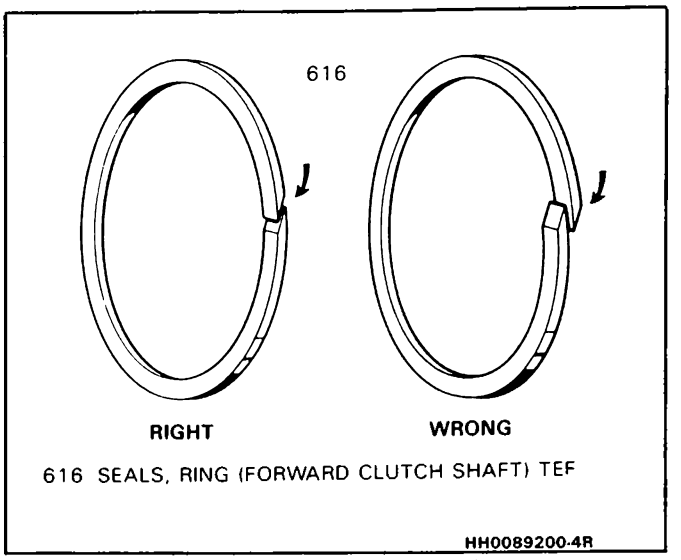

Figure 73 Installing Scarf Cut Seals

J-25018 Forward Clutch Adapter
J-25024 Forward Clutch Spring Compressor

1. Install J-23327, J-25018,and J-25024.
2. Compress retainer (624).
   - do not let retainer catch on snap ring groove
3. Remove J-23327, J-25018, and J-25024.
4. Waved steel plate (666).
5. Clutch plates (626)
   - soak in transmission fluid
   - start with composition plate and alternate with steel plates
6. Waved steel plate (666).
7. Backing plate (627).
8. Snap ring (628)
   - composition plates must rotate freely.

Measure (Figure 71)

- Snap ring (628) to backing plate (627). Apply an evenly distributed load in the direction indicated in Figure 71 to remove slack from the clutch assembly. Use 20 lbs. (9 kg) of pressure against the backing plate-excessive pressure will cause an inaccurate measurement. With the clutch assembly compressed, use a feeler gage to measure the distance between the backing plate and snap ring. Correct backing plate travel is 0. 7-1.5mm (0.028"-0.059").

Assemble (Figure 73)

1. Forward clutch shaft seal rings (616), if necessary.
   - make sure cut ends are assembled as shown
   - retain with petrolatum

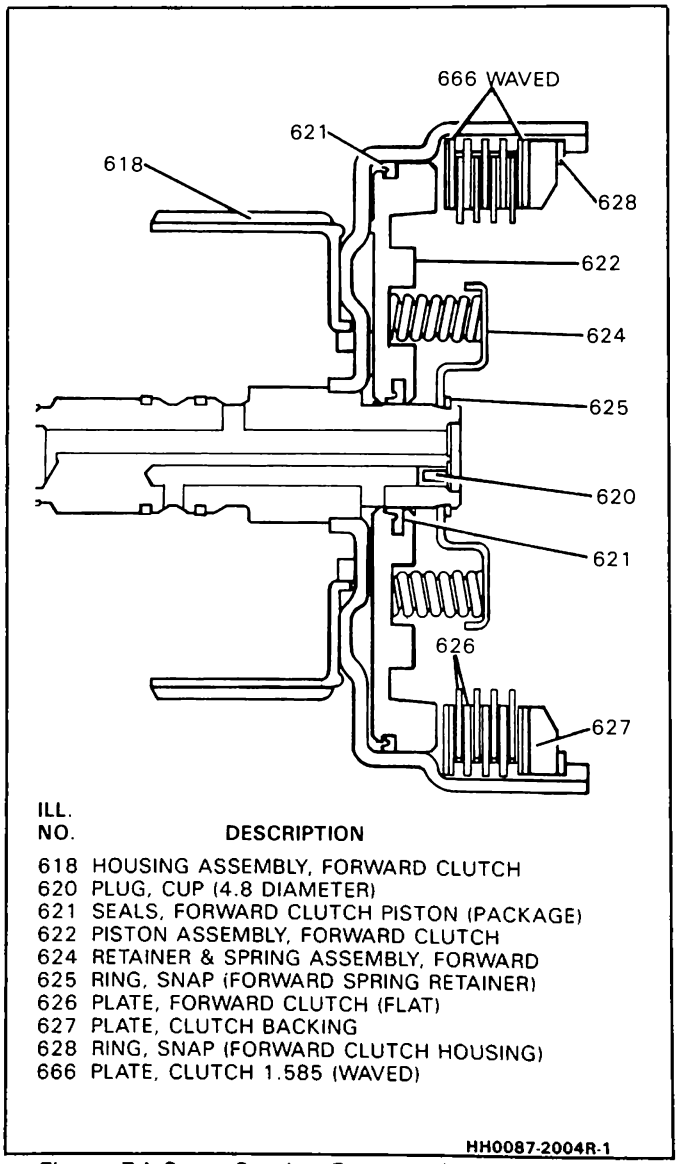

Figure 74 Cross-Section Forward Clutch Housing

Intermediate Band

Inspect (Figure 75)

- Intermediate band (601) for:
  - burning
  - flaking
  - cracks

Install or Connect (Figure 75)

1. Intermediate band (601).
2. Band anchor pin (47).

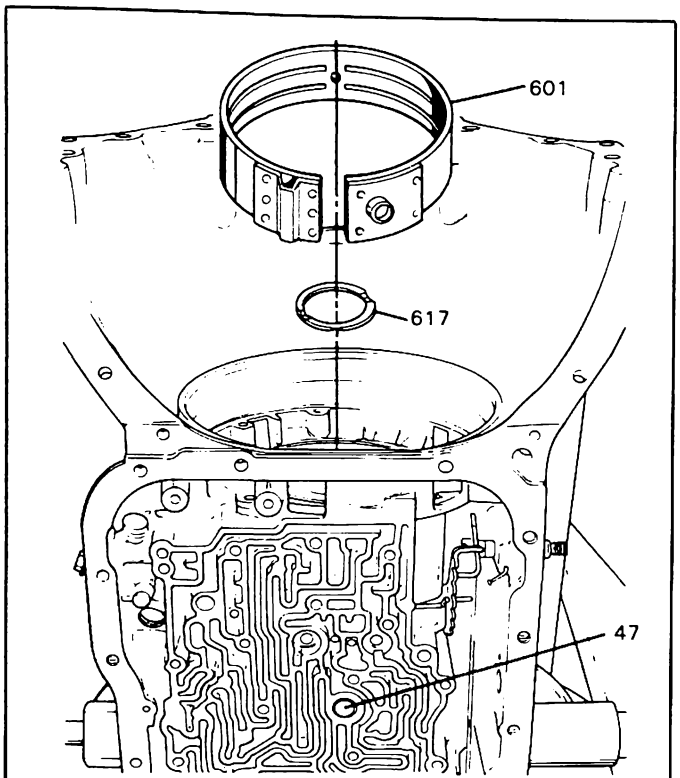

47 PIN, BAND ANCHOR
601 BAND ASSEMBLY, INTERMEDIATE
617 WASHER, THRUST

HH0088200-4R

Figure 75 Installing Intermediate Band

Forward and Direct Clutch

Install or Connect (Figures 76, 77, 78)

Tools Required

J-29337 Forward and Direct Clutch and End Play Checking Fixture

1. Align clutch plates.
2. Position direct clutch housing (604) as shown.
3. Forward clutch (618).
   - when seated, the forward clutch housing (618) protrude approximately 15.8mm (5/8") from direct clutch housing (604).
4. Preventing separation, position direct and forward clutch assembly (604/618) with forward clutch shaft facing up.
5. Install J-29337.
6. Direct and forward clutch assembly (604/618).
   - direct clutch housing will be approximately 105mm (4-1/8") from pump face surface of case when seated properly
7. Remove J-29337.

Center Support

Disassemble (Figure 79)

1. Fourth clutch inner and outer seal rings (535).

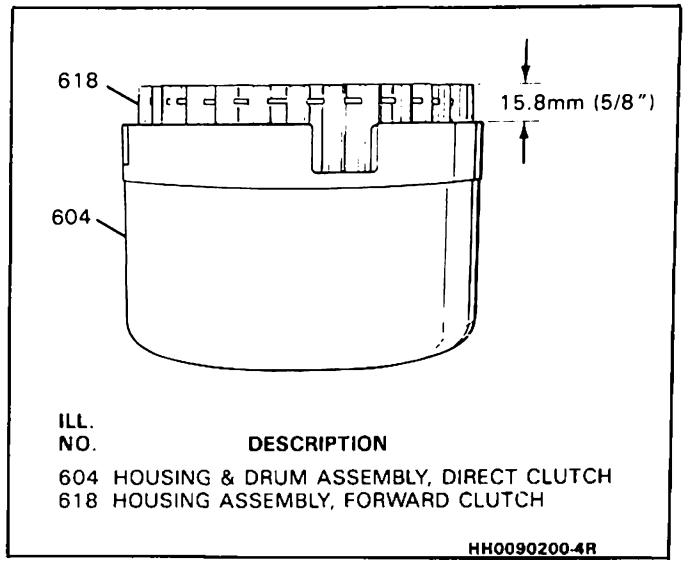

ILL. NO. DESCRIPTION

604 HOUSING & DRUM ASSEMBLY, DIRECT CLUTCH
618 HOUSING ASSEMBLY, FORWARD CLUTCH

HH0090200-4R

Figure 76 Measuring Forward Clutch Housing

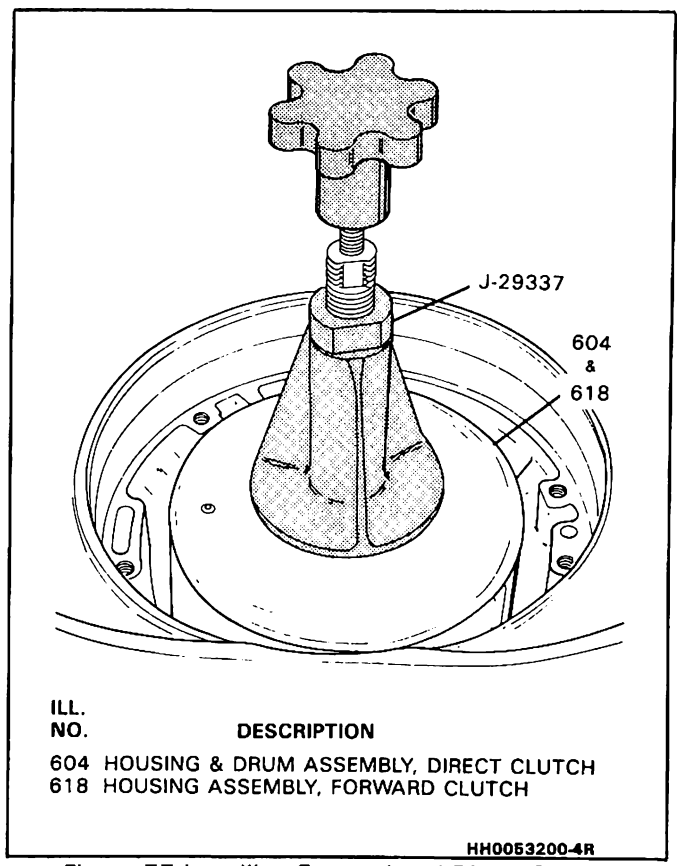

ILL. NO. DESCRIPTION

604 HOUSING & DRUM ASSEMBLY, DIRECT CLUTCH
618 HOUSING ASSEMBLY, FORWARD CLUTCH

HH0053200-4R

Figure 77 Installing Forward and Direct Clutch Assemblies

2. (3) Oil seal rings (539).

Inspect

- Center support (537) for:
  - sharp edges
  - burrs
  - cracks
  - porosity
- Oil ring grooves for:
  - nicks or damage
- Piston seal surfaces for:

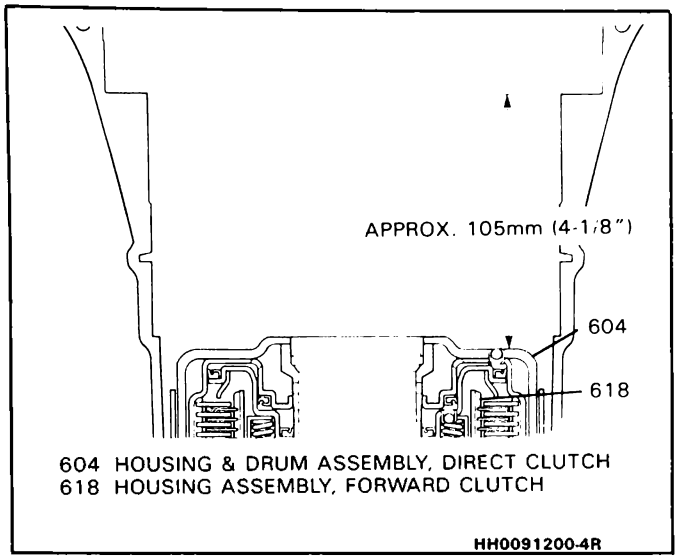

Figure 78 Installed Forward and Direct Clutch Assemblies

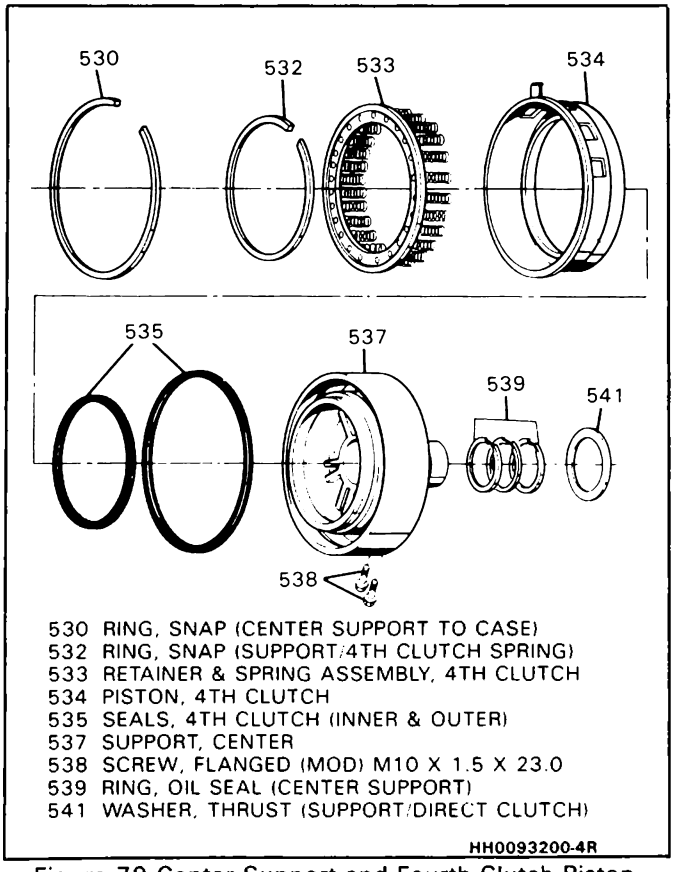

Figure 79 Center Support and Fourth Clutch Piston Assembly

- scratches
- nicks

- Air check all oil passages
- Bushing (540) for:
  - scoring
  - galling
  - wear

Assemble (Figures 79, 80, and 81)

1. (3) Oil seal rings (539).
   - apply petrolatum to rings
2. Fourth clutch inner and outer seal rings (535).
   - lips face down
3. Thrust washer (541).
   - retain with petrolatum
4. Center support (537).
   - align bolt holes
5. (2) Bolts (538).
   - do not tighten
6. Snap ring (530).
   - beveled side up
7. Torque bolts to 24 N·m (18 lbs.-ft.).

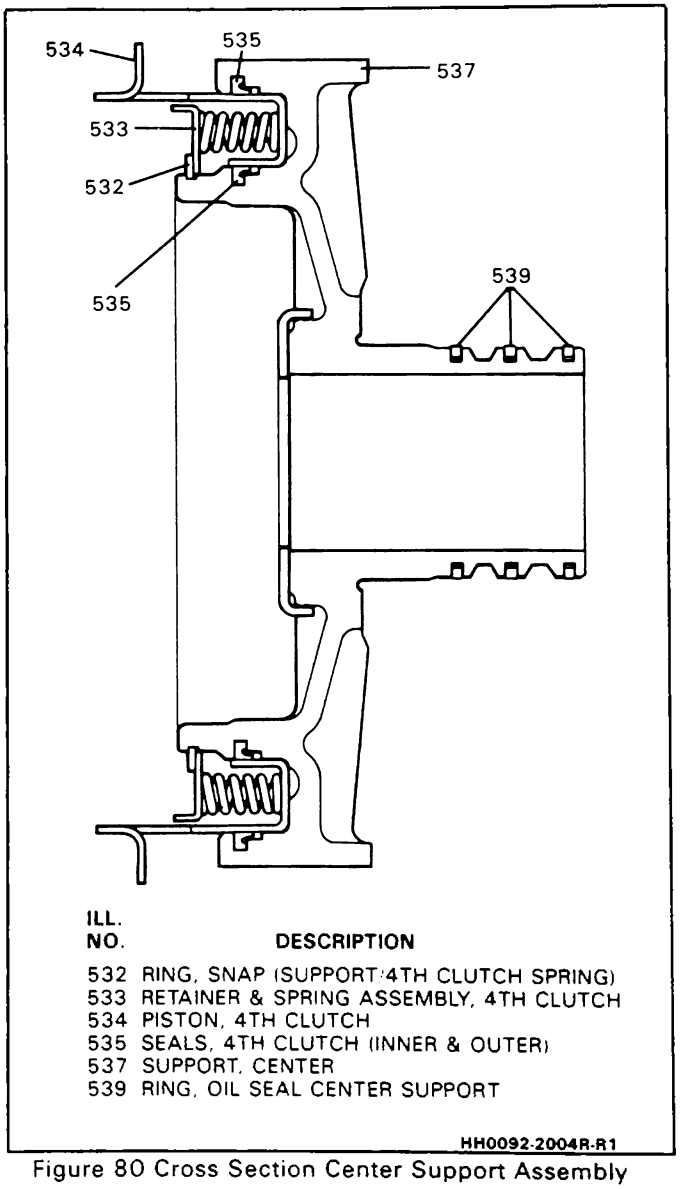

Figure 80 Cross Section Center Support Assembly

Forward Clutch Shaft End Play Check

Measure (Figures 82, 83 and 84)

Tools Required

J-8001 Dial Indicator

J-29337 Forward and Direct Clutch End Play Checking Device

J-25013 Rear Unit Support

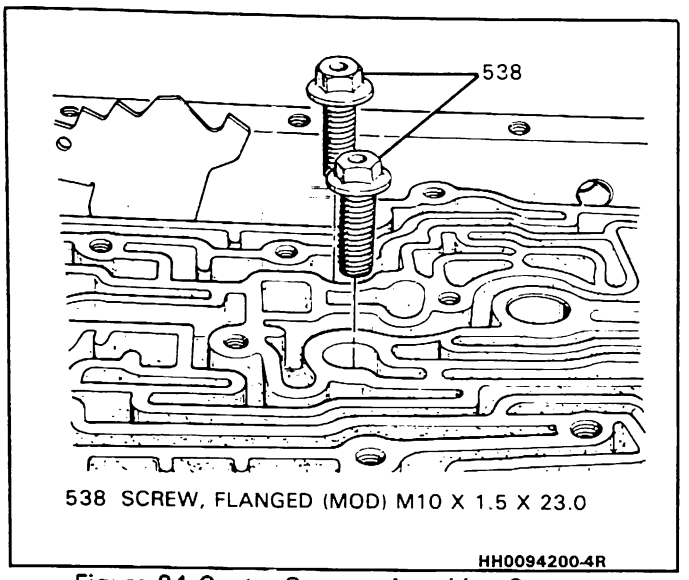

Figure 81 Center Support Attaching Screws

J-29332 Output Shaft Loading Fixture Adapter

1. Push forward clutch shaft (518) downward.
2. Install J-29337.
3. Install clamp and J-8001 as shown.
4. Turn J-29332 until white/scribed line on J-25013-1 begins to disappear.
5. Zero dial indicator.
6. Pull upward on J-29337.
   - Read dial indicator
   - End play should be 0.56mm-1.30mm (.022"-.051")
   - Selective washer controlling end play is located between the output shaft (665) and the forward clutch shaft.
   - If clearance is not within specifications, use chart to select proper selective washer (617).

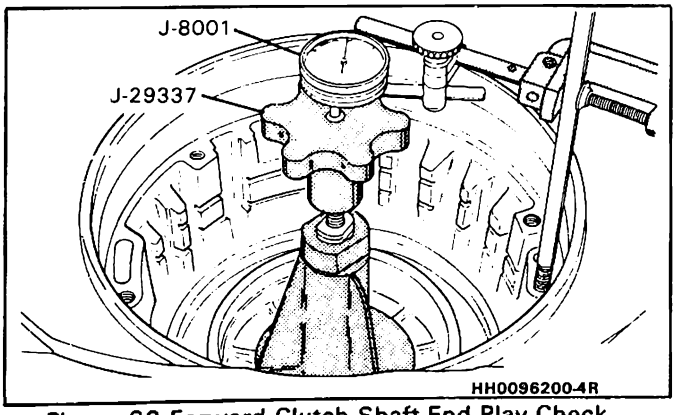

Figure 82 Forward Clutch Shaft End Play Check

Inspect (Figure 79)

- Snap ring (532) for damage.
- Fourth clutch piston (534) for:
  - cracks
  - damage
- Release springs and retainer (533) for:
  - distortion
  - collapsed springs

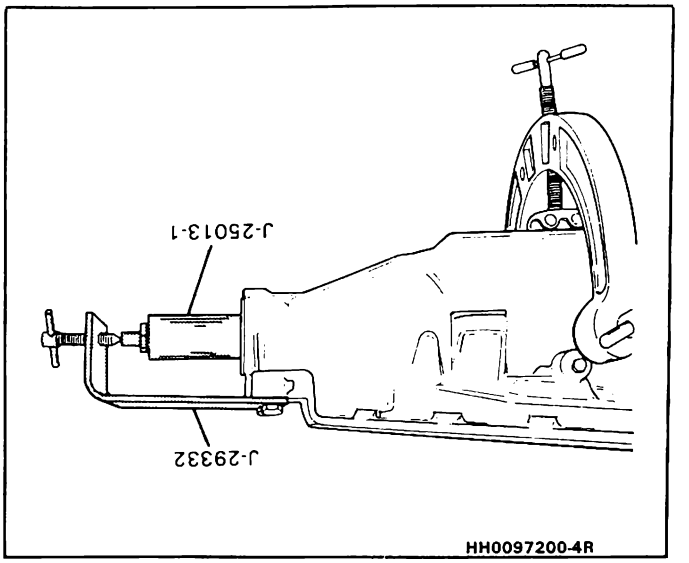

Figure 83 Installing Rear Unit Support Fixture

THICKNESS		IDENTIFICATION NUMBER AND/OR COLOR
1.66-1.77mm	(0.065"-0.070")	1 - –
1.79-1.90mm	(0.070"-0.075")	2 - –
1.92-2.03mm	(0.076"-0.080")	3 - BLACK
2.05-2.16mm	(0.081"-0.085")	4 - LIGHT GREEN
2.18-2.29mm	(0.086"-0.090")	5 - SCARLET
2.31-2.42mm	(0.091"-0.095")	6 - PURPLE
2.44-2.55mm	(0.096"-0.100")	7 - COCOA BROWN
2.57-2.68mm	(0.101"-0.106")	8 - ORANGE
2.70-2.81mm	(0.106"-0.111")	9 - YELLOW
2.83-2.94mm	(0.111"-0.116")	10 - LIGHT BLUE
2.96-3.07mm	(0.117"-0.121")	11 - –
3.09-3.20mm	(0.122"-0.126")	12 –
3.22-3.33mm	(0.127"-0.131")	13 - PINK
3.35-3.46mm	(0.132"-0.136")	14 - GREEN
3.48-3.59mm	(0.137"-0.141")	15 - GRAY

HH0095200-4R

Figure 84 Front Unit End Play Washer Thickness Chart

Assemble (Figure 85)

Tools Required

J-29334-2 Fourth Clutch Compressor and Center Support Remover

1. Fourth clutch piston (534).
   - align tang with case spline
2. Spring and retainer (533).
3. Install J-29334-2.
4. Snap ring (532).
5. Remove J-29334-2.

Overdrive Internal Gear

Inspect (Figure 86)

- Thrust washer (531) for:
  - tang damage
  - scoring
- Internal gear (529) for:
  - chipped or cracked teeth
  - worn splines

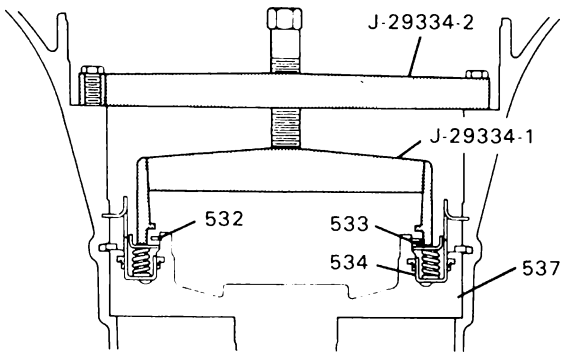

532 RING, SNAP (SUPPORT/4TH CLUTCH SPRING)
533 RETAINER & SPRING ASSEMBLY, 4TH CLUTCH
534 PISTON, 4TH CLUTCH
537 SUPPORT, CENTER

HH0098200-4R

Figure 85 Installing Fourth Clutch Snap Ring

- worn or damaged bearing surface
- Thrust bearing (528) for:
  - pitting or roughness

Assemble

1. Thrust washer (531).
   - tangs face down
2. Internal gear (529).
3. Thrust bearing (528).
   - large diameter against internal gear

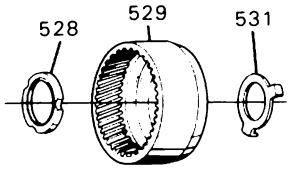

ILL. NO.	DESCRIPTION
528	BEARING ASM., THRUST (CARRIER/INTERNAL GEAR)
529	GEAR, OVERDRIVE INTERNAL
531	WASHER, THRUST (INTERNAL GEAR/SUPPORT)

HH0099200-4R

Figure 86 Overdrive Internal Gear

Overrun Clutch and Overdrive Carrier Assembly

Disassemble (Figure 87)

1. Snap ring (527).
2. Turbine shaft (503).
3. Overdrive assembly (524).
4. Overdrive sun gear (521).
5. Snap ring (515).
6. Overrun clutch backing plate (514).
7. Clutch plates (513).

Disassemble (Figure 87)

1. Snap ring (520).
2. Overdrive roller clutch cam assembly (518/519).
3. Roller assembly (518).
4. Retainer (517) and waved spring (516).
5. Overrun piston (511).
6. Inner and outer piston seals (512).

Inspect

- Clutch plates (513) :
  - composition plates for damaged tangs, delamination, or wear.
  - steel plates for damaged tangs, wear, or heat damage.
- Roller clutch cam (519) for:
  - damaged or missing rollers
  - damaged or missing energizing springs
- Retainer (517) for distortion or damage.
- Overrun clutch piston (511) for:
  - cracks
  - damage
- Overrun clutch housing (510) for:
  - cracks
  - open oil passages
  - damaged or worn snap ring grooves

Assemble (Figures 87, 88 and 89)

Tools Required
J-29335 Seal Protector
J-26744-A Universal Seal Installer

1. Inner and outer piston seals (512).
   - lips face away from clutch apply ring
   - lubricate with transmission fluid
2. Install J-29335.
3. Overrun clutch piston (511). Use J-26744-A while pushing down on piston.
4. Remove J-29335.
5. Waved spring (516).
6. Spring retainer (517)
   - cupped face down

Assemble (Figure 87 and 89)

1. Roller assembly (518) onto roller clutch cam (519).
   - roller assembly locator tangs must set on clutch cam (519)
2. Roller clutch assembly (518/519).
3. Compress retainer (517).
   - install snap ring (520)
4. Clutch plates (513).
   - soak in transmission fluid
   - start with steel plates and alternate with composition plate
5. Backing plate (514).
   - chamfered side up
6. Snap ring (515).
   - composition plates must rotate freely

Overdrive Carrier

Disassemble (Figure 90)

1. Snap ring (526).

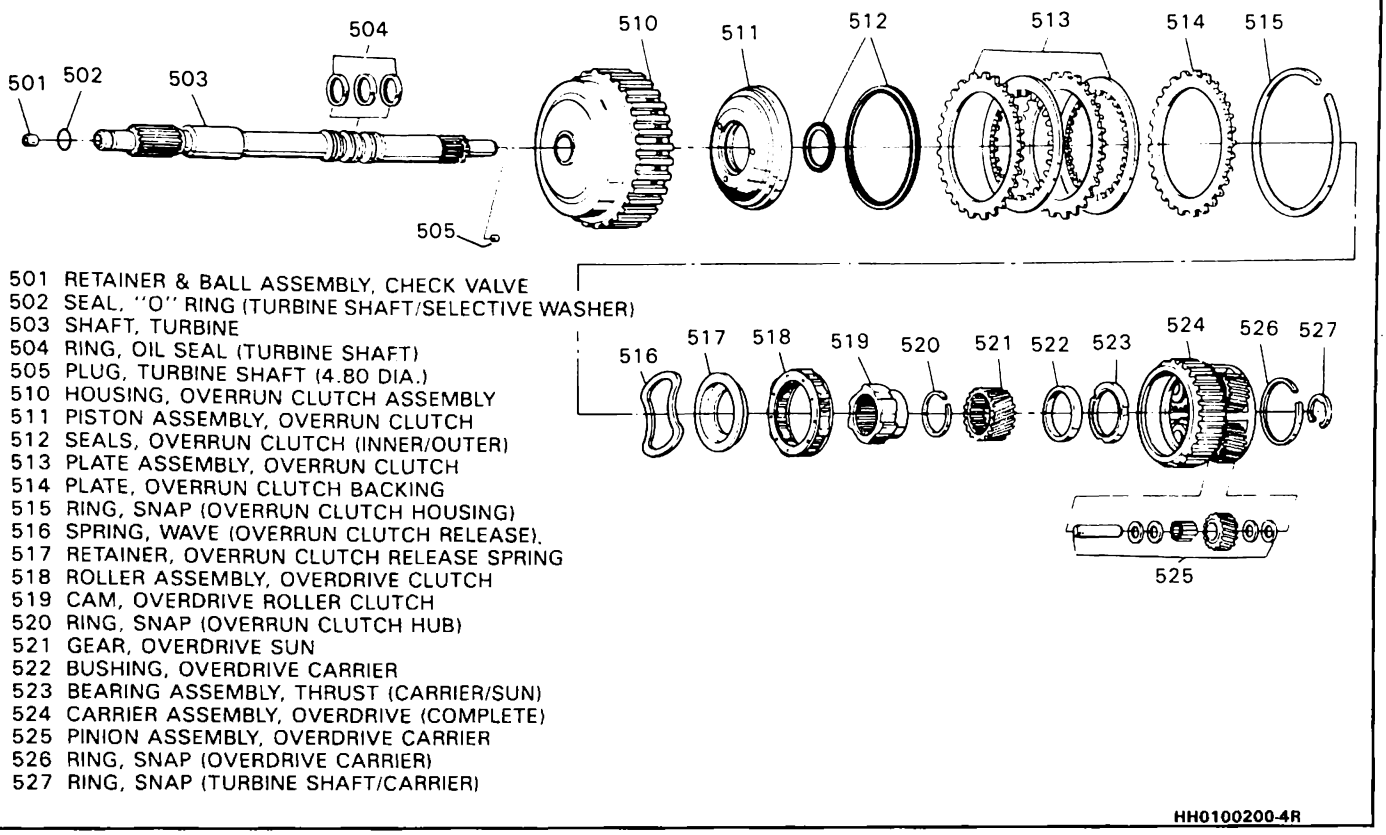

Figure 87 Overrun Clutch and Overdrive Carrier Components

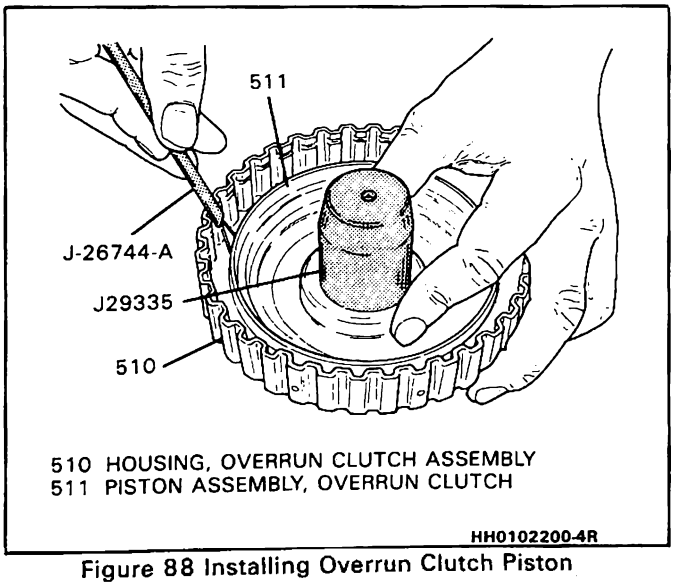

Figure 88 Installing Overrun Clutch Piston

2. (4) Overdrive pinion pins.
3. (4) pinions, (16) thrust washers, and needle bearings.
4. Thrust bearing (523).

Inspect

- Overdrive carrier (524) for:
  - damaged or worn splines
  - roller clutch race for damage or wear
  - housing for cracks
- Pinions for:
  - cracked or chipped teeth
  - bearing surface damage
- Pinion thrust washers for scoring or damage.
- Thrust bearing (523) for pitting or roughness.

Assemble (Figure 90)

1. Thrust bearing (523).
   - small diameter faces down
   - retain with petrolatum
2. (19) Needle bearings into each pinion.
   - retain with petrolatum
3. Position steel and bronze thrust washers on each end of pinion.
   - retain with petrolatum
4. Position pinion and thrust washers into carrier (524).
5. Insert pinion pins through carrier, thrust washers, and pinions.
6. Snap ring (526).

Measure (Figure 91)

- Check pinion end play.
- Clearance is 0.24mm-0.64mm (.009"-.025").

Turbine Shaft

Inspect (Figure 92)

- Turbine shaft seal rings (504) for nicks, cuts, or damage.
- Presence of cup plug (505).

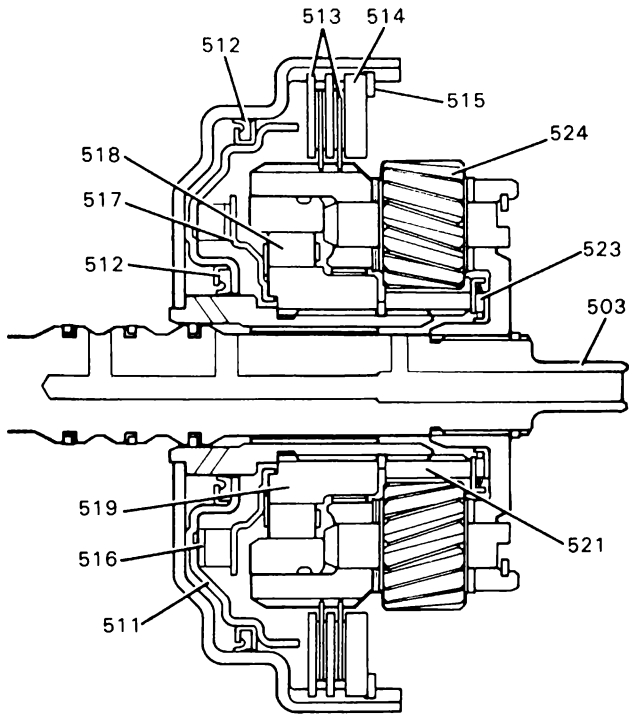

503 SHAFT, TURBINE
511 PISTON ASSEMBLY, OVERRUN CLUTCH
512 SEALS, OVERRUN CLUTCH (INNER/OUTER)
513 PLATE ASSEMBLY, OVERRUN CLUTCH
514 PLATE, OVERRUN CLUTCH BACKING
515 RING, SNAP (OVERRUN CLUTCH HOUSING)
516 SPRING, WAVE (OVERRUN CLUTCH RELEASE)
517 RETAINER, OVERRUN CLUTCH RELEASE SPRING
518 ROLLER ASSEMBLY, OVERDRIVE CLUTCH
519 CAM, OVERDRIVE ROLLER CLUTCH
521 GEAR, OVERDRIVE SUN
523 BEARING ASSEMBLY, THRUST (CARRIER/SUN)
524 CARRIER ASSEMBLY, OVERDRIVE (COMPLETE)

HH0101200-4R

Figure 89 Overrun Clutch and Overdrive Carrier Assemblies

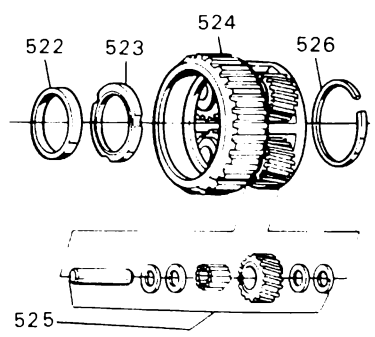

522 BUSHING, OVERDRIVE CARRIER
523 BEARING ASSEMBLY, THRUST (CARRIER SUN)
524 CARRIER ASSEMBLY, OVERDRIVE (COMPLETE)
525 PINION ASSEMBLY, OVERDRIVE CARRIER
526 RING, SNAP (OVERDRIVE CARRIER)

HH0103200-4R

Figure 90 Overdrive Carrier Assembly

- Snap ring grooves for nicks, wear, or damage.
- Check valve retainer and ball assembly (501)

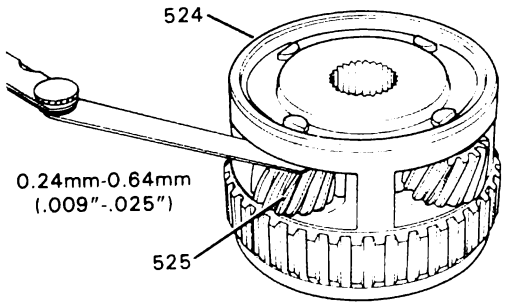

524 CARRIER ASSEMBLY, OVERDRIVE (COMPLETE)
525 PINION ASSEMBLY, OVERDRIVE CARRIER

HH0104-2004R-R1

Figure 91 Measuring Pinion End Play

- ball must move freely
- retainer must be tight in turbine shaft

Check Valve Assembly and Seal Ring Replacement Procedure

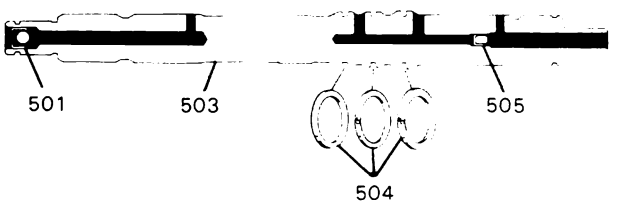

501 RETAINER & BALL ASSEMBLY, CHECK VALVE
503 SHAFT, TURBINE
504 RING, OIL SEAL (TURBINE SHAFT)
505 PLUG, TURBINE SHAFT (4.80 DIA.)

HH0107200-4R

Figure 92 Turbine Shaft Seals

Remove or Disconnect (Figure 93)

Tools Required
#4 Screw Extractor

1. Straighten the tangs of retainer and remove the ball.
2. Check ball retainer. Use #4 screw extractor.

Install or Connect (Figure 93)

Tools Required
9.5mm (3/8") diameter metal rod

- Install check valve (501):
  - Use 9.5mm (3/8") metal rod
  - seat check valve 3.0mm (1/8") below top of turbine shaft
  - be certain ball moves freely

Assemble (Figure 94)

Tools Required
J-29696-1 Turbine Shaft Seal Installer

1. Lubricate seals (504) with transmission fluid.

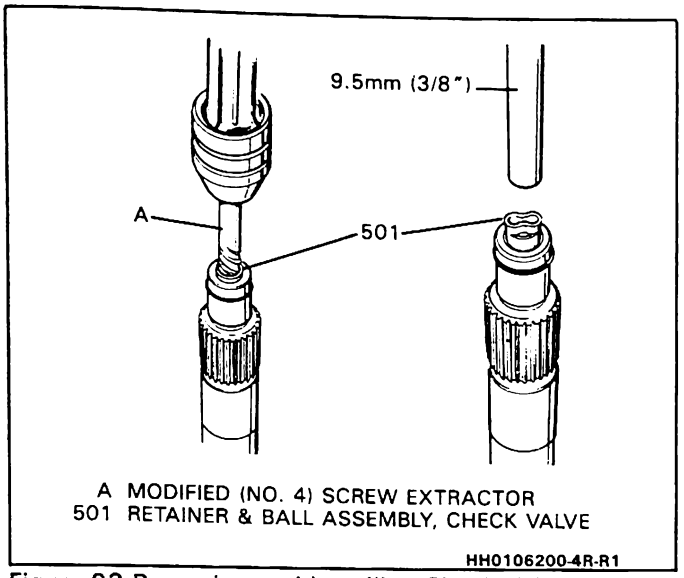

Figure 93 Removing and Installing Check Valve Retainer and Ball Assembly

- Install solid seal.Use J-29696-1.
- scarf cut seals.
- Lubricate seals (504). Size seals using J-29696-2.

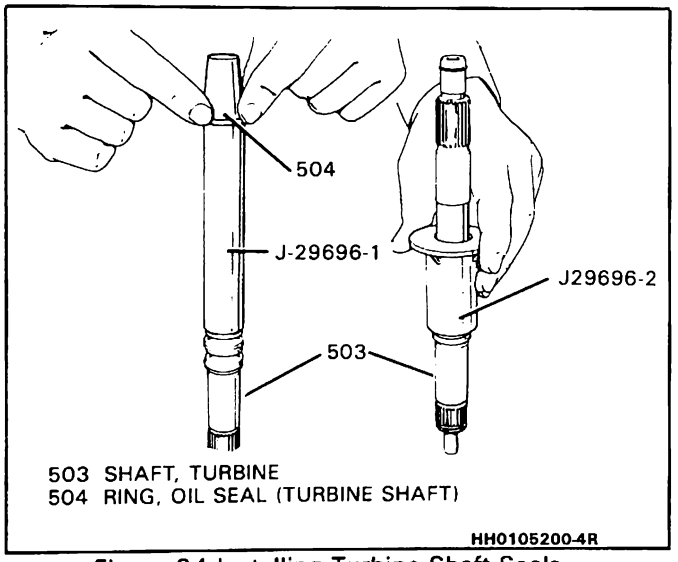

Figure 94 Installing Turbine Shaft Seals

Assemble (Figure 95)

1. Overdrive sun gear (521).
   - chamfered side up
2. Align clutch plates (513).
3. Overdrive carrier assembly (524) into overrun clutch assembly (510).
4. Position overrun clutch assembly (510) and overdrive carrier (524) as shown.
5. Turbine shaft (503).
6. Snap ring (527).
7. Overrun clutch and overdrive carrier assembly (510/524).

Inspect

- Clutch Plates (508)
  - composition plates for damaged tangs, delamination or wear
  - steel plates for damaged tangs, wear or heat damage
- Backing Plate (507) For:
  - scratches
  - damage

Assemble (Figure 95 and 96)

1. Fourth clutch plates (508):
   - soak in transmission fluid
   - install in the following order:
     - steel plate
     - composition plate
     - (2) steel plates
     - composition plate
2. Backing plate (507).
3. Snap ring (506).
   - composition plates must rotate freely
4. Oil deflector (542).
   - tangs face up
5. Overdrive unit.

Oil Pump Assembly

Remove or Disconnect (Figure 97)

1. Selective thrust washer (9).
2. Pump cover bolts (8).
3. Pump cover (217) from pump body (203).

Pump Body

Disassemble (Figure 98)

1. Pump slide spring (209).
   - compress with needle nose pliers
   - pull straight out

   CAUTION: Spring is under very high pressure. Place covering over spring to prevent injury.
2. From the pump pocket:
   - pump guide rings (212)
   - pump vanes (215)
   - pump rotor (214)
   - pump guide (213)
   - slide (206)
   - slide seal (211)
   - seal support (210)
   - pivot slide pin (208) and spring (207)
   - slide seal ring (204) and slide back up seal (205)

Oil Pump Cover

Disassemble (Figures 99 and 100)

1. Converter clutch apply valve train
   - compress converter clutch apply valve spring (228/229)
   - remove retaining ring (225)

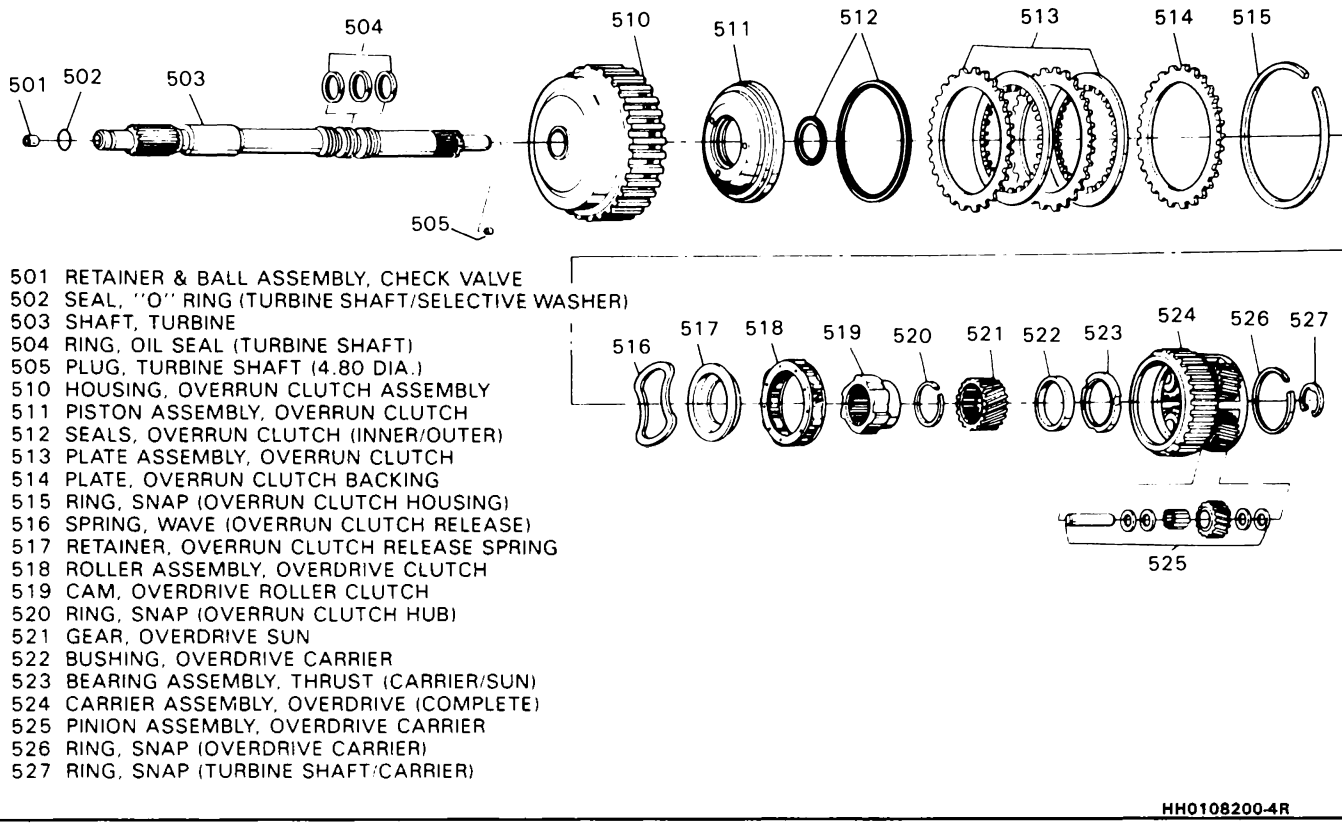

Figure 95 Turbine Shaft, Overrun Clutch and Overdrive Carrier Assemblies

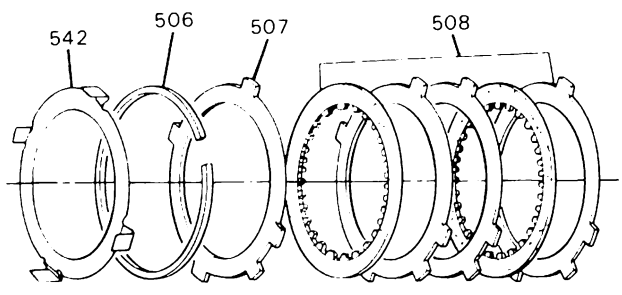

Figure 96 Installing Fourth Clutch Plates

- slowly release spring tension
- stop valve (226), converter clutch valve (227), and (2) converter clutch valve springs (228/229)

2. Pressure relief ball (231)
   - ball is under strong spring pressure
   - cover with a cloth when removing
3. Pressure regulator assembly (218-224)
   - follow the same procedure used to remove the converter clutch valve.

Inspect

- Pressure regulator assembly (218-224) and converter clutch apply valve assembly (225-229) for:
  - chips, burrs, distortion, plugged oil passages, and free movement in bore
  - remove burrs with crocus cloth
- Pressure relief assembly (231-232) for damage or distortion
- Pump cover (217) and pump body (203) for:
  - worn or damaged bushing (see Bushing Replacement Procedures)
  - foreign material or debris
  - scored or irregular mating surface
  - cross channel leaks
  - ring groove damage
- Rotor (214) and slide (206) for cracks
- Oil seal assembly for damage or wear

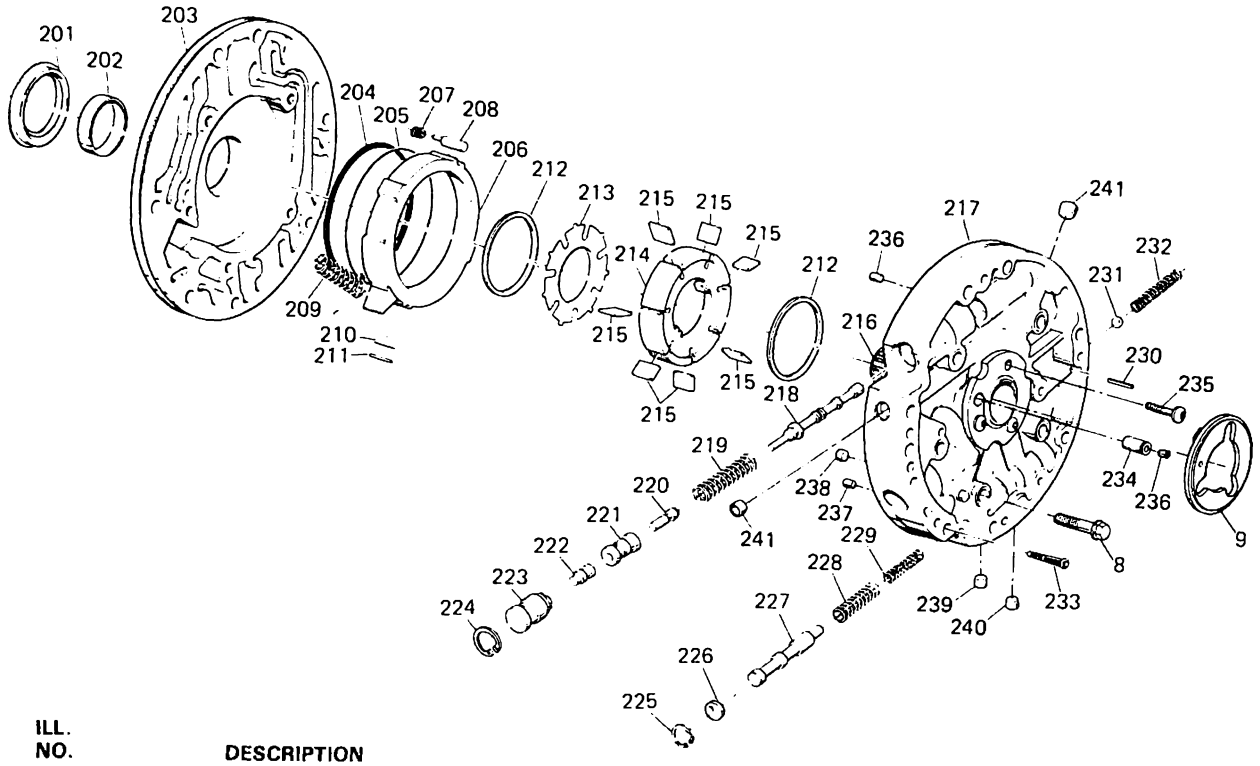

ILL. NO.	DESCRIPTION
8	BOLT, PUMP COVER TO BODY
9	WASHER, THRUST (HOUSING TO PUMP)
201	SEAL, HELIX (PUMP BODY) (FRONT)
202	BUSHING, PUMP BODY
203	BODY, PUMP
204	RING, OIL SEAL (SLIDE TO WEAR PLATE)
205	SEAL, "O" RING (SLIDE SEAL BACK-UP)
206	SLIDE, PUMP
207	SPRING, PIVOT PIN
208	PIN, PIVOT SLIDE
209	SPRING, PUMP SLIDE (INNER/OUTER)
210	SUPPORT, PUMP SLIDE SEAL
211	SEAL, PUMP SLIDE
212	RING, PUMP VANE
213	GUIDE, ROTOR
214	ROTOR, OIL PUMP
215	VANE, PUMP
216	SHAFT & FLANGE ASSEMBLY, STATOR
217	COVER, PUMP
218	VALVE, PRESSURE REGULATOR
219	SPRING, PRESSURE REGULATOR VALVE
220	VALVE, REVERSE BOOST
221	BUSHING, REVERSE BOOST VALVE
222	VALVE, T.V. BOOST
223	BUSHING, T.V. BOOST VALVE
224	RING, SNAP PRESSURE REGULATOR CASE
225	RING, SNAP (CONVERTER CL. PUMP VALVE RET.)
226	STOP, VALVE (CONVERTER CLUTCH)
227	VALVE, CONVERTER CLUTCH
228	SPRING, CONVERTER CLUTCH VALVE (OUTER)
229	SPRING, CONVERTER CLUTCH VALVE (INNER)
230	RIVET, FLAT HEAD (.156 X 1.0)
231	BALL, PRESSURE RELIEF
232	SPRING, PRESSURE RELIEF
233	SCREEN ASSEMBLY, GOVERNOR
234	PIN, DOWEL (PUMP COVER)
235	SCREW, SOCKET BUTTON HEAD (M6 X 1 X 16)
236	PLUG, CUP (SELECTIVE WASHER LUBE) (2)
237	PLUG, ORIFICE (CONV. CLUTCH SIGNAL) 4.84 DIA.
238	PLUG, ORIFICE (COOLER FEED) 6.84 DIA.
239	PLUG, CUP (COOLER FEED) 6.8 DIA.
240	PLUG, CUP (CLUTCH RELEASE) 6.8 DIA.
241	PLUG, CUP (LINE/CASE) .511 DIA. (2)

HH0110200-4R

Figure 97 Oil Pump Assembly

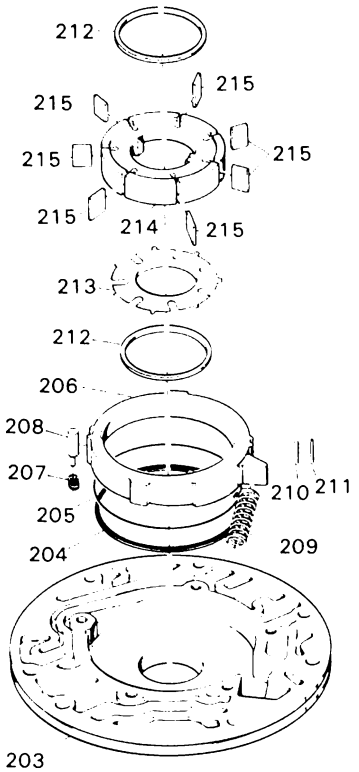

ILL. NO.	DESCRIPTION
203	BODY, PUMP
204	RING, OIL SEAL (SLIDE TO WEAR PLATE)
205	SEAL, "O" RING (SLIDE SEAL BACK-UP)
206	SLIDE, PUMP
207	SPRING, PIVOT PIN
208	PIN, PIVOT SLIDE
209	SPRING, PUMP SLIDE (INNER/OUTER)
210	SUPPORT, PUMP SLIDE SEAL
211	SEAL, PUMP SLIDE
212	RING, PUMP VANE
213	GUIDE, ROTOR
214	ROTOR, OIL PUMP
215	VANE, PUMP

HH0146200-4R

Figure 98 Pump Body Assembly

Clean

- Wash and air dry all parts
  - do not wipe dry with a cloth

Inspect

- Stator shaft and flange assembly (216) for:
  - damaged splines
  - damaged or missing orifice cup plug (236)

STATOR SHAFT AND FLANGE ASSEMBLY IS PRESSED INTO THE PUMP BODY. DO NOT REMOVE UNLESS DAMAGED.

Disassemble (Figures 100 and 101)

Tools Required

#27 TORX Drive Bit

1. Screws (235).
2. Press the stator shaft (216) from pump cover.

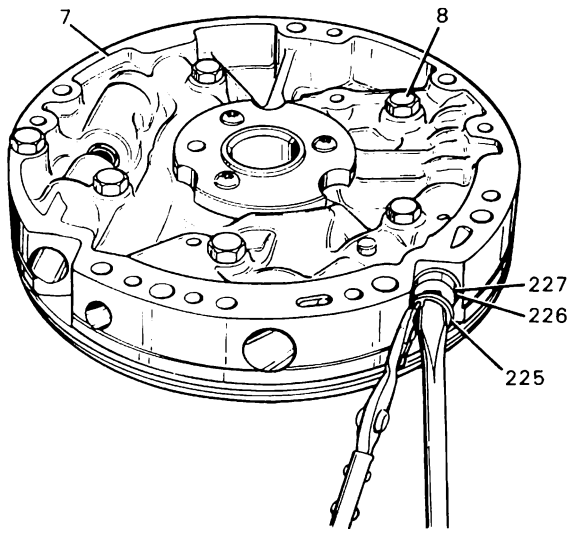

ILL. NO.	DESCRIPTION
7	PUMP ASSEMBLY, COMPLETE
8	BOLT, PUMP COVER TO BODY
225	RING, SNAP (CONVERTER CL. PUMP VALVE RET.) (FLAT SIDE OUT)
226	STOP, VALVE (CONVERTER CLUTCH)
227	VALVE, CONVERTER CLUTCH

HH0111200-4R

Figure 99 Removing Converter Clutch Valve Train

Assemble (Figures 100 and 101)

Tools Required

J-25359-3 #27 TORX Drive Bit

1. Align stator shaft (216) with dowel pin (234).
2. Press stator shaft until seated on pump cover (217).
3. Screws (235).
   - torque screws (235) to 12 N·m (9 lbs.-ft.)

Measure (Figure 102)

Tools Required

One-inch Micrometer

- Oil pump rotor (214) thickness.
- Oil pump slide (206) thickness.

Important

Measurement of rotor/slide must be made on undamaged surfaces. Select similar size replacements. Lightly hone both sides of replacement rotor or slide to remove any burrs or nicks.

Pump Body

Assemble (Figures 103 and 104)

Tools Required

J-25016 Seal Installer

1. Oil seal (201). Use J-25016.
2. "O" ring back-up seal (205) and oil seal ring (204) into the groove on the back side of slide.

ILL. NO.	DESCRIPTION
8	BOLT, PUMP COVER TO BODY
9	WASHER, THRUST (HOUSING TO PUMP)
216	SHAFT & FLANGE ASSEMBLY, STATOR
217	COVER, PUMP
218	VALVE, PRESSURE REGULATOR
219	SPRING, PRESSURE REGULATOR VALVE
220	VALVE, REVERSE BOOST
221	BUSHING, REVERSE BOOST VALVE
222	VALVE, T.V. BOOST
223	BUSHING, T.V. BOOST VALVE
224	RING, SNAP PRESSURE REGULATOR CASE
225	RING, SNAP (CONVERTER CL. PUMP VALVE RET.)
226	STOP, VALVE (CONVERTER CLUTCH)
227	VALVE, CONVERTER CLUTCH
228	SPRING, CONVERTER CLUTCH VALVE (OUTER)
229	SPRING, CONVERTER CLUTCH VALVE (INNER)
230	RIVET, FLAT HEAD (.156 X 1.0)
231	BALL, PRESSURE RELIEF
232	SPRING, PRESSURE RELIEF
233	SCREEN ASSEMBLY, GOVERNOR
234	PIN, DOWEL (PUMP COVER)
235	SCREW, SOCKET BUTTON HEAD (M6 X 1 X 16)
236	PLUG, CUP (SELECTIVE WASHER LUBE) (2)
237	PLUG, ORIFICE (CONV. CLUTCH SIGNAL) 4.84 DIA.
238	PLUG, ORIFICE (COOLER FEED) 6.84 DIA.
239	PLUG, CUP (COOLER FEED) 6.8 DIA.
240	PLUG, CUP (CLUTCH RELEASE) 6.8 DIA.
241	PLUG, CUP (LINE/CASE) .511 DIA. (2)

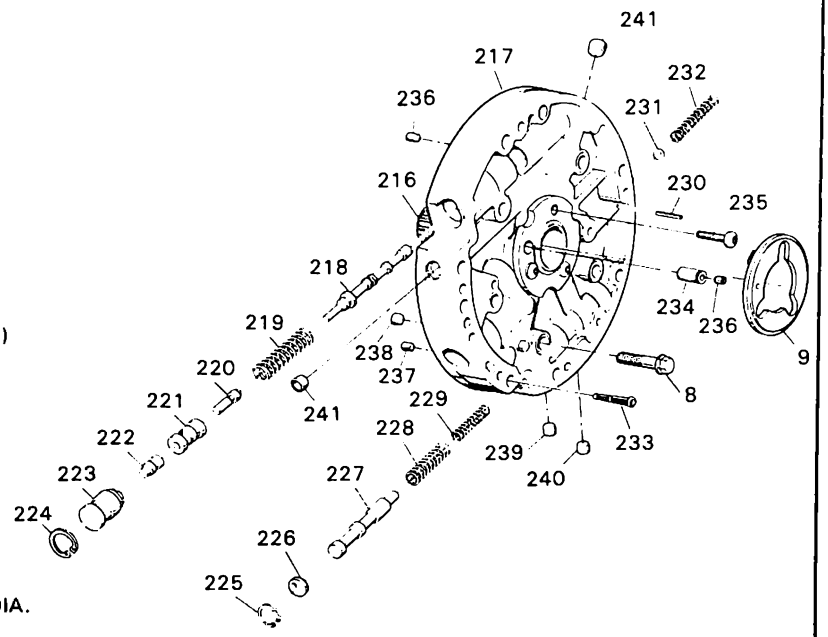

HH0147200-4R

Figure 100 Pump Cover Assembly

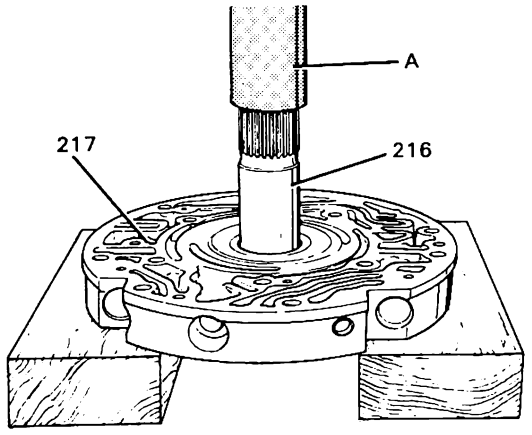

A MECHANICAL PRESS
216 SHAFT & FLANGE ASSEMBLY, STATOR
217 COVER, PUMP

HH0152200-4R

Figure 101 Removing and Installing Stator Shaft

3. Slide (206).
   - seal side down.
   - index the notch in the slide with the pivot pin
4. Slide seal (211) and support (210).
5. Pivot pin spring (207) and pin (208).
6. Vane guide ring (212) into the pump pocket.

Assemble

1. Rotor guide (213) onto rotor (214)
   - retain with petrolatum
2. Rotor (214).
3. Vanes (215).
4. Vane guide ring (212).
5. Pump slide spring (209).
6. Vane guide ring (212).

Pump Cover

Assemble (Figure 105)

1. Pressure relief ball (231), spring (232), and rivet (230).
2. Inner (229) and outer (228) converter clutch valve springs.
3. Converter clutch valve (227).
4. Valve stop (226).
5. Retaining ring (225).

Assemble

1. Pressure regulator valve (218) into the pressure regulator bore.
2. Pressure regulator spring (219).
3. T.V. boost valve (222) into the T.V. bushing
   - long land of the valve into the large hole of the bushing
   - retain with petrolatum.
4. Reverse boost valve (220) into the reverse boost bushing (221).
   - small end first
   - retain with petrolatum
5. Reverse boost valve sleeve (221) into the pressure regulator bore.

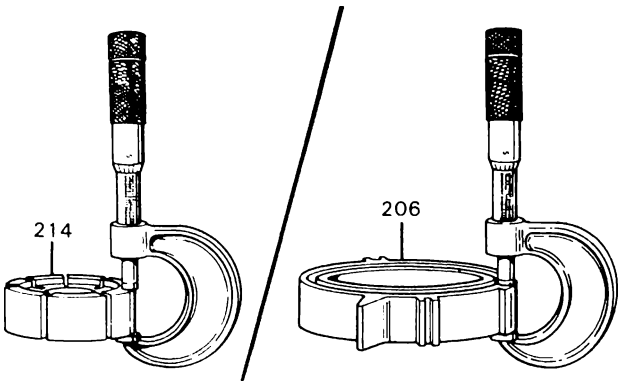

206 SLIDE, PUMP
214 ROTOR, OIL PUMP

OIL PUMP ROTOR SELECTION CHART

THICKNESS (mm)	THICKNESS (in.)
17.948 - 17.961	0.7066 - 0.7071
17.961 - 17.974	0.7071 - 0.7076
17.974 - 17.987	0.7076 - 0.7081
17.987 - 18.000	0.7081 - 0.7086
18.000 - 18.013	0.7086 - 0.7091

OIL PUMP SLIDE SELECTION CHART

THICKNESS (mm)	THICKNESS (in.)
17.948 - 17.961	0.7066 - 0.7071
17.961 - 17.974	0.7071 - 0.7076
17.974 - 17.987	0.7076 - 0.7081
17.987 - 18.000	0.7081 - 0.7086
18.000 - 18.013	0.7086 - 0.7091

HH0112200-4R

Figure 102 Measuring Oil Pump Rotor

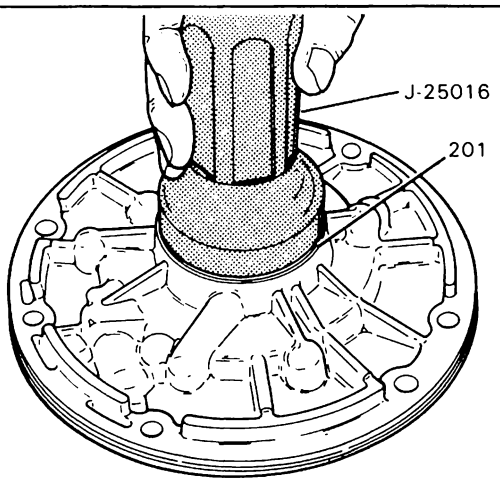

201 SEAL, HELIX (PUMP BODY) FRONT

HH0113200-4R

Figure 103 Installing Front Helix Seal

6. T.V. boost valve sleeve (223) into the pressure regulator bore.

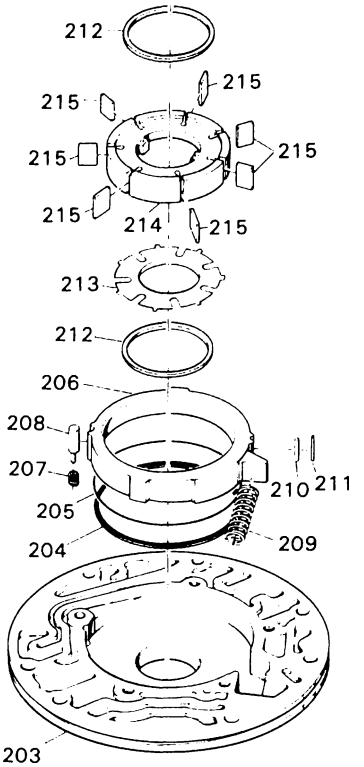

ILL. NO.	DESCRIPTION
203	BODY, PUMP
204	RING, OIL SEAL (SLIDE TO WEAR PLATE)
205	SEAL, "O" RING (SLIDE SEAL BACK-UP)
206	SLIDE, PUMP
207	SPRING, PIVOT PIN
208	PIN, PIVOT SLIDE
209	SPRING, PUMP SLIDE (INNER/OUTER)
210	SUPPORT, PUMP SLIDE SEAL
211	SEAL, PUMP SLIDE
212	RING, PUMP VANE
213	GUIDE, ROTOR
214	ROTOR, OIL PUMP
215	VANE, PUMP

HH0146200-4R

Figure 104 Pump Body Assembly

7. Retaining ring (224).

Oil Pump Cover and Body

Assemble (Figures 106 and 107)

Tools Required
J-25015 Oil Pump Body and Cover Alignment Band

1. Oil pump cover (217) onto oil pump body (203)
   - stator shaft through a bench hole.
2. Pump cover bolts (8)
   - leave finger tight.
3. Align pump cover and pump body with J-25015.
4. Torque bolts (8) to 24N·m (18 lbs.-ft.).
5. Remove J-25025.
6. "O" ring seal (10)
   - chamfered side out
   - do not twist seal
   - lubricate with transmission fluid
7. Thrust washer (9)
   - retain with petrolatum

ILL. NO.	DESCRIPTION
8	BOLT, PUMP COVER TO BODY
9	WASHER, THRUST (HOUSING TO PUMP)
216	SHAFT & FLANGE ASSEMBLY, STATOR
217	COVER, PUMP
218	VALVE, PRESSURE REGULATOR
219	SPRING, PRESSURE REGULATOR VALVE
220	VALVE, REVERSE BOOST
221	BUSHING, REVERSE BOOST VALVE
222	VALVE, T.V. BOOST
223	BUSHING, T.V. BOOST VALVE
224	RING, SNAP PRESSURE REGULATOR CASE
225	RING, SNAP (CONVERTER CL. PUMP VALVE RET.)
226	STOP, VALVE (CONVERTER CLUTCH)
227	VALVE, CONVERTER CLUTCH
228	SPRING, CONVERTER CLUTCH VALVE (OUTER)
229	SPRING, CONVERTER CLUTCH VALVE (INNER)
230	RIVET, FLAT HEAD (.156 X 1.0)
231	BALL, PRESSURE RELIEF
232	SPRING, PRESSURE RELIEF
233	SCREEN ASSEMBLY, GOVERNOR
234	PIN, DOWEL (PUMP COVER)
235	SCREW, SOCKET BUTTON HEAD (M6 X 1 X 16)
236	PLUG, CUP (SELECTIVE WASHER LUBE) (2)
237	PLUG, ORIFICE (CONV. CLUTCH SIGNAL) 4.84 DIA.
238	PLUG, ORIFICE (COOLER FEED) 6.84 DIA.
239	PLUG, CUP (COOLER FEED) 6.8 DIA.
240	PLUG, CUP (CLUTCH RELEASE) 6.8 DIA.
241	PLUG, CUP (LINE/CASE) .511 DIA. (2)

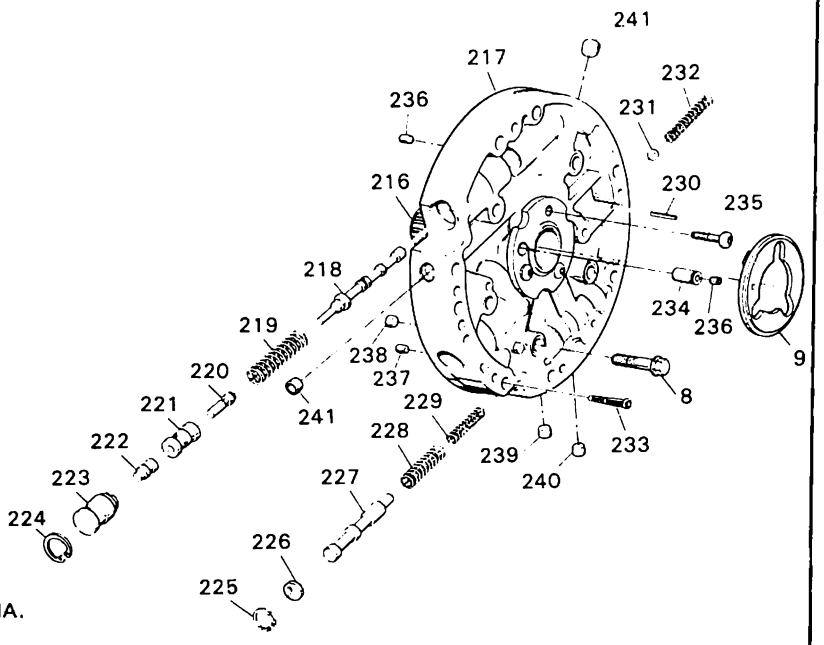

HH0147200-4R

Figure 105 Pump Cover Assembly

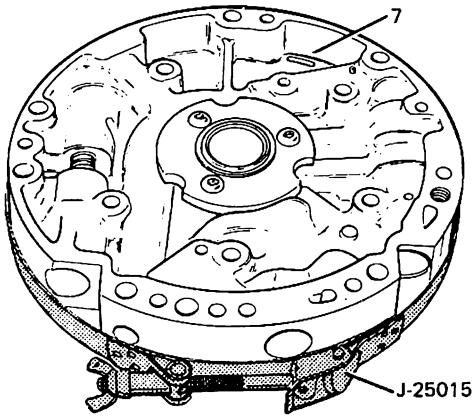

ILL. NO.	DESCRIPTION
7	PUMP ASSEMBLY, COMPLETE

HH0153200-4R

Figure 106 Aligning Pump Body and Pump Cover

Install or Connect (Figure 108)

Tools Required

J-25025-1 Alignment Pins

1. J-25025-1 into case as shown.
2. Gasket (11).
3. Oil pump assembly into the case
   - align all holes properly.
4. Bolts (5) and washers (6)
   - torque to 24 N·m (18 lbs.-ft.)

Important

Rotate the transmission to a horizontal position. If the transmission is assembled properly the turbine shaft should turn by hand. If not, identify and correct misassembly now.

Overdrive Unit End Play Check

Measure (Figures 109 and 110)

Tools Required

J-8001 Dial Indicator

J-24773-A Oil Pump Remover and End Play Checking Fixture

J-25022 End Play Fixture Adapter

J-25025-7A Post

1. Remove an oil pump to case bolt and install J-25025-7A and locknut.
2. Install J-24773,J-25022,and J-8001 as shown.
   - position dial indicator as shown.
3. Lift up on J-24773-5 with approximately 3 lbs. of force.
   - zero dial indicator
4. Increase lifting force to 20 lbs.
   - overdrive end play is 0.10mm-0.81mm (.004"-.027")
   - the selective washer that controls end play is located between the pump and the overrun clutch housing. If more or less end play is required, select the proper washer from the chart and install.

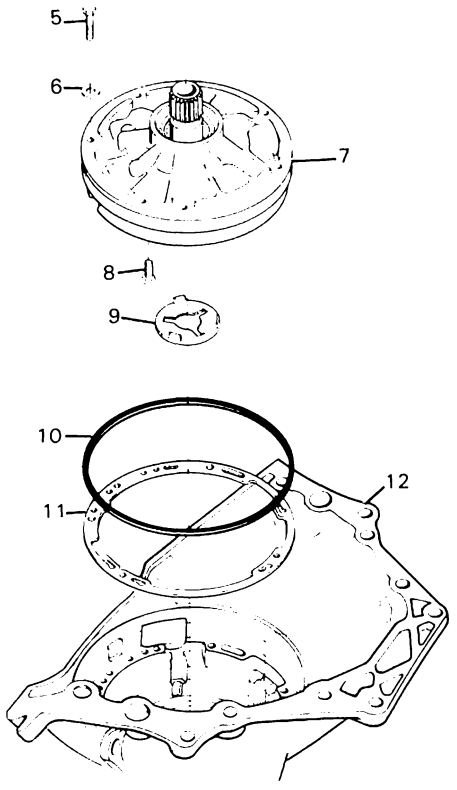

ILL. NO.	DESCRIPTION
5	BOLTS, M8 X 1.25 X 62
6	WASHER, PUMP TO CASE BOLTS
7	PUMP ASSEMBLY, COMPLETE
8	BOLT, PUMP COVER TO BODY
9	WASHER, THRUST (HOUSING TO PUMP)
10	SEAL, RING (PUMP TO CASE)
11	GASKET, PUMP COVER TO CASE
12	CASE & BUSHING ASSEMBLY

HH0148200-4R

Figure 107 Installing Pump Seal and Thrust Washer

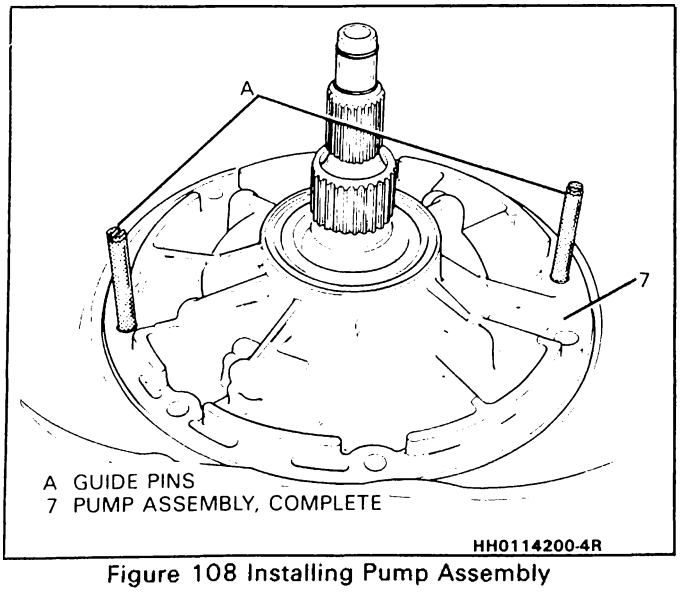

Figure 108 Installing Pump Assembly

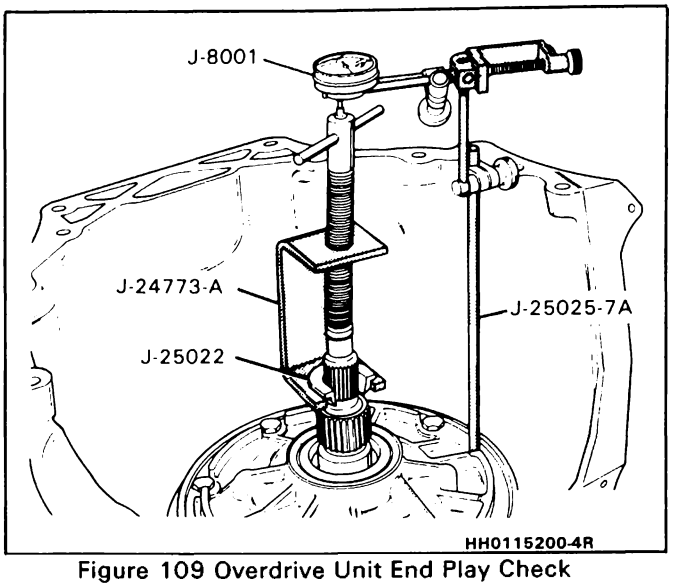

Figure 109 Overdrive Unit End Play Check

OVERDRIVE UNIT END PLAY WASHER THICKNESS CHART

THICKNESS		IDENTIFICATION NUMBER AND/OR COLOR
4.25-4.36mm	(0.167"-0.171")	0 - SCARLET
4.36-4.48mm	(0.172"-0.176")	1 - WHITE
4.49-4.60mm	(0.177"-0.180")	2 - COCOA BROWN
4.61-4.72mm	(0.181"-0.185")	3 - GRAY
4.73-4.84mm	(0.186"-0.190")	4 - YELLOW
4.85-4.96mm	(0.191"-0.195")	5 - LIGHT BLUE
4.97-5.08mm	(0.196"-0.200")	6 - PURPLE
5.09-5.20mm	(0.201"-0.204")	7 - ORANGE
5.21-5.32mm	(0.205"-0.209")	8 - GREEN

HH0116200-4R

Figure 110 Overdrive Unit End Play Washer Thickness Chart

EXTERNAL PARTS

Governor Assembly

Inspect

- Governor cover (34) for:
  - worn bore
  - scoring
  - plugged oil passage
- Governor driven gear for:
  - chipped teeth
  - damage
- Free movement of governor weights

Install or Connect (Figure 111)

1. Governor assembly (41).
2. Gasket (42), governor cover (43), and bolts (44)
   - make sure governor pilots into cover.
   - torque bolts to 24 N·m (18 lbs.-ft.)

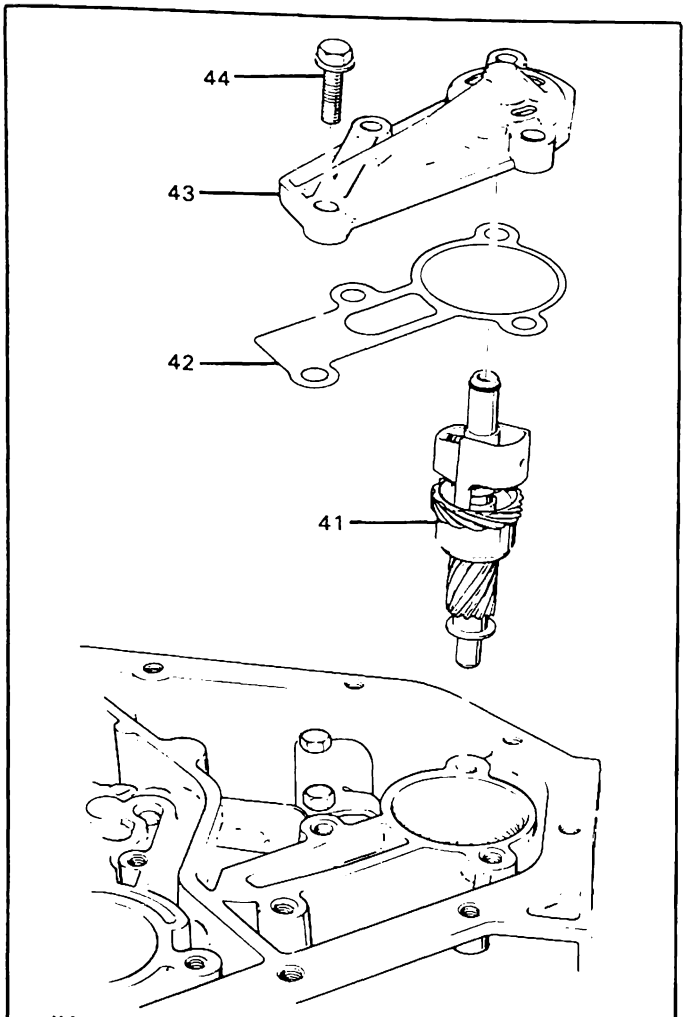

ILL. NO.	DESCRIPTION
41	GOVERNOR ASSEMBLY, COMPLETE
42	GASKET, GOVERNOR COVER
43	COVER ASSEMBLY, GOVERNOR
44	SCREW, GOVERNOR COVER

HH0117200-4R

Figure 111 Installing Governor Assembly

Intermediate Servo Piston

Measure (Figures 112 and 113)

Tools Required

J-8001 Dial Indicator

J-25014-1 Intermediate Band Apply Pin Gage

J-25014-2 Intermediate Band Apply Pin Gage

1. Install J-25014-2 in the intermediate servo bore.
   - align retaining ring with case slot.
2. Insert J-25014-1 into J-25014-2.
   - make sure tapered end of J-25014-1 is properly located against band apply pin.
   - make sure band apply pin is located in case.
3. Install J-8001. Position dial indicator stem against the zero post.
   - zero indicator.
   - J-25014-2 MUST BE SEATED SQUARELY AGAINST RETAINING RING.
4. Align the stepped side of pin J-25024-1 with torquing arm of J-25024-2.
5. Apply 12 N·m (100 lbs.-in.).
6. Position dial indicator stem over J-25014-1.
   - read dial indicator
   - see chart.

Important

Dial indicator travel is reversed, making indicator read backwards. On an indicator that ranges from 0-100, a .5mm (.020") travel will read .2mm (.080"). A 1.5mm (.060") travel will read 1mm (.040").

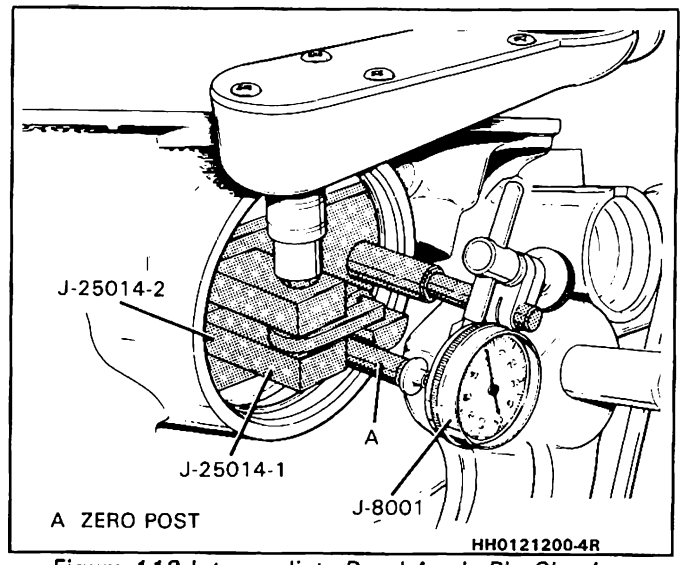

Figure 112 Intermediate Band Apply Pin Check

INTERMEDIATE BAND APPLY PIN SELECTION CHART

DIAL INDICATOR TRAVEL		APPLY PIN IDENTIFICATION
.0 - .72mm	(.0" - .029")	1 GROOVE
.72 - 1.44mm	(.029" - .057")	2 GROOVES
1.44 - 2.16mm	(.057" - .086")	3 GROOVES
2.16 - 2.88mm	(.086" - .114")	NONE

HH0120200-4R

Figure 113 Intermediate Band Apply Pin Selection Chart

Disassemble (Figure 114)

1. Outer (19) and inner (21) servo pistons and cushion spring (23).
2. Snap ring (24).
3. Spring retainer (25) and spring (26).
4. Inner (22) and outer (18 and 20) piston seals.
5. Band apply pin oil seals (28).

Inspect

- Band apply pins oil seals (28) for nicks or cuts

- Band apply pin (27) for:
  - proper fit in case
  - damage
  - debris in oil passages
- Piston seals (18, 20 and 22) for nicks cuts or damage

Assemble (Figure 114)

1. Spring (26) and retainer (25).
2. Snap ring (24).
3. Cushion spring (23).
4. Spring retainer (25) and outer (18 and 20) piston seals as shown.
5. Inner (21) and outer (19) servo pistons onto the band apply pin (27).
6. Compress spring (23).

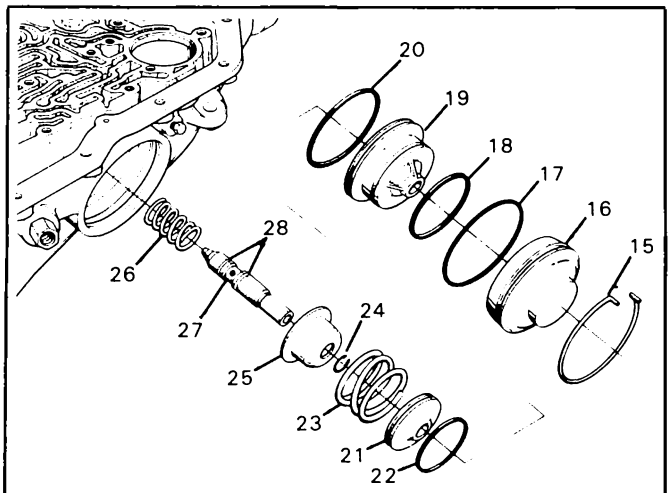

15 RING, SERVO COVER RETAINING
16 COVER, INTERMEDIATE SERVO
17 SEAL, "O" RING (INTERMEDIATE SERVO COVER)
18 RING, OIL SEAL (INNER)
19 PISTON, INTERMEDIATE SERVO (OUTER)
20 RING, OIL SEAL (OUTER)
21 PISTON, INTERMEDIATE SERVO (INNER)
22 RING, OIL SEAL PISTON (INNER)
23 SPRING, INTERMEDIATE SERVO CUSHION
24 RING, SNAP (APPLY PIN/RETAINER)
25 RETAINER, SERVO SPRING
26 SPRING, INTERMEDIATE SERVO (INNER)
27 PIN, INTERMEDIATE BAND APPLY (SELECTIVE)
28 RING, OIL SEAL (INTERMEDIATE BAND APPLY PIN)

HH0118200-4R

Figure 114 Intermediate Servo Assembly

Install or Connect (Figures 115 and 116)

Tool Required
J-29714

1. Lubricate piston oil seals (18, 20, and 22) with petrolatum.
2. Intermediate servo assembly.
3. Cover "O" ring (17).
   - lubricate with petrolatum
4. Cover (16).
5. Oil pan.
   - retain with two bolts
6. J-29714.
7. Retaining ring (15).
   - align ring gap with case slot
8. Remove J-29714, bolts and oil pan.

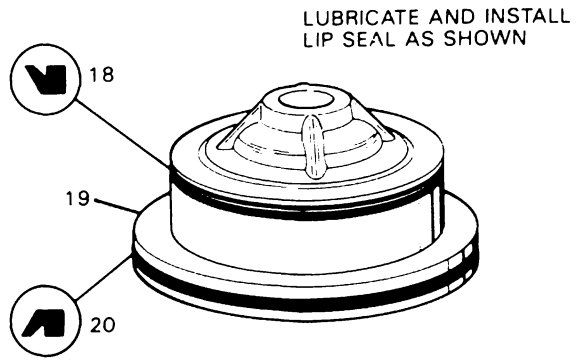

ILL. NO.	DESCRIPTION
18	RING, OIL SEAL (INNER)
19	PISTON, INTERMEDIATE SERVO (OUTER)
20	RING, OIL SEAL (OUTER)

HH0119200-4R

Figure 115 Intermediate Servo Piston Assembly

Control Valve Assembly

Clean

- Control valve assembly (74) thoroughly in solvent-move the valves with a pick or small screwdriver to dislodge any dirt or debris that may have accumulated
- Air dry

Disassemble (Figure 117)

- Control Valve Assembly
  - Position as shown on a clean surface
  - Remove valve trains beginning with the upper left hand corner. **NOTE:** Some valves are under pressure-cover the bores while removing the roll pins
  - Remove blind hole roll pins with a modified drill bit
  - Valves, springs, and bushings must be laid out on a clean surface in the exact sequence they are removed
  - Remove pressure switches

Clean

- All valves, springs, bushings and control valve body in clean solvent
- Dry using compressed air.

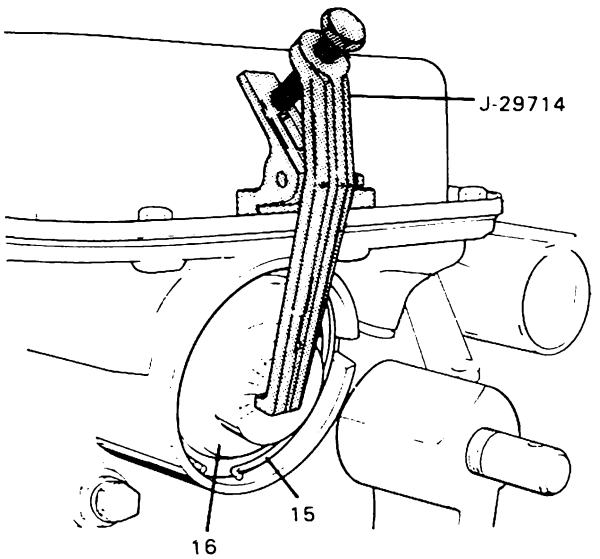

ILL. NO.	DESCRIPTION
15	RING, SERVO COVER RETAINING
16	COVER, INTERMEDIATE SERVO

HH0122200-4R

Figure 116 Installing Intermediate Servo Cover

Inspect

- All valves and bushings for:
  - porosity
  - scoring
  - nicks
  - scratches
- Springs for damaged or distorted coils
- Valve body casting for:
  - porosity
  - cracks
  - interconnected oil passages
  - damaged machined surfaces

Assemble (Figure 117)

- Control valve assembly (74) exactly as shown.

NOTICE: The position of the valve lands and bushing passages.

3-4 Accumulator

Install or Connect (Figures 118 and 119)

1. 3-4 Accumulator piston pin (76) into case.
2. Spring (51).
3. Piston oil seal ring (50)
   - retain with petrolatum.
4. Piston (49).
5. (8) Check balls (55) into case.

Install or Connect (Figures 120, 121, 122)

Tools Required
Guide Pins (2)

1. Install (2) guide pins as shown.
2. Spacer plate-to-case gasket (86) marked "C".
3. Spacer plate (56).
4. Spacer plate-to-valve body gasket (87) marked "VB".
5. (3) Check balls (55)
   - retain with petrolatum.
6. Control valve assembly (74)
   - position manual valve (345) and link (705) as shown.
7. Bolts (80 and 81)
   - torque to 12 N·m (9 lbs.-ft.)

Accumulator Assembly

Assemble (Figures 121 and 122)

1. Oil seal (60) onto 1-2 accumulator piston (61).
2. Piston (61) into housing (62).
3. Plate (57), gasket (58), spring (59), and housing (62) onto case.
4. Bolts (63)
   - torque to 12 N·m (8 lbs.-ft.)
5. Pressure switch (75) and bolt (80).

Install or Connect (Figure 123)

1. "O" ring (52) onto solenoid.
   - lubricate with petrolatum.
2. Solenoid (53) and bolts (54)
   - torque to 12 N·m (8 lbs.-ft.)
3. Signal oil pipe (83).
4. Pressure switch (73).
5. Manual detent roller and spring (708).
6. Install wire clips (79) and signal oil pipe retainer (84).
   - remove valve body bolts as necessary.
7. Case electrical connector (39) with seal (40).

Install or Connect (Figures 122, 123 and 124)

1. Throttle lever and bracket assembly:
   - install spring (70) on lifter (72)
   - lifter (72) into bracket, spring first
   - T.V. link (71) as shown
   - bracket (69) and bolt (81)
2. Seal/(67) onto filter (68)
   - lubricate with petrolatum.
3. Position oil filter as shown.
4. Oil pan gasket (66), oil pan (65), and bolts (64).
   - torque bolts to 16 N·m (12 lbs.-ft.)

TORQUE CONVERTER ASSEMBLY

Inspect

The torque converter assembly (1) must be replaced for any of the following conditions:

- Evidence of damage to the pump assembly

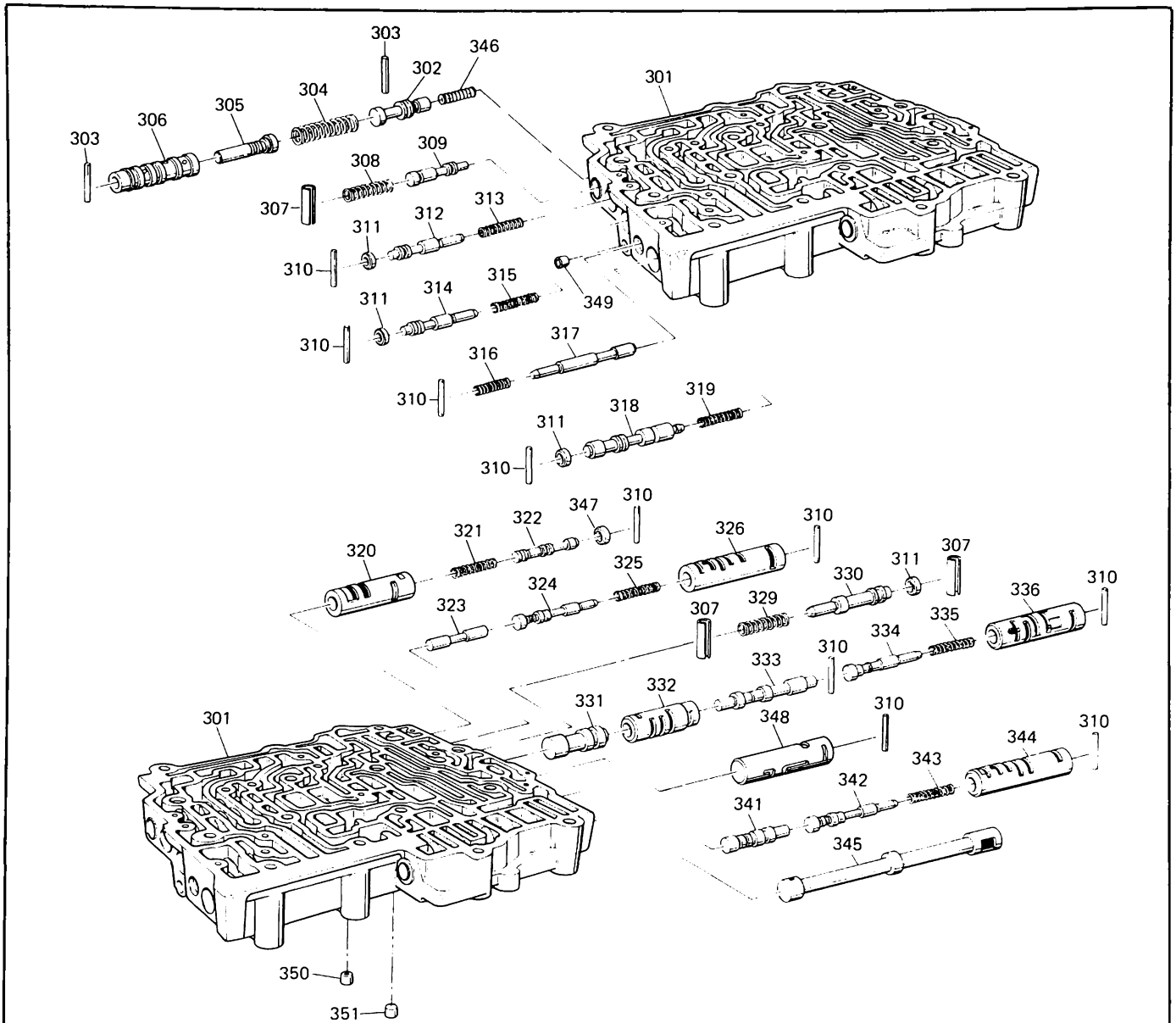

301 BODY, CONTROL VALVE
302 VALVE, THROTTLE
303 PIN, COILED SPRING 2.72 X 25 (2)
304 SPRING, THROTTLE VALVE
305 PLUNGER, THROTTLE VALVE
306 BUSHING, THROTTLE VALVE PLUNGER
307 SLEEVE, SPRING RETAINING (3)
308 SPRING, T.V. LIMIT VALVE
309 VALVE, T.V. LIMIT
310 PIN, COILED SPRING 2.72 X 20 (10)
311 PLUG, VALVE BORE 12.5mm (4)
312 VALVE, T.V. MODULATOR DOWNSHIFT
313 SPRING, T.V. MODULATOR DOWNSHIFT VALVE (SOME MODELS)
314 VALVE, T.V. MODULATOR UPSHIFT
315 SPRING, T.V. MODULATOR UPSHIFT VALVE (SOME MODELS)
316 SPRING, 3-2 CONTROL VALVE
317 VALVE, 3-2 CONTROL
318 VALVE, LINE BIAS
319 SPRING, LINE BIAS VALVE
320 BUSHING, ACCUMULATOR VALVE
321 SPRING, ACCUMULATOR VALVE
322 VALVE, ACCUMULATOR
323 VALVE, 3-4 SHIFT
324 VALVE, 3-4 THROTTLE
325 SPRING, 3-4 THROTTLE VALVE
326 BUSHING, 3-4 THROTTLE VALVE
329 SPRING, LO OVERRUN CLUTCH VALVE
330 VALVE, LO OVERRUN CLUTCH
331 VALVE, 1-2 SHIFT
332 BUSHING, LO-1ST/DETENT VALVE
333 VALVE, LO-1ST/DETENT
334 VALVE, 1-2 THROTTLE
335 SPRING, 1-2 THROTTLE VALVE
336 BUSHING, 1-2 THROTTLE VALVE
341 VALVE, 2-3 SHIFT
342 VALVE, 2-3 THROTTLE
343 SPRING, 2-3 THROTTLE VALVE
344 BUSHING, 2-3 THROTTLE VALVE
345 VALVE, MANUAL
346 SPRING, THROTTLE VALVE BOOST
347 PLUG, VALVE BORE (.56 DIA.)
348 PLUG, CONVERTER CLUTCH T.V. BORE
349 PLUG, CUP (7)
350 PLUG, CUP 4TH EXHAUST
351 PLUG, CUP 2-1 COASTDOWN

HH0123200-4R-R1

Figure 117 Control Valve Assembly

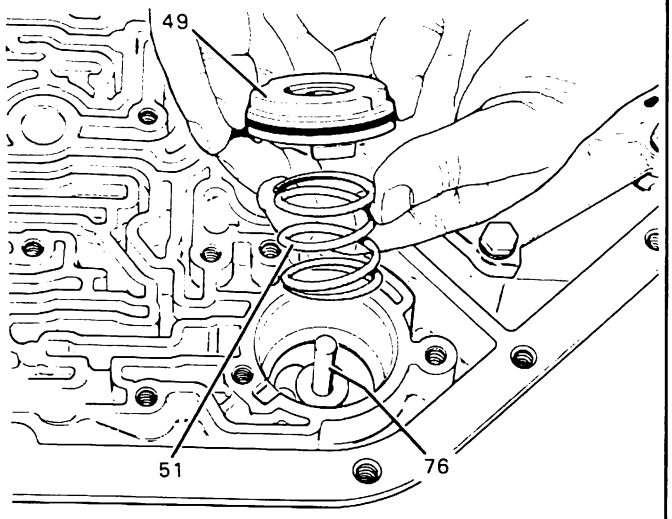

ILL. NO.	DESCRIPTION
49	PISTON, 3-4 ACCUMULATOR
51	SPRING, 3-4 ACCUMULATOR
76	PIN, ACCUMULATOR PISTON

HH0124200-4R

Figure 118 Installing 3-4 Accumulator Piston

- Metal particles are found after flushing the cooler and cooler lines
- External leaks in hub weld area
- Converter pilot is broken, damaged or poor fit into crankshaft
- Converter hub is scored or damaged
- Internal failure to stator
- Contamination from engine coolant
- Excess end play

Measure (Figure 125)

Tool Required:
J-35138 Torque Converter End Play Checking Tool

- Install J-35138 and measure end play
  - 0mm - .5mm (.020") for 245mm Torque Converters
  - 0mm - .6mm (.024") for 298mm Torque Converters

The Torque Converter Should Not Be Replaced If:

- The fluid has an odor, discolored or no evidence of metal or clutch plate material
  - Drain out as much fluid as possible
  - Replace the oil filter and pan gasket
  - Fill to proper level (Refer to Section 7A)
- The converter bolt hole threads are damaged
  - Correct with thread insert (Refer to Section 6A)

Flushing the torque converter is not recommended.

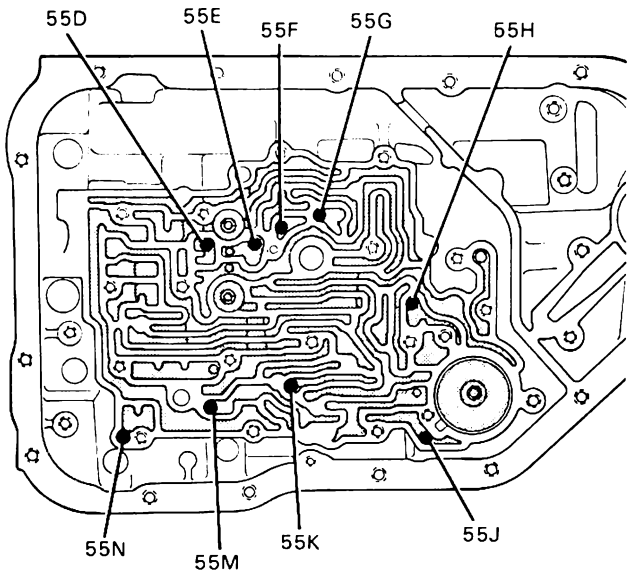

ILL. NO.	DESCRIPTION
55D	CHECK BALL #2 3RD ACCUMULATOR
55E	CHECK BALL #6 REVERSE/3RD
55F	CHECK BALL #4 3RD CLUTCH
55G	CHECK BALL #9 LO/DETENT
55H	CHECK BALL #10 LO/REVERSE
55J	CHECK BALL #1 4TH ACCUMULATOR
55K	CHECK BALL #7 INTERMEDIATE SERVO CHECK BALL IS LOCATED IN CAPSULE
55M	CHECK BALL #3 PT/D3
55N	CHECK BALL #5 T.V. EXHAUST

HH0015200-4R

Figure 119 Check Ball Location in Case

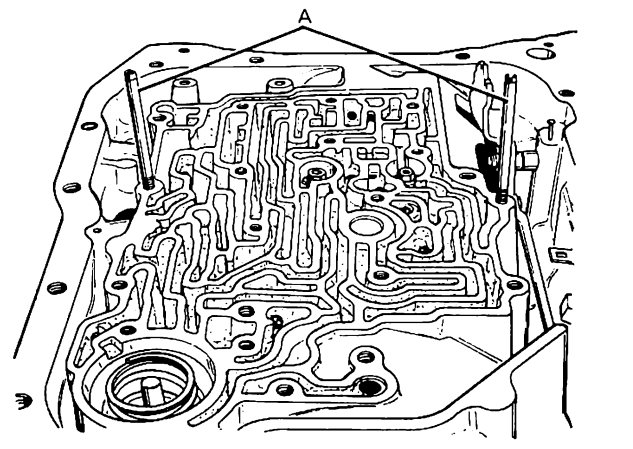

A GUIDE PINS

HH0125200-4R

Figure 120 Spacer Plate and Valve Body Alignment

Install or Connect

1. Torque converter (1).

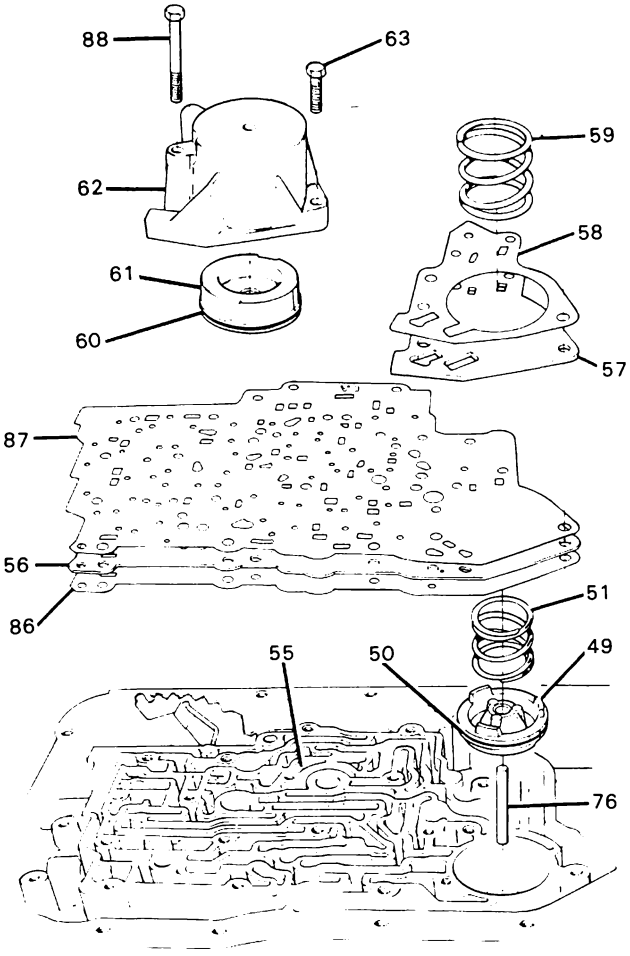

ILL. NO.	DESCRIPTION
49	PISTON, 3-4 ACCUMULATOR
50	RING, OIL SEAL (3-4 ACCUMULATOR PISTON)
51	SPRING, 3-4 ACCUMULATOR
55	BALL, .25 DIAMETER
56	PLATE, VALVE BODY SPACER
57	PLATE, ACCUMULATOR
58	GASKET, ACCUMULATOR HSG. TO ACCUM. PLATE
59	SPRING, 1-2 ACCUMULATOR PISTON
60	RING, OIL SEAL (1-2 ACCUMULATOR PISTON)
61	PISTON, 1-2 ACCUMULATOR
62	HOUSING & PIN ASSEMBLY, 1-2 ACCUMULATOR
63	BOLT, ACCUMULATOR HOUSING
76	PIN, ACCUMULATOR PISTON
86	GASKET, SPACER PLATE TO CASE
87	GASKET, VALVE BODY TO SPACER PLATE
88	BOLT, ACCUMULATOR HOUSING

HH0126-2004R-R2

Figure 121 Installing Spacer Plate and 1-2

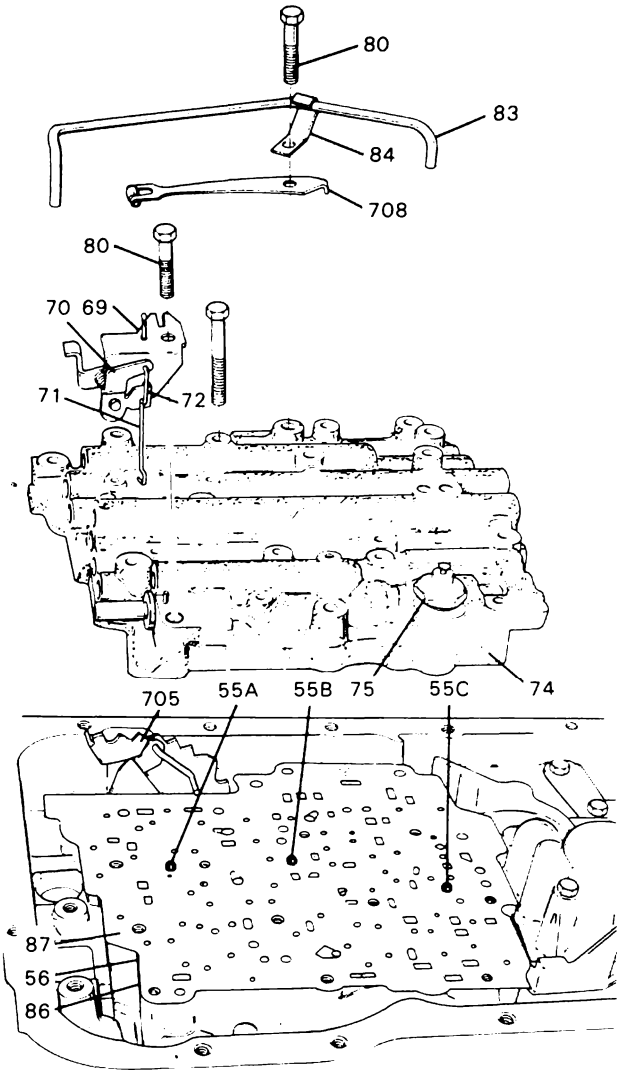

ILL. NO.	DESCRIPTION
55A	CHECK BALL #11
55B	CHECK BALL #8
55C	CHECK BALL #12
56	PLATE, VALVE BODY SPACER
69	LEVER & BRACKET ASSEMBLY, THROTTLE
70	SPRING, LIFTER (T.V. EXHAUST VALVE)
71	LINK, THROTTLE LEVER TO CABLE
72	LIFTER, T.V. EXHAUST
75	SWITCH ASSEMBLY, PRESSURE (3RD OR 4TH)
74	VALVE ASSEMBLY, CONTROL
80	BOLT, M6 X 1 X 45
83	PIPE, SIGNAL OIL
84	RETAINER, SIGNAL OIL PIPE
86	GASKET, SPACER PLATE TO CASE
87	GASKET, VALVE BODY TO SPACER PLATE
705	LINK, INSIDE DETENT (LEVER TO VALVE)
708	MANUAL DETENT ROLLER & SPRING ASSEMBLY

HH0127200-4R

Figure 122 Installing Control Valve and T.V. Lever and Bracket Assemblies

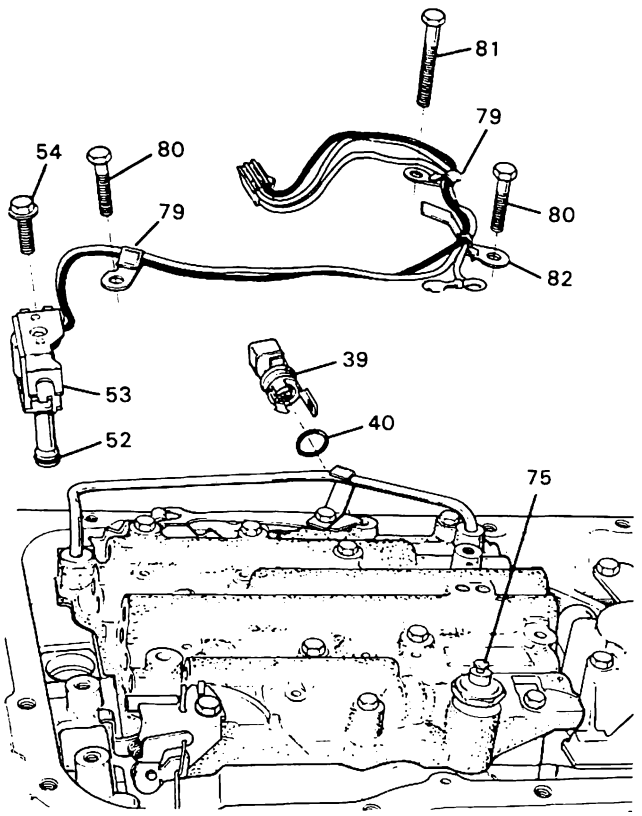

39 CONNECTOR, ELECTRICAL
40 SEAL, "O" RING (ELECTRICAL CONNECTOR)
52 SEAL, "O" RING (SOLENOID)
53 SOLENOID ASSEMBLY
54 BOLTS, HEX WASHER HEAD M6 X 1 X 12.0
75 SWITCH ASSEMBLY, PRESSURE (3RD OR 4TH)
79 CLIP, SOLENOID WIRE (2)
80 BOLT, M6 X 1 X 45
81 BOLT, M6 X 1 X 60
82 CLIP, FILTER RETAINER

HH0128200-4R

Figure 123 Installing Electrical Connector and Solenoid Assembly

2. J-21366 converter holding strap
3. Transmission assembly into vehicle
   - Refer to Section 7A1

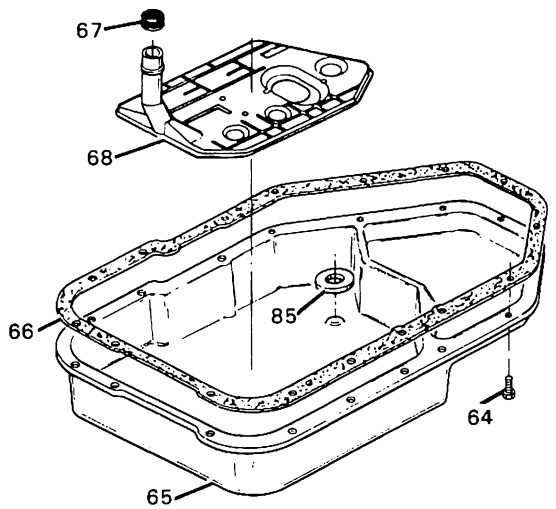

64 SCREW, CONICAL WASHER ASSEMBLY
65 PAN, TRANSMISSION OIL
66 GASKET, PAN
67 SEAL ASSEMBLY, FILTER NECK
68 FILTER ASSEMBLY, TRANSMISSION OIL
85 MAGNET, CHIP COLLECTOR

HH0027-2004R-1

Figure 124 Installing Oil Pan and Filter

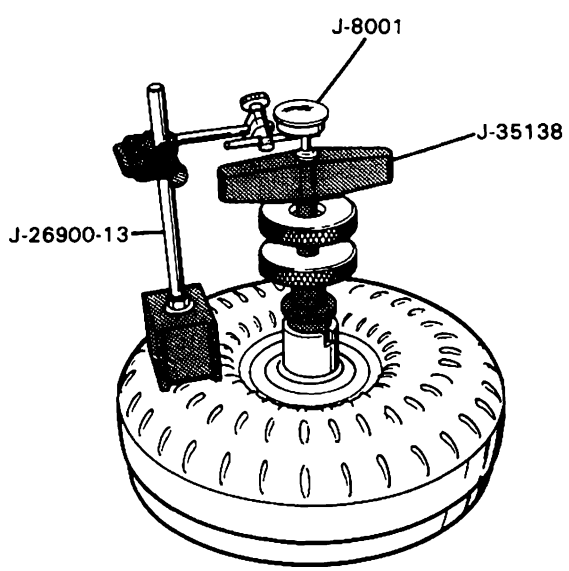

HH0001-HD

Figure 125 Checking Torque Converter End Play

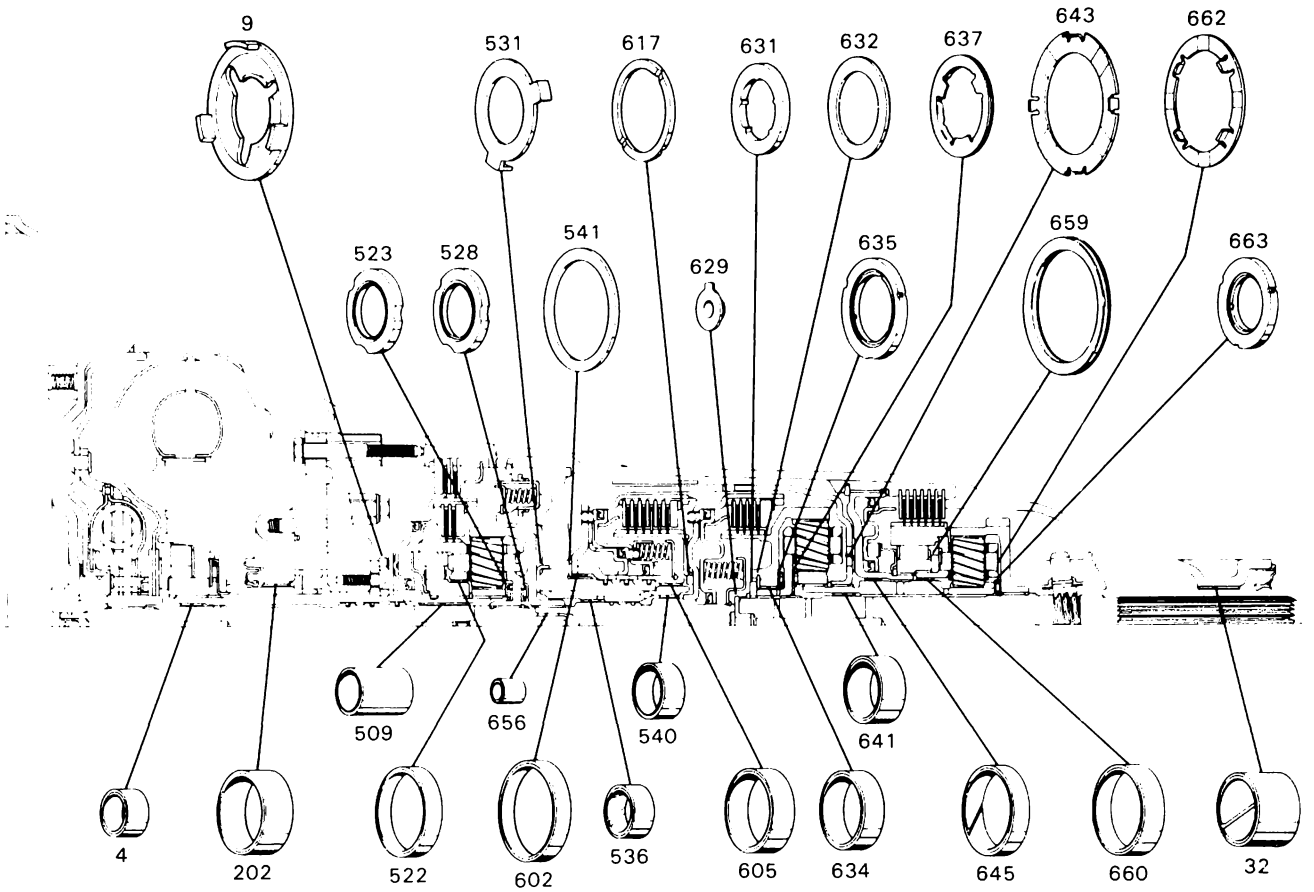

ILL. NO.	DESCRIPTION
4	BUSHING, STATOR SHAFT
9	WASHER, THRUST (HOUSING TO PUMP)
32	BUSHING, CASE REAR
202	BUSHING, PUMP BODY
509	BUSHING, OVERRUN CLUTCH
522	BUSHING, OVERDRIVE CARRIER
523	BEARING ASSEMBLY, THRUST (CARRIER/SUN)
528	BEARING ASM., THRUST (CARRIER/INTERNAL GEAR)
531	WASHER, THRUST (INTERNAL GEAR/SUPPORT)
536	BUSHING, CENTER SUPPORT (29.8 O.D. X 11.0)
540	BUSHING, CENTER SUPPORT (33.8 O.D. X 11.0)
541	WASHER, THRUST (SUPPORT/DIRECT CLUTCH)
602	BUSHING, DIRECT CLUTCH (FRONT)
605	BUSHING, DIRECT CLUTCH (REAR)
617	WASHER, THRUST (DIRECT/FORWARD CLUTCH)
629	WASHER, THRUST (FORWARD CL./OUTPUT) (SEL.)
631	WASHER, THRUST (SELECTIVE REAR)
632	WASHER, THRUST (INTERNAL GEAR/REAR SEL.)
634	BUSHING, FRONT INTERNAL GEAR
635	BEARING ASM., ROLLER (INTERNAL GEAR/CARRIER)
637	BEARING ASSEMBLY, THRUST (FRT. CARRIER/SUN)
641	BUSHING, REAR SUN GEAR
643	WASHER, THRUST (INPUT DRUM/HOUSING)
645	BUSHING, LO & REVERSE HOUSING
656	BUSHING, FORWARD CLUTCH HOUSING
659	BEARING, THRUST (REAR CAM/LO RACE)
660	BUSHING, REAR CARRIER (53.13 X 9.53)
662	WASHER, THRUST (REAR CARRIER/INTERNAL GEAR)
663	BEARING ASSEMBLY, ROLLER THRUST (SUN/INT.)

HH0130200-4R

Figure 126 Thrust Washer and Bushing Location

BUSHING REPLACEMENT PROCEDURE
PROTECT PARTS WITH WOOD BLOCKS OR CLOTH AS NECESSARY

REMOVE AS SHOWN	INSTALL AS SHOWN

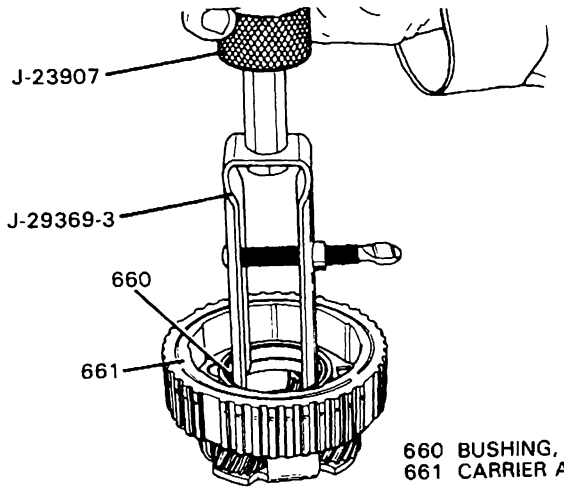

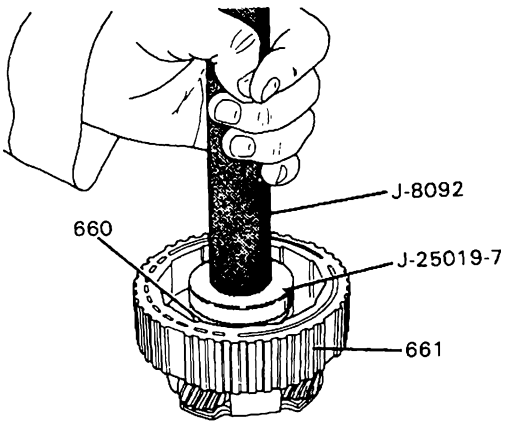

660 BUSHING, REAR CARRIER (53.13 X 9.53)
661 CARRIER ASSEMBLY, REAR (COMPLETE)

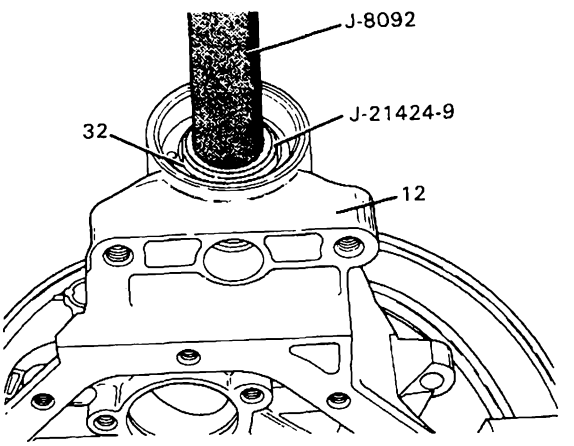

12 CASE & BUSHING ASSEMBLY
32 BUSHING, CASE REAR

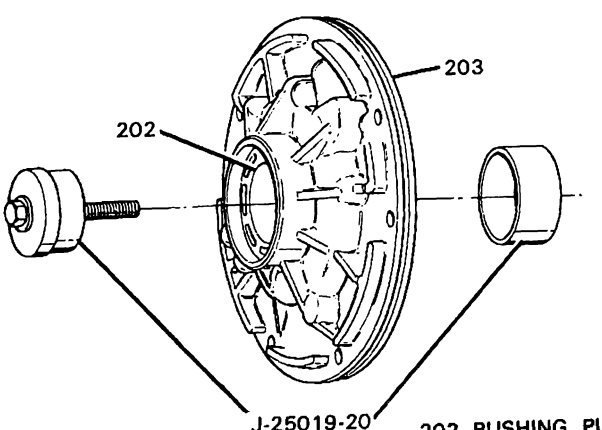

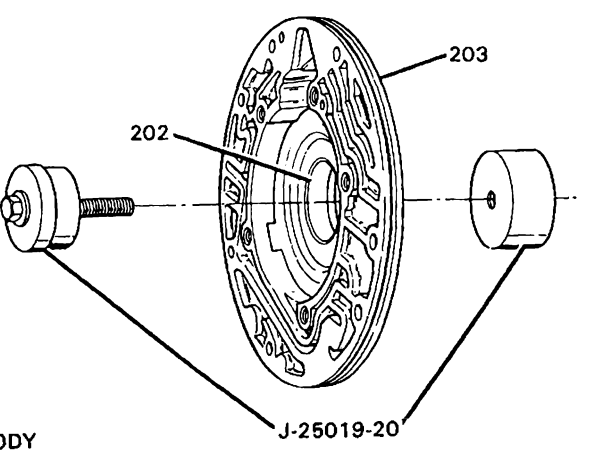

202 BUSHING, PUMP BODY
203 BODY, PUMP

HH131-2004R-R1

Figure 127 Bushing Replacement Procedure

BUSHING REPLACEMENT PROCEDURE
PROTECT PARTS WITH WOOD BLOCKS
OR CLOTH AS NECESSARY

REMOVE AS SHOWN	INSTALL AS SHOWN
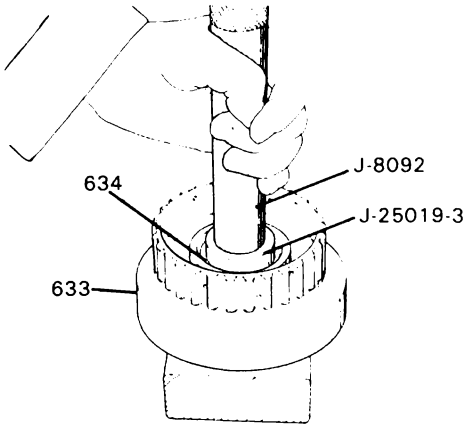	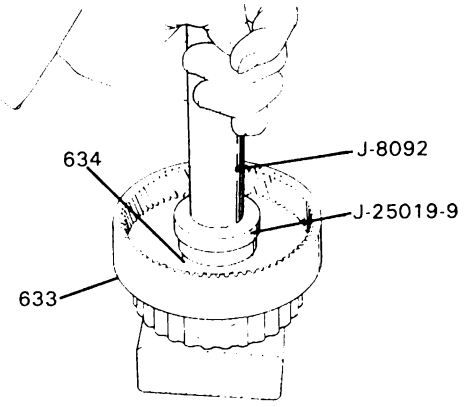
633 GEAR, FRONT INTERNAL 634 BUSHING, FRONT INTERNAL GEAR	
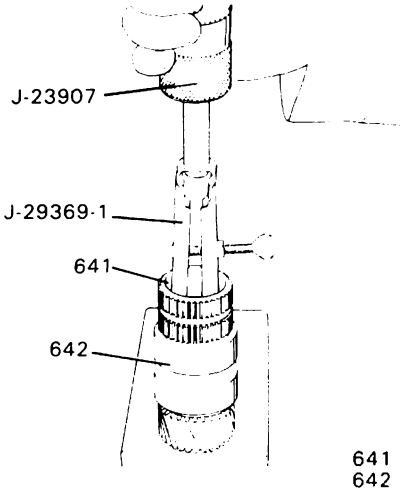	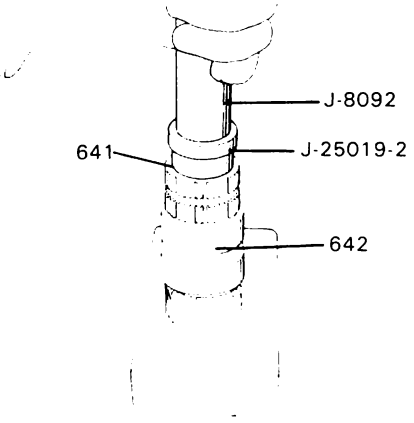
641 BUSHING, REAR SUN GEAR 642 GEAR, REAR SUN	
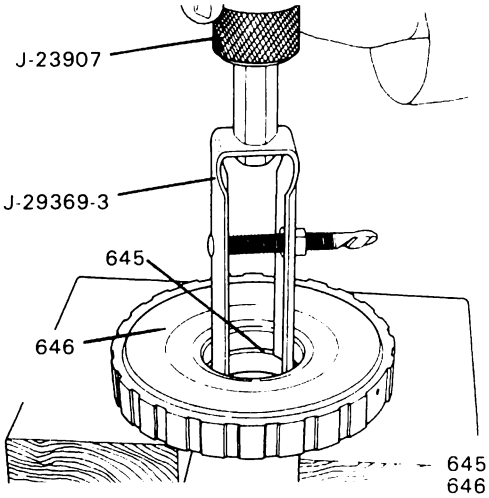	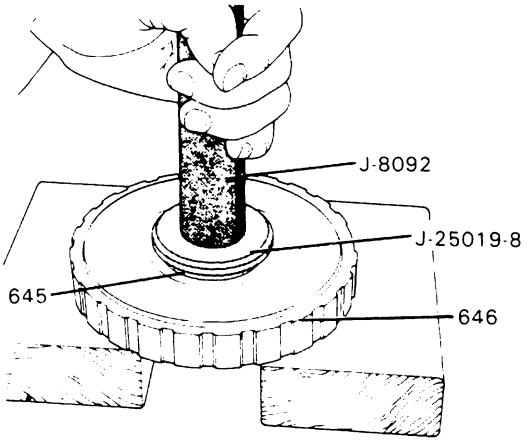
645 BUSHING, LO & REVERSE HOUSING 646 HOUSING ASSEMBLY, LO & REVERSE CLUTCH	

HH0132200-4R

Figure 128 Bushing Replacement Procedure

BUSHING REPLACEMENT PROCEDURE
PROTECT PARTS WITH WOOD BLOCKS
OR CLOTH AS NECESSARY

REMOVE AS SHOWN | **INSTALL AS SHOWN**

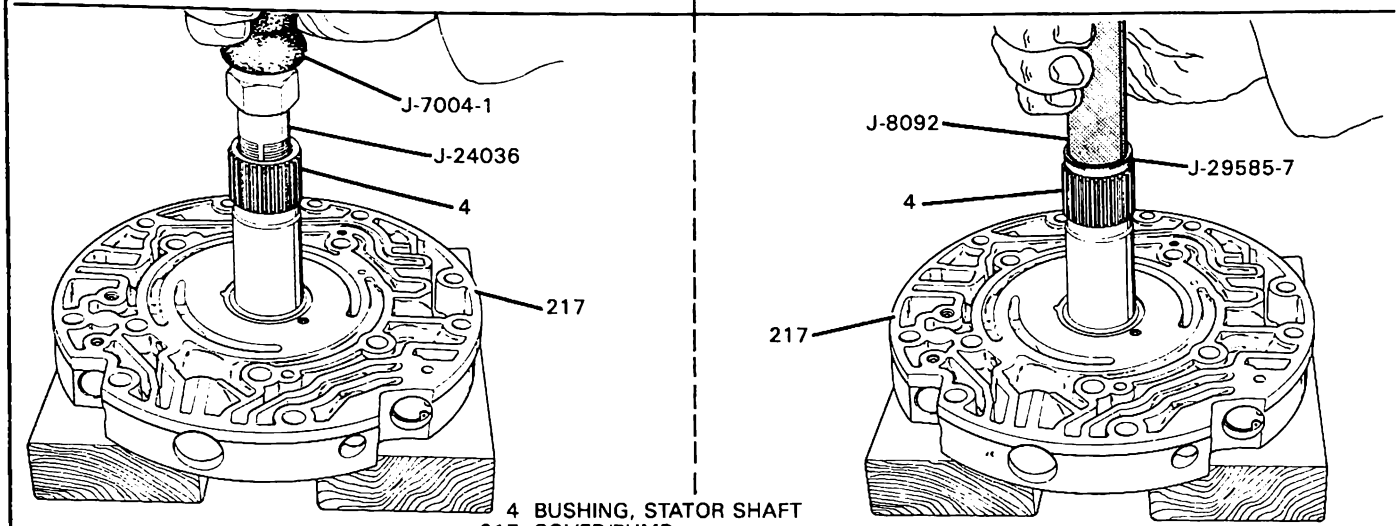

4 BUSHING, STATOR SHAFT
217 COVER/PUMP

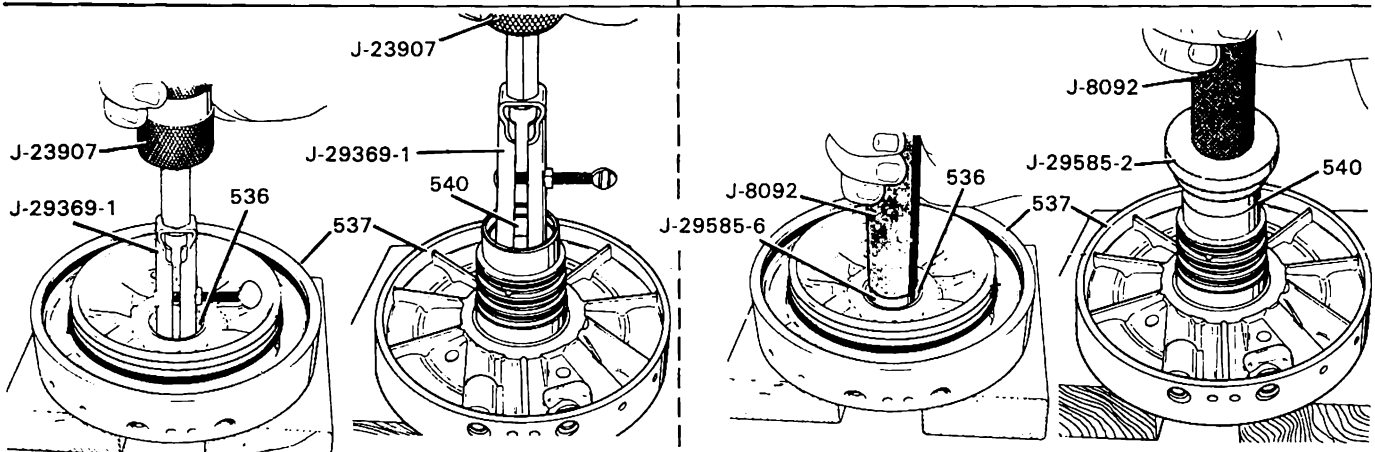

536 BUSHING, CENTER SUPPORT (29.8 O.D. X 11.0)
537 SUPPORT, CENTER
540 BUSHING, CENTER SUPPORT (33.8 O.D. X 11.0)

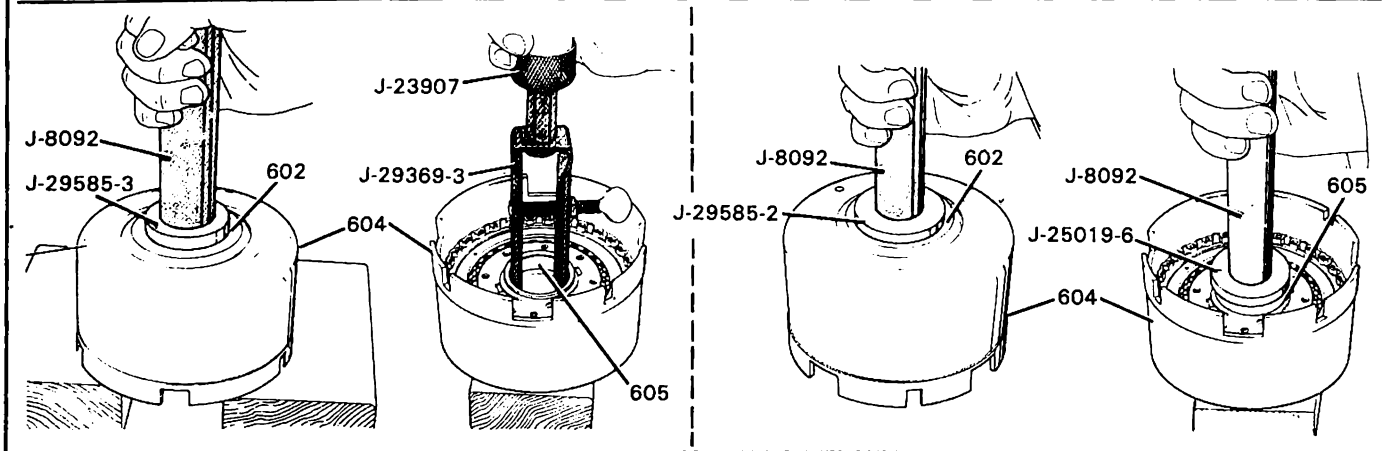

602 BUSHING, DIRECT CLUTCH (FRONT)
604 HOUSING & DRUM ASSEMBLY, DIRECT CLUTCH
605 BUSHING, DIRECT CLUTCH (REAR)

HH0133-2004R-R1

Figure 129 Bushing Replacement Procedure

BUSHING REPLACEMENT PROCEDURE
PROTECT PARTS WITH WOOD BLOCKS
OR CLOTH AS NECESSARY

REMOVE AS SHOWN	INSTALL AS SHOWN

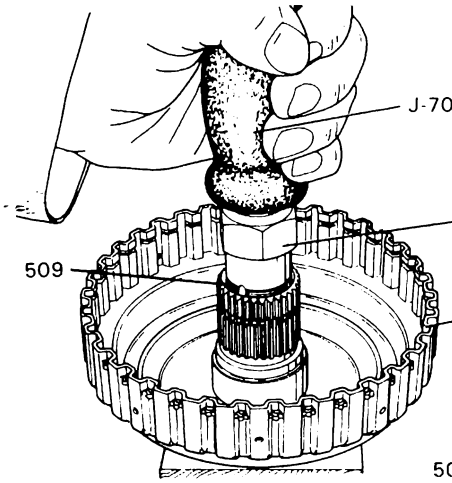

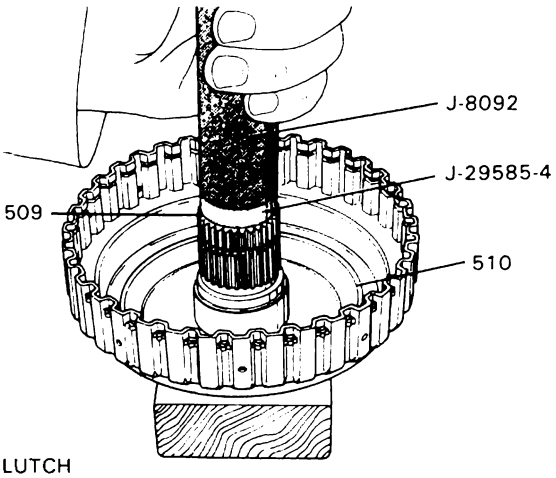

509 BUSHING, OVERRUN CLUTCH
510 HOUSING, OVERRUN CLUTCH ASSEMBLY

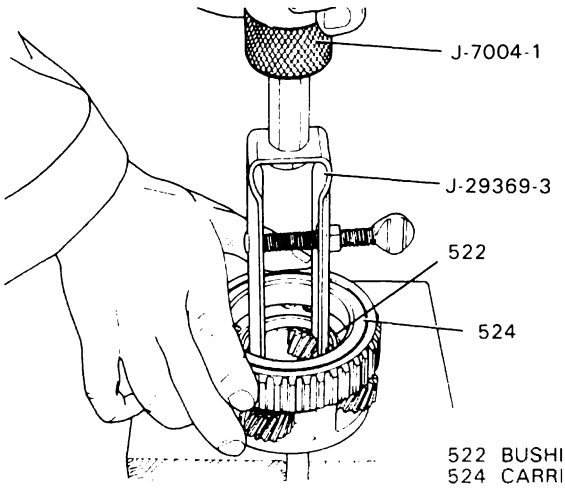

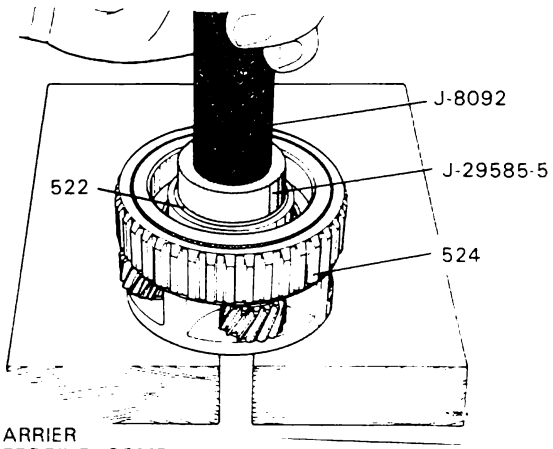

522 BUSHING, OVERDRIVE CARRIER
524 CARRIER ASSEMBLY, OVERDRIVE (COMPLETE)

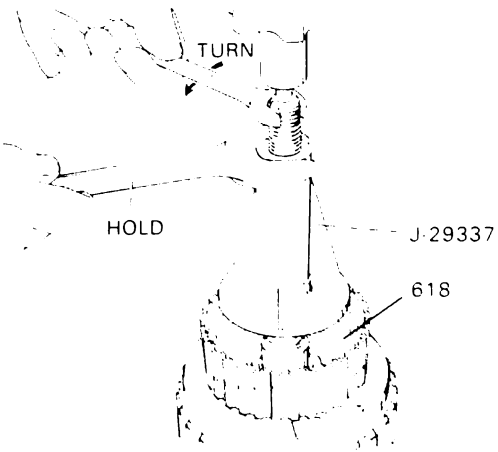

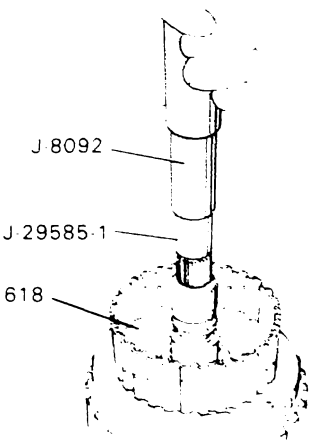

618 HOUSING ASSEMBLY FORWARD CLUTCH

HH0134200-4R

Figure 130 Bushing Replacement Procedure

200-4R CLUTCH PLATE AND APPLY RING USAGE CHART

OVERRUN CLUTCH			FOURTH CLUTCH			DIRECT CLUTCH				
FLAT STEEL PLATE		COMP. FACED PLATE	FLAT STEEL PLATE		COMP. FACED PLATE	FLAT STEEL PLATE		COMP. FACED PLATE	APPLY RING	
No.	Thickness	No.	No.	Thickness	No.	No.	Thickness	No.	I.D.	Width
2	1.969mm (.077")	2	3	1.969mm (.077")	2	6	2.324mm (.091")	6	19	12.5mm (.492")

FORWARD CLUTCH					LO & REVERSE CLUTCH						
WAVE PLATE		FLAT STEEL PLATE		COMP. FACED PLATE	WAVE PLATE		FLAT STEEL PLATE		COMP. FACED PLATE	APPLY RING	
No.	Thickness	No.	Thickness	No.	No.	Thickness	No.	Thickness	No.	I.D.	Width
2	1.585mm (.062")	3	1.969mm (.077")	4	1	1.969mm (.077")	7	1.969mm (.077")	6	0	13.13mm (.516")

HH0139200-4R-R2

Figure 131 Clutch Plate Chart

TORQUE SPECIFICATIONS

DESCRIPTION OF USAGE	QUANTITY	SIZE	TORQUE ASSEMBLY
LINE PRESSURE TAKE-OFF AND DIRECT CLUTCH PRESSURE TAKE-OFF	2	1/8-27 NPTF	7.0-14.0 N·m (5-10 ft.-lbs.)
COOLER CONNECTOR	2	1/4-18 NPSF	35.0-40.0 N·m (26-30 ft.-lbs.)
VALVE BODY ASSEMBLY TO CASE	15	M6 x 1.0	13.0-17.0 N·m (9-12 ft.-lbs.)
SPEEDO RETAINER TO CASE	1	M6 x 1.0	8.0-14.0 N·m (6-10 ft.-lbs.)
PUMP BODY TO PUMP COVER	5	M8 x 1.25	20.0-27.0 N·m (15-20 ft.-lbs.)
PUMP ASSEMBLY TO CASE	7	M8 x 1.25	20.0-27.0 N·m (15-20 ft.-lbs.)
PARKING LOCK BRACKET TO CASE	2	M8 x 1.25	20.0-27.0 N·m (15-20 ft.-lbs.)
TRANSMISSION OIL PAN TO CASE	16	M8 x 1.25	8.0-14.0 N·m (6-10 ft.-lbs.)
MANUAL SHAFT TO INSIDE DETENT LEVER (NUT)	1	M10 x 1.5	27.0-34.0 N·m (20-25 ft.-lbs.)
STATOR SHAFT TO PUMP COVER	3	M6 x 1.0	10.0-14.0 N·m (7-10 ft.-lbs.)
CASE TO CENTER SUPPORT	2	M10 x 1.5	20.0-27.0 N·m (15-20 ft.-lbs.)
SOLENOID TO CASE	2	M6 x 1.0	10.0-14.0 N·m (7-10 ft.-lbs.)
PRESSURE SWITCH	1	1/8-27 NPTF	7.0-14.0 N·m (5-10 ft.-lbs.)
ACCUMULATOR HOUSING TO CASE	5	M6 x 1.0	10.0-14.0 N·m (7-10 ft.-lbs.)
GOVERNOR COVER TO CASE	4	M8 x 1.25	20.0-27.0 N·m (15-20 ft.-lbs.)

HH0137200-4R

Figure 132 Torque Specifications

REQUIRED SPECIAL TOOLS

TOOL NO.	NAME
J-29332	OUTPUT SHAFT LOADING FIXTURE ADAPTER
J-25013-1	REAR UNIT SUPPORT
J-24773-5	OIL PUMP REMOVER SCREW
J-24773-A	OIL PUMP REMOVER & END PLAY CHECKING FIXTURE
J-29334	FOURTH CLUTCH COMPRESSOR & CENTER SUPPORT REMOVER
J-29335	INNER OVERRUN CLUTCH PISTON SEAL PROTECTOR
J-29337	FORWARD & DIRECT CLUTCH UNIT FIXTURE
J-8763-02	HOLDING FIXTURE
J-3289-20	HOLDING FIXTURE BASE
J-25359-3	#27 TORX BIT
J-26744-A	SEAL INSTALLER
J-21426	REAR OIL SEAL INSTALLER
J-23327	CLUTCH SPRING COMPRESSOR
J-25010	DIRECT CLUTCH SEAL PROTECTOR
J-25011	REVERSE CLUTCH SEAL PROTECTOR
J-25014	INTERMEDIATE BAND APPLY PIN GAGE
J-25015	OIL PUMP BODY AND COVER ALIGNMENT BAND
J-25016	FRONT OIL PUMP SEAL INSTALLER
J-25018-A	FORWARD CLUTCH SPRING COMPRESSOR ADAPTER
J-25022	OIL PUMP END-PLAY CHECKING FIXTURE ADAPTER
J-25024	FORWARD CLUTCH SPRING COMPRESSOR
J-25025-A	ALIGNMENT PIN & STUD SET
J-28542	REVERSE CLUTCH HOUSING INSTALLER & REMOVER
J-29060	TORQUE CONVERTER CLUTCH END-PLAY FIXTURE
J-7004	SLIDE HAMMER
J-8001	DIAL INDICATOR SET
or	
J-26900-12	DIAL INDICATOR SET
J-8092	DRIVER HANDLE
J-29696	TURBINE SHAFT SEAL INSTALLER

STANDARD TOOLS

- SPEED HANDLE WRENCH, 3/8" DRIVE
- 10mm, 13mm & 24mm SOCKETS, 3/8" DRIVE
- SMALL FLAT EDGE SCREWDRIVER & LONG FLAT EDGE SCREWDRIVER
- PLASTIC OR RUBBER HAMMER
- NO. 4 EASY OUT OR EQUIVALENT
- "T" HANDLE TAP WRENCH
- 3mm (1/8"), 5mm (3/16") & 6.4mm (1/4") PUNCH
- FEELER GAGE FROM 0.04mm - 2.40mm
- EXPANDING TYPE SNAP RING PLIERS
- CONTRACTING TYPE SNAP RING PLIERS
- NEEDLE NOSE PLIERS
- NEWTON METER (INCH POUND & FOOT POUND) TORQUE WRENCH
- #49 DRILL
- 300mm (12") SCALE
- PLIERS

HH0138200-4R

Figure 133 Special Tools

ALL PAGE REFERENCES IN THIS SUPPLEMENT REFER TO THE 1989 PONTIAC FIREBIRD SERVICE MANUAL, EXCEPT WHERE NOTED OTHERWISE.

SECTION 8A

ELECTRICAL DIAGNOSIS

PONTIAC "F"

Cell	
1	Introduction
2	Symbols
4	Troubleshooting Tests
5	Repair Procedures
10	Power Distribution
11	Fuse Block Details
14	Ground Distribution
23	Multi-Port Fuel Injection
30	Starter and Charging System
31	Cooling Fans
33	Vehicle Speed Sensor
34	Cruise Control
63	Air Conditioning: Blower Controls
64	Air Conditioning: Compressor Controls
81	Instrument Panel: Gages Cluster
91	Wiper/Washer: Pulse
200	Component Locations List
201	Component Location Views
202	Connector Face Views
203	Harness Routing Views

DIAGNOSTIC INFORMATION

This manual contains the following kinds of diagnostic information:

- Electrical Schematics
- Component Location Lists
- Harness Connector Faces
- Troubleshooting Hints
- System Checks
- System Diagnoses
- Circuit Operation Descriptions
- Harness Routing Views
- Input Tests (with built-in self-diagnostic system)

Using these elements together will make electrical troubleshooting faster and easier. Each element is described below.

The **Electrical Schematic** should always be your starting point in using this Electrical Troubleshooting Manual. The schematic shows the electrical current paths when a circuit is operating properly. It is essential to understand how a circuit *should* work before trying to figure out why it doesn't.

The **Component Location List** helps you find where the parts of a circuit are in a vehicle. A brief statement of the location is given and also a reference to a drawing that shows the component and its connecting wires. These **Component Location Views** are in cell 201.

The **Harness Connector Faces** show the cavity or terminal locations in all the multi-pin connectors shown in the schematic. Together with the wire colors and terminals given in the schematic, they help you locate test points. The drawings show the connector faces you see after the harness connector has been disconnected from a component. When more than one connector is connected to a component the connectors are all shown together.

The **Troubleshooting Hints** offer short-cuts or checks to help you determine the cause of a complaint. They are not intended to be a rigid procedure for solving an electrical situation. Rather, Troubleshooting Hints represent a common-sense approach, based on an understanding of the circuit.

The **System Check** gives a summary of how the circuit should be operated and what should happen. This is especially important when you are working on a new system. This information is generally supplied in table form. In the first column the various control settings are listed, and in the second column the proper operation of the circuit is described. The System Check will help you identify symptoms that will lead you to diagnose the complaint and confirm the system after repair.

The **System Diagnosis** provides a procedure to follow that will locate a faulty condition in a circuit. If your own knowledge of the system and the Troubleshooting Hints have not produced a quick fix, follow the System Diagnosis. All procedures are based on symptoms that lead to Test Tables. An example of a commonly used type of table is given in figure 1 (facing page) with an explanation of each of its parts. These tables will assist you in locating the condition quickly.

The **Circuit Operation** will help you to understand the circuit. It describes the components and how the circuit works.

Harness Routing Views are found in cell 203. These views show routing of the major wiring harnesses and the in-line connectors between the major harnesses. These views will make troubleshooting easier when you are not sure about harness routing.

If the system you are troubleshooting has a built-in self-diagnostic system, the **Input Test** sections permit you to use the Body Computer (BCM) to troubleshoot circuits that interface with the BCM, ECM and IPC. The step-by-step test procedures in cells 300 (ECM Input Tests), 301 (BCM Input Tests), and 302 (Instrument Panel Input Tests) should be used after a circuit problem is isolated by using the System Diagnosis. The System Diagnosis procedures direct you to the proper Diagnostic Test procedure.

PAGE NUMBER

This section is organized into cells with most cells containing a circuit schematic and the text for that circuit. This makes the section easy to use, since the page number for a schematic will normally stay the same year after year, and it will also be the same in all the GM publications about that circuit. For example, the Cruise Control schematics will always be the first pages of cell 34 (pages 34-0, 34-1). The other information for Cruise Control follows them on pages 34-2, 34-3, etc.

Some cells may have more than one circuit schematic, such as Power Distribution, Interior Lights, and Air Conditioning. The circuit schematic you want can be located by using the index, or by a quick look through the related cell.

All the engine circuits for a particular engine VIN type are in the same cell. This makes the cell easy to use, since schematics for other cars are not in your way. The instrument panel schematics are organized similarly. If you are working on a car with a Digital Cluster, only the schematics that apply to that car's Digital Cluster will be in the cell you use. Information on the Indicators (Standard) and Gages Clusters will be in other cells.

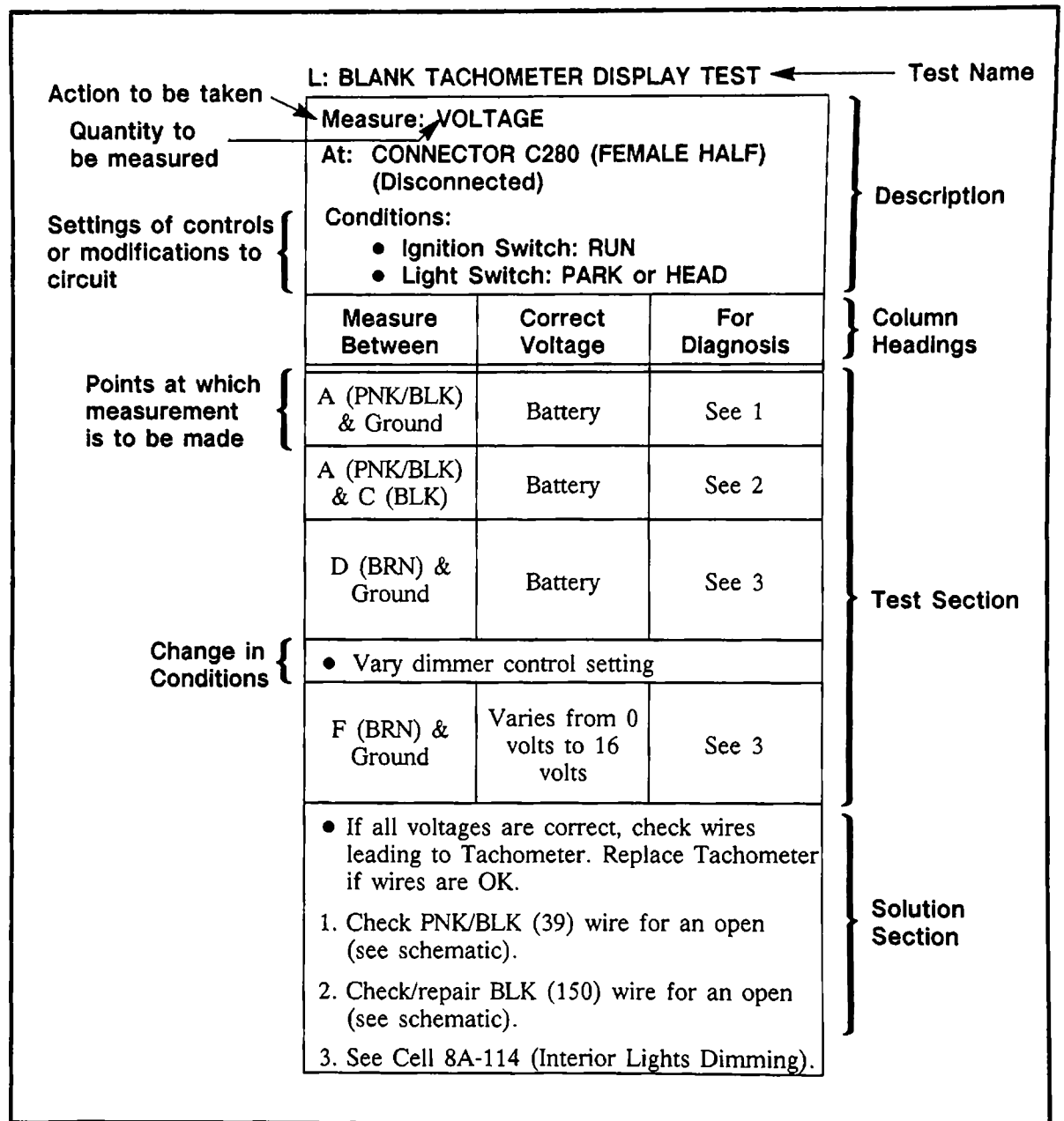

Figure 1 - Typical Test Table

SCHEMATICS

These schematics break the entire electrical system down into individual circuits. You are not distracted by wiring which is not part of the circuit you're working on.

It is important to realize that no attempt is made on the schematic to represent components and wiring as they physically appear on the car. For example, a 4-foot length of wire is treated no differently in a schematic from one which is only a few inches long. The number of cavities for each connector is listed in the Component Location List rather than illustrated. Similarly, switches and other components are shown as simply as possible, with regard to function only.

The following example shows how to read a Horn schematic, see figure 2. Locate the Horn schematic using the Index. The circuit schematic will look somewhat like the one to the right. The schematic is read from top to bottom.

Voltage is applied to the Horn Relay at all times. When the relay coil is grounded by closing the Horn Switch, the relay contacts close. When the relay contacts are closed, both the LH and RH Horns are energized.

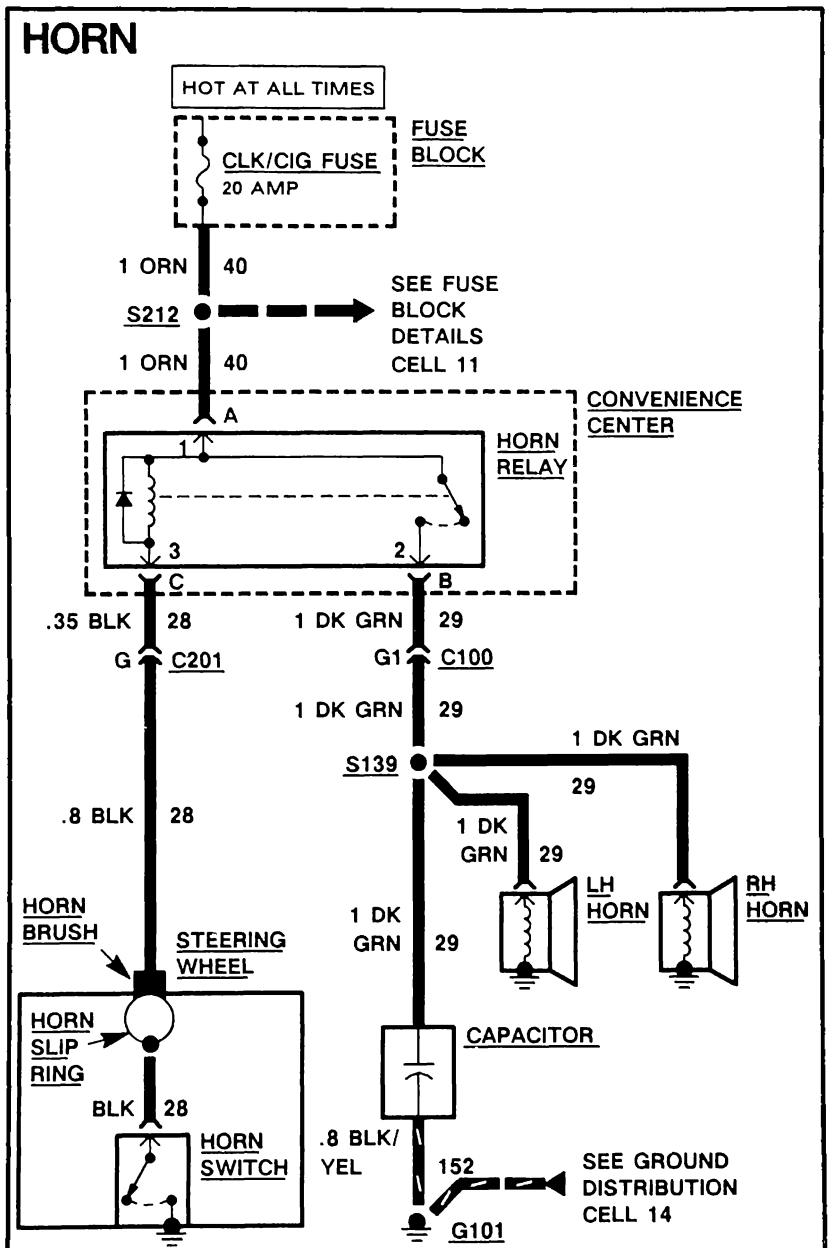

Figure 2 - Typical Horn Schematic

COMPONENT LOCATIONS

When you are ready to locate the schematic components on the car, use the Component Location List, see figure 3.

Listed in the left hand column are the components shown on the schematic. Next to the Convenience Center is the location, "Under LH side of I/P." Reference to LH and RH is made as though the troubleshooter was sitting in the driver's seat. On the same line, in the far right column, is a page-figure reference. In this case, you are directed to figure A on page 201-6.

When connectors are listed, the number of cavities is provided. This represents the total number of cavities in the connector, regardless of how many are actually used. This information is provided to help you identify connectors on the car.

Grounds are listed next in the table. The location description for G101 reads, "LH front of engine compartment, behind headlights panel." You are directed to page 201-8, figure D.

Nearly every component, connector, ground, grommet, or splice shown on a schematic can be pin-pointed visually by using the Component Location Views' figures.

COMPONENT LOCATION		Page-Figure
COMPONENTS		
Convenience Center	Under LH side of I/P	201-6-A
Fuse Block	Under LH side of I/P	201-6-A
Horn Brush/Slip Ring	Under steering wheel	201-5-E
Horn Switch	Under steering wheel	201-5-E
CONNECTORS		
C100 (46 cavities)	LH side of dash	201-5-B
C201 (11 cavities)	Under LH side of I/P, near C100	201-5-F
GROUNDS		
G101	LH front of engine compartment, behind headlights panel	201-8-D
SPLICES		
S139	Front lights harness, behind LH front light panel	201-8-C
S212	I/P harness, behind I/P, above steering column	201-6-B

Figure 3 – Typical Entries in The Component Location List

HARNESS CONNECTOR FACES

The connectors, see figure 4, are labeled with the component they are connected to, or the connector number from the schematic where they appear, and their color. The identifying number is for reference only; it is not the connector part number. For in-line connectors, the half shown is usually the Socket Half. If both views are shown, the other half is the Pin Half.

If you need to backprobe a connector while it is on the component, the order of the terminals must be mentally reversed. The wire color is a help in this situation. If there is more than one wire of the same color, you may need to locate a test point from its terminal number. A useful trick is to imagine that you are probing a terminal from behind the page you are looking at. Then mentally locate that terminal with respect to the keyway or other reference mark.

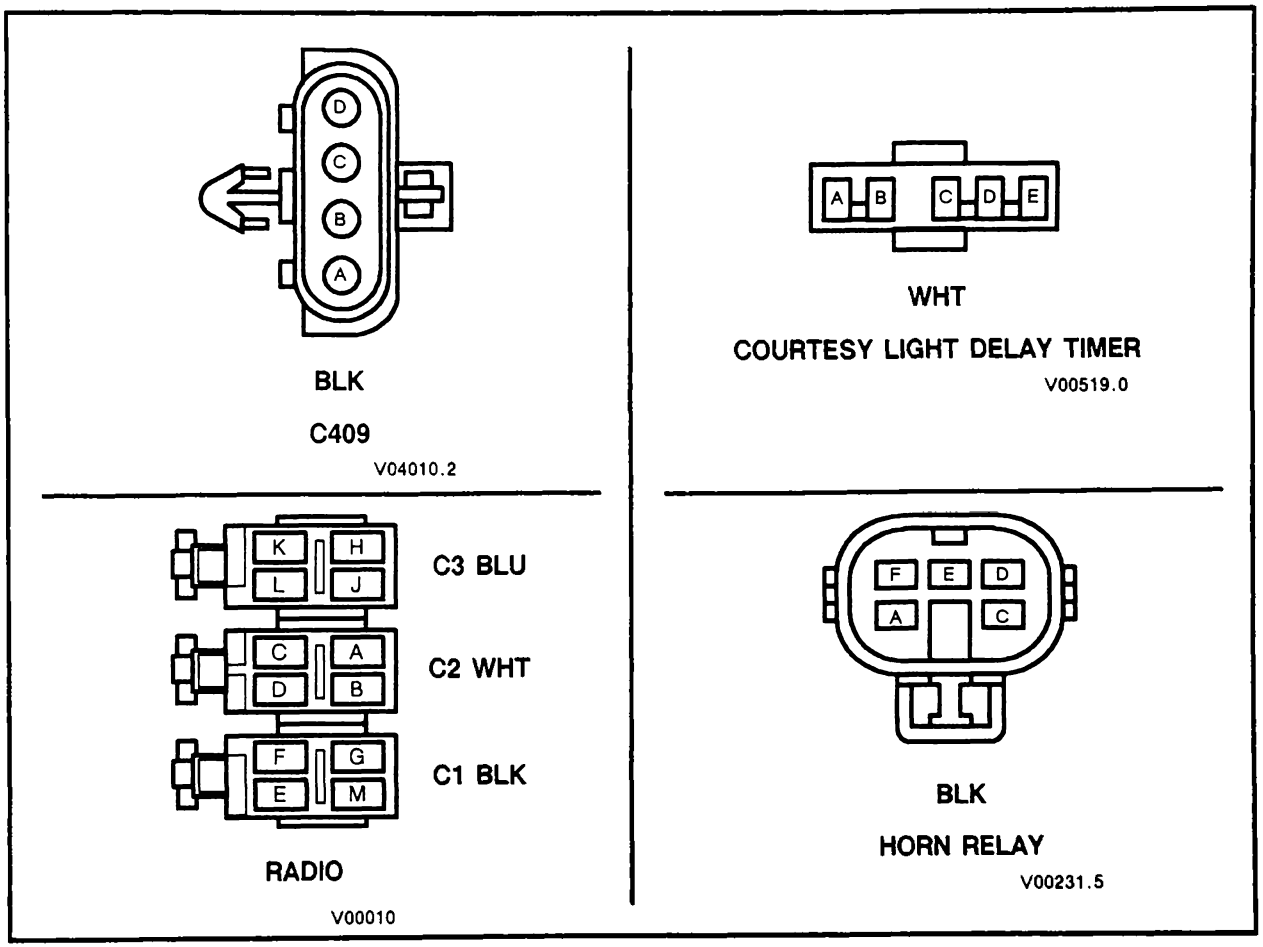

Figure 4 - Typical Harness Connector Faces

OTHER INFORMATION

Body Part Names

Refer to figure 5 for correct body part names.

VIN References

If schematics for more than one variation of an engine type - V6, for example - are shown, then the schematics will be labeled with VIN designations to distinguish the variations.

Service Parts Identification Label

To aid service and parts personnel in identifying options and parts originally installed, a Service Parts Identification Label has been placed in the car. See the General Information Section 0A of the Chassis Service Manual for the location of the label and the definition of the option codes.

Abbreviations

A/C - Air Conditioning

BCM - Body Computer Module

ECM - Electronic Control Module or Engine Control Module

I/P - Instrument Panel

RH - Right Hand, as seen from driver's seat

LH - Left Hand

Not Used - The connector cavity has no function.

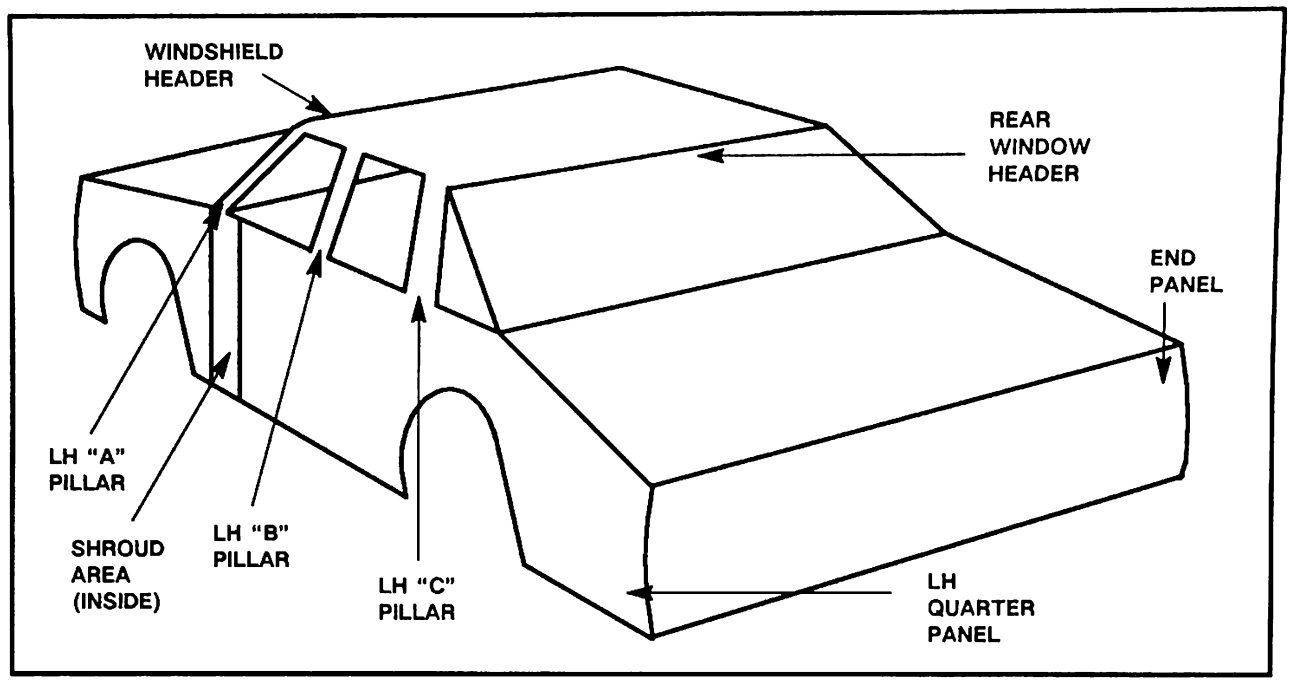

Figure 5 - Body Part Names

POWER DISTRIBUTION

The Power Distribution schematic shows the wiring from the Battery and Generator to the Starter Solenoid, Fuse Block, Ignition Switch and Light Switch. The first component after a Fusible Link is also shown. In certain instances, the first component after a Fuse Block fuse and Light Switch is also shown.

The Power Distribution schematic refers to Fuse Block Details and Light Switch Details schematics. By using these three (3) schematics, power distribution wiring can be followed from the Battery and Generator to the first component after a Fusible Link, Fuse and Light Switch. The ability to follow the power distribution wiring to the first component in each circuit is extremely helpful in locating short circuits which cause fusible links and fuses to open.

Figure 6 is a sample Power Distribution schematic. It shows how voltage is applied from the positive Battery terminal to the various circuits on the car. For example, Battery voltage is applied to the Starter Solenoid, Fusible Link D, the RED wire and connector C100 to Fuse 1 and Fuse 2 in the Fuse Block and the Light Switch in the LH Pod. These fuses are said to be "Hot At All Times", since Battery voltage is always applied to them.

Notice that Battery voltage is also applied to Fusible Link F and the RED wire to the Coolant Fan Relay.

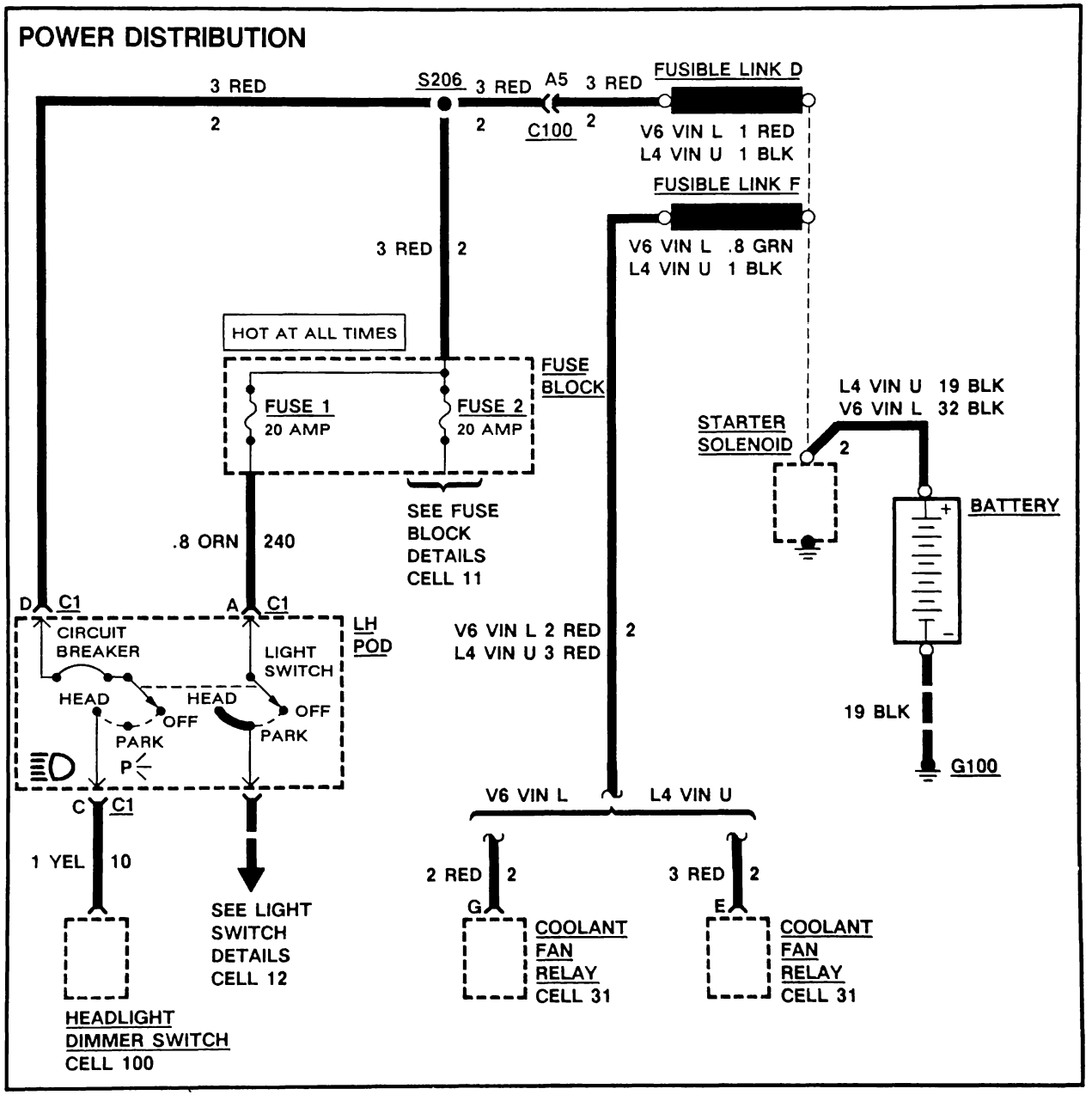

Figure 6 – Typical Power Distribution Schematic

FUSE BLOCK DETAILS

The Fuse Block Details schematic shows all the wiring between a fuse and the components connected to the output of the fuse, see figure 7. In certain instances where space permits, this detail is shown on the Power Distribution schematic. The Fuse Block Details schematic is extremely helpful in locating a short circuit that causes a fuse to open.

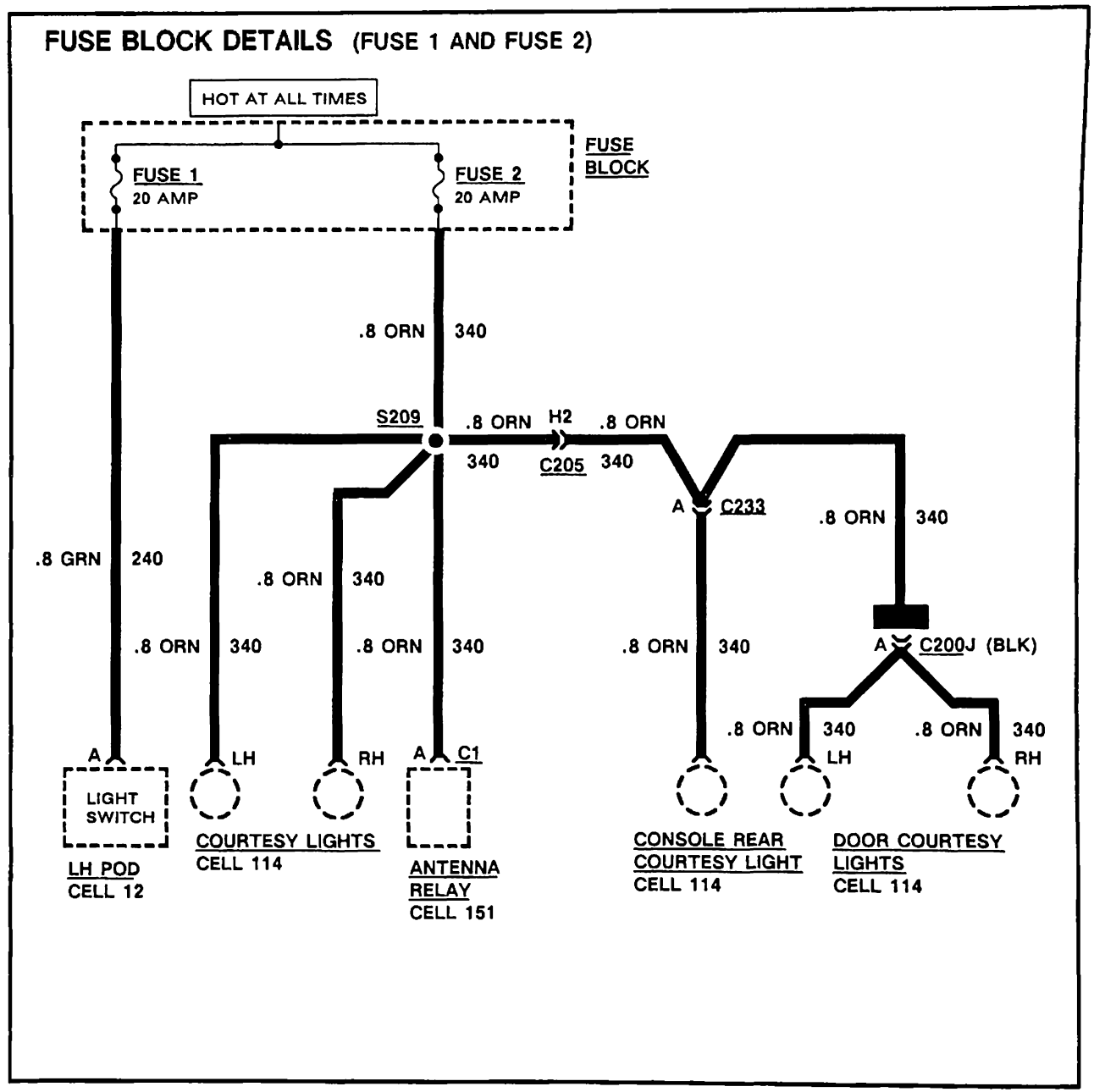

Figure 7 - Typical Fuse Block Details Schematic

LIGHT SWITCH DETAILS

The Light Switch Details schematic shows the wiring between the Light Switch and the components connected to the output of the Light Switch, see figure 8. In certain instances where space permits, some of this detail may be shown on the Power Distribution schematic. The Light Switch Details schematic helps you understand the many wires that come from the Light Switch. This schematic is also helpful in locating a short circuit that causes the fuse ahead of the Light Switch to open.

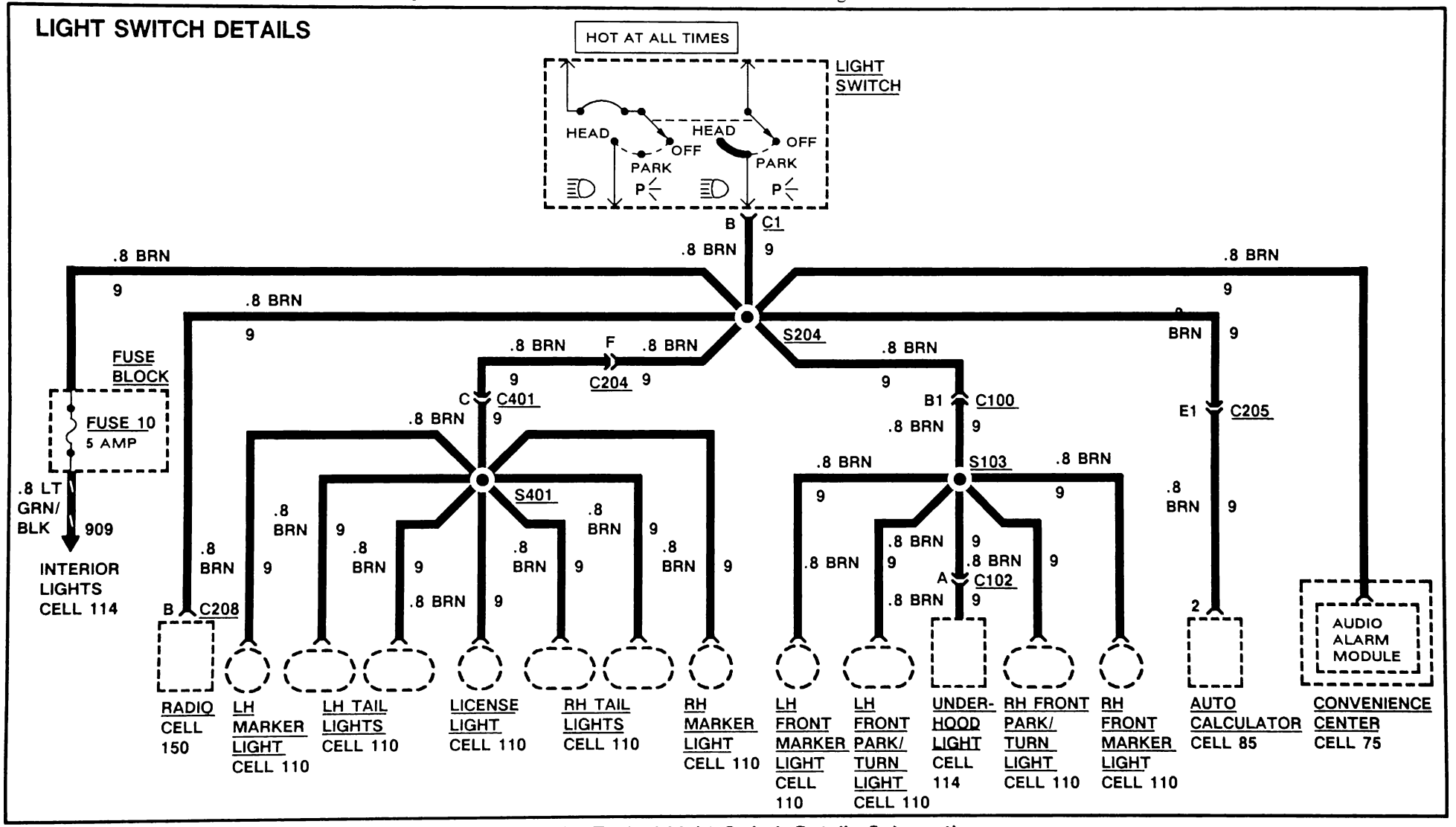

Figure 8 - Typical Light Switch Details Schematic

GROUND DISTRIBUTION

Figure 9 is a sample Ground Distribution schematic for the Headlights. It shows exactly which components share each ground. This information can often be a time-saver when troubleshooting ground circuits.

For example, if both Headlights and the Park/Turn Light on one side are all out, you could suspect an open in their common ground wire or the ground connection itself. On the other hand, if one of the lights works, you know that the ground and the wire up to the splice are good. You have learned this just by inspecting the schematic and knowing the vehicle's symptoms. No actual work on the lighting system was needed.

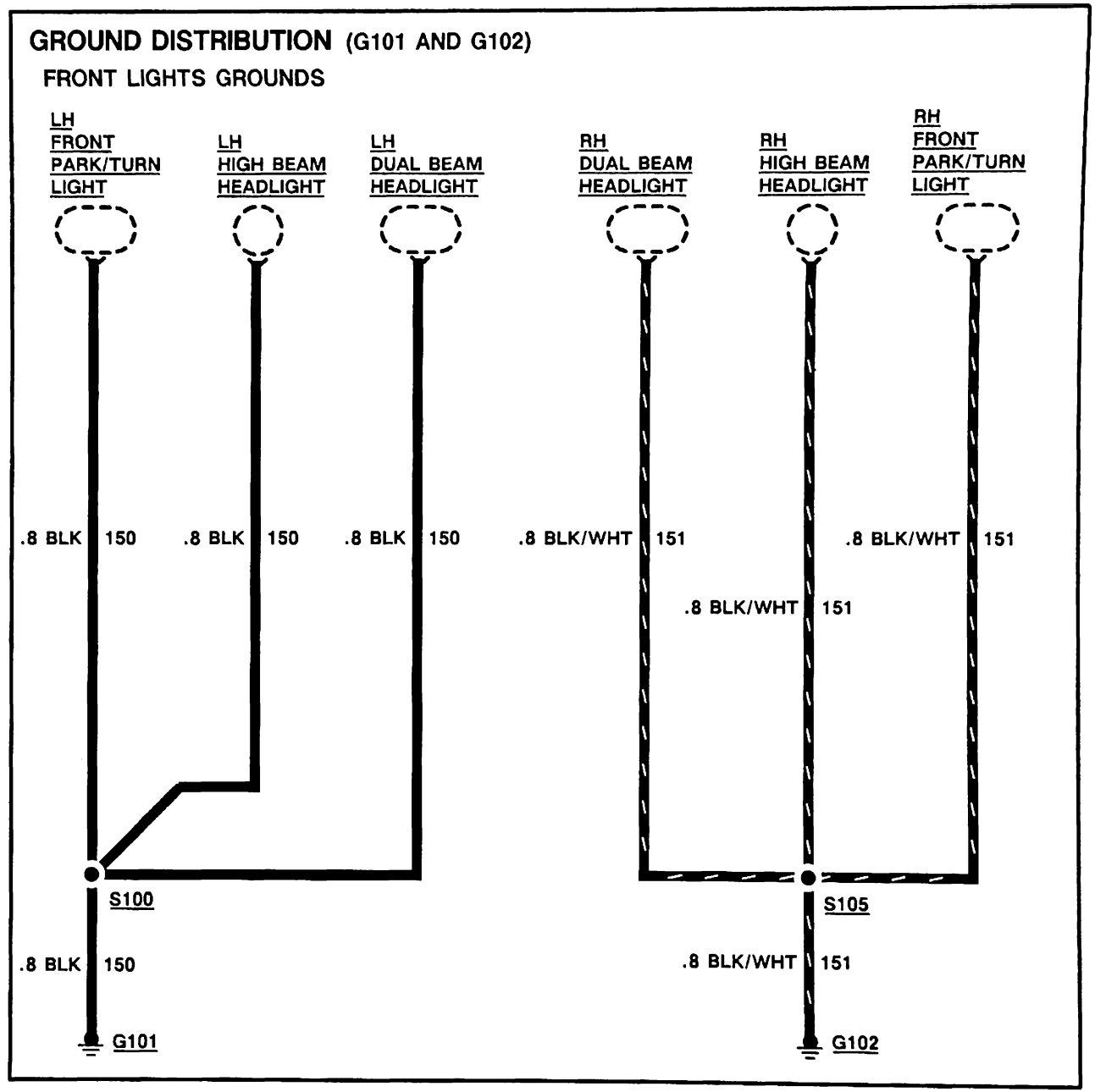

Figure 9 – Typical Ground Distribution Schematic

SYMBOLS

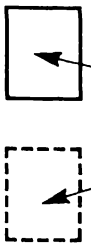

ENTIRE COMPONENT SHOWN

SCREEN USED TO EMPHASIZE COMPONENT

PART OF A COMPONENT SHOWN

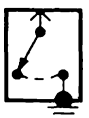

PARK BRAKE SWITCH

CLOSED WITH PARKING BRAKE ON

NAME OF COMPONENT

DETAILS ABOUT COMPONENT OR ITS OPERATION

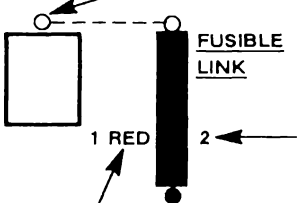

FUSIBLE LINK CONNECTS TO SCREW TERMINAL (SHOWN SEPARATED)

CIRCUIT NUMBER

WIRE SIZE AND INSULATION COLOR

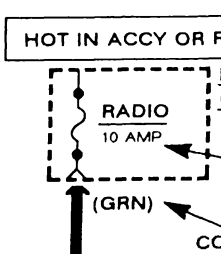

INDICATES POWER IS SUPPLIED WITH IGNITION SWITCH IN ACCY AND RUN POSITIONS

LABEL OF FUSE BLOCK CONNECTOR CAVITY

COLOR OF FUSE BLOCK CONNECTOR

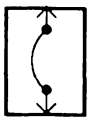

CIRCUIT BREAKER

FEMALE TERMINAL

CONNECTOR IS NUMBERED

MALE TERMINAL

CONNECTOR ATTACHED TO COMPONENT

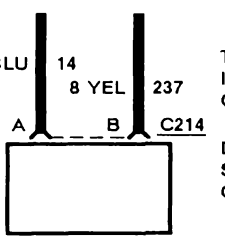

TWO TERMINALS IN SAME CONNECTOR

DASHED LINE SHOWS PHYSICAL CONNECTION

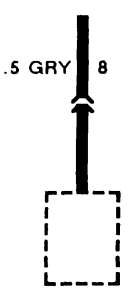

CONNECTOR ON COMPONENT LEAD (PIGTAIL)

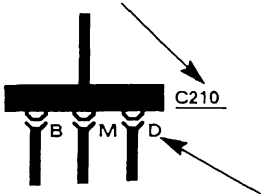

CONNECTOR NUMBER

3 CONNECTORS ARE SHOWN CONNECTED TOGETHER AT A JUNCTION BLOCK. FOURTH WIRE IS SOLDERED TO COMMON CONNECTION ON BLOCK

LETTERS FOR EACH CAVITY

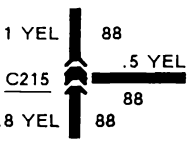

3 WIRES ARE SHOWN CONNECTED TOGETHER WITH A PIGGYBACK CONNECTOR

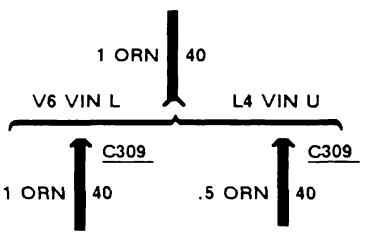

WIRE CHOICES FOR OPTIONS OR DIFFERENT MODELS ARE SHOWN AND LABELED

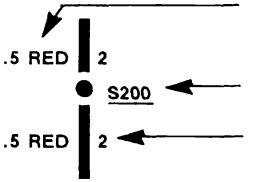

WIRE SIZE AND INSULATION COLOR ARE LABELED

SPLICE IS NUMBERED

CIRCUIT NUMBER IS SHOWN TO HELP IN TRACING CIRCUITS

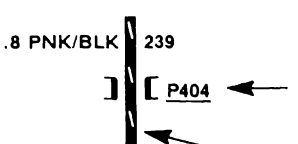

GROMMET IS NUMBERED

WIRE INSULATION IS ONE COLOR WITH ANOTHER COLOR STRIPE

SYMBOLS

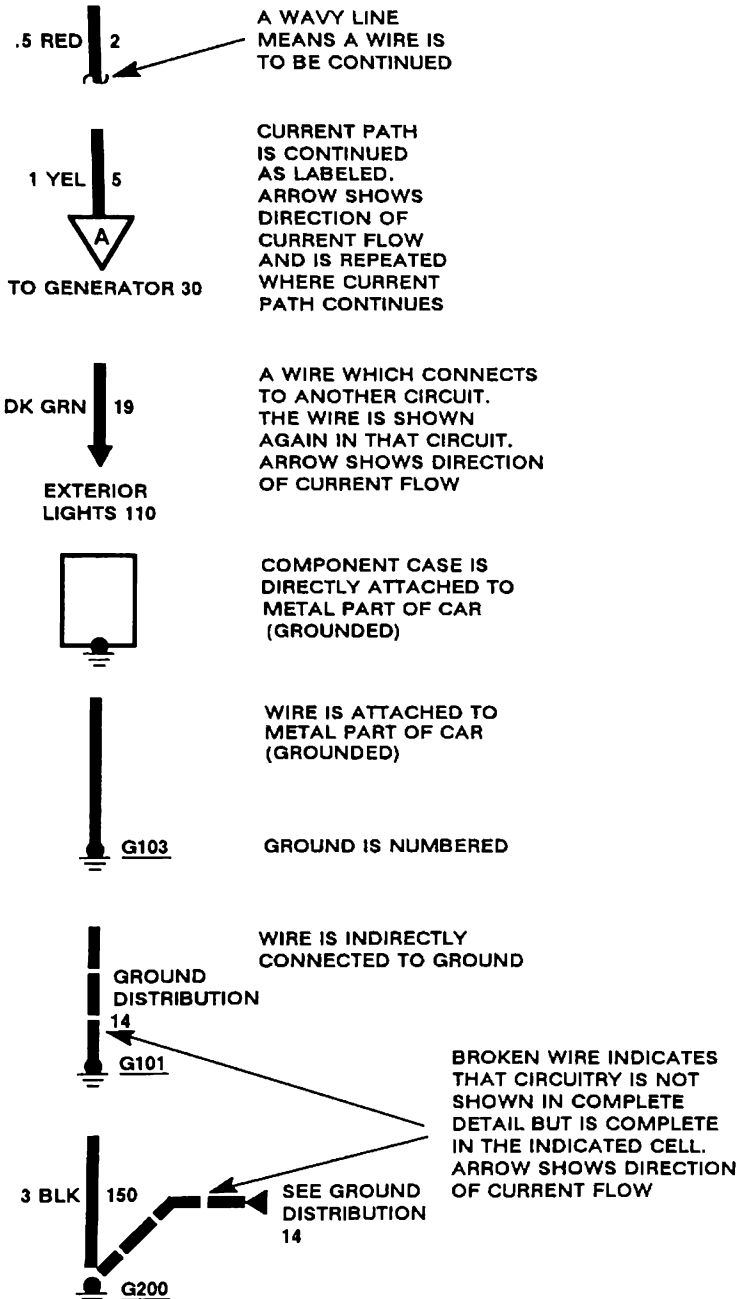
.5 RED 2
A WAVY LINE MEANS A WIRE IS TO BE CONTINUED
1 YEL 5
A
TO GENERATOR 30
CURRENT PATH IS CONTINUED AS LABELED. ARROW SHOWS DIRECTION OF CURRENT FLOW AND IS REPEATED WHERE CURRENT PATH CONTINUES
1 DK GRN 19
EXTERIOR LIGHTS 110
A WIRE WHICH CONNECTS TO ANOTHER CIRCUIT. THE WIRE IS SHOWN AGAIN IN THAT CIRCUIT. ARROW SHOWS DIRECTION OF CURRENT FLOW
COMPONENT CASE IS DIRECTLY ATTACHED TO METAL PART OF CAR (GROUNDED)
WIRE IS ATTACHED TO METAL PART OF CAR (GROUNDED)
G103
GROUND IS NUMBERED
WIRE IS INDIRECTLY CONNECTED TO GROUND
GROUND DISTRIBUTION 14
G101
BROKEN WIRE INDICATES THAT CIRCUITRY IS NOT SHOWN IN COMPLETE DETAIL BUT IS COMPLETE IN THE INDICATED CELL. ARROW SHOWS DIRECTION OF CURRENT FLOW
3 BLK 150
SEE GROUND DISTRIBUTION 14
G200

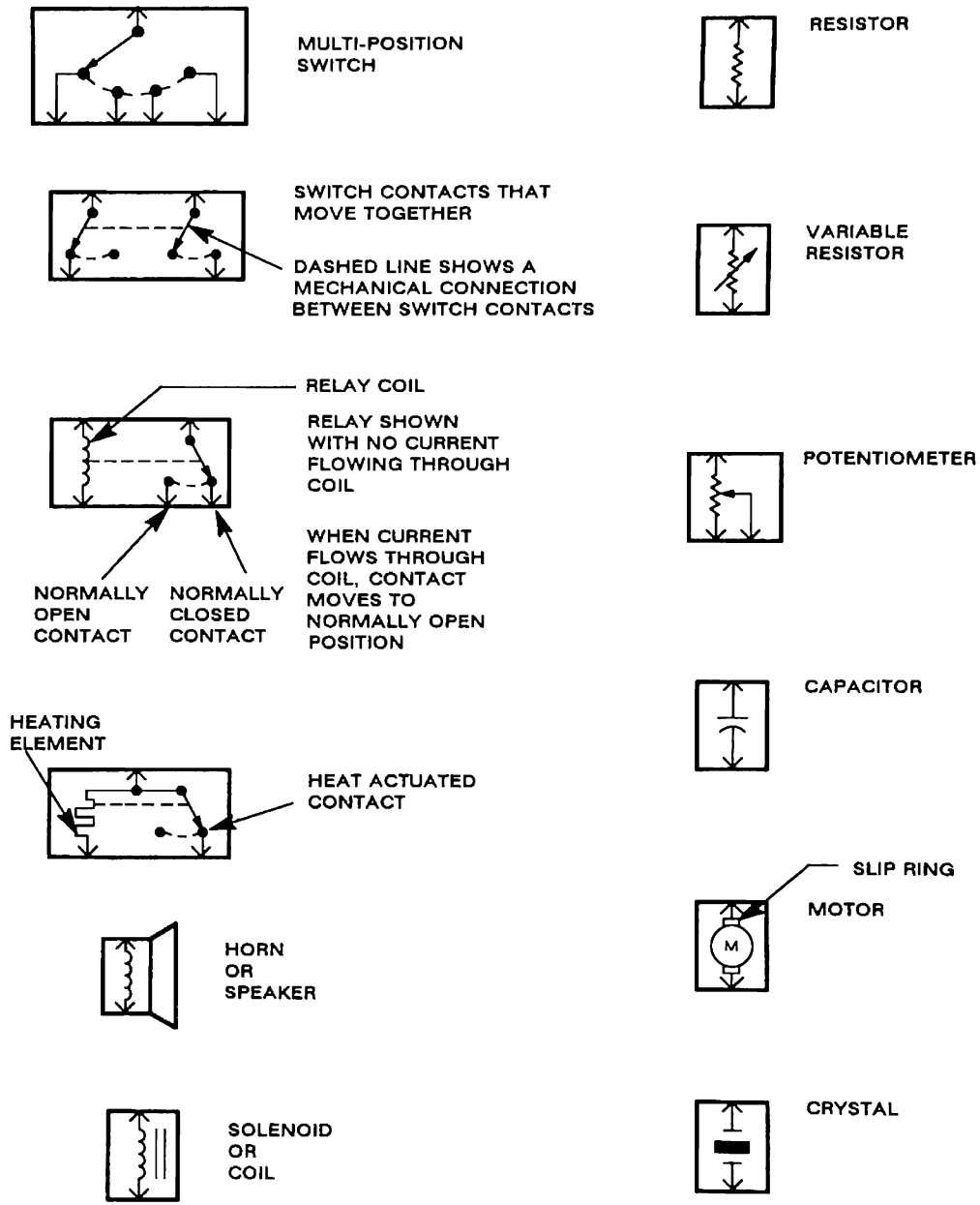
MULTI-POSITION SWITCH
SWITCH CONTACTS THAT MOVE TOGETHER
DASHED LINE SHOWS A MECHANICAL CONNECTION BETWEEN SWITCH CONTACTS
RELAY COIL
RELAY SHOWN WITH NO CURRENT FLOWING THROUGH COIL
WHEN CURRENT FLOWS THROUGH COIL, CONTACT MOVES TO NORMALLY OPEN POSITION
NORMALLY OPEN CONTACT
NORMALLY CLOSED CONTACT
HEATING ELEMENT
HEAT ACTUATED CONTACT
HORN OR SPEAKER
SOLENOID OR COIL
RESISTOR
VARIABLE RESISTOR
POTENTIOMETER
CAPACITOR
SLIP RING
MOTOR
M
CRYSTAL

SYMBOLS

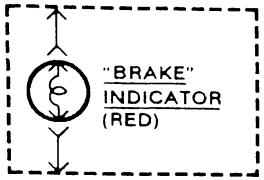

"BRAKE" INDICATOR (RED)

INDICATOR WHICH DISPLAYS THE LIGHTED WORD "BRAKE"

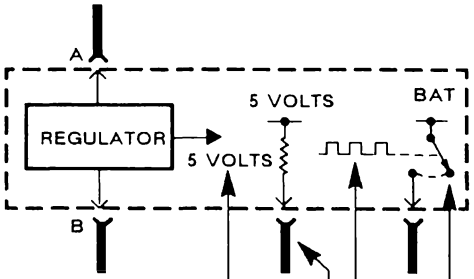

ELECTRONIC CONTROL MODULE (ECM) SOLID STATE

"SOLID STATE" IDENTIFIES MODULE AS ELECTRONIC. SIMPLIFIED COMPONENTS WITHIN THE MODULE SHOW HOW EACH CIRCUIT IS COMPLETED

TRANSISTOR SHOWN AS SWITCH

INDICATES PULSING OUTPUT

WITH NO LOAD ON THIS CIRCUIT, 5 VOLTS WILL BE MEASURED USING A HIGH IMPEDANCE DIGITAL VOLTMETER

5 VOLTS WILL BE PRESENT WHEN BATTERY VOLTAGE IS APPLIED BETWEEN TERMINALS "A" AND "B"

LIGHT EMITTING DIODE

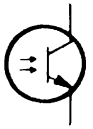

PHOTO SENSITIVE TRANSISTOR

DIODE

CURRENT FLOWS ONLY IN DIRECTION OF ARROW

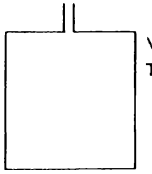

VACUUM TANK

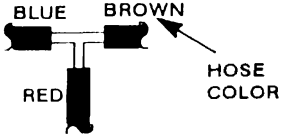

HOSE COLOR

VACUUM JUNCTION

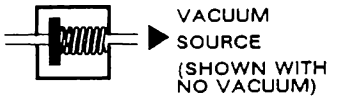

VACUUM SOURCE (SHOWN WITH NO VACUUM)

VACUUM CHECK VALVE

NO FLOW DIRECTION

EASY FLOW DIRECTION

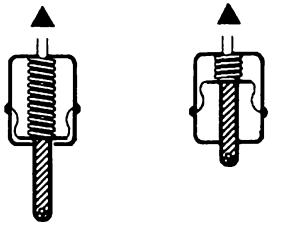

VACUUM ACTUATOR (SINGLE DIAPHRAGM, TWO POSITION)

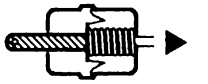

PARTIAL VACUUM

VACUUM ACTUATOR (SERVO, MULTIPLE POSITION)

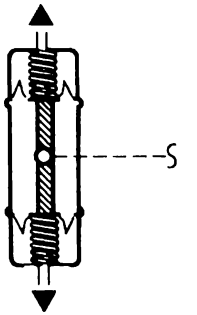

VACUUM ACTUATOR (DOUBLE DIAPHRAGM, THREE POSITION)

SYMBOLS

SOLID STATE SYMBOLS

A group of special symbols is used to represent electronic circuits used in solid state modules. These symbols are greatly simplified versions of the actual circuits. They can be very useful for troubleshooting purposes if properly used. It is important to remember that these symbols apply only to modules with all connectors in place and supply voltages on.

OUTPUTS

The Solid State Switch (Figures 1 and 2) is used to turn on a circuit outside the module. When the switch closes, the voltage or ground shown will be applied to the connected circuit. Additional information about what makes the switch close is often provided. The voltage controlled by the switch may be measured just as if it were a mechanical switch.

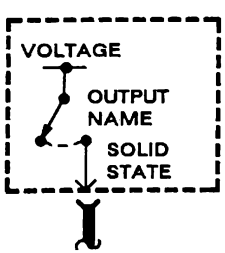

Figure 1

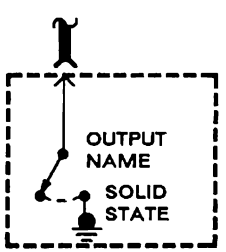

Figure 2

These symbols (Figures 3 and 4) are similar to the Solid State Switch. The pulses represent the rate at which the switch is turned on and off.

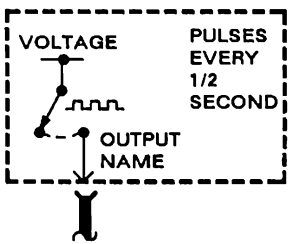

Figure 3

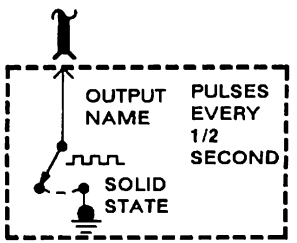

Figure 4

These two symbols (Figures 5 and 6) are special versions of the Solid State Switch. They represent serial data inputs and outputs. Serial data consists of coded groups of voltage pulses transmitted at high speed. These pulses cannot usually be measured with a Digital Voltmeter. There are cases however where procedures in System Diagnosis may describe such measurements. A Scan tool can often read and display this data.

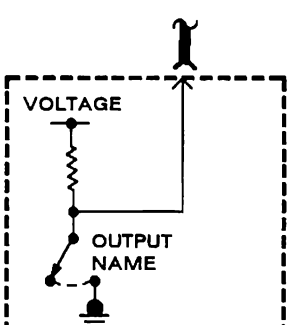

DATA OUTPUT

Figure 5

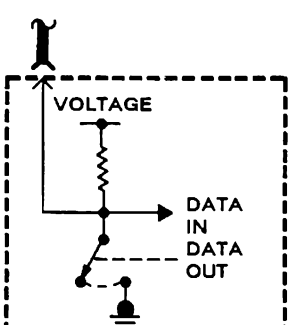

DATA INPUT AND OUTPUT

Figure 6

INPUTS

These symbols (Figures 7 and 8) represent the equivalent circuit at the input terminals of electronic modules. You should not attempt to measure the resistance of these terminals unless instructed to do so by a service procedure. These inputs can be used to check wiring to electronic modules as shown under Troubleshooting Tests (Cell 4).

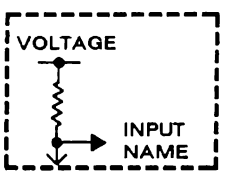

Figure 7

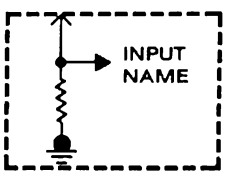

Figure 8

The following four-step troubleshooting procedure is recommended.

Step 1: Check the problem

Perform a System Check to be sure you understand what's wrong. Don't waste time fixing part of the problem! Do not begin disassembly or testing until you have narrowed down the possible causes.

If the system you are troubleshooting has a built-in self-diagnostic system, enter diagnostics and check for trouble codes. Refer to the appropriate section of the Service Manual.

Step 2: Read the Electrical Schematic

Study the schematic. Read the Circuit Operation text if you do not understand how the circuit *should* work. Check circuits that share wiring with the problem circuit. The names of circuits that share the same fuse, ground, switch, etc., are included on each electrical schematic. (Shared circuits are also shown on Power Distribution, Ground Distribution, Fuse Block Details, and Light Switch Details pages.) Try to operate the shared circuits. If these circuits work, then the shared wiring is OK. The cause must be within the wiring used only by the problem circuit. If several circuits fail at the same time, chances are the power (fuse) or ground circuit is faulty.

Step 3: Find the Cause and Repair

- Narrow down the possible causes.
- Use the Troubleshooting Hints.
- Make the necessary measurements as given in the System Diagnosis.

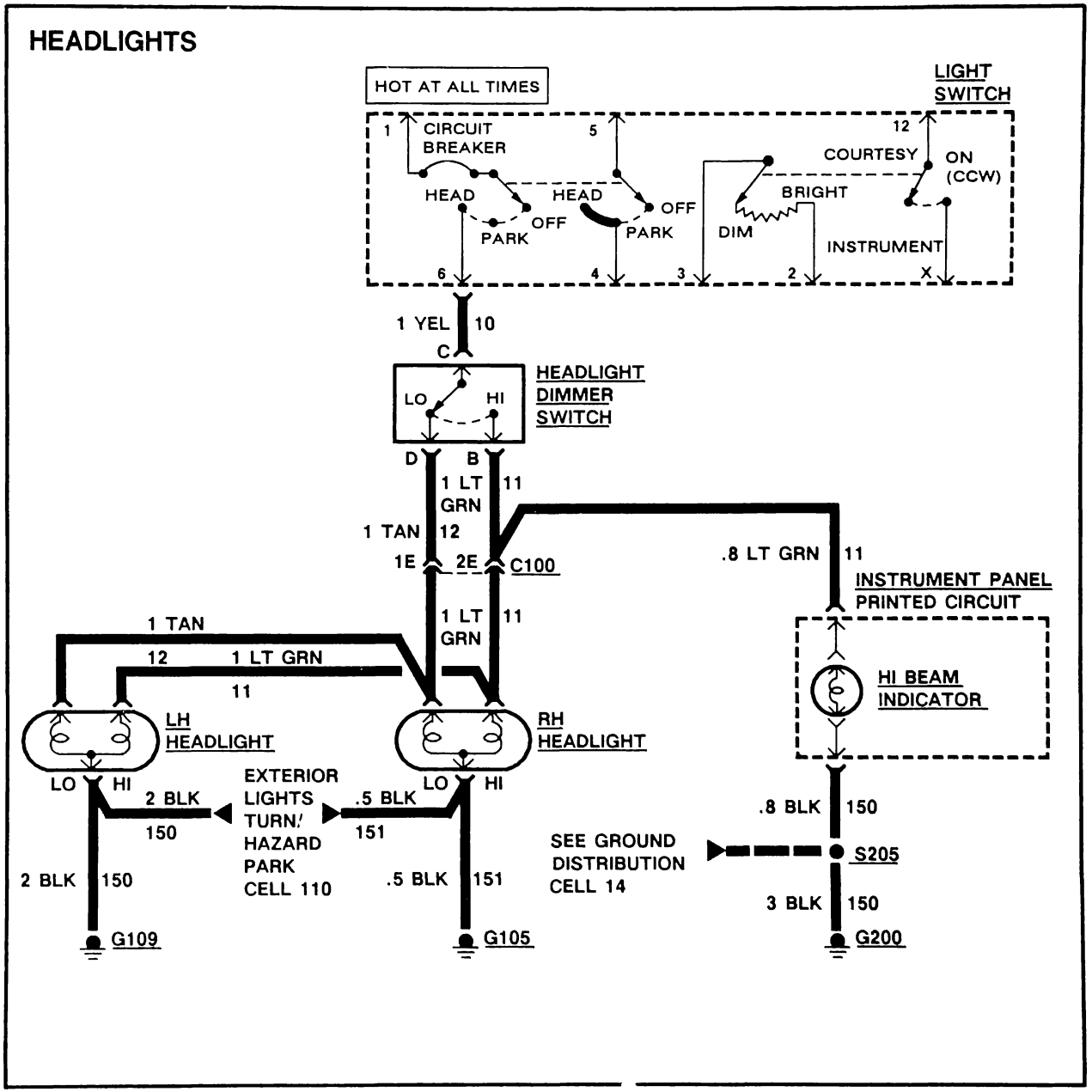

Figure 1 - Typical Headlights Schematic

- Before you replace a component, check power, signal, and ground wires at the component harness connector. If these are OK, the component must be bad.

Step 4: Test the Repair

Repeat the System Check to be sure you have fixed the whole problem.

Example

A customer brings in a car and says that the high beams do not work.

Step 1: Perform a System Check on the Headlights Circuit. You may discover that both low beams operate. In HI, you may notice that the High Beam Indicator comes on, but neither high beam operates.

Step 2: Read the Headlights electrical schematic, see figure 9. This is the step that will save you time and labor. Remember, it is essential to understand how a circuit *should* work, before trying to figure out why it doesn't.

After you understand how the circuit should operate, read the schematic again, this time keeping in mind what you have learned by operating the circuit.

Since both low beams work, you know that the Light Switch, the YEL wire, the Lo contacts of the Headlight Dimmer Switch, terminal 1E of C100, the TAN wires, and grounds G105 and G109 are all good.

Furthermore, since you saw that the High Beam Indicator came on when the Headlight Dimmer Switch was moved to HI, you know that the Hi contacts of the dimmer switch and the LT GRN wire between the dimmer switch and C100 are good.

At this point, you could test for voltage at the RH Headlight with the dimmer switch in HI. However, it is extremely unlikely that the high beam filaments have burned out in *both* headlights, or that *both* headlight connections are bad. The cause must be a bad connection at C100, or a break in the LT GRN wire between C100 and the RH Headlight.

You have quickly narrowed the possible causes down to one specific area, and have *done* absolutely *no* work on the car itself.

Step 3: Find the cause and repair it. Using the Component Location List and the corresponding figure, you can quickly find C100 and the LT GRN wire, locate the exact trouble point, and make the repair.

Step 4: Check the repair by performing a system check on the Headlights circuit. This, of course, means making sure that both high beams, both low beams, and the High Beam Indicator are all working.

Now suppose that the symptoms were different. You may have operated the Headlights and found that the low beams were working, but neither the high beams nor the High Beam Indicator were working. Looking at the schematic, you might conclude that it is unlikely that both high beam filaments and the High Beam Indicator have all burned out at once. The cause is probably the dimmer switch or its connector.

Electrical troubleshooting requires the use of common electrical test equipment.

TEST LIGHT/VOLTMETER

Use a test light to check for voltage. A Test Light (BT-7905 or equivalent) is made up of a 12-Volt light bulb with a pair of leads attached. After grounding one lead, touch the other lead to various points along the circuit where voltage should be present. When the bulb goes on, there is voltage at the point being tested.

A voltmeter can be used instead of a test light. While a test light shows whether or not voltage is present, a voltmeter indicates how much voltage is present.

An increasing number of circuits include solid state control modules. One example is the Electronic Control Module (ECM) used with Computer Command Control and Electronic Fuel Injection. Voltages in these circuits should be tested only with a 10-megohm or higher impedance digital voltmeter or multimeter (J-29125 or equivalent). Never use a test light on circuits that contain solid state components, since damage to these components may result.

When testing for voltage or continuity at a connection, you do not have to separate the two halves of the connector. Unless you are testing a "weather-pack" connector, you should probe the connector from the back. Always check both sides of the connector. An accumulation of dirt and corrosion between contact surfaces is sometimes a cause of electrical problems.

CONNECTOR TEST ADAPTERS

A connector Adapter Kit is available (J35616) for making tests and measurements at separated connectors. This kit contains an assortment of probes which mate with many of the types of connectors you will see. Avoid using paper clips and other substitutes since they can damage terminals and cause incorrect measurements.

SELF-POWERED TEST LIGHT

Use a self-powered test light (J-21008 or equivalent) to check for continuity. This tool is made up of a light bulb, battery, and two lead s. If the leads are touched together, the bulb will go on.

A self-powered test light is used only on an unpowered circuit. First disconnect the car's battery, or remove the fuse which feeds the circuit you're working on. Select two specific points along the circuit through which there should be continuity. Connect one lead of the self-powered test light to each point. If there is continuity, the test light's circuit will be completed and the bulb will go on.

Never use a self-powered test light on circuits that contain solid state components, since damage to these components may result.

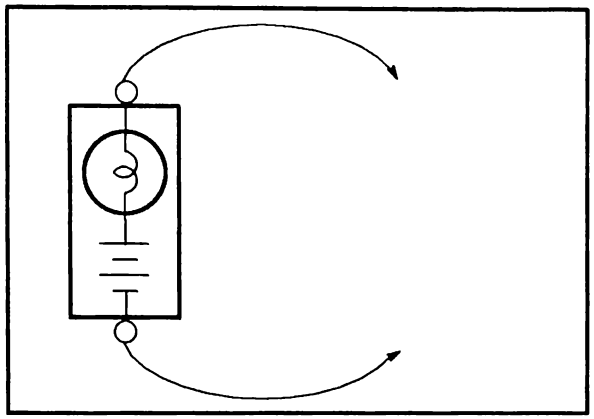

Figure 2 - Self-Powered Test Light

OHMMETER

An ohmmeter can be used instead of a self-powered test light. The ohmmeter shows how much resistance there is between two points along a circuit. Low resistance means good continuity.

Circuits which include any solid state control modules, such as the Electronic Control Module (ECM), should be tested only with a 10-megohm or higher impedance digital multimeter (J-29125 or equivalent).

When measuring resistance with a digital multimeter, the vehicle battery should be disconnected. This will prevent incorrect readings.

Diodes and solid state components in a circuit can cause an ohmmeter to give a false reading. To find out if a component is affecting a measurement, take a reading once, reverse the leads and take a second reading.

If the readings differ, the solid state component is affecting the measurement.

FUSED JUMPER WIRE

A fused jumper is available (J-36169 or equivalent) with small clamp connectors providing adaptation to most connectors without damage. This fused jumper wire is supplied with a 20 amp fuse which may not be suitable for some circuits. Do not use a fuse with a higher rating than the fuse that protects the circuit being tested.

> **CAUTION:** Do not use fused jumper wire in any instance to substitute for inputs or outputs at the ECM (Electronic Control Module), BCM (Body Control Module), or any microprocessor device.

SHORT FINDER

Short Finders are available (J-8681 or equivalent) to locate hidden shorts to ground. The short finder creates a pulsing magnetic field in the shorted circuit and shows you the location of the short through body trim or sheet metal.

FUSE TESTER

A simple tester that indicates a blown fuse is available (J-34764 or equivalent). To check a fuse the tester is applied directly to the fuse in the fuse block. Two probes contact the fuse. The probes are either placed into the slots of a flat fuse or to the metal ends of a glass fuse. With power on, a red LED in the tester lights if the fuse is open. The handle of the tester is a tool for removing either type of fuse.

TROUBLESHOOTING TESTS

TESTING FOR VOLTAGE

1. Connect one lead of a test light to a known good ground. If you are using a voltmeter, be sure it is the voltmeter's negative lead that you have connected to ground.
2. Connect the other lead of the test light or voltmeter to a selected test point (connector or terminal).
3. If the test light glows, there is voltage present. If you are using a voltmeter, note the voltage reading. It should be within one volt of measured battery voltage. A loss of more than one volt indicates a problem.

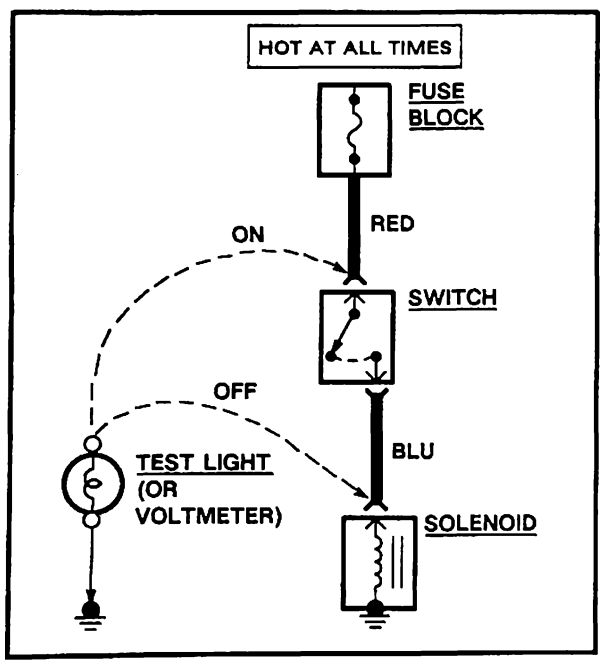

Figure 3 - Voltage Check

4. A quick test of wire continuity can often be made using the input voltages of solid state modules. (See Figure 4)

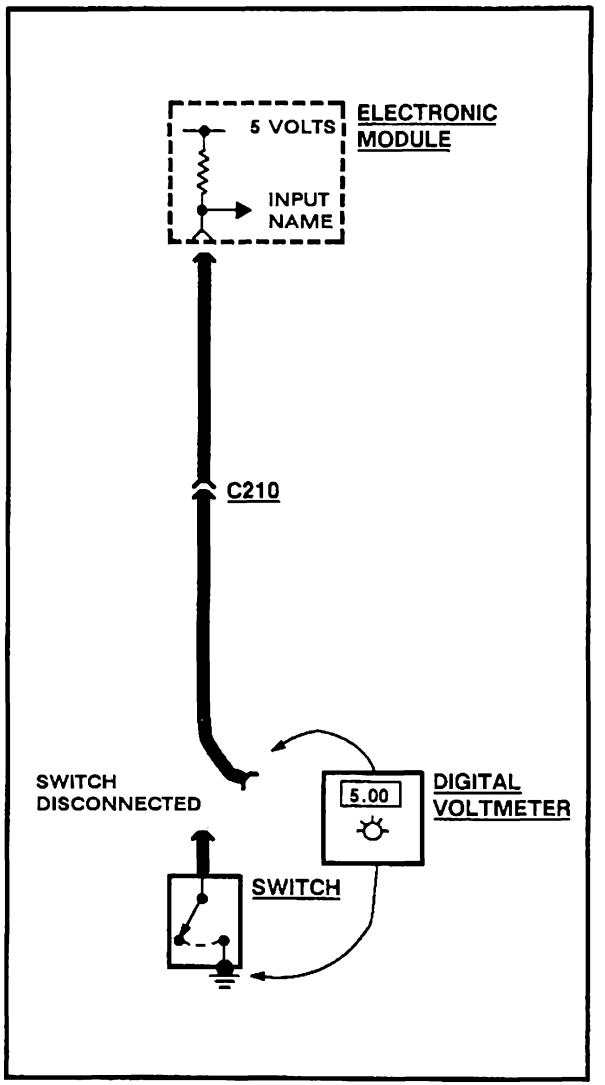

Figure 4

If the continuity of the wire is good, 5 volts will be found at the switch connector. This test can be performed only with a Digital Voltmeter. Analog meters or a Test Lamp *will not work.*

The figure below illustrates the same point with another type of input.

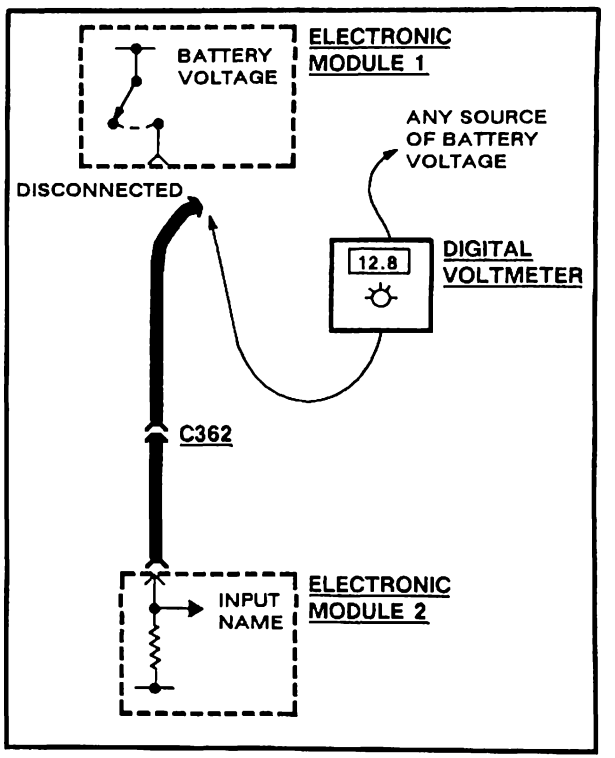

Figure 5

If the continuity of the wire is good, battery voltage will be found between the connector and a source of battery voltage. Again, use only a Digital Voltmeter for this test.

TESTING FOR CONTINUITY

1. Disconnect the car battery.
2. Connect one lead of a self-powered test light or ohmmeter to one end of the part of the circuit you wish to test.
3. Connect the other lead to the other end of the circuit.
4. If the self-powered test light glows, there is continuity. If you are using an ohmmeter, low or no resistance means good continuity.

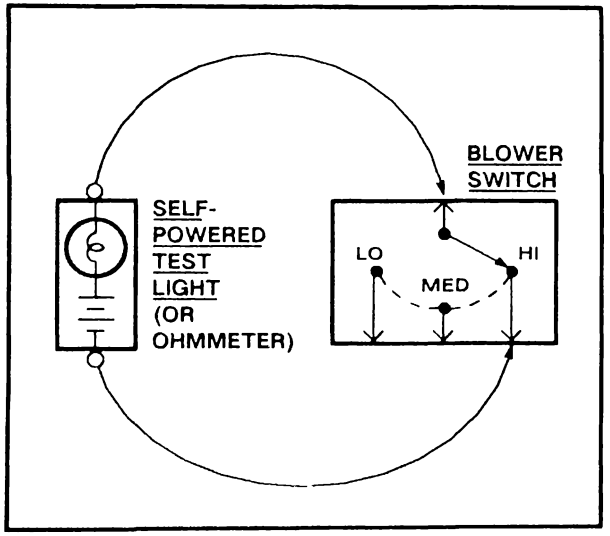

Figure 6 - Continuity Check Through a Switch

TESTING FOR VOLTAGE DROP

This test checks for voltage being lost along a wire, or through a connection or switch.

1. Connect the positive lead of a voltmeter to the end of the wire (or to one side of the connection or switch) which is closer to the Battery.
2. Connect the negative lead to the other end of the wire (or the other side of the connection or switch).
3. Operate the circuit.
4. The voltmeter will show the difference in voltage between the two points. A difference (or drop) of more than one volt indicates a problem.

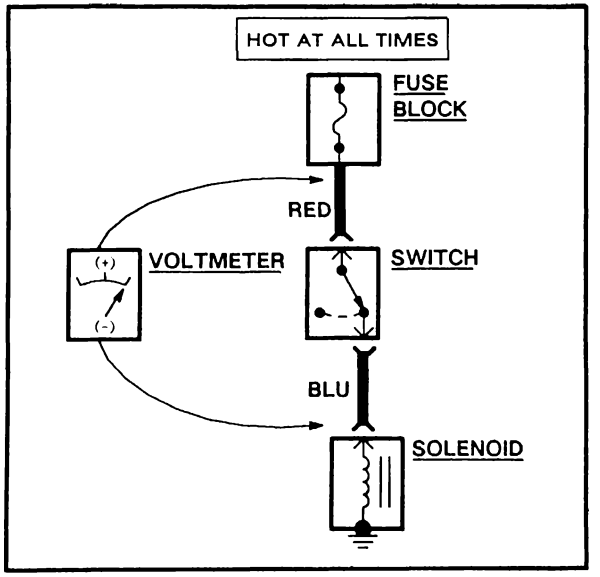

Figure 7 - Voltage Drop Test

TESTING FOR SHORT TO GROUND

With a Test Light or Voltmeter

1. Remove the blown fuse and disconnect the load.
2. Connect a test light or voltmeter across the fuse terminals (be sure that the fuse is powered).
3. Beginning near the fuse block, wiggle the harness from side to side. Continue this at convenient points (about 6 inches apart) while watching the test light or voltmeter.
4. When the test light glows, or the voltmeter registers, there is a short to ground in the wiring near that point.

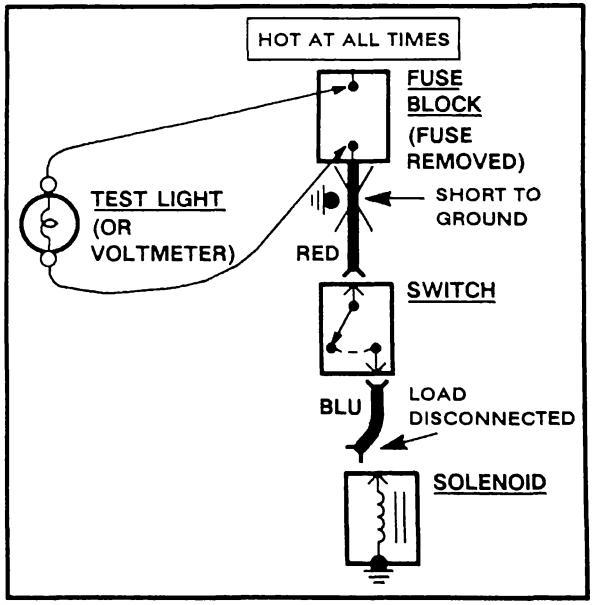

Figure 8 - Testing For Short With Test Light or Voltmeter

With a Self-Powered Test Light or Ohmmeter

1. Remove the blown fuse and disconnect the battery and load.
2. Connect one lead of a self-powered test light or ohmmeter to the fuse terminal on the load-side.
3. Connect the other lead to a known good ground.
4. Beginning near the fuse block, wiggle the harness from side to side. Continue this at convenient points (about 6 inches apart) while watching the self-powered test light or ohmmeter.
5. When the self-powered test light glows, or the ohmmeter registers, there is a short to ground in the wiring near that point.

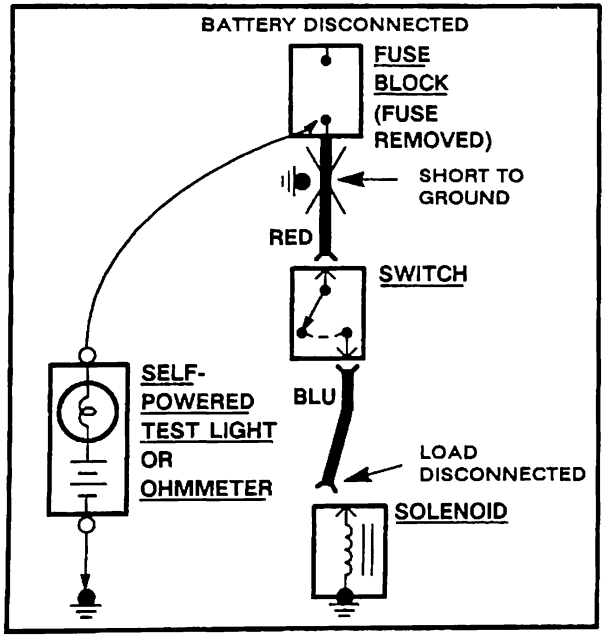

Figure 9 - Testing For Short With Self-Powered Test Light or Ohmmeter

With a Short Finder

1. Remove the blown fuse, leaving the battery connected.
2. Connect the short finder across the fuse terminals.
3. Close all switches in series with the circuit you are troubleshooting.
4. Operate the short finder. The short finder will pulse current to the short. This creates a pulsing magnetic field surrounding the circuit wiring between the fuse block and the short.
5. Beginning at the fuse block, slowly move the short finder meter along the circuit wiring. The meter will show current pulses through sheet metal and body trim. As long as the meter is between the fuse block and the short, the needle will move with each current pulse. When you have moved the meter past the point of the short, the needle will stop moving. Examine the wiring in that area for the short to ground.

Fuses Powering Several Loads

1. Find the schematic in Fuse Block Details (Cell 11) for the fuse that has blown.
2. Open the first connector or switch leading from the fuse to each load.
3. Replace the fuse.
   - If the fuse blows, the short is in the wiring leading to the first connector or switch. Use a test light, meter, or short finder as described above.
   - If the fuse does not blow, go to the next step.
4. Close each connector or switch until the fuse blows to find which circuit the short is in. Connect test lamp, meter, or short finder a the connector to the suspect circuit (disconnected) rather than at the fuse terminals.

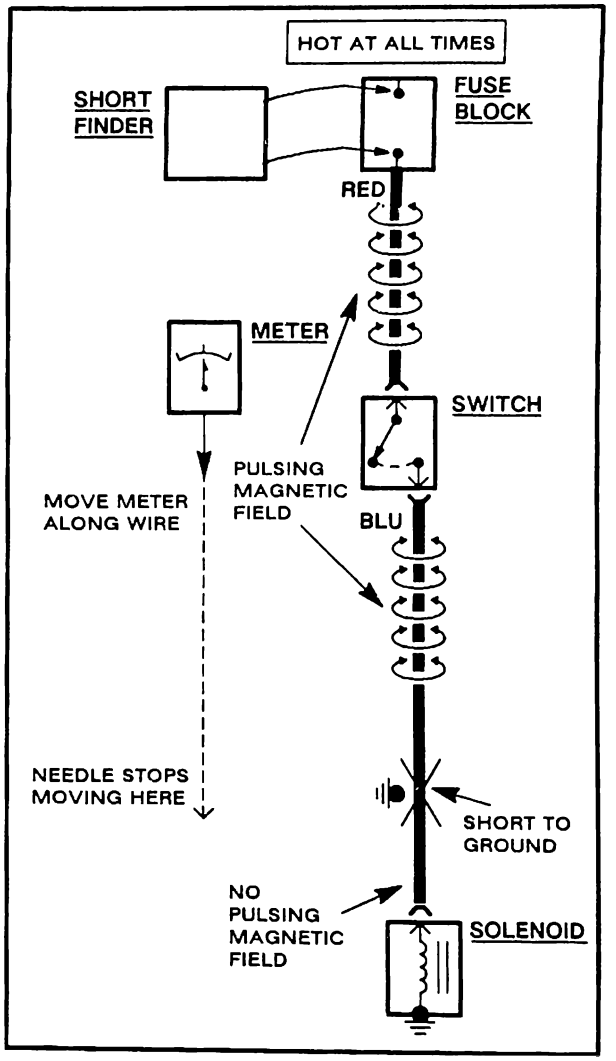

Figure 10 - Finding Short With Short Finder

TESTING FOR CURRENT

To test for current the meter must be connected in series in the circuit. Current measurements always involve a component being removed or disconnected from the circuit. The circuit current flows through the meter, which displays the current in amps or milliamps.

CAUTION: Never use a meter set on a current scale to measure voltage. Severe damage to the meter, the circuit or both will result.

Two commonly used locations for taking current measurements are at a fuse and at the battery.

To measure current in a Windshield Wiper Motor, for instance, the meter should be connected across the fuse terminals, after removing the fuse. The meter can be inserted in any circuit where a single circuit can be temporarily opened to make the measurement. A second example, measuring at a fusible link is illustrated in Figure 12.

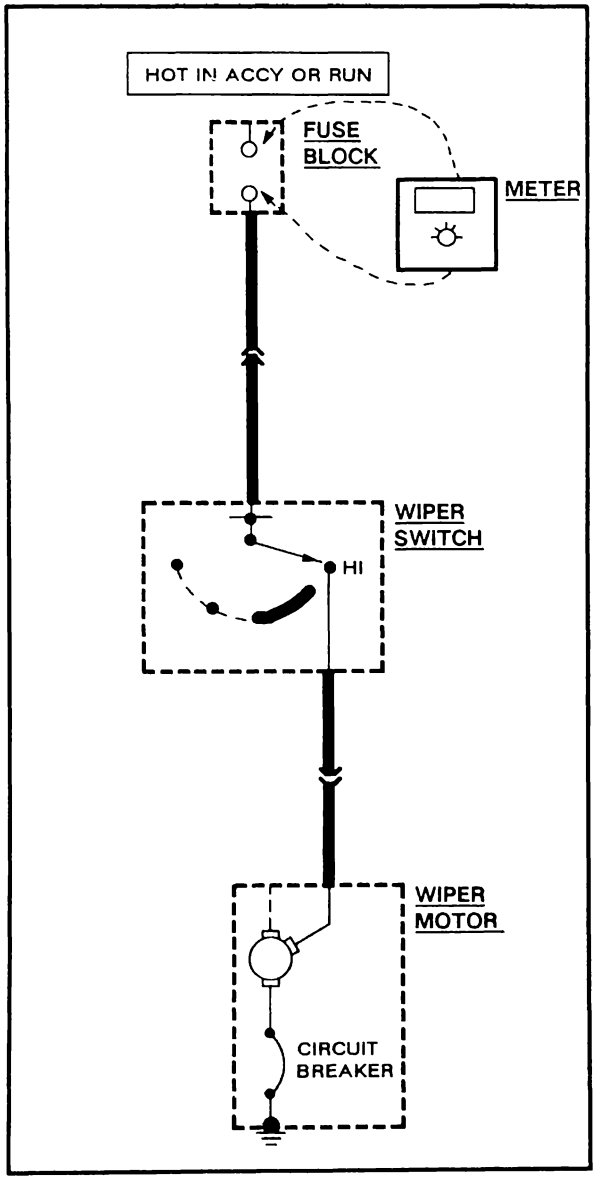

Figure 11

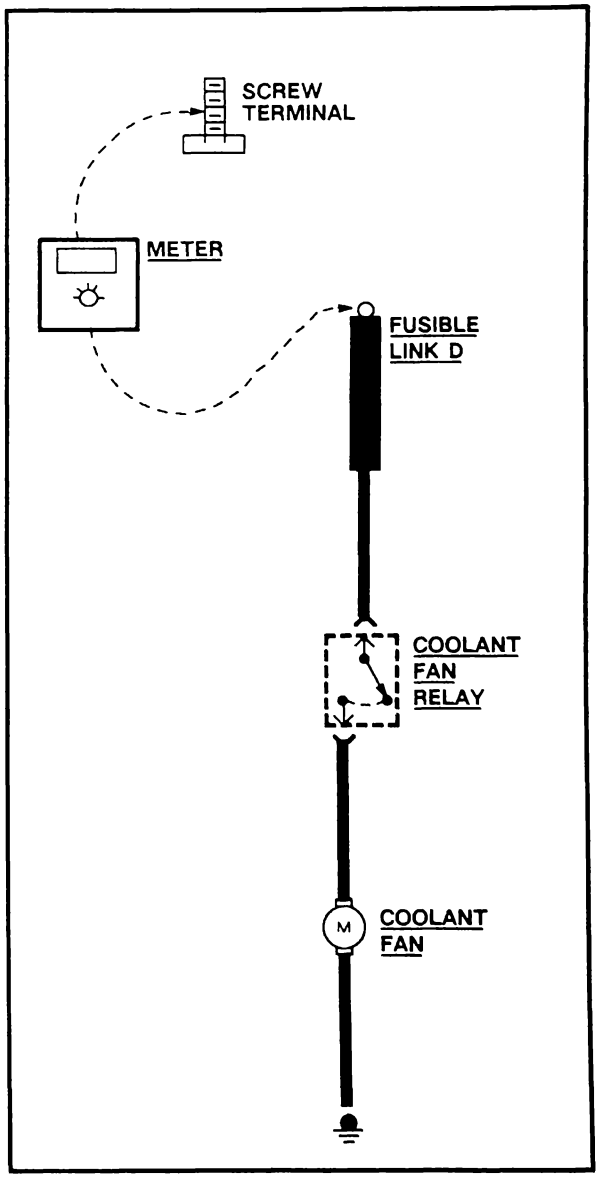

Figure 12

The meter should be connected between the screw terminal and the fusible link ring tongue terminal, after disconnecting the link.

A special use of current measurement is the case of a car whose battery goes dead with no explanation. Normally current flow from the battery with the key "off" should be less than 50 milliamps. By disconnecting the positive battery cable and connecting your current meter between the positive cable and positive battery terminal you can measure this current. If the current is greater than 50 milliamps it will be necessary to check every fuse and fusible link as described above. Any circuits that have high current flow should be investigated.

JUMP STARTING IN CASE OF EMERGENCY WITH AUXILIARY (BOOSTER) BATTERY

NOTICE: Do not push or tow the vehicle to start. Damage to the emission system or to other parts of the vehicle may result.

Both booster and discharged battery should be treated carefully when using jumper cables. Follow the procedure outlined below, being careful not to cause sparks:

CAUTION: Departure from these conditions or the procedure below could result in: (1) Serious personal injury (particularly to eyes) or property damage from such causes as battery explosion, battery acid, or electrical burns; and/or (2) damage to electronic components of either vehicle.

Never expose battery to open flame or electric spark-batteries generate a gas which is flammable and explosive.

Remove rings, watches, and other jewelry. Wear approved eye protection.

Do not allow battery fluid to contact eyes, skin, fabrics, or painted surfaces - fluid is a corrosive acid. Flush any contacted area with water immediately and thoroughly. Be careful that metal tools or jumper cables do not contact the positive battery terminal (or metal in contact with it) and any other metal on the car, because a short circuit could occur. Batteries should always be kept out of the reach of children.

- Set parking brake and place automatic transmission in "PARK" (NEUTRAL for manual transmission.) **Turn off the ignition, turn off lights, and all other electrical loads.**
- Check the built-in hydrometer. If it is clear or light yellow, replace the battery.
- Attach the end of one jumper cable to the positive terminal of the booster battery and the other end of the same cable to the positive terminal of the discharged battery. Do not permit vehicles to touch each other as this could cause a ground connection and counteract the benefits of this procedure. (Use 12-volt battery only to jump start the engine).
- Attach one end of the remaining negative cable to the negative terminal of the booster battery, and the other end to a solid engine ground (such as A/C compressor bracket or generator mounting bracket) at least 18 inches from the battery of the vehicle being started (DO NOT CONNECT DIRECTLY TO THE NEGATIVE TERMINAL OF THE DEAD BATTERY).
- Start the engine of the vehicle that is providing the jump start and turn off electrical accessories. Then start the engine in the car with the discharged battery.
- Reverse these directions exactly when removing the jumper cables. The negative cable must be disconnected from the engine that was jump started first.

ELECTRICAL REPAIRS

This section provides instruction in the following repairs:

- Circuit Protection
- Typical Electrical Repairs
- Splicing Copper Wire
- Splicing Aluminum Wire
- Splicing Twisted/Shielded Cable
- Repairing Connectors(Except Weather Pack®)
- Repairing Weather Pack® (Environmental) Connectors

Note: After any electrical repair is made, always test the circuit by operating the devices in the circuit. This confirms not only that the repair is correct, but also that the cause of the complaint was correctly identified.

CIRCUIT PROTECTION

All electrical circuits are protected against excessive loads which might occur because of shorts or overloads in the wiring system. Such protection is provided by a fuse, circuit breaker, or fusible link.

Fuses

The most common method of automotive wiring circuit protection is the fuse. Whenever there is an excessive amount of current flowing through a circuit the fusible element will melt and create an open or incomplete circuit (see Figure 1). Fuses are a "one time" protection device and must be replaced each time the circuit is overloaded.

Auto-fuses are color coded. The standardized color identification and ratings are shown in Figure 2.

For service replacement, non-color coded fuses of the same respective current rating can be used. The current rating of each fuse is molded into its head.

To determine whether or not an auto-fuse is blown, remove the suspect fuse and examine the element in the fuse for a break. (see Figure 1). If the element is broken, replace the fuse with one of equal current rating.

There are, however, additional specific circuits with in-line fuses. In-line fuses are located within the individual wiring harness. They are usually housed in spring-loaded, twist-type receptacles.

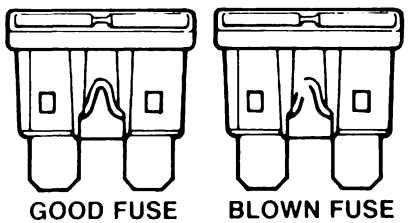

Figure 1 - Sample Fuses

CURRENT RATING (AMPERES)	COLOR
3	VIOLET
5	TAN
7.5	BROWN
10	RED
15	BLUE
20	YELLOW
25	WHITE
30	GREEN

Figure 2 - Fuse Rating and Color

Circuit Breakers

A circuit breaker is a protective device designed to open the circuit when a current load is in excess of rated breaker capacity. If there is a short or other type of overload condition in the circuit, the excessive current will open the circuit between the circuit breaker terminals. The circuit breaker will remain open until the trouble is found and corrected. The circuit breaker will close automatically when the excessive current is removed. The condition of a circuit breaker may be verified by removing it from the circuit and checking the resistance. A good circuit breaker will have less than 1 ohm resistance between the two terminals.

Fusible Links

In addition to circuit breakers and fuses, some circuits use fusible links to protect the wiring. Like fuses, fusible links are "one time" protection devices that will melt and create an open circuit (see Figure 3).

Not all fusible link open circuits can be detected by observation. Always inspect that there is battery voltage past the fusible link to verify continuity.

Fusible links are used instead of a fuse in wiring circuits that are not normally fused, such as the ignition circuit. Each fusible link is four wire-gage sizes smaller than the cable it is designed to protect. Links are marked on the insulation with wire-gage size because the heavy insulation makes the link appear to be a heavier gage than it actually is. The same wire size fusible link must be used when replacing a blown fusible link.

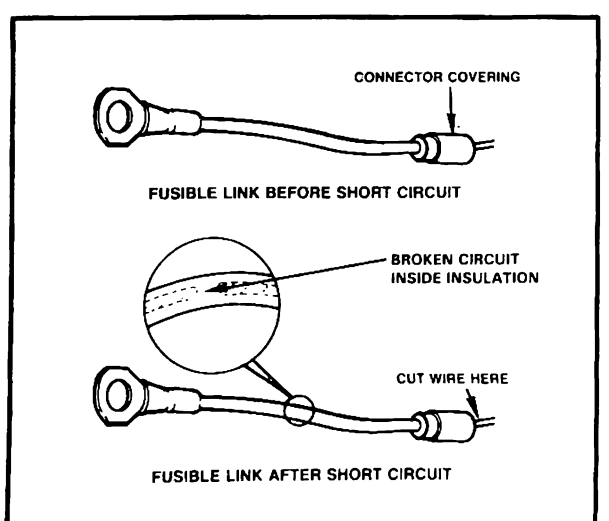

Figure 3 - Good and Damaged Fusible Links

Fusible links are available with two types of insulation: Hypalon® and Silicone/GXL (SIL/GXL). Service fusible links made with SIL/GXL may be used to replace either Hypalon® or SIL/GXL fusible links. Service fusible links made with Hypalon® may only be used to replace Hypalon® fusible links. To determine the fusible link type, nick the insulation of the blown fusible link with a knife. SIL/GXL will have a white inner core under the outer color. Hypalon® insulation is one color. Service fusible links are available in many lengths. Choose the shortest length that is suitable. If the fusible link is to be cut from a spool, NEVER make it longer than 228 mm (9 in).

CAUTION: Fusible links cut longer than 228 mm (9 in) will not provide sufficient overload protection.

To replace a damaged fusible link, cut it off beyond the splice. Replace with a repair link. When connecting the repair link, strip wire and use staking-type pliers to crimp the splice securely in two places (see Figure 4). For more details on splicing procedures see Splicing Copper Wire.

To replace a damaged fusible link which feeds two harness wires, cut them both off beyond the splice. Use two repair links, one spliced to each harness wire (see Figure 5).

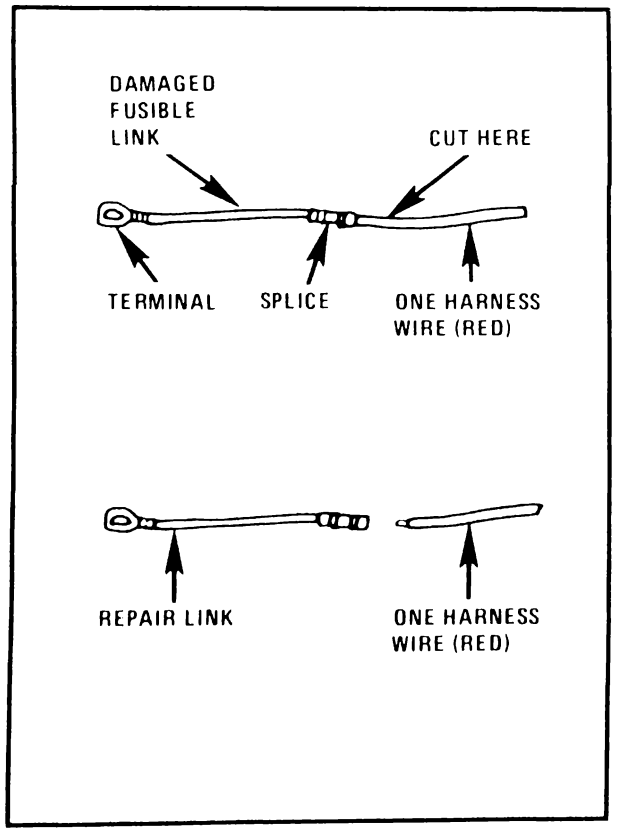

Figure 4 - Single Wire Feed Fusible Link

TYPICAL ELECTRICAL REPAIRS

An open circuit is an incomplete circuit. Power cannot reach the load or reach ground. If a circuit is open, active components do not energize. A short circuit is an unwanted connection between one part of the circuit and either ground or another part of the circuit. A short circuit causes a fuse to blow or a circuit breaker to open.

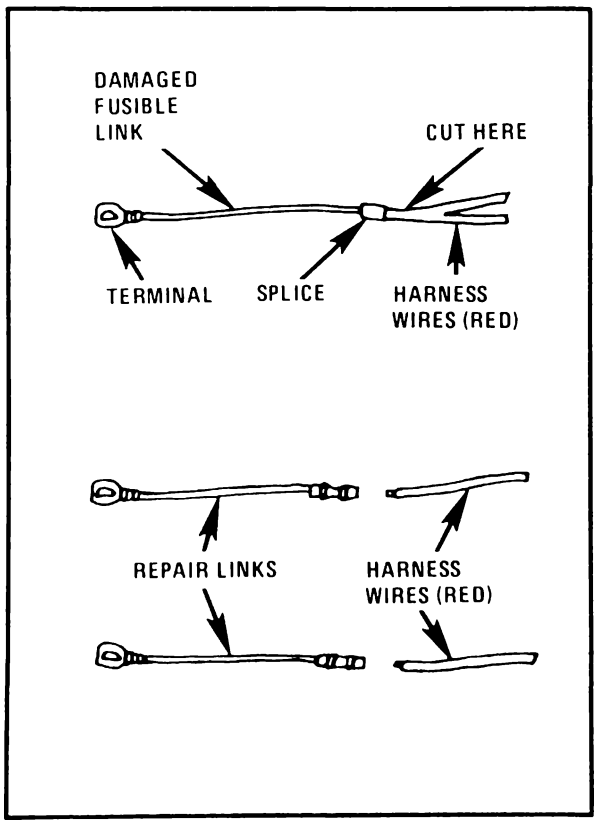

Figure 5 - Double Wire Feed Fusible Link

Short Circuits Caused by Damaged Wire Instalation

- Locate the damaged wire.
- Find and correct the cause of the wire insulation damage.
- For minor damage, tape over the wire. If damage is more extensive, replace the faulty segment of the wire. (Refer to the splicing instructions for copper, aluminum, or shielded cable for the correct procedure.)

SPLICING COPPER WIRE

Step One: Open the Harness

If the harness is taped, remove the tape. To avoid wire insulation damage, use a sewing "seam ripper" to cut open the harness (available from sewing supply stores).

If the harness has a black plastic conduit, simply pull out the desired wire. Note that aluminum wire is enclosed in brown conduit. Refer to Splicing Aluminum Wire if necessary.

Step Two: Cut the Wire

Begin by cutting as little wire off the harness as possible. You may need the extra length of wire later if you decide to cut more wire off to change the location of a splice. You may have to adjust splice locations to make certain that each splice is at least 40mm (1½ in) away from other splices, harness branches, or connectors.

Step Three: Strip the Insulation

When replacing a wire, use a wire of the same size as the original wire or larger. The schematics list wire size in metric units. The following table (see Figure 6) shows the commercial (AWG) wire sizes that can be used to replace each metric wire size. Each AWG size is either equal to or larger than the equivalent metric size.

METRIC WIRE SIZES	AWG SIZES
.22	24
.35	22
.5	20
.8	18
1.0	16
2.0	14
3.0	12
5.0	10
8.0	8
13.0	6
19.0	4
32.0	2

Figure 6 - Wire Size Conversion Table

To find the correct wire size either find the wire on the schematic page and convert the metric size to the AWG size, or use an AWG wire gage.

If you aren't sure of the wire size, start with the largest opening in your wire stripper and work down until you get a clean strip of the insulation. Be careful to avoid nicking or cutting any of the wires.

Check the stripped wire for nicks or cut strands. If the wire is damaged, repeat the procedure on a new section of wire. The two stripped wire ends should be equal in length.

Step Four: Crimp the Wires

Select the proper clip to secure the slice. To determine the proper clip size for the wire being spliced, follow the directions included with your clips. Select the correct anvil on the crimper. (On most crimpers your choice is limited to either a small or large anvil.) Overlap the two stripped wire ends and hold them between your thumb and forefinger as shown in Figure 7. Then, center the splice clip under the stripped wires and hold it in place.

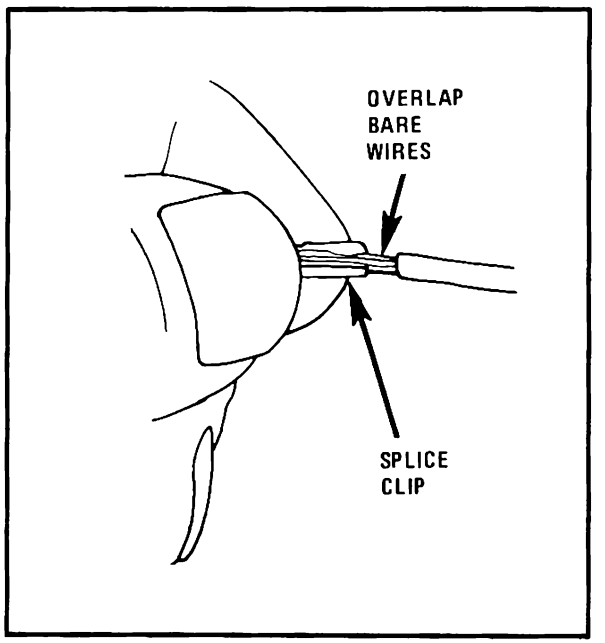

Figure 7 - Centering the Splice Clip

- Open the crimping tool to its full width and rest one handle on a firm flat surface.
- Center the back of the splice clip on the proper anvil and close the crimping tool to the point where the former touches the wings of the clip.
- Make sure that the clip and wires are still in the correct position. Then, apply steady pressure until the crimping tool closes (see Figure 8).

Before crimping the ends of the clip, be sure that:

- The wires extend beyond the clip in each direction.
- No strands of wire are cut loose.
- No insulation is caught under the clip.

Crimp the splice again, once on each end. Do not let the crimping tool extend beyond the edge of the clip or you may damage or nick the wires (see Figure 9).

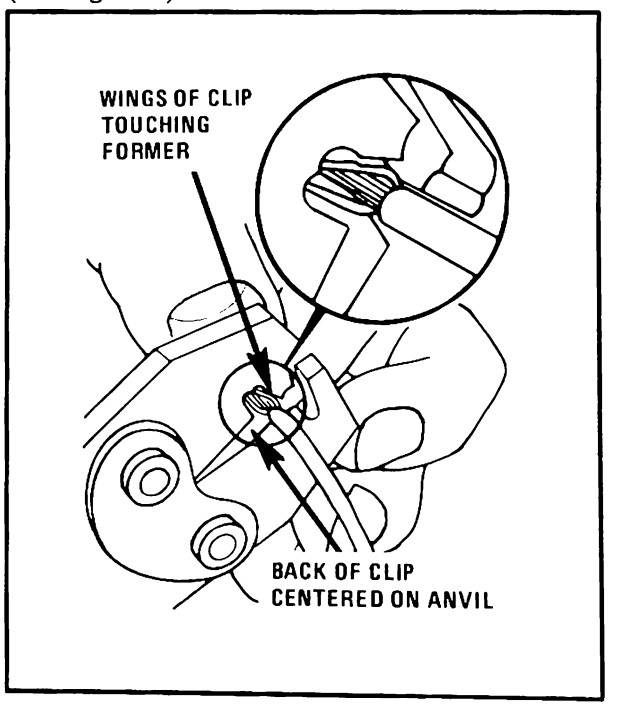

Figure 8 - Crimping the Splice Clip

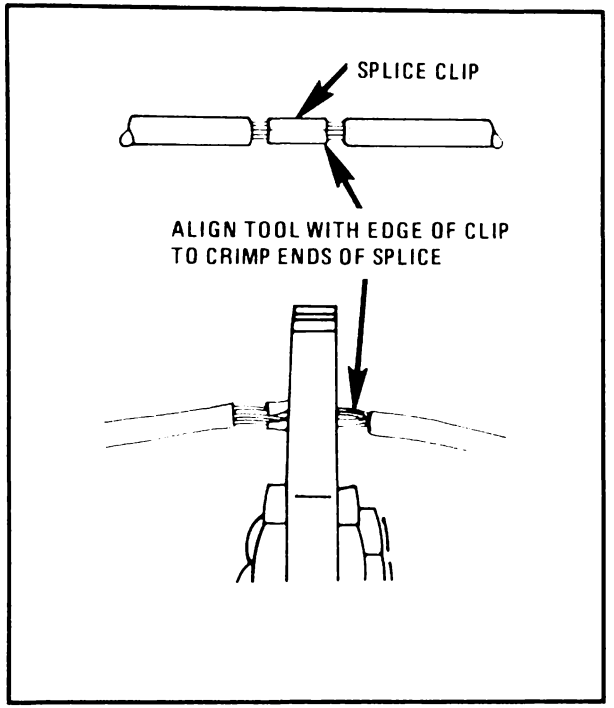

Figure 9 - Completing the Crimp

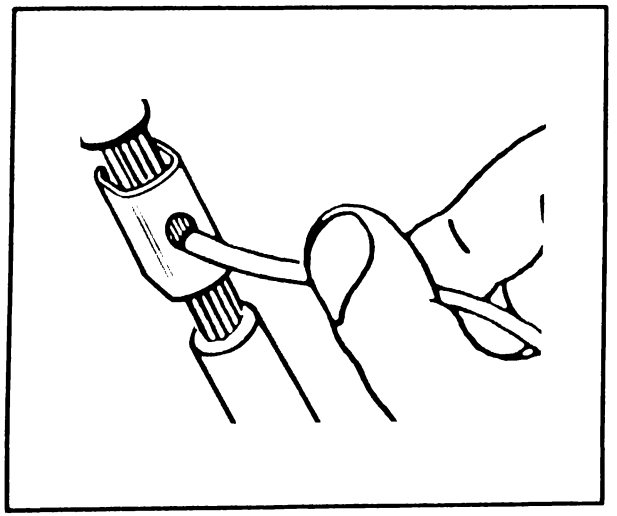

Figure 10 - Applying the Solder

Step Five: Solder

Apply 60/40 rosin core solder to the opening in the back of the clip (see Figure 10). Follow the manufacturer's instructions for the solder equipment you are using.

Step Six: Tape the Splice

Center and roll the splicing tape. The tape should cover the entire splice. Roll on enough tape to duplicate the thickness of the insulation on the existing wires. Do not flag the tape. Flagged tape may not provide enough insulation, and the flagged ends will tangle with the other wires in the harness (see Figure 11).

If the wire does not belong in a conduit or other harness covering, tape the wire again. Use a winding motion to cover the first piece of tape (see Figure 12).

SPLICING ALUMINUM WIRE

General Motors cars have a front body wiring harness made of 2.0 metric and 1.0 metric (14 and 16 gage) insulated solid cable aluminum wires. These wires are enclosed in a brown solid plastic conduit from behind the instrument panel to the rear of the car.

A special repair kit (1684873-GR.2.530-KIT-ALUM-WIRE TERMINAL REPAIR) is available to help make repairs on aluminum wires. This kit contains materials and instructions that can be used either to splice wire or crimp on new terminals. The kit includes the following parts:

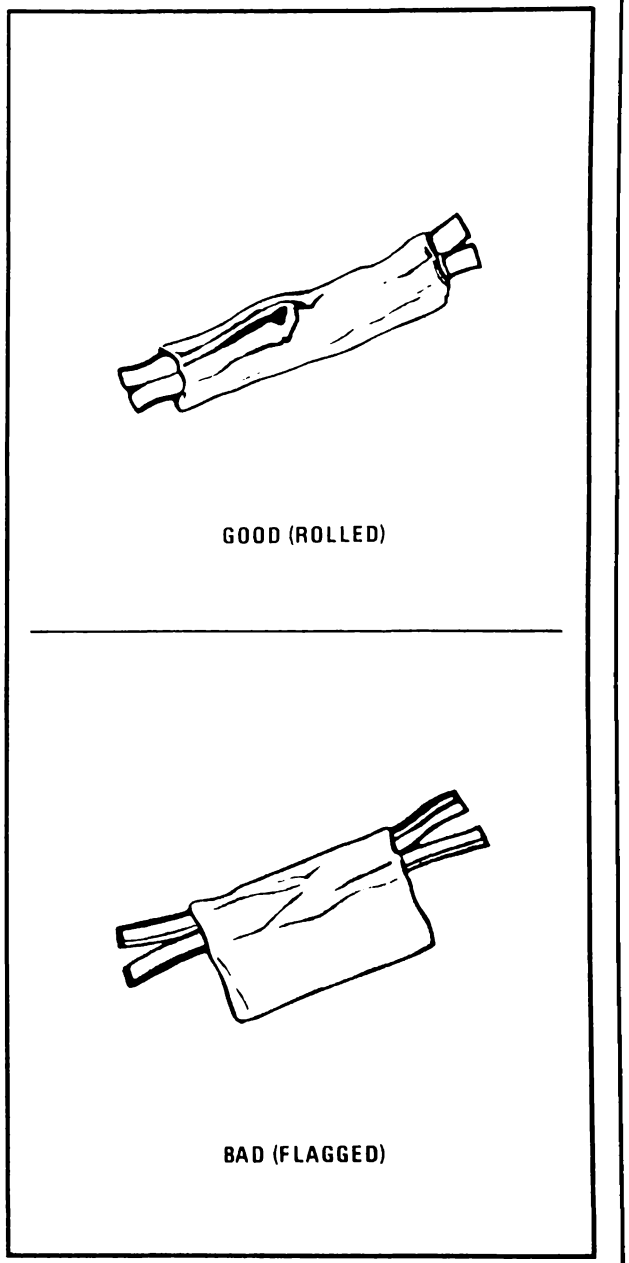

Figure 11 - Proper First Taping

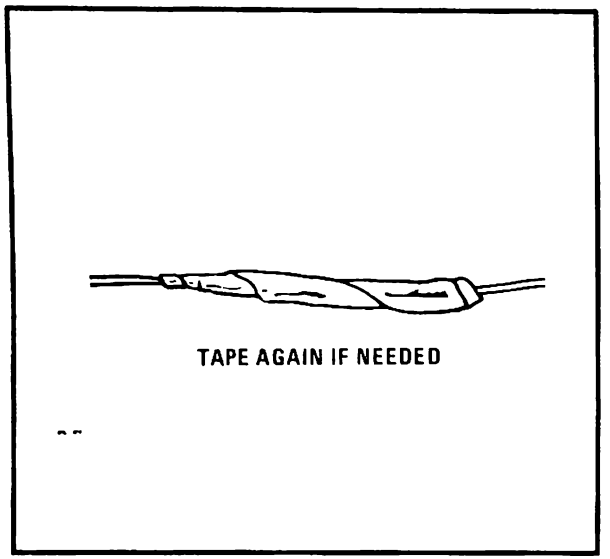

Figure 12 - Proper Second Taping

— Small cylindrical metal splice clips.

— A plastic tube of petroleum jelly.

— Ten 2.0 metric (14 gage) DK GRN leads: 150 mm (6") long with terminals

— Ten 1.0 metric (16 gage) BRN leads: 150 mm (6") long with terminals.

Use of the special materials in this kit will help prevent galvanic corrosion. Galvanic corrosion causes increased resistance between the terminal and wire, or the splice clip and wire, or both. Increased resistance would affect the operation of the electrical components in the repaired circuit.

Step One: Open the Harness

Because the harness has a solid plastic conduit, simply cut the conduit open with diagonal cutters and pull out the desired wire. Be careful not to damage any of the wires when cutting open the conduit.

Step Two: Cut the Wire

Begin by cutting as little wire off the harness as possible. You may need the extra length of wire later if you decide to cut more wire off to change the location of a splice. You may have to adjust splice locations to make certain that each splice is at least 40mm (1½") away from the other splices, harness branches, or connectors.

Step Three: Strip the Insulation

When replacing a wire or lead, use a wire of the same size as the original wire, or larger. Look up the metric size on the schematic and select the proper-sized leads from the special repair kit. Remember that the wires in this harness can only be one of two sizes-2.0 metric or 1.0 metric (14 or 16 gage).

Use wire strippers of the proper gage to strip approximately 6mm (¼") of insulation from each wire end.

When stripping the outer jacket from the aluminum wire core, be careful not to nick or dammage the core. A damaged core will weaken the assembly at this point.

Step Four: Coating the Splice/Terminal

To prevent corrosion, apply a generous coating of petroleum jelly to the splice area. If you are replacing a lead, also thoroughly coat the terminal crimp area and aluminum core with petroleum jelly. Both areas are shown in Figure 13 and identified with the letter "A".

Step Five: Crimp the Wires

— Select the proper-sized splice clip (follow the instructions included in the special repair kit).

— Place one wire end in each end of the splice clip.

— Crimp the clip firmly to the wire using 10" slip joint pliers. DO NOT solder the splice (see Figure 14).

— Repeat this procedure for the second wire or lead in the splice clip.

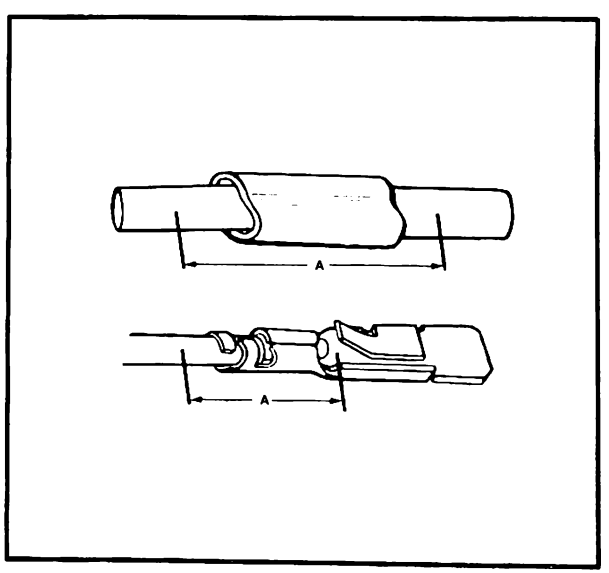

Figure 13 - Where to Apply Petroleum Jelly

Step Six: Tape Splice/Insert Terminal

Tape over both the splice clip and the petroleum jelly to seal out moisture and insulate the splice (see Figure 15). If you have replaced a lead, do not tape over the terminal crimp area but insert the lead into the connector body.

SPLICING TWISTED/SHIELDED CABLE

Twisted/shielded cable is sometimes used to protect wiring from electrical noise (stray signals). For example, two-conductor cable of this construction is used between the ECM and the distributor. See Figure 16 for a breakdown of twisted/shielded cable construction.

Step One: Remove Outer Jacket

Remove the outer jacket and discard it. Be careful to avoid cutting into the drain wire or the mylar tape.

Step Two: Unwrap the Tape

Unwrap the aluminum/mylar tape, but do not remove it. The tape will be used to rewrap the twisted conductors after the splices have been made.

Step Three: Prepare the Splice

Untwist the conductors. Then, prepare the splice by following the splicing instructions for copper wire presented earlier. Remember to stagger splices to avoid shorts (see Figure 17).

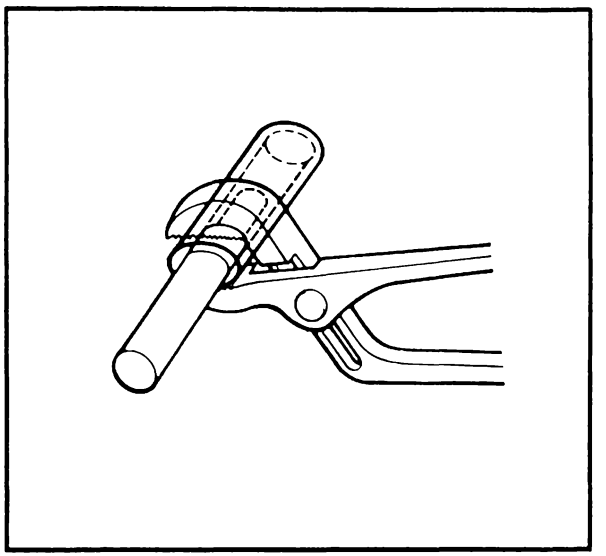

Figure 14 - Crimping the First Half of the Splice Clip (Aluminum Wire)

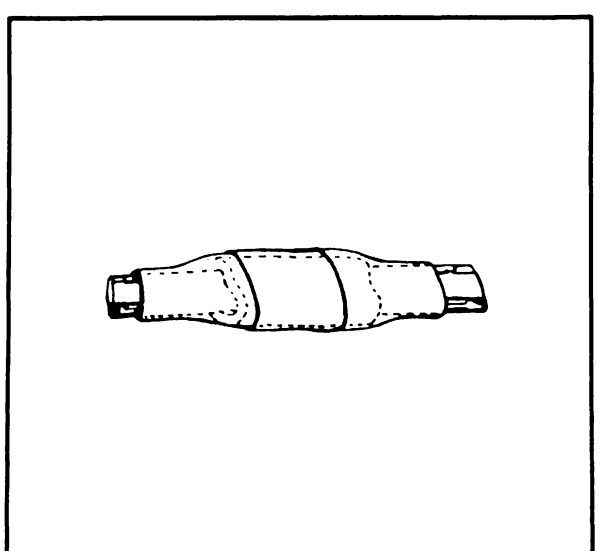

Figure 15 - The Tape Covers the Splice Clip and the Petroleum Jelly to Seal and Insulate

Step Four: Re-Assemble the Cable

After you have spliced and taped each wire, rewrap the conductors with the mylar tape. Be careful to avoid wrapping the drain wire in the tape.

Next, splice the drain wire following the splicing instructions for copper wire. Then, wrap the drain wire around the conductors and mylar tape (see Figure 18).

Step Five: Tape the Cable

Tape over the entire cable using a winding motion (see Figure 19). This tape will replace the section of the jacket you removed to make the repair.

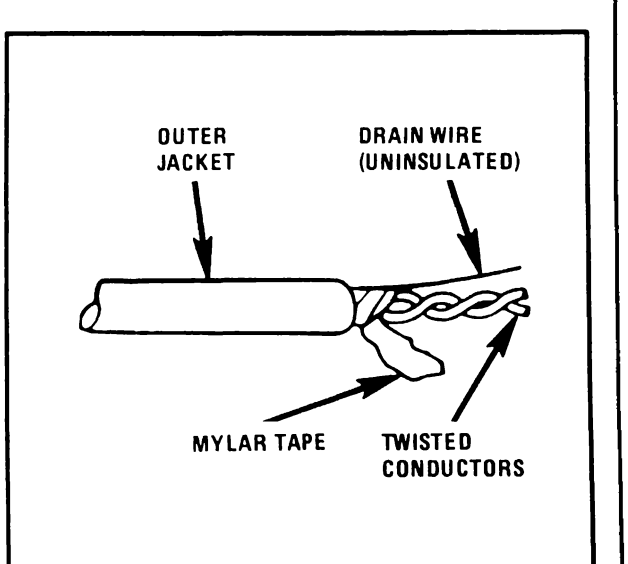

Figure 16 - Twisted/Shielded Cable

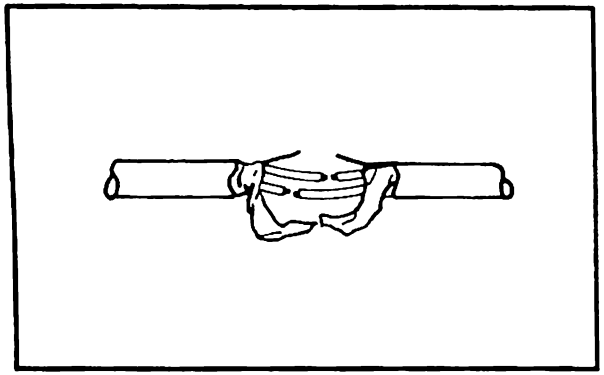

Figure 17 - The Untwisted Conductors

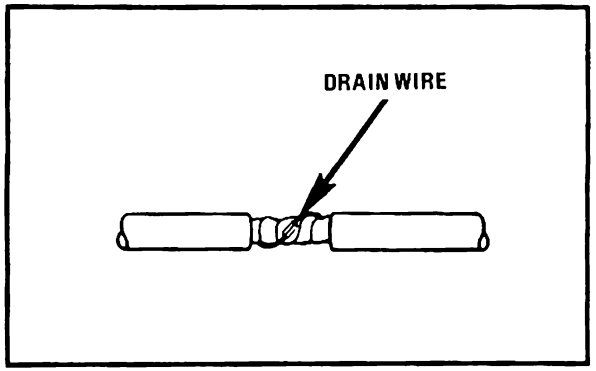

Figure 18 - The Reassembled Cable

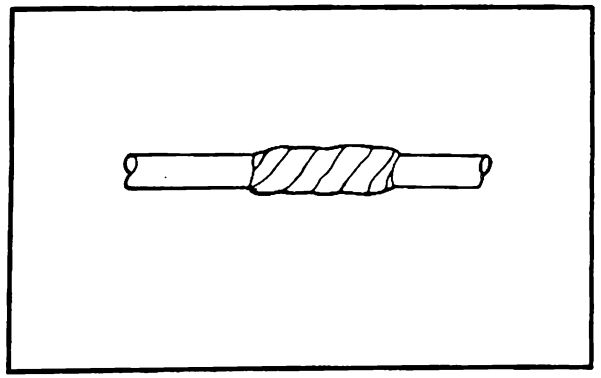

Figure 19 - Proper Taping

REPAIRING CONNECTORS

High Density, Bulkhead and Printed Circuit Connectors

The following general repair procedures can be used for High Density, Bulkhead, and Printed Circuit connectors. Prior to starting any repairs, separate connector halves and remove any terminal covers or retainers.

Instruction in the disassembly, repair, and assembly of connectors follows. Consult figures 20 to 22 for details on each specific type of connector. The instruction is divided into steps. Only perform those steps necessary to make the repair.

Step One: Remove the Lead

Depress the terminal locking tang using the proper size pick.

CAUTION: Do not place fingers or other parts of the body next to or around the back of the connector. If too much force is used, the pick and terminal could be pushed out the back of the connector and cause injury.

— Place the pick between the locking tang of the terminal and the plastic of the connector body.

— Ease the lead back enough to release the locking tang.

— Pull the pick out.

— Gently pull the lead out of the back of the connector body.

Step Two: Re-Form the Locking Tang

If the lead and terminal are in good condition, re-form the locking tang:

— Hold the lead firmly to prevent the splice between the terminal and the wire from flexing.

— Use the pick to bend the locking tang back into its original shape. Also check to see that the remainder of the terminal is still in its original shape

Step Three: Make the Repair

When you make a repair, use the correct types of terminals and wires.

— Attach a new wire or a new terminal using the procedures in Splicing Copper Wire or Splicing Aluminum Wire.

Step Four: Insert the Lead

Before inserting the lead, make certain that the terminal is correctly shaped. Be careful to insert terminals in their proper locations.

— Gently insert the lead from the back.

The terminal should stop or "catch" about halfway through the connector body.

Note: With bulkhead connectors, in many cavities it is possible for the terminal to be inserted in two ways. Be sure it is inserted in the same direction as it was removed, or to mate correctly with the facing terminal.

— Push back and forth gently on the lead to be sure the terminal is held in place in both directions. If the terminal easily pushes or pulls out, review Step Two: "Re-Form the Locking Tang."

Before mating the connector halves replace any terminal covers or retainers that were removed, and apply grease to prevent corrosion.

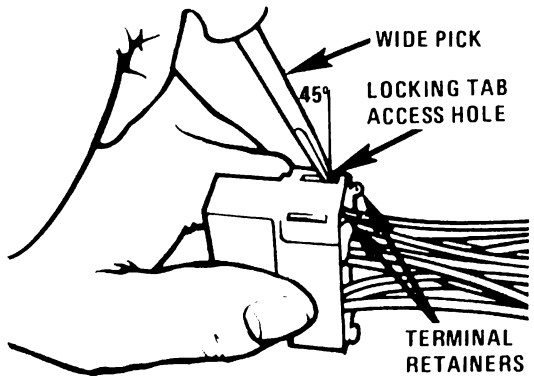

REMOVING TERMINAL RETAINERS

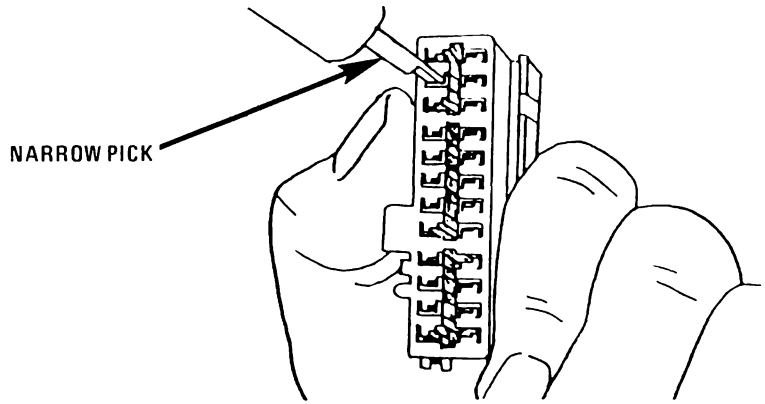

DEPRESSING THE LOCKING TANG

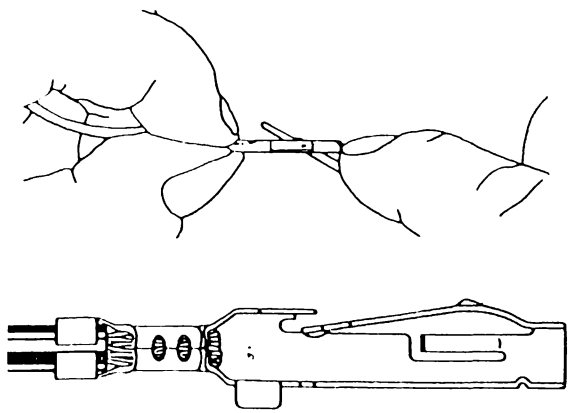

RE-FORMING THE LOCKING TANG

Figure 20 - High Density Connectors

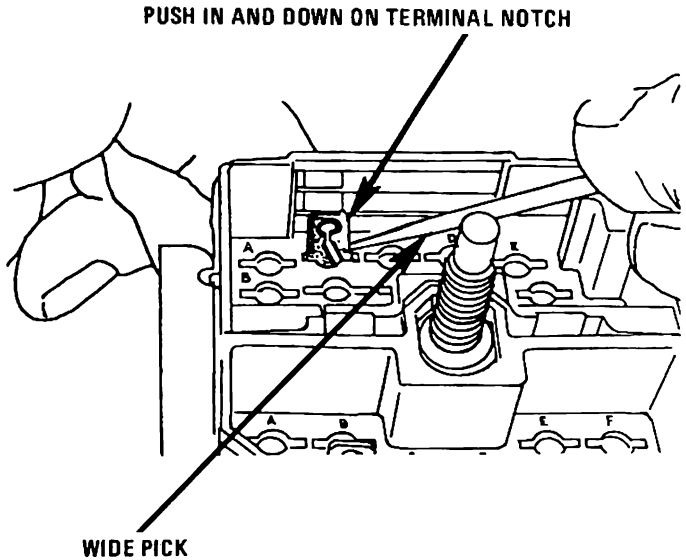

DEPRESSING THE LOCKING TANG (MALE TERMINAL)

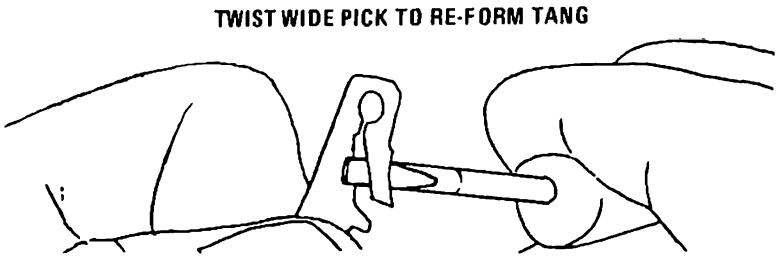

RE-FORMING THE LOCKING TANG (MALE TERMINAL)

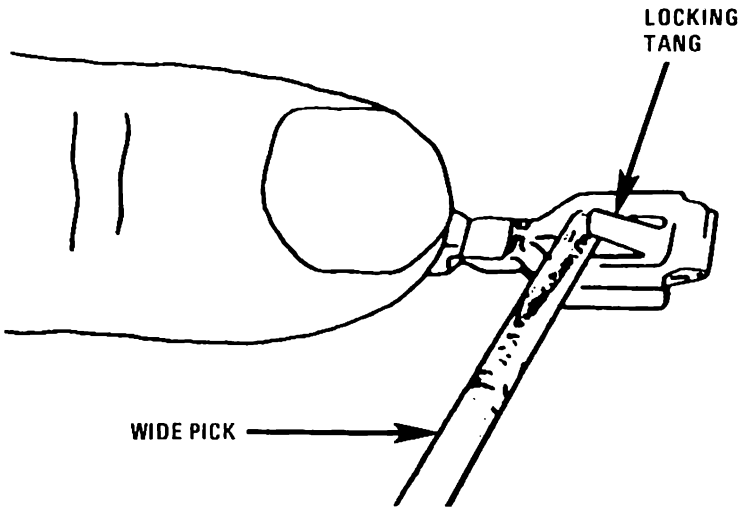

RE-FORMING THE LOCKING TANG (FEMALE TERMINAL)

Figure 21 - Bulkhead Type Connectors

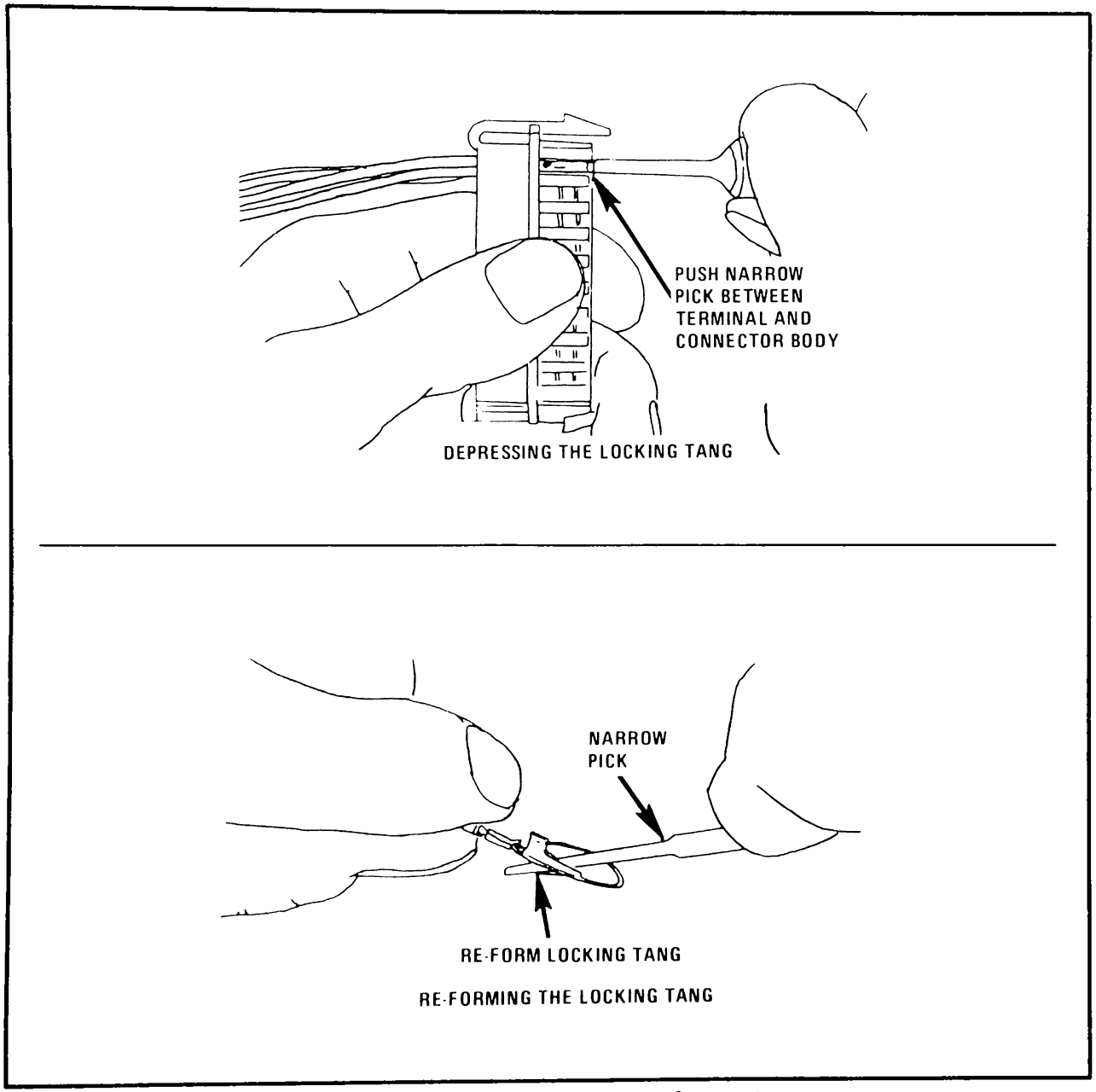

Figure 22 - Printed Circuit Type Connectors

Repairing Weather Pack® (Environmental) Connectors

Weather Pack® or weatherproof connectors provide environmental protection on certain electrical circuits. This protection consists of a moisture-proof rubber flexible seal between the two connector halves and rubber cable seals attached to each terminal. The terminals and the cable seals are secured by a hinged secondary lock on small Weather Pack® connectors and by plastic terminal retainers on large Weather Pack® connectors.

If a Weather Pack® connector requires repair, do not replace the Weather Pack® parts with other types of connectors and terminals. Also, do not omit either the large seal or the cable seals when making a repair.

Instruction in the disassembly, repair, and assembly of both small and large Weather Pack® connectors follows. The instruction is divided into steps. Only perform those steps necessary to make the repair.

Step One: Separate the Connector Halves

To separate a large connector, unscrew the bolt in the center of the connector body. Then pull the two halves apart. To separate a small connector, simply pull up on the primary lock and simultaneously pull the two halves apart.

Step Two: Remove the Terminal Retainer(s) (Large Connectors)/Open the Secondary Locks (Small Connectors)

To remove a terminal retainer, press a wide pick at a 45° angle against the locking nib (see Figure 23). Push the nib up as far as possible. Then, pull the retainer out.

To open the secondary locks on small connectors, flip down the lock hinges as shown in Figure 24.

Step Three: Remove the Lead

Depress the terminal locking tangs using a Weather Pack® pick (J28742-A or the equivalent):

— Push the hollow cylinder of the pick into the terminal cavity from the front until it stops (see Figures 25 and 26). The pick should surround the terminal (see Figure 27 for drawings of locking tangs).

— Pull the pick out.

— Gently pull the lead out of the back of the connector body.

Note that the male connector body half contains female terminals and the female half houses male terminals.

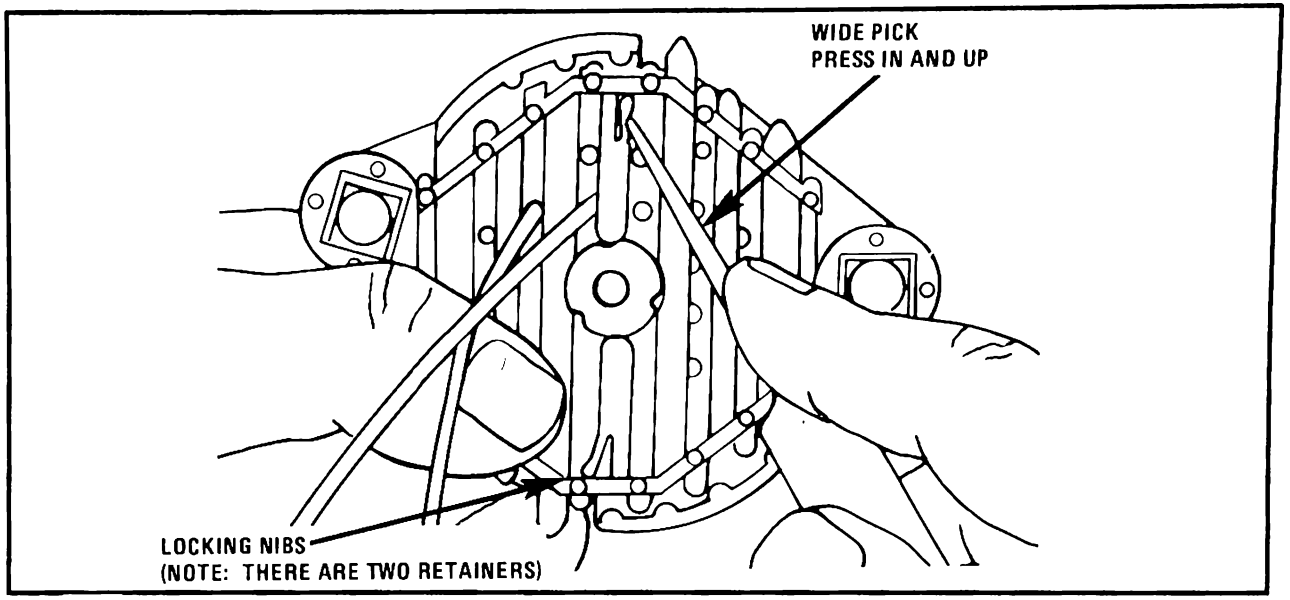

Figure 23 - Releasing the Terminal Retainers (Large Connectors)

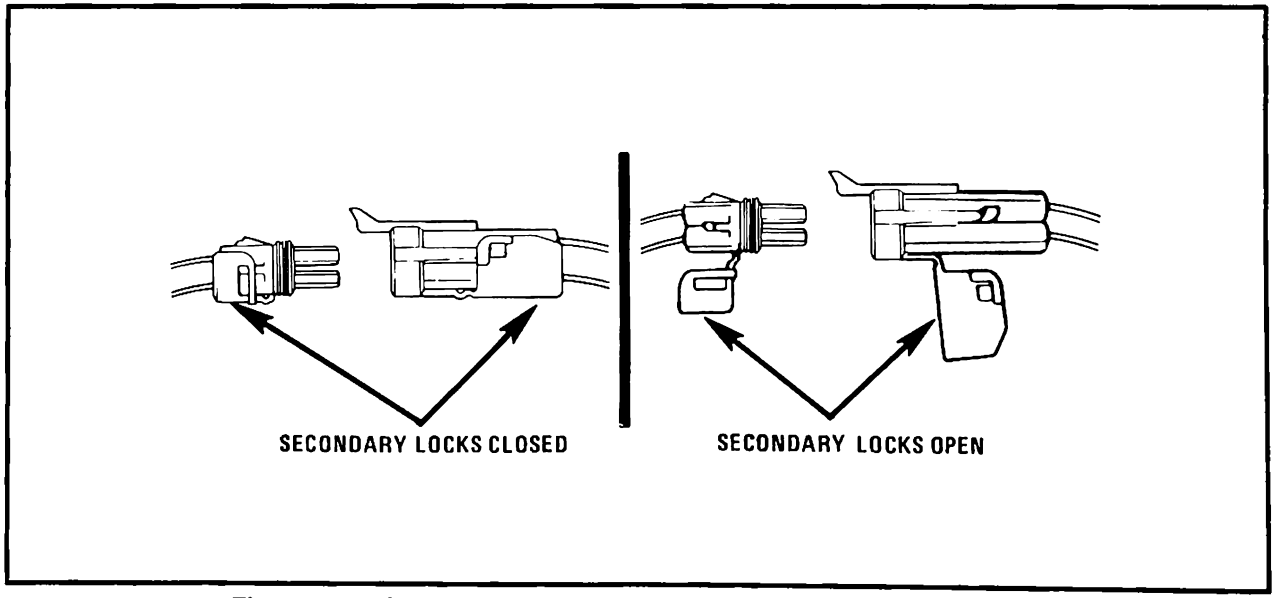

Figure 24 - Opening the Secondary Locks (Small Connectors)

Step Four: Re-Form the Locking Tang

If the lead and terminal are in good condition, re-form the locking tang.

- Hold the lead firmly to prevent the splice between the terminal and the wire from flexing.
- Use the pick (J28742-A or the equivalent) to bend the locking tang back into its original shape (see Figure 27). Also, check to see that the remainder of the terminal is still in its original shape. (See Step Six for instruction in inserting the lead).

Step Five: Make the Repair

When you make a repair, use the correct types of terminals, wires, and seals.

To add a new lead, cut the wire and crimp and solder on the Weather-Pack® lead assembly (see Figure 28) using rosin core solder. (Follow the instructions for splicing wire outlined earlier in this section.)

If Weather-Pack® lead assemblies are not available, splice a new terminal and cable seal onto the existing wire.

- Cut the wire immediately behind the cable seal.
- Slip the new cable seal onto the wire and push it back out of the way.
- Strip 5.0mm (3/16") of insulation from the wire.

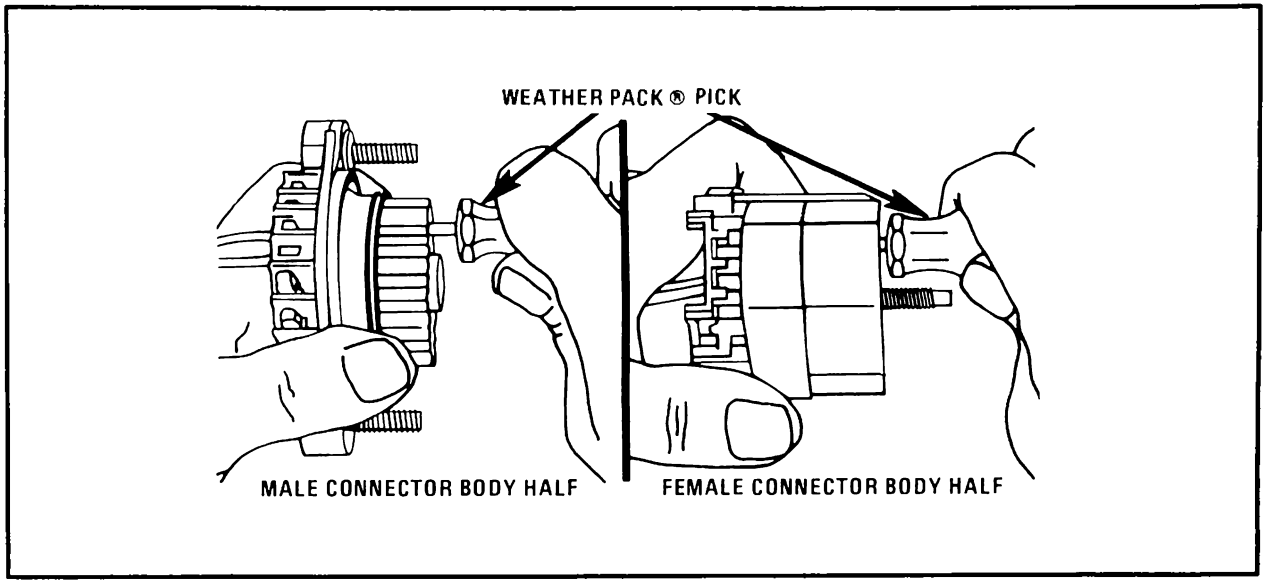

Figure 25 - Releasing the Terminal Locking Tangs (Large Connector)

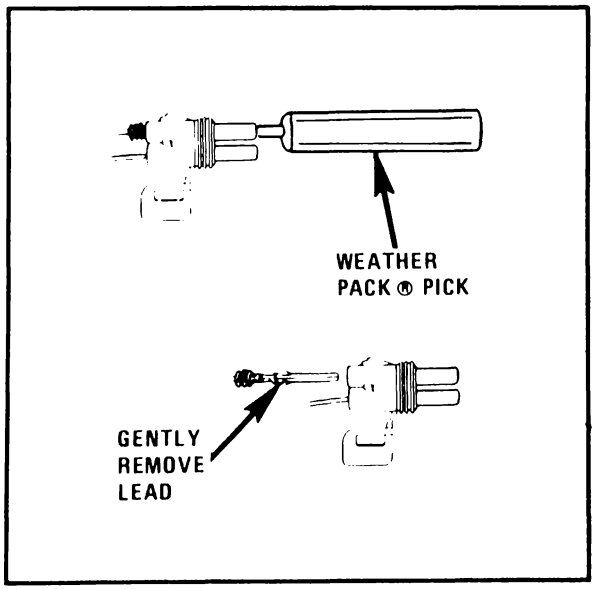

Figure 26 - Releasing the Terminal Locking Tangs (Small Connectors)

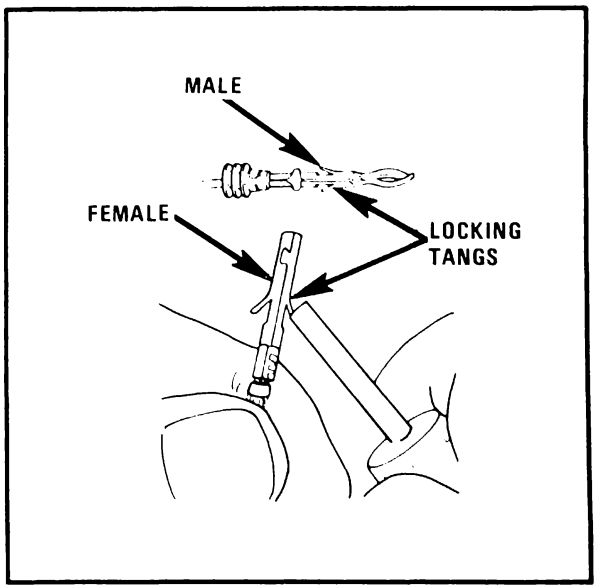

Figure 27 - Re-Forming the Locking Tang

— Crimp the new terminal over the copper strands (core crimp) as shown in Figure 29. (Use a standard crimping tool number J25563 in the Kent-Moore catalog).

— Solder with rosin core solder.

— Move the cable seal to the edge of the insulation.

— Crimp the grips at the end of the terminal around the cable seal and insulated wire as shown in Figure 29 (insulation crimp). Apply light pressure for this crimp.

Remember to use the proper types of terminals and seals for this repair.

Step Six: Insert the Lead

Before inserting the lead, make certain that the terminal is correctly shaped (see Figure 27). Then, gently insert the lead from the back. The terminal should stop or "catch" about halfway through the connector body. Gently push back and forth on the lead to be sure the terminal is held in place in both directions. If the terminal easily pushes or pulls out, review Step Four: "Re-Form the Locking Tang."

Be careful to insert leads in their proper locations.

Step Seven: Replace the Terminal Retainer(s) (Large Connectors)/Secondary Locks (Small Connectors)

Replace the terminal retainers by slipping the retainer halves into the connector body (as shown in Figure 30).

To close the secondary locks on small connectors, flip the hinges back to their original positions (see Figure 31).

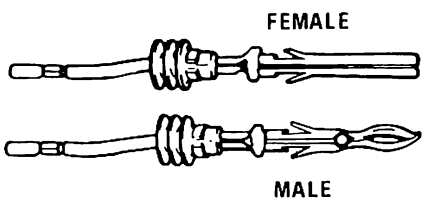

Figure 28 - Lead Assemblies

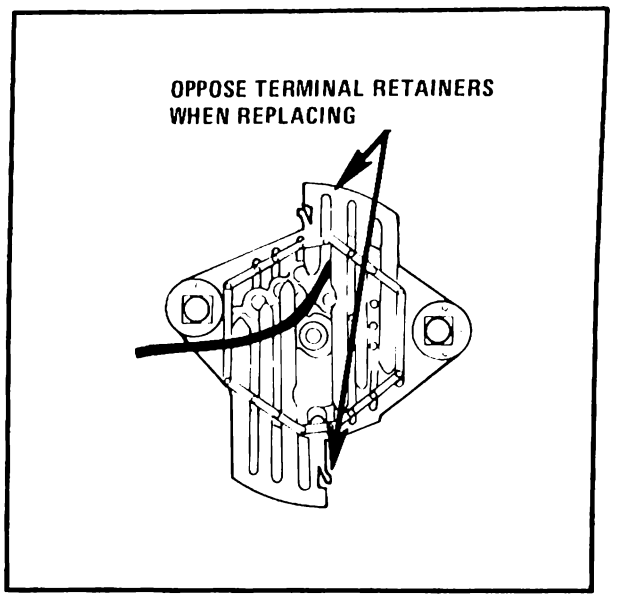

Figure 30 - Replacing the Terminal Retainers (Large Connectors)

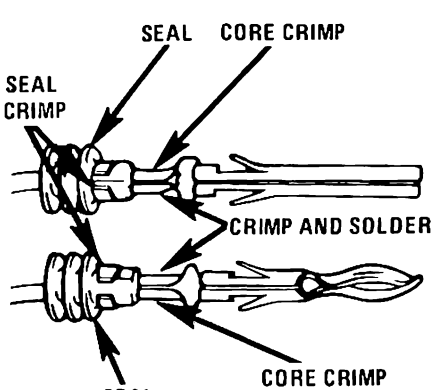

Figure 29 - Replacing the Terminal

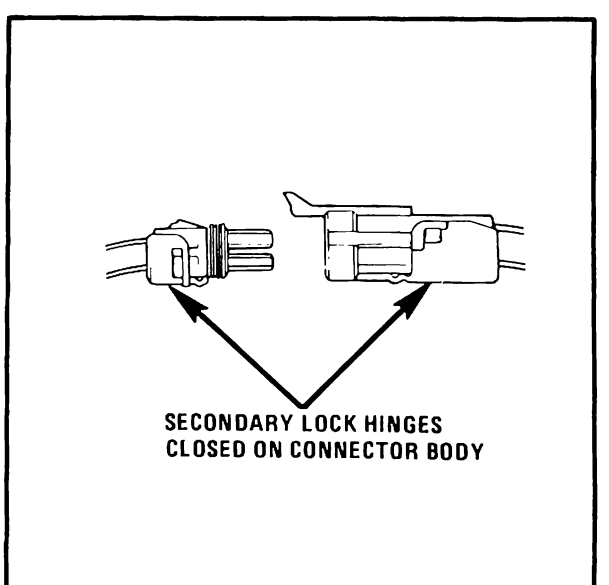

Figure 31 - Closing the Secondary Locks

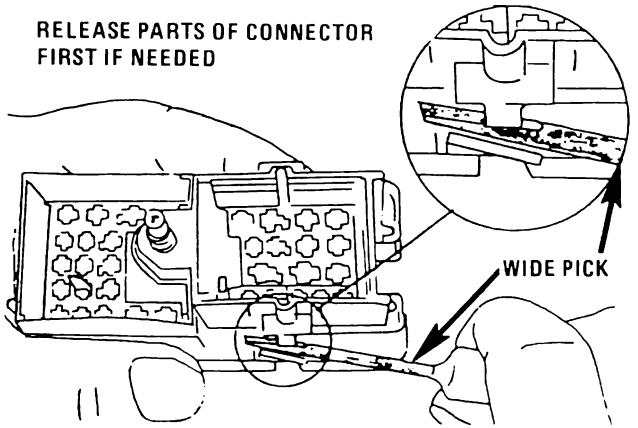

REMOVING TERMINAL RETAINERS (MALE TERMINALS)

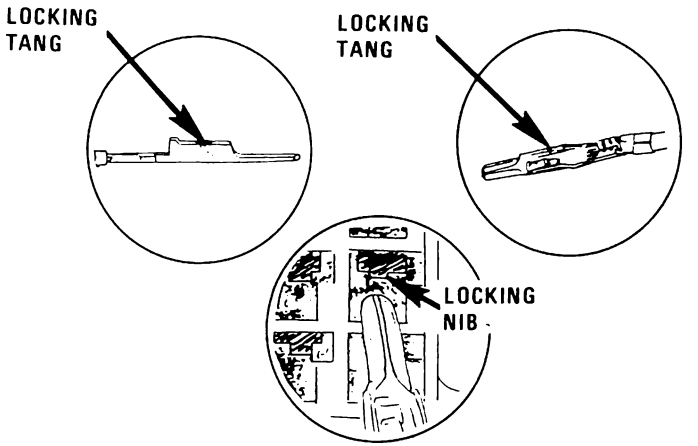

RE-FORMING THE LOCKING TANG (MALE TERMINAL)

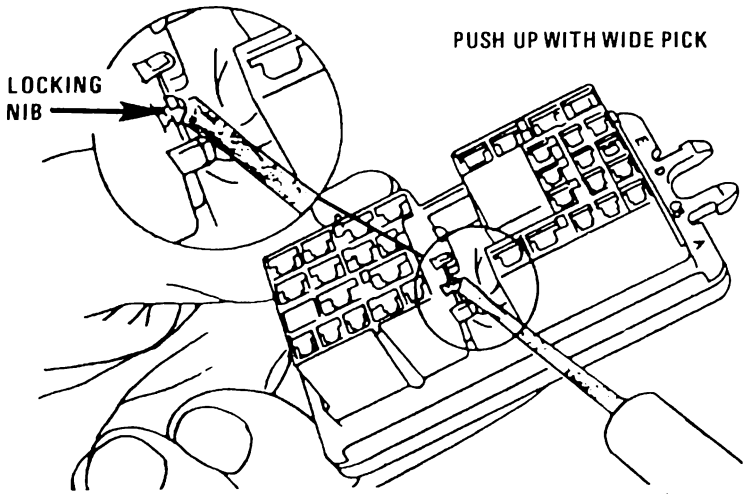

REMOVING TERMINAL RETAINERS (FEMALE TERMINALS)

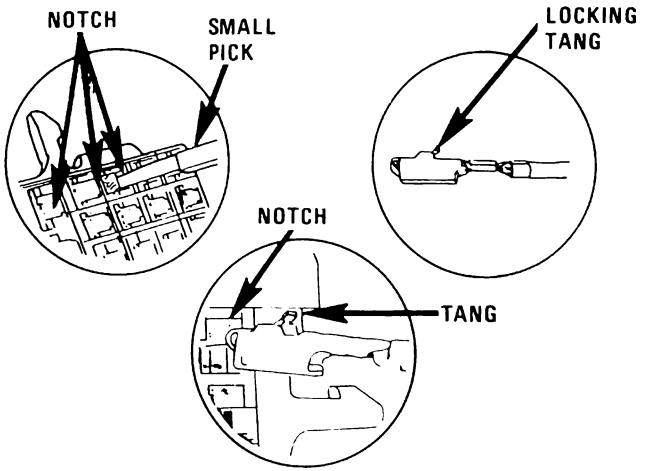

RE-FORMING THE LOCKING TANG (FEMALE TERMINAL)

Figure 32 - Metri-pack Type Connectors — Push-to-Seat Type

Repairing Metri-Pack Series 150 Connectors (Pull-to-Seat Type)

Metri-Pack connectors are used to connect various sensors such as the cam, crankshaft and coolant sensors to primary harnesses in the engine compartment. The Metri-Pack connector consists of three parts (see Figure 35): a Pull-to-Seat type terminal, a connector body, and a rubber seal which is inserted in the back of the connector body to provide environmental protection.

Do not replace the Metri-Pack parts with parts of other types of connectors and terminals or omit the environmental seals when repairing Metri-Pack connectors.

Repair instructions are divided into two steps, connector disassembly and terminal removal and connector assembly and terminal insertion. (Refer to figures 33 to 36).

Step One: Connector Disassembly and Terminal Removal

Insert tool BT8446 or J35689 into the connector (Figure 33). Pull back on the wire slightly, pry up the locking tang and then push the wire through the front of the connector. If the terminal will be reused, reshape the locking tang.

Step 2: Connector Assembly and Terminal Insertion

Insert the wire through the seal and the connector body (Figure 35). Crimp the terminal to the stripped wire. Pull the wire and the terminal back through the connector body until it locks in place (Figure 36).

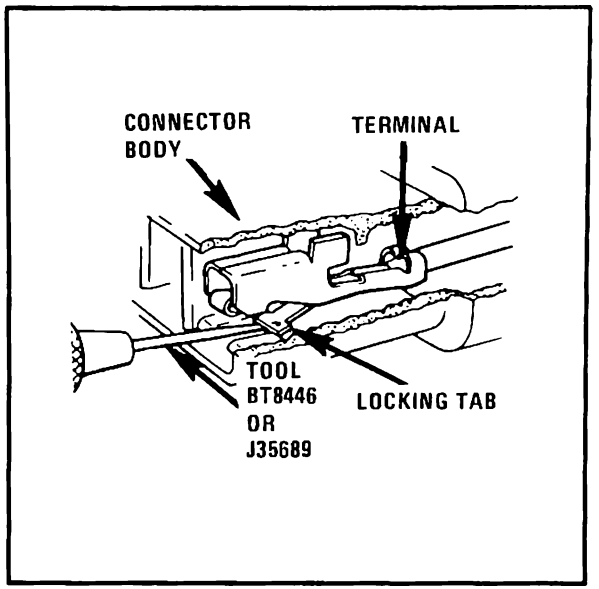

Figure 33 - Terminal Removal from Connector Body

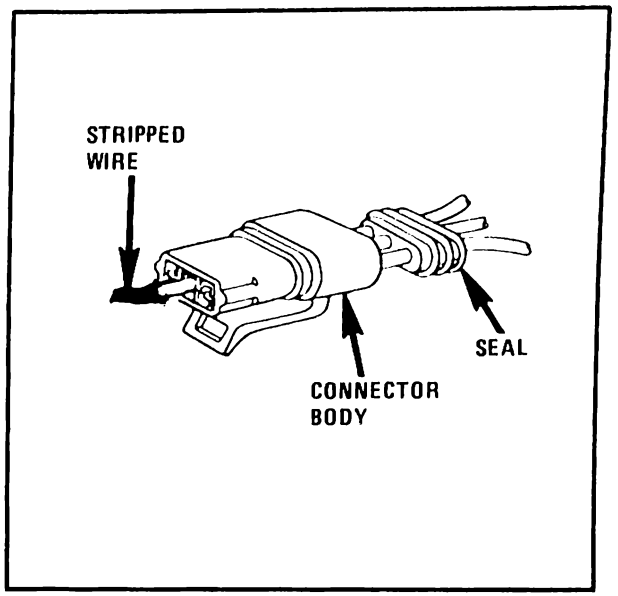

Figure 35 - Connector Reassembly

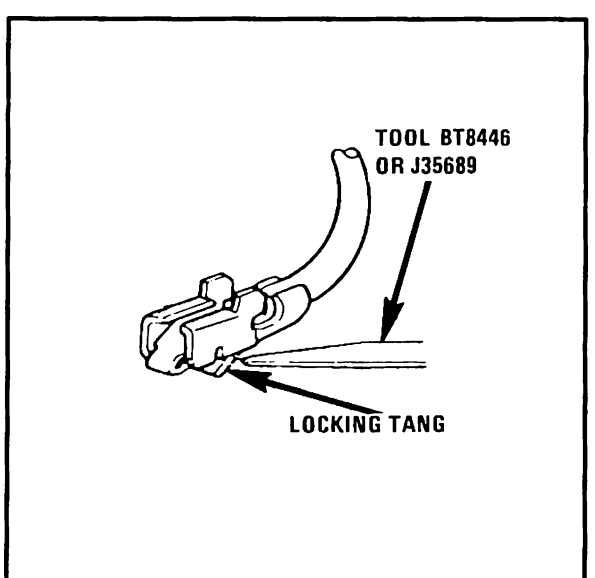

Figure 34 - Re-Forming the Locking Tang

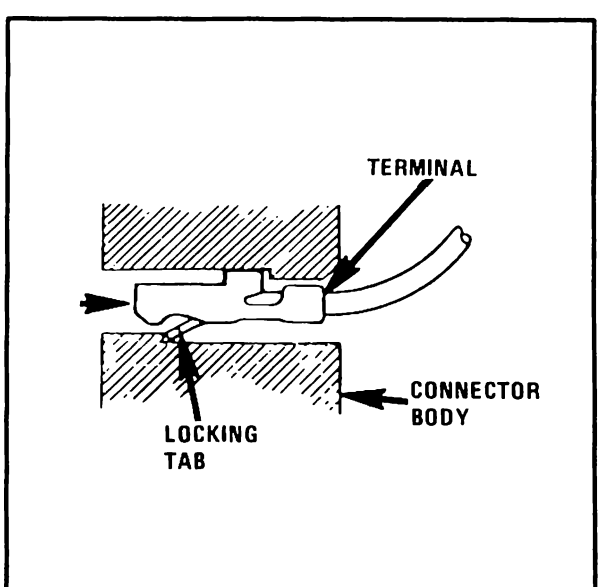

Figure 36 - Terminal Reinsertion

POWER DISTRIBUTION

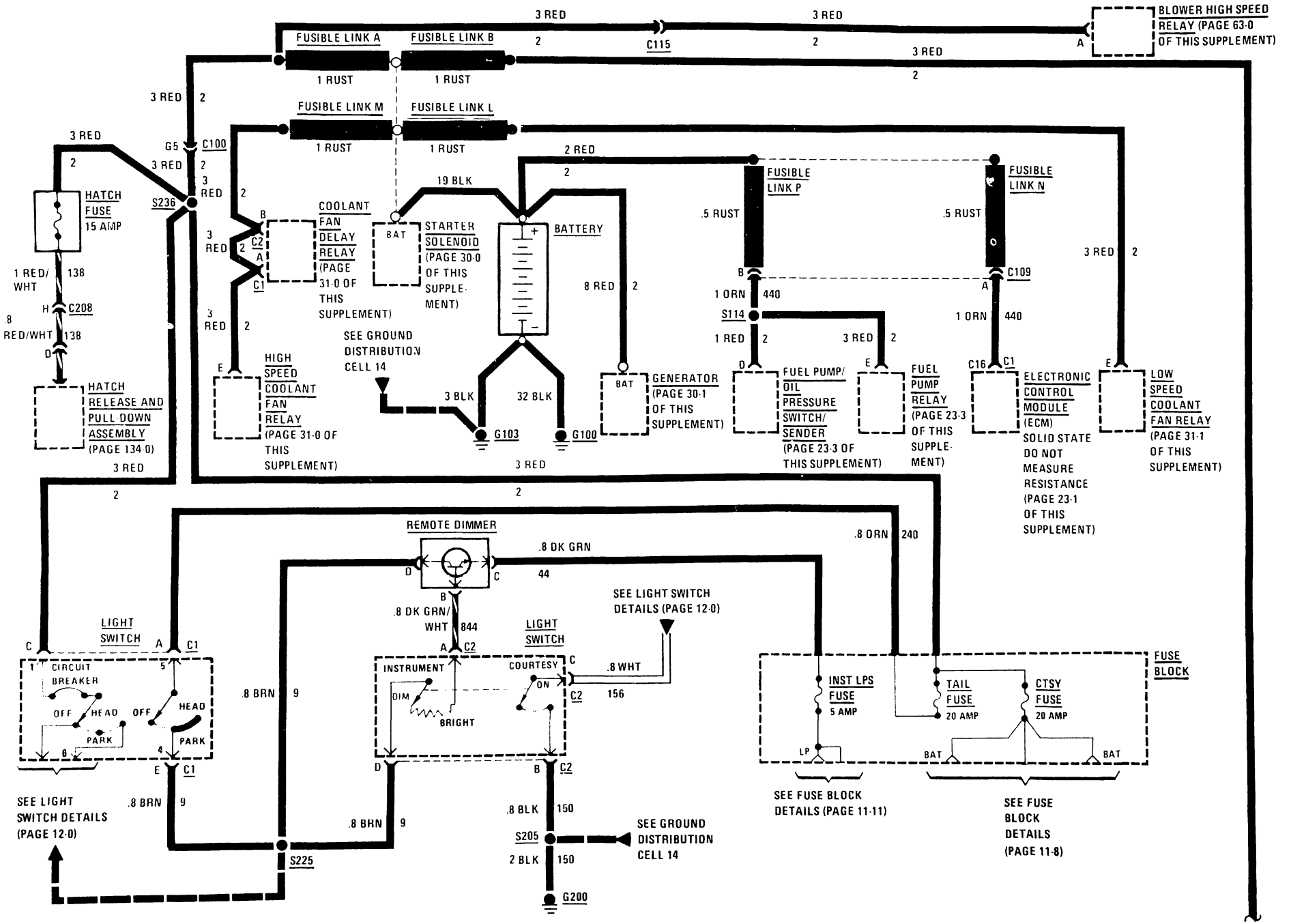

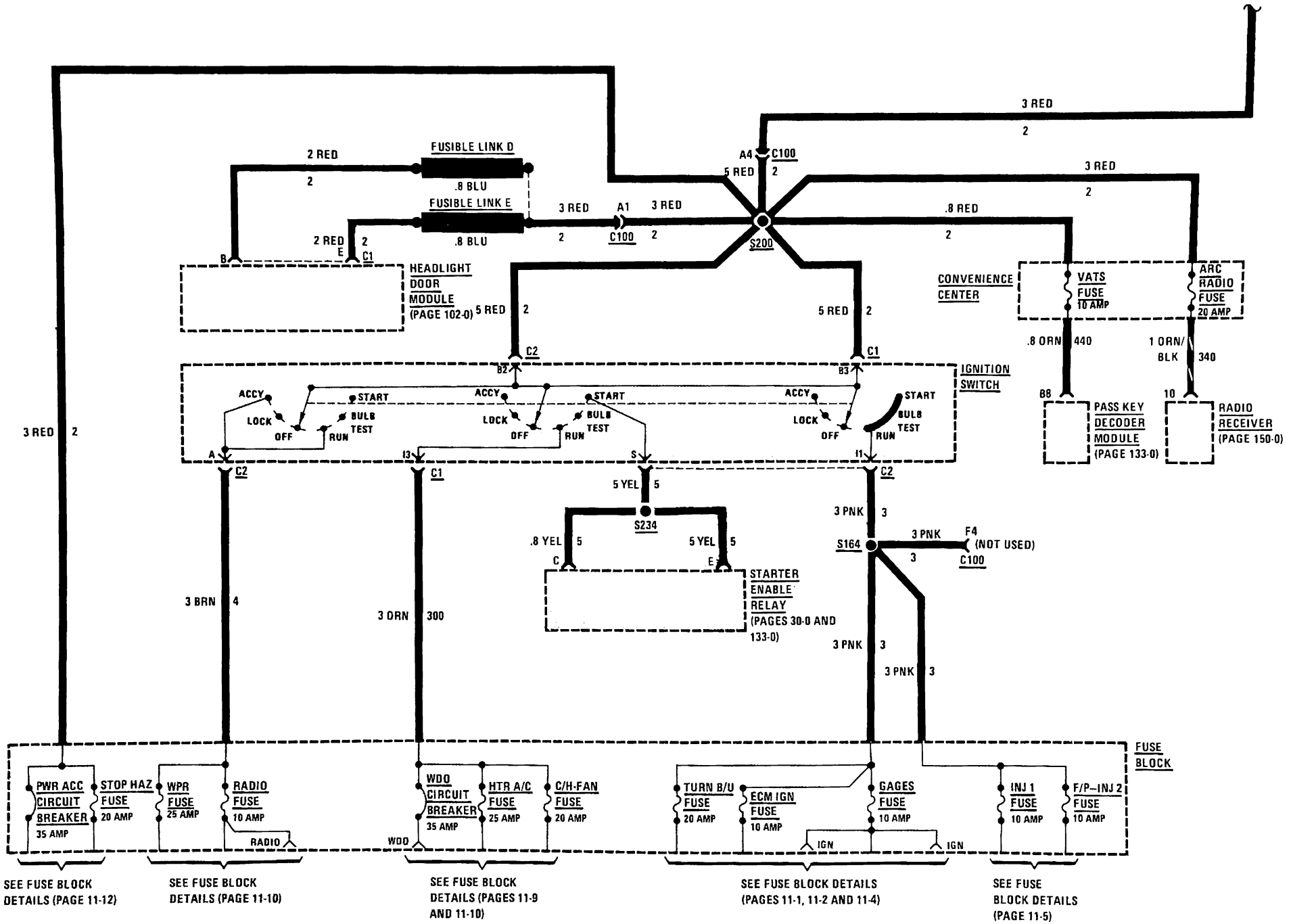
FUSIBLE LINK D
.8 BLU
FUSIBLE LINK E
.8 BLU
2 RED
3 RED
.8 RED
5 RED
A4
C100
A1
S200
HEADLIGHT DOOR MODULE (PAGE 102-0)
CONVENIENCE CENTER
VATS FUSE 10 AMP
ARC RADIO FUSE 20 AMP
.8 ORN 440
1 ORN/BLK 340
PASS KEY DECODER MODULE (PAGE 133-0)
RADIO RECEIVER (PAGE 150-0)
IGNITION SWITCH
ACCY
START
LOCK
OFF
RUN
BULB TEST
C2
C1
S234
5 YEL
.8 YEL
S164
3 PNK
F4 (NOT USED)
STARTER ENABLE RELAY (PAGES 30-0 AND 133-0)
3 BRN 4
3 ORN 300
FUSE BLOCK
PWR ACC CIRCUIT BREAKER 35 AMP
STOP HAZ FUSE 20 AMP
WPR FUSE 25 AMP
RADIO FUSE 10 AMP
WDO CIRCUIT BREAKER 35 AMP
HTR A/C FUSE 25 AMP
C/H-FAN FUSE 20 AMP
TURN B/U FUSE 20 AMP
ECM IGN FUSE 10 AMP
GAGES FUSE 10 AMP
INJ 1 FUSE 10 AMP
F/P-INJ 2 FUSE 10 AMP
RADIO
WDO
IGN
SEE FUSE BLOCK DETAILS (PAGE 11-12)
SEE FUSE BLOCK DETAILS (PAGE 11-10)
SEE FUSE BLOCK DETAILS (PAGES 11-9 AND 11-10)
SEE FUSE BLOCK DETAILS (PAGES 11-1, 11-2 AND 11-4)
SEE FUSE BLOCK DETAILS (PAGE 11-5)

FUSE BLOCK DETAILS: INJ 1 FUSE AND F/P-INJ-2 FUSE

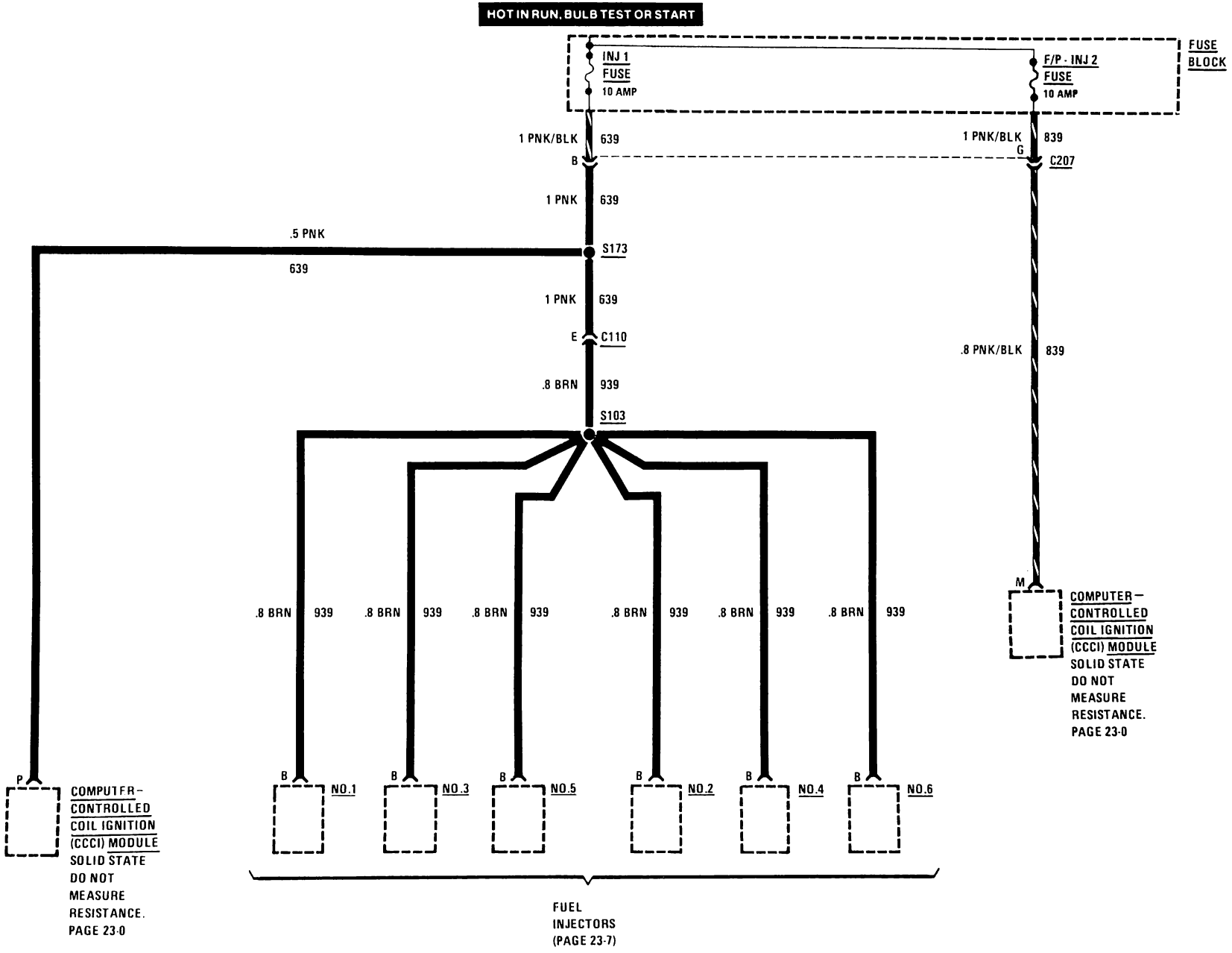

FUSE BLOCK DETAILS: ECM IGN FUSE

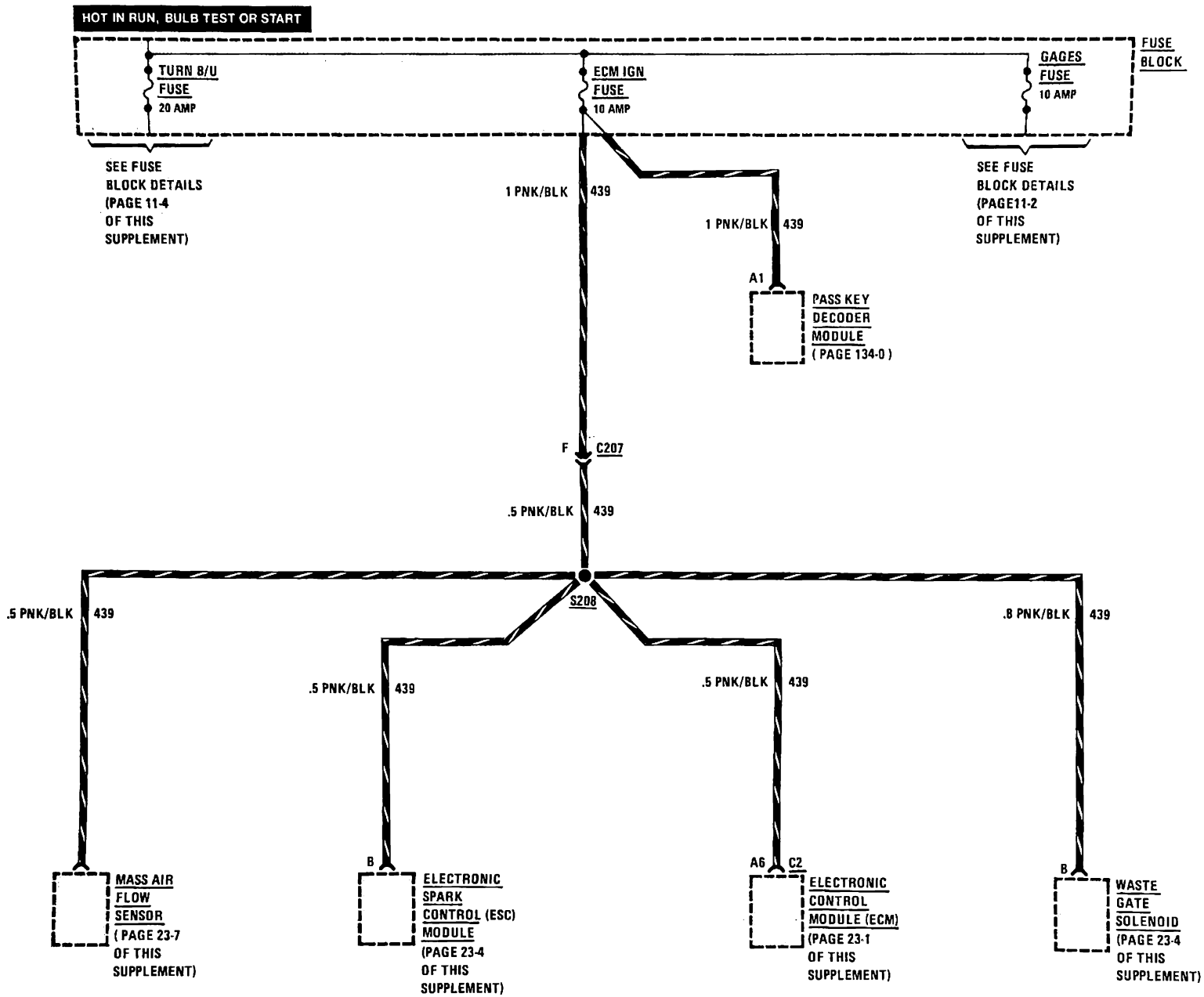

FUSE BLOCK DETAILS: GAGES FUSE

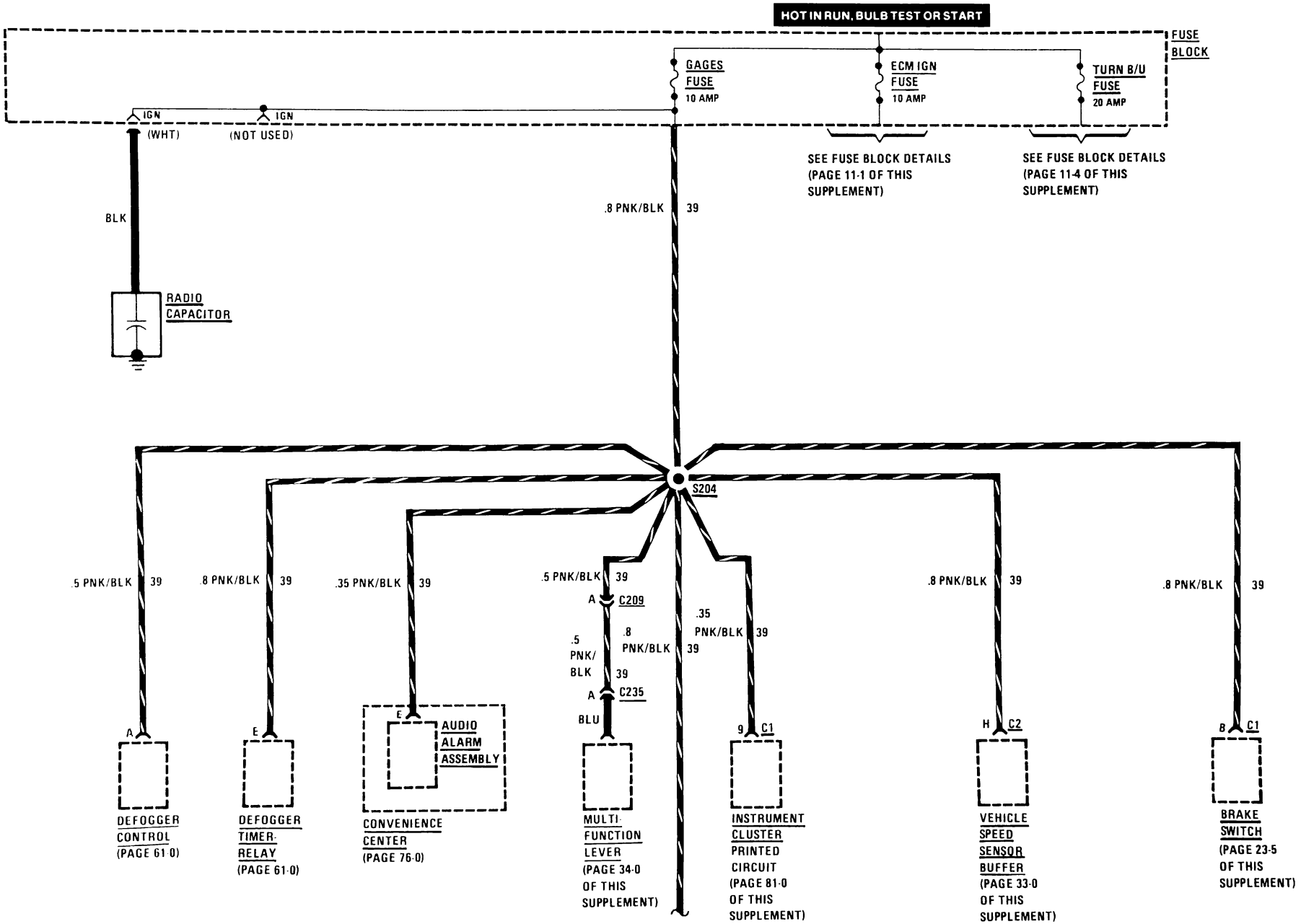

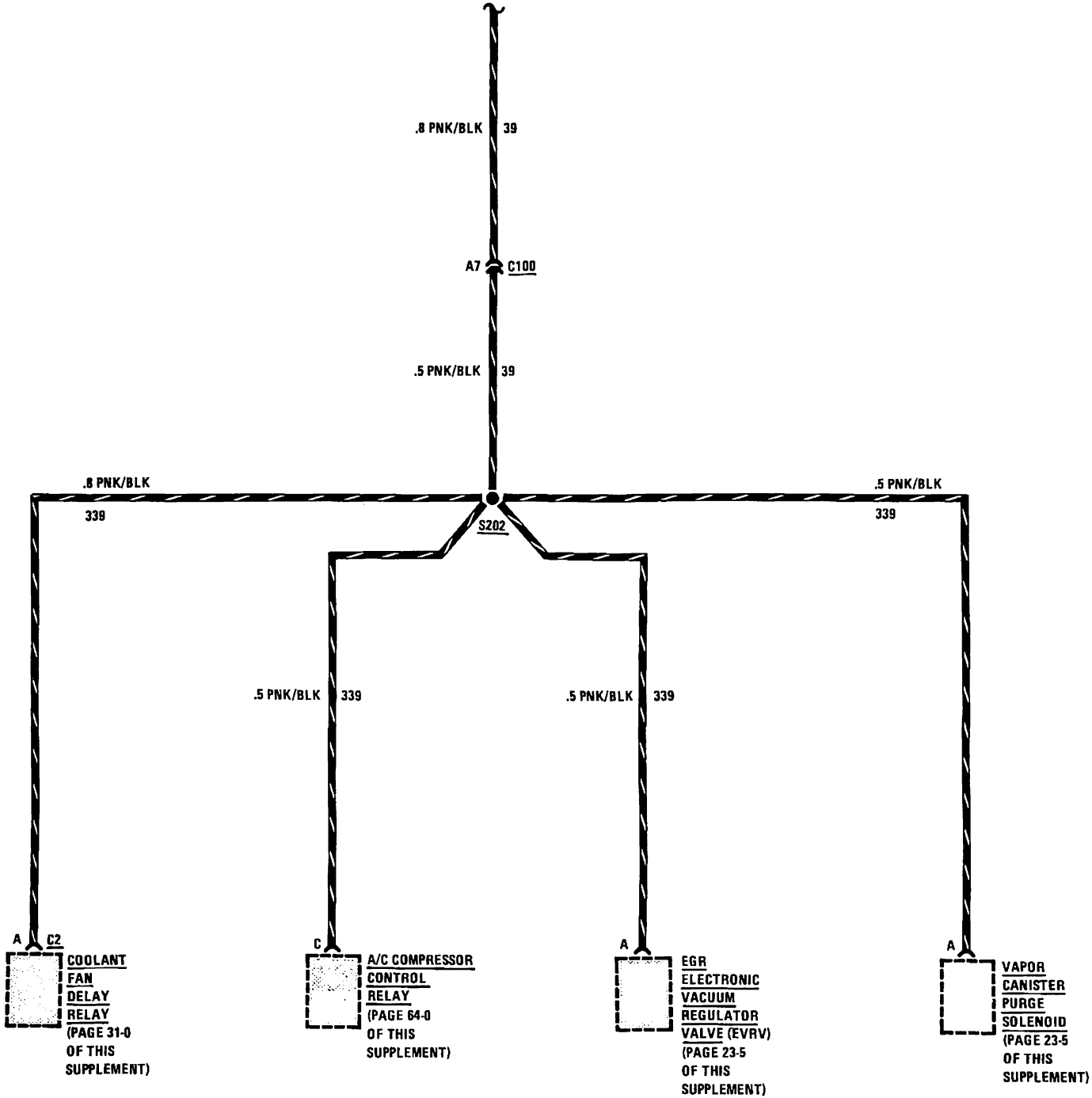
.8 PNK/BLK
39
A7
C100
.5 PNK/BLK
39
.8 PNK/BLK
339
S202
.5 PNK/BLK
339
.5 PNK/BLK
339
.5 PNK/BLK
339
A
C2
COOLANT FAN DELAY RELAY
(PAGE 31-0 OF THIS SUPPLEMENT)
C
A/C COMPRESSOR CONTROL RELAY
(PAGE 64-0 OF THIS SUPPLEMENT)
A
EGR ELECTRONIC VACUUM REGULATOR VALVE (EVRV)
(PAGE 23-5 OF THIS SUPPLEMENT)
A
VAPOR CANISTER PURGE SOLENOID
(PAGE 23-5 OF THIS SUPPLEMENT)

FUSE BLOCK DETAILS: TURN B/U FUSE

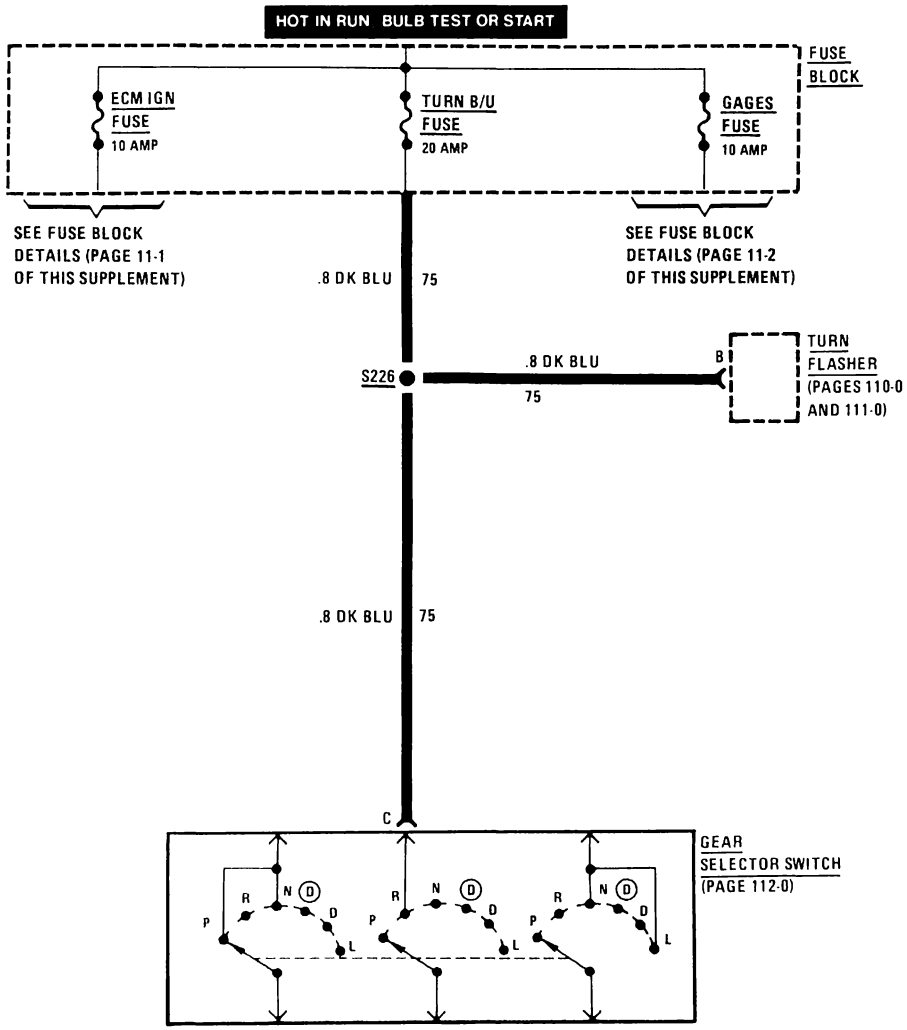

FUSE BLOCK DETAILS: C/H-FAN FUSE

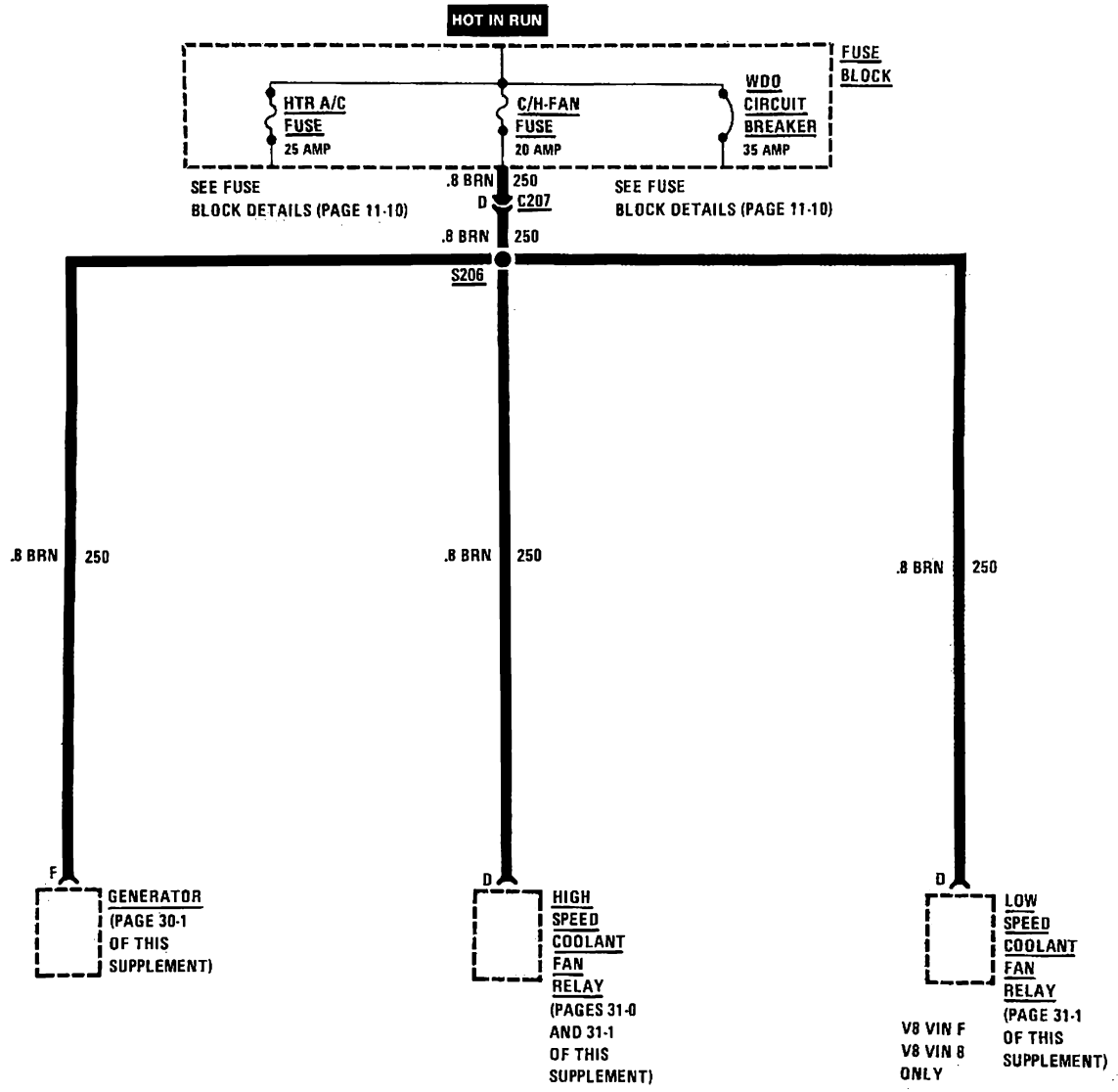

GROUND DISTRIBUTION: G118

ENGINE GROUND

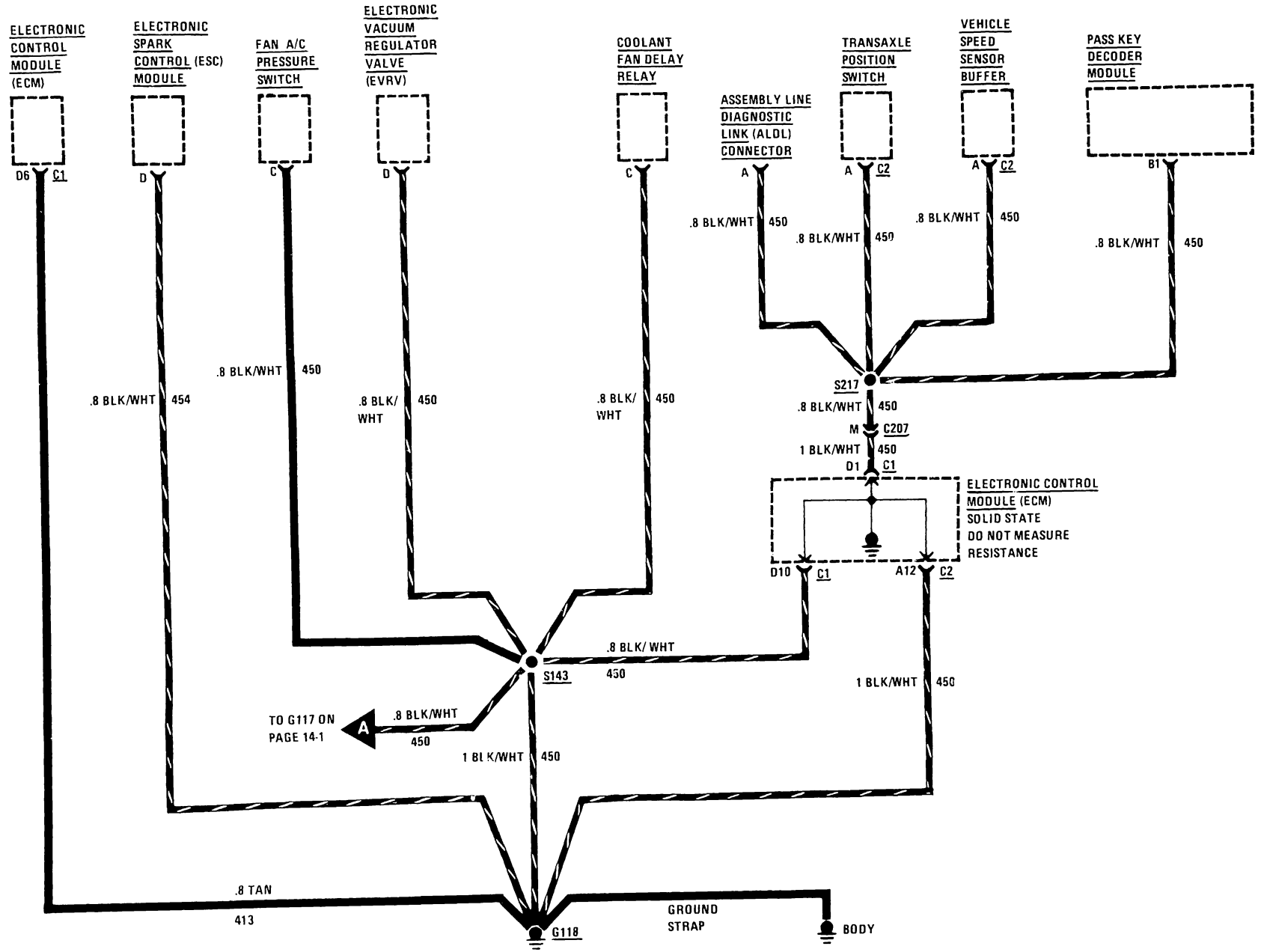

GROUND DISTRIBUTION: G117

ENGINE GROUND

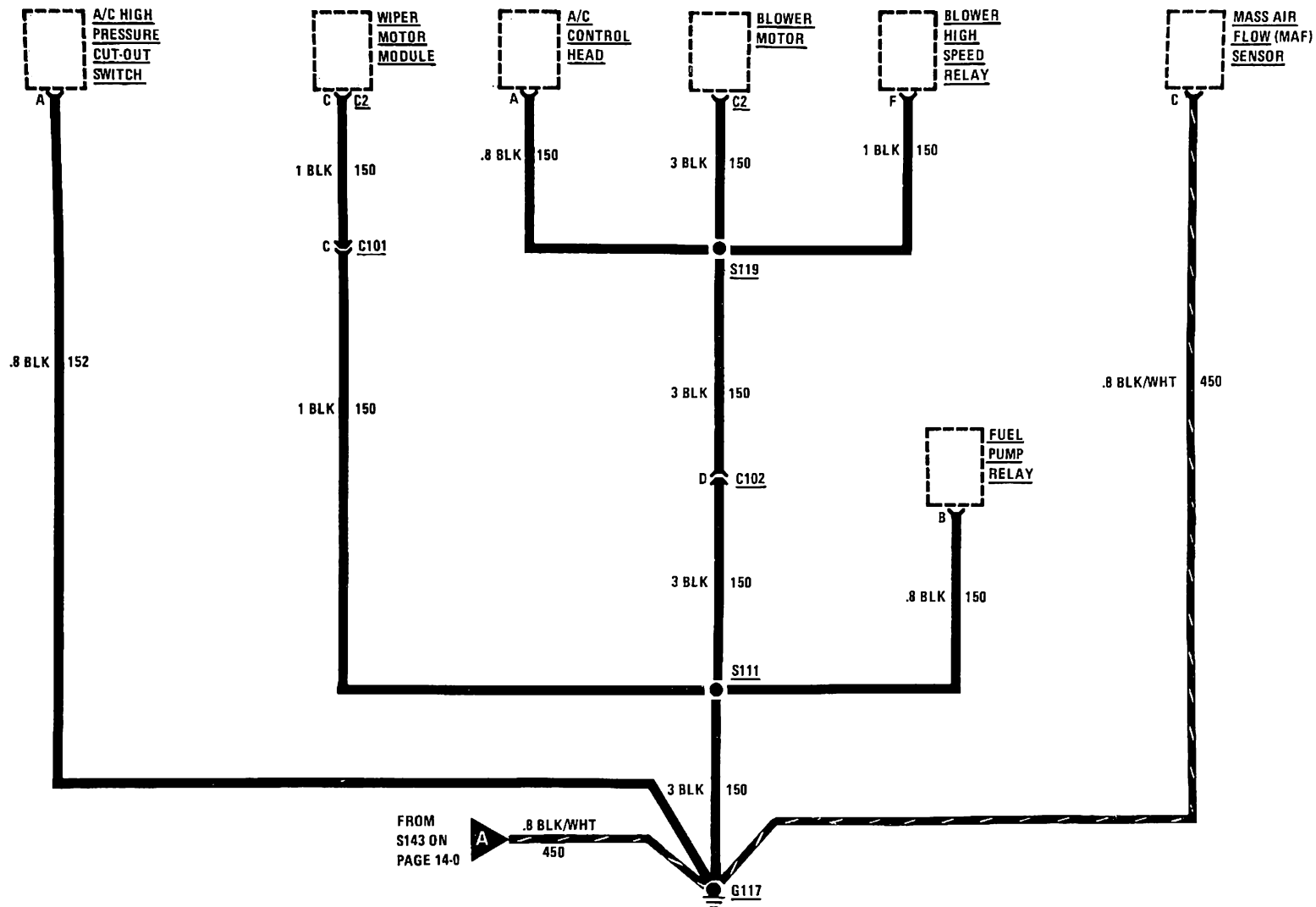

MULTI-PORT FUEL INJECTION: V6 VIN 7

IGNITION

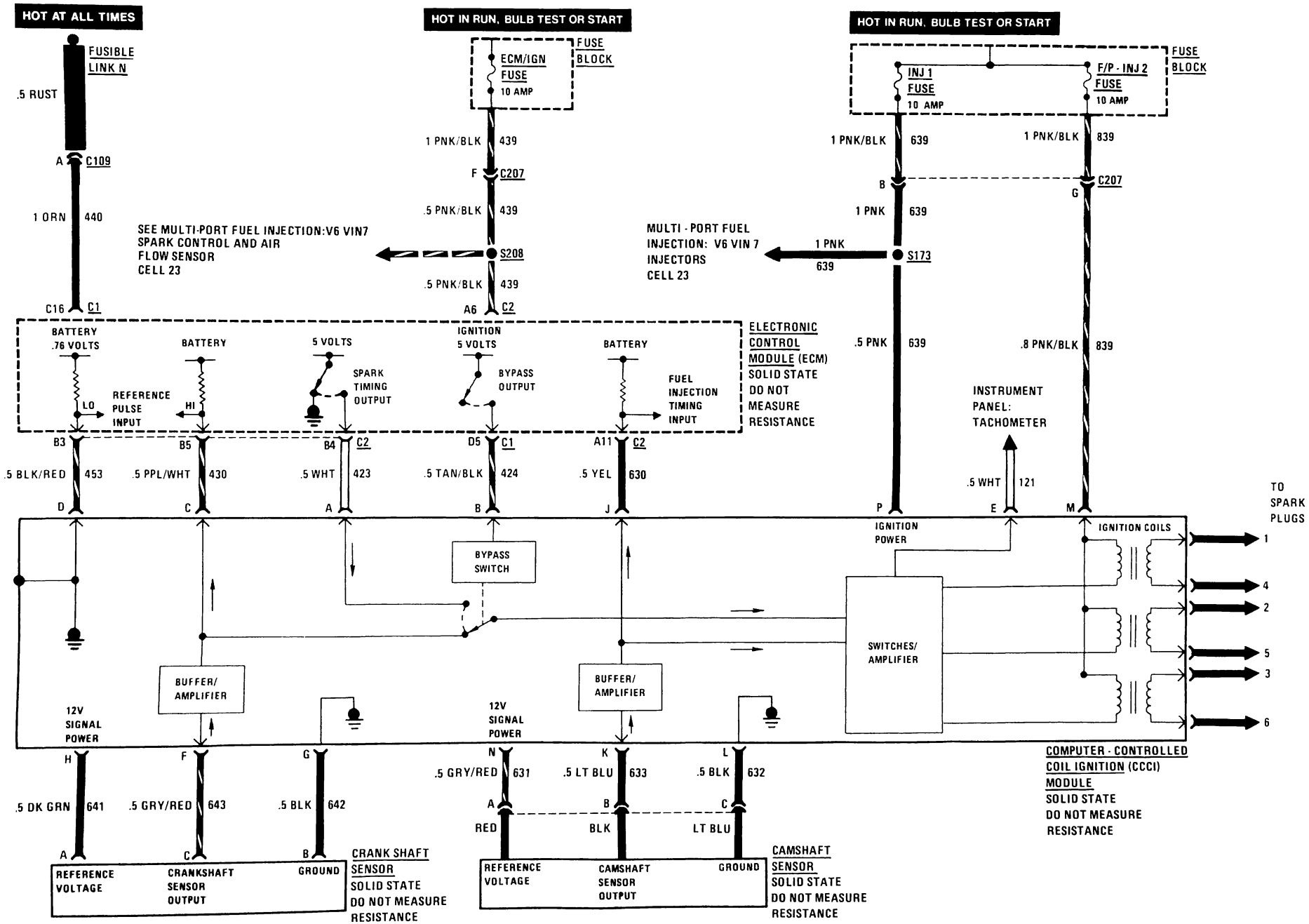

MULTI-PORT FUEL INJECTION: V6 VIN 7

POWER, GROUNDS AND "SERVICE ENGINE SOON" INDICATOR

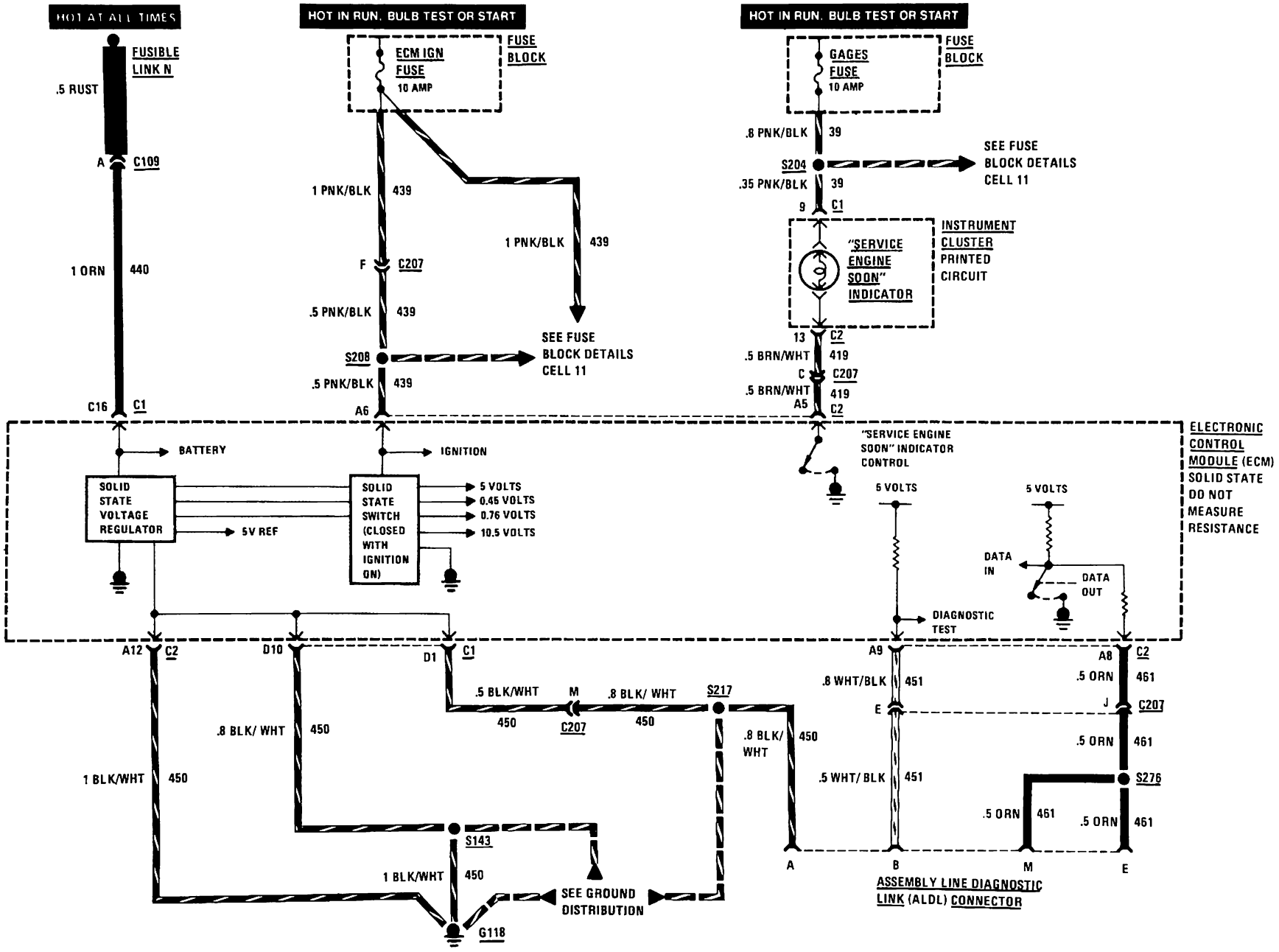

MULTI-PORT FUEL INJECTION: V6 VIN 7

INJECTORS

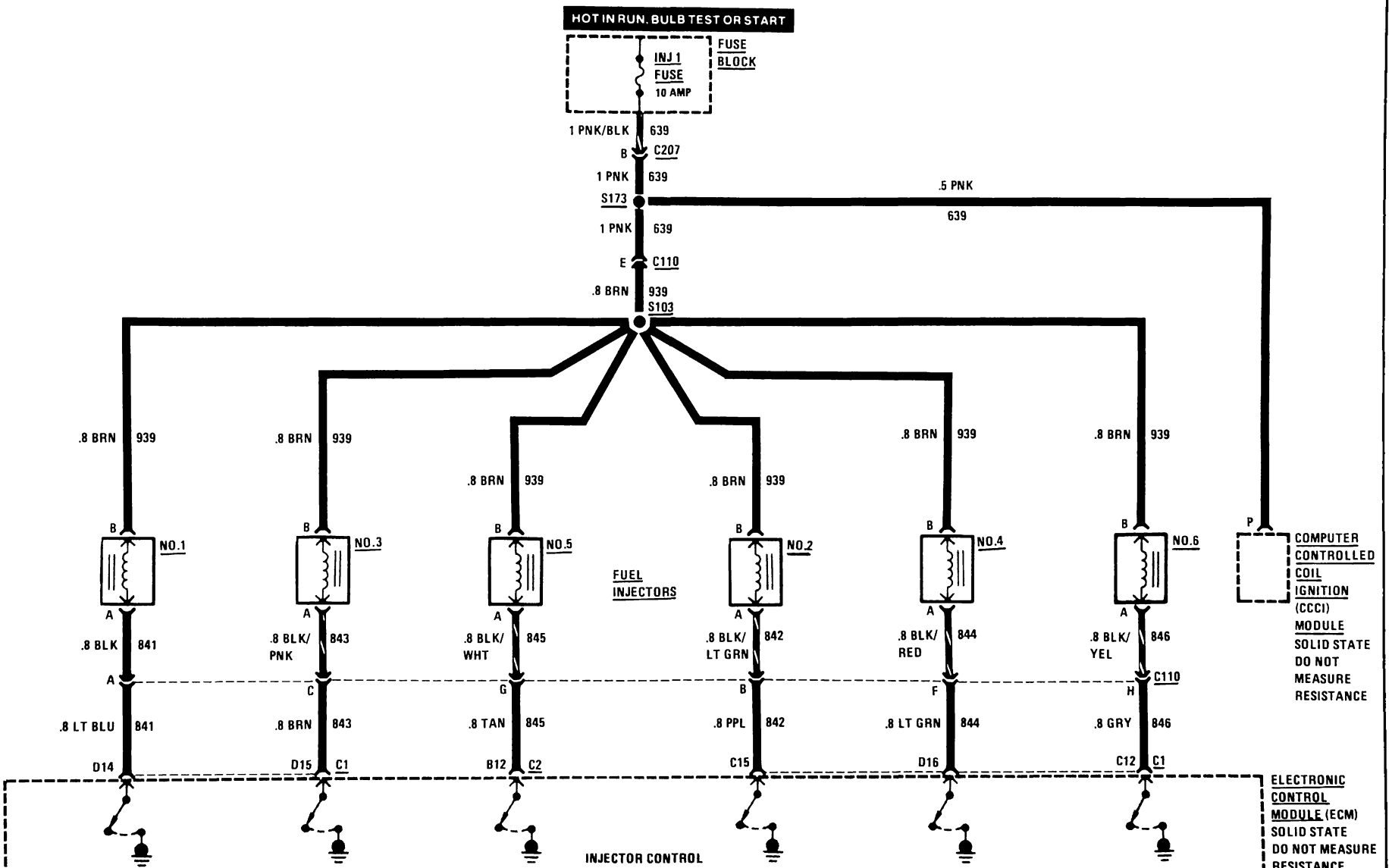

MULTI-PORT FUEL INJECTION: V6 VIN 7

FUEL CONTROL

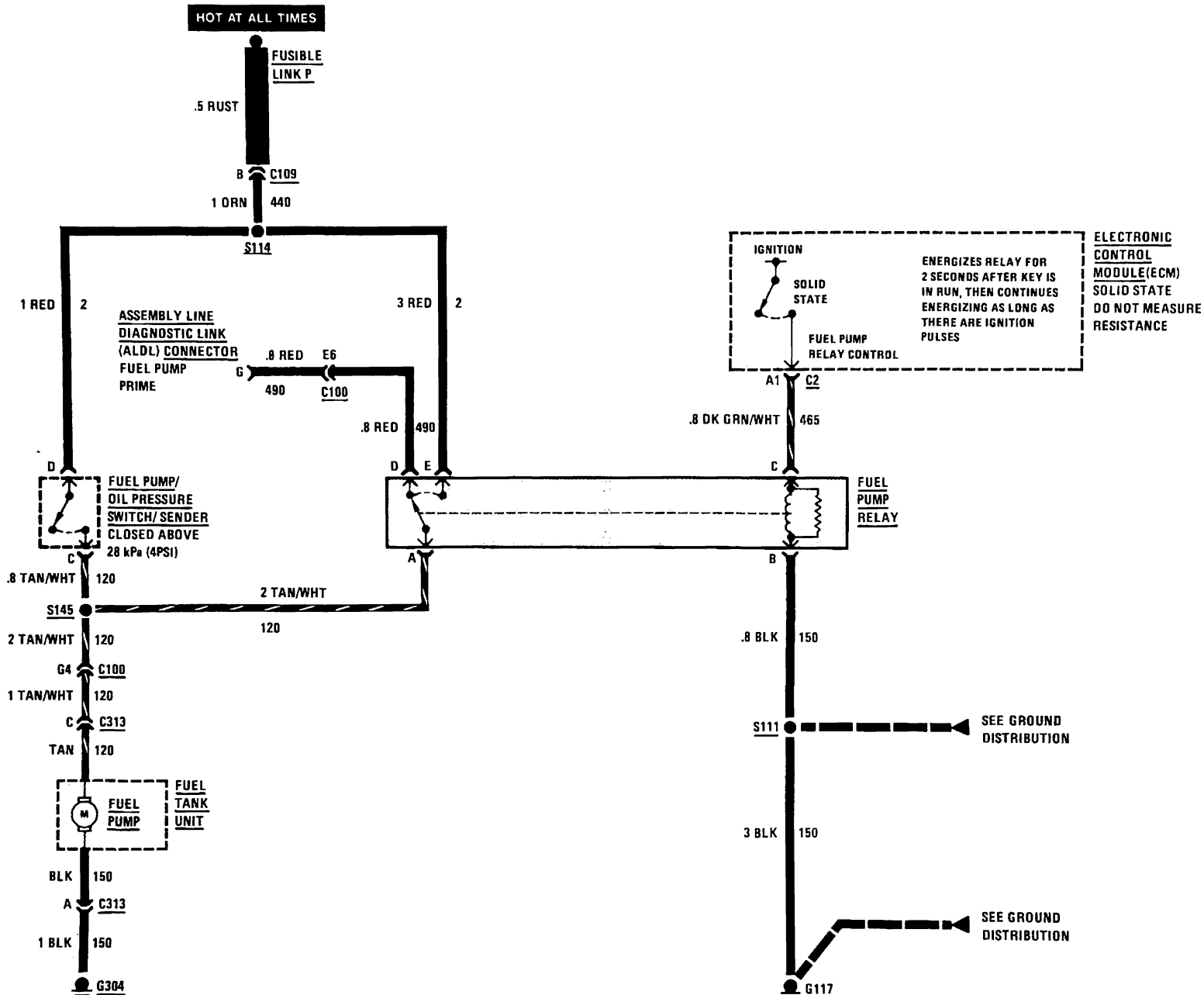

MULTI-PORT FUEL INJECTION: V6 VIN 7

ELECTRONIC SPARK CONTROL, WASTE GATE SOLENOID CONTROL

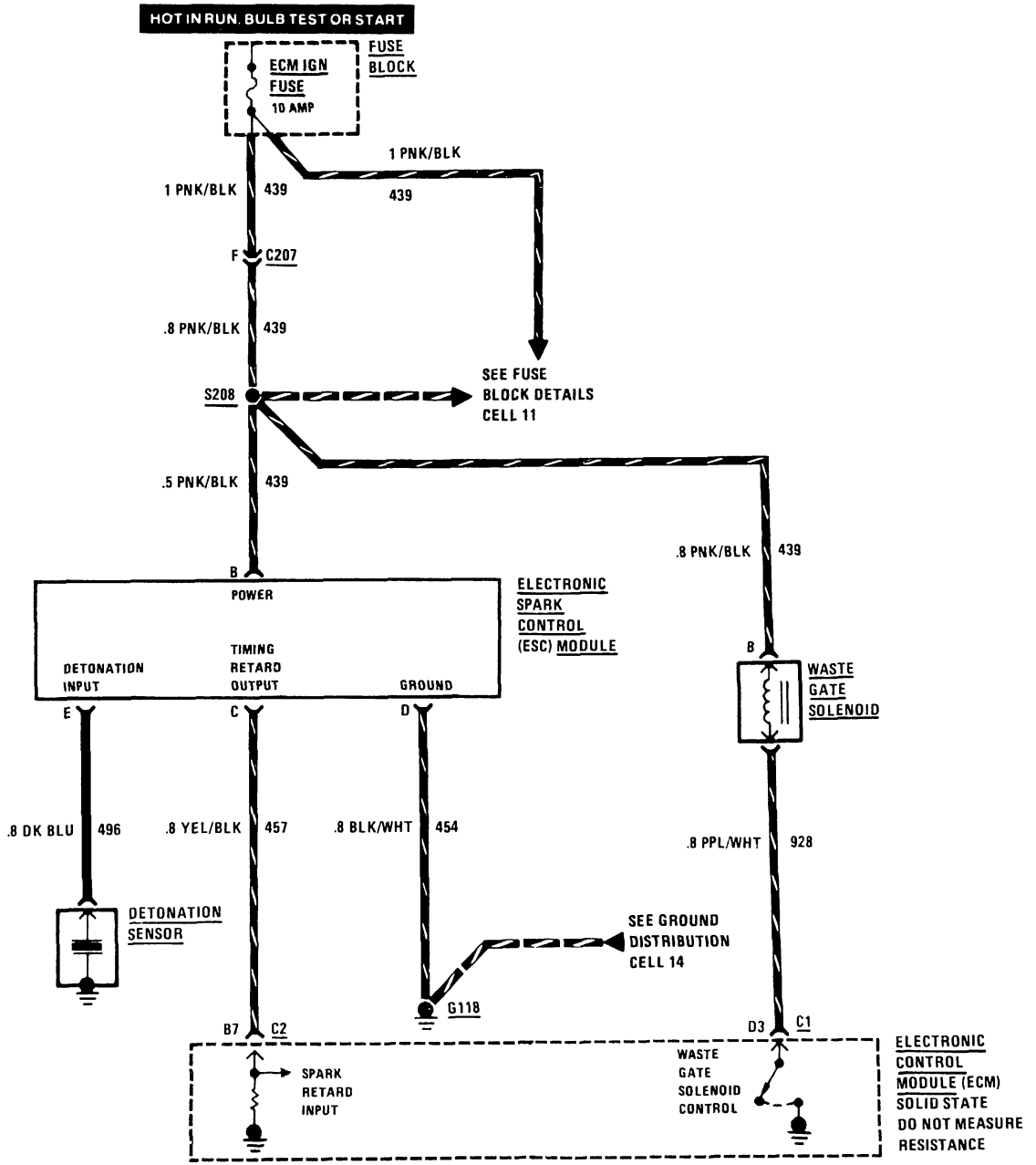

MULTI-PORT FUEL INJECTION: V6 VIN 7

TRANSMISSION CONVERTER CLUTCH AND EMISSION CONTROLS

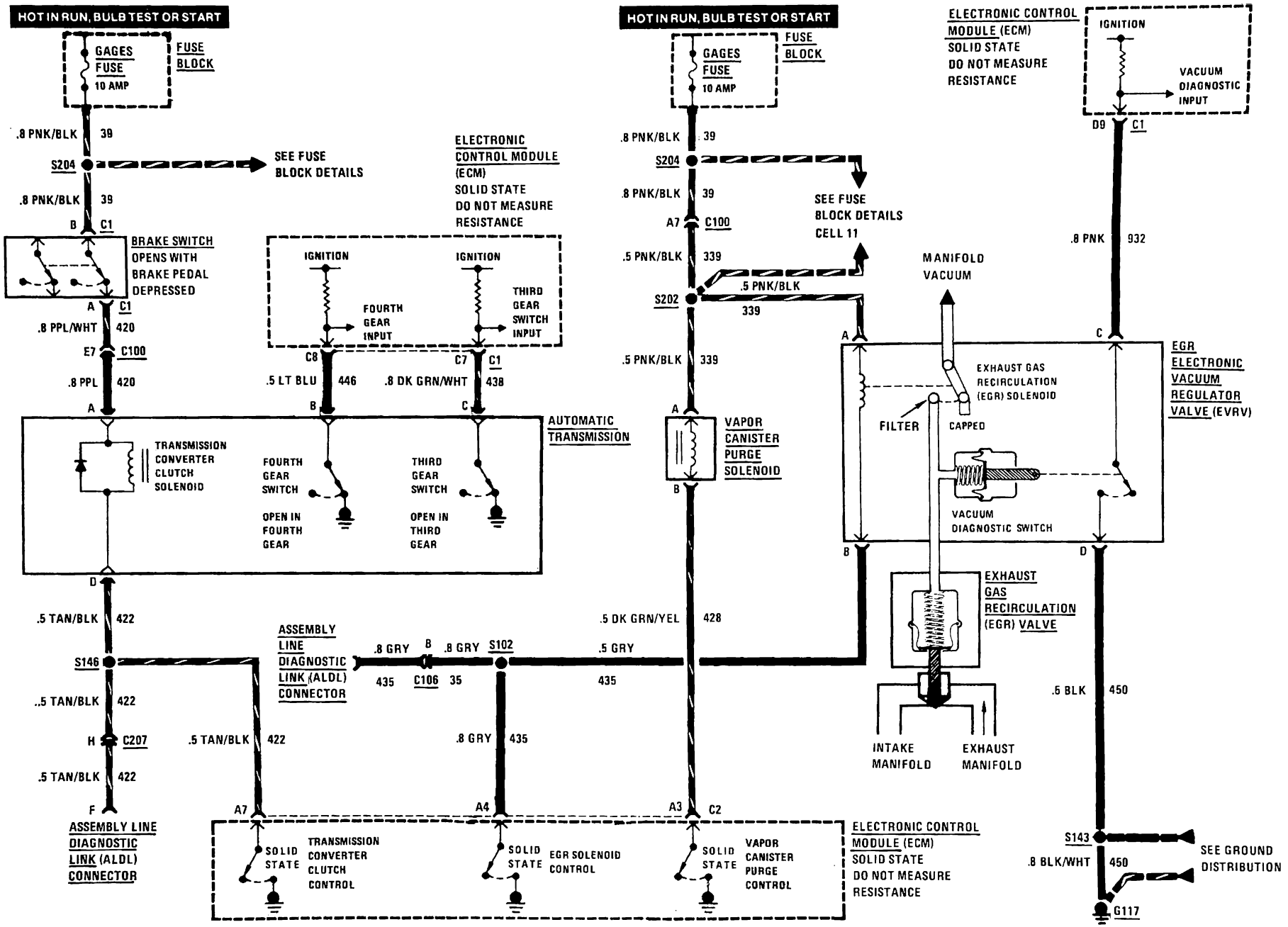

MULTI-PORT FUEL INJECTION: V6 VIN 7

VEHICLE DATA SENSORS AND IDLE SPEED CONTROL

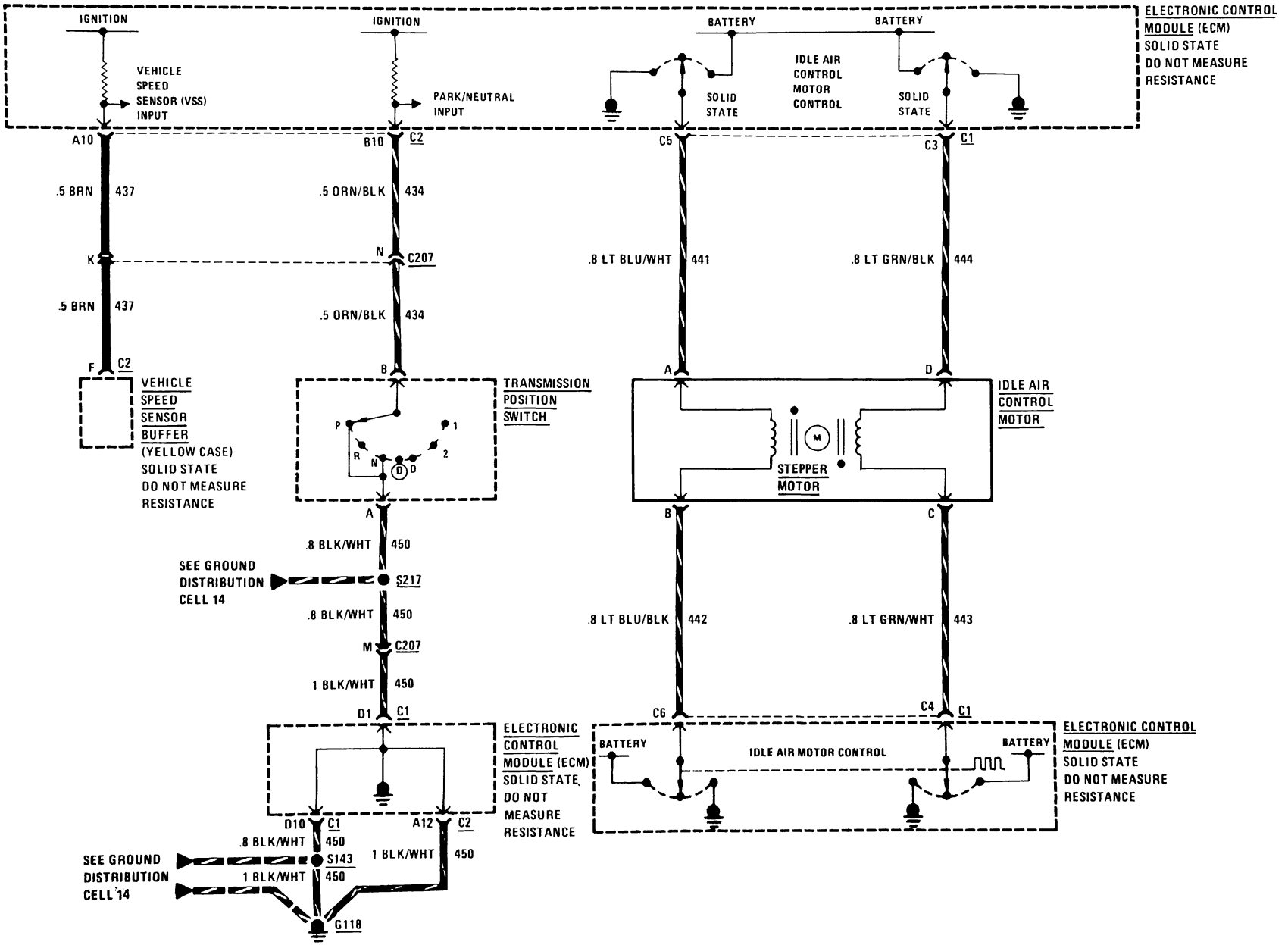

MULTI-PORT FUEL INJECTION: V6 VIN L

ENGINE DATA SENSORS

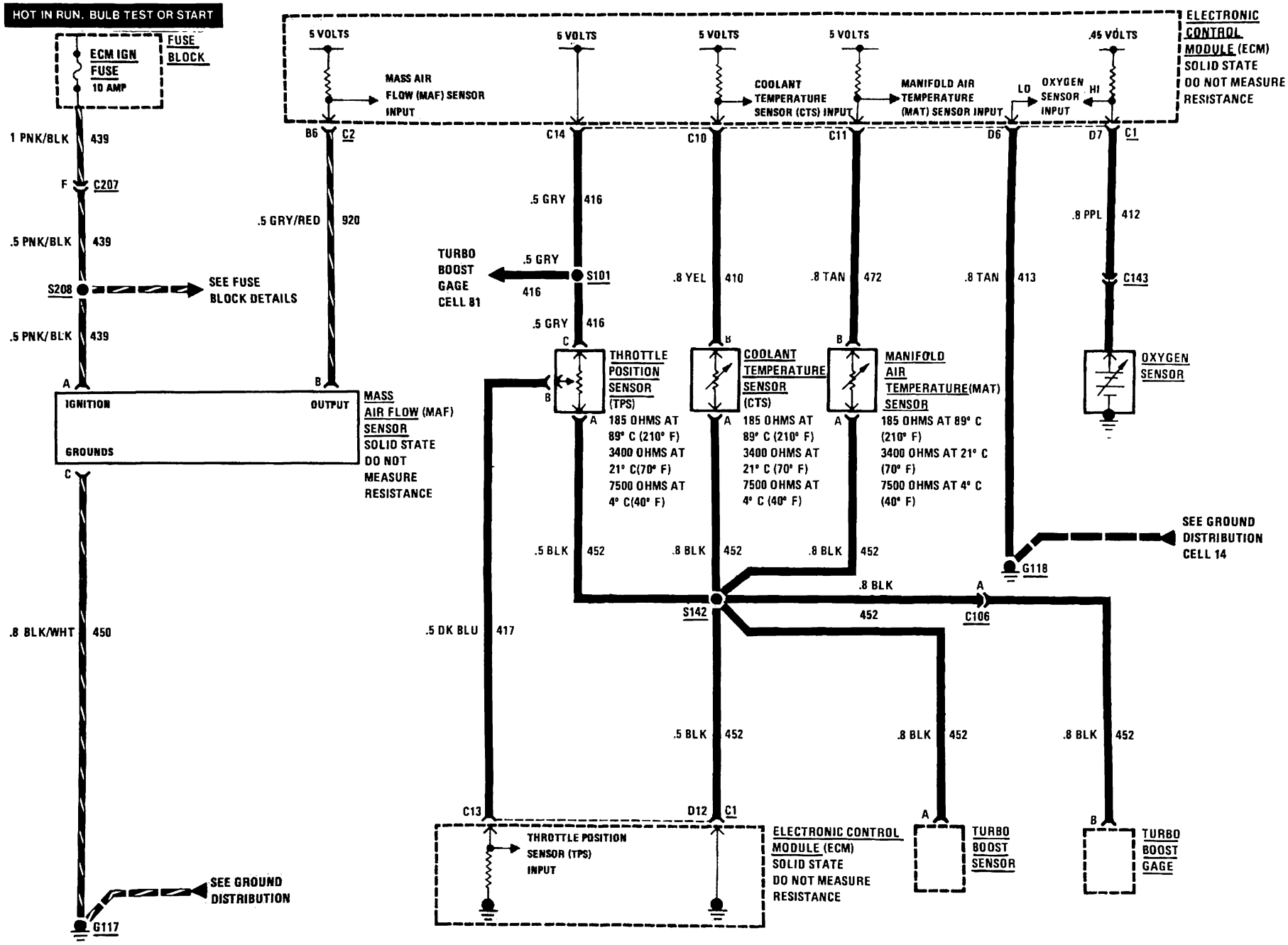

MULTI-PORT FUEL INJECTION: V6 VIN 7

ECM CONNECTOR: C1

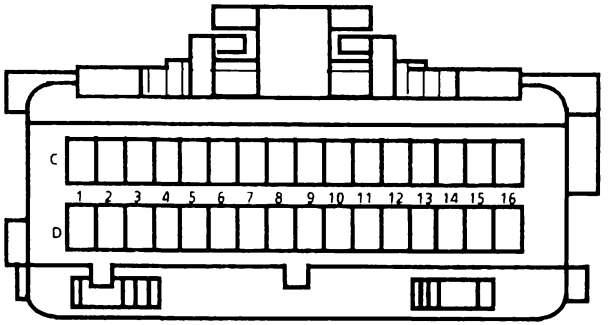

C1 BLACK

V00005 0

CAVITY	WIRE COLOR SOCKET HALF	CIRCUIT NUMBER	CIRCUIT FUNCTION
C1	–	–	NOT USED
C2	–	–	NOT USED
C3	LT GRN/BLK	444	IDLE AIR MOTOR CONTROL
C4	LT GRN/WHT	443	IDLE AIR MOTOR CONTROL
C5	LT BLU/WHT	441	IDLE AIR MOTOR CONTROL
C6	LT BLU/BLK	442	IDLE AIR MOTOR CONTROL
C7	DK GRN/WHT	438	THIRD GEAR SWITCH INPUT
C8	LT BLU	446	FOURTH GEAR SWITCH INPUT
C9	–	–	NOT USED
C10	YEL	410	COOLANT TEMPERATURE SENSOR (CTS) INPUT
C11	TAN	472	MANIFOLD AIR TEMPERATURE (MAT) INPUT
C12	GRY	846	INJECTOR CONTROL
C13	DK BLU	417	THROTTLE POSITION SENSOR (TPS) INPUT
C14	GRY	416	5 VOLT REFERENCE
C15	PPL	842	INJECTOR CONTROL
C16	ORN	440	BATTERY

CAVITY	WIRE COLOR SOCKET HALF	CIRCUIT NUMBER	CIRCUIT FUNCTION
D1	BLK/WHT	450	GROUND
D2	DK GRN	535	COOLANT FAN LO SPEED CONTROL
D3	PPL/WHT	928	WASTE GATE SOLENOID CONTROL
D4	–	–	NOT USED
D5	TAN/BLK	424	BYPASS OUTPUT SWITCH CONTROL
D6	TAN	413	OXYGEN SENSOR INPUT- LO
D7	PPL	412	OXYGEN SENSOR INPUT- HI
D8	–	–	NOT USED
D9	PNK	932	VACCUM DIAGNOSTIC INPUT
D10	BLK/WHT	450	GROUND
D11	–	–	NOT USED
D12	BLK	452	GROUND
D13	–	–	NOT USED
D14	LT BLU	841	INJECTOR CONTROL
D15	BRN	843	INJECTOR CONTROL
D16	LT GRN	844	INJECTOR CONTROL

MULTI-PORT FUEL INJECTION: V6 VIN 7

ECM CONNECTOR: C2

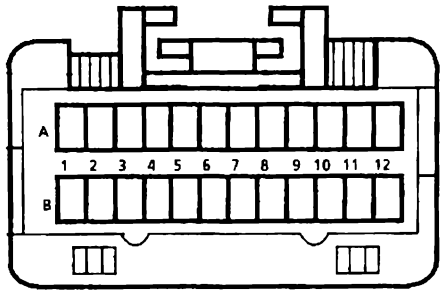

C2 BLACK

V00023.0

CAVITY	WIRE COLOR SOCKET HALF	CIRCUIT NUMBER	CIRCUIT FUNCTION
A1	DK GRN/WHT	465	FUEL PUMP RELAY CONTROL
A2	DK GRN/YEL	959	A/C COMPRESSOR RELAY CONTROL
A3	DK GRN/YEL	428	VAPOR CANISTER PURGE CONTROL
A4	GRY	435	EGR SOLENOID CONTROL
A5	BRN/WHT	419	"SERVICE ENGINE SOON" INDICATOR CONTROL
A6	PNK/BLK	439	IGNITION
A7	TAN/BLK	422	TRANSMISSION CONVERTER CLUTCH CONTROL
A8	ORN	461	SERIAL DATA IN/OUT
A9	WHT/BLK	451	DIAGNOSTIC TEST
A10	BRN	437	VEHICLE SPEED SENSOR (VSS) INPUT
A11	YEL	630	FUEL INJECTION TIMING INPUT
A12	BLK/WHT	450	GROUND

CAVITY	WIRE COLOR SOCKET HALF	CIRCUIT NUMBER	CIRCUIT FUNCTION
B1	–	–	NOT USED
B2	–	–	NOT USED
B3	BLK/RED	453	REFERENCE PULSE INPUT-LO
B4	WHT	423	ELECTRONIC SPARK TIMING (EST) OUTPUT
B5	PPL/WHT	430	REFERENCE PULSE INPUT-HI
B6	GRY/RED	920	MASS AIR FLOW (MAF) SENSOR INPUT
B7	YEL/BLK	457	SPARK RETARD INNPUT
B8	LT BLU	67	A/C "ON" INPUT
B9	–	–	NOT USED
B10	ORN/BLK	434	PARK/NEUTRAL IJPUT
B11	–	–	NOT USED
B12	TAN	845	INJECTOR CONTROL

STARTER AND CHARGING SYSTEM

STARTER

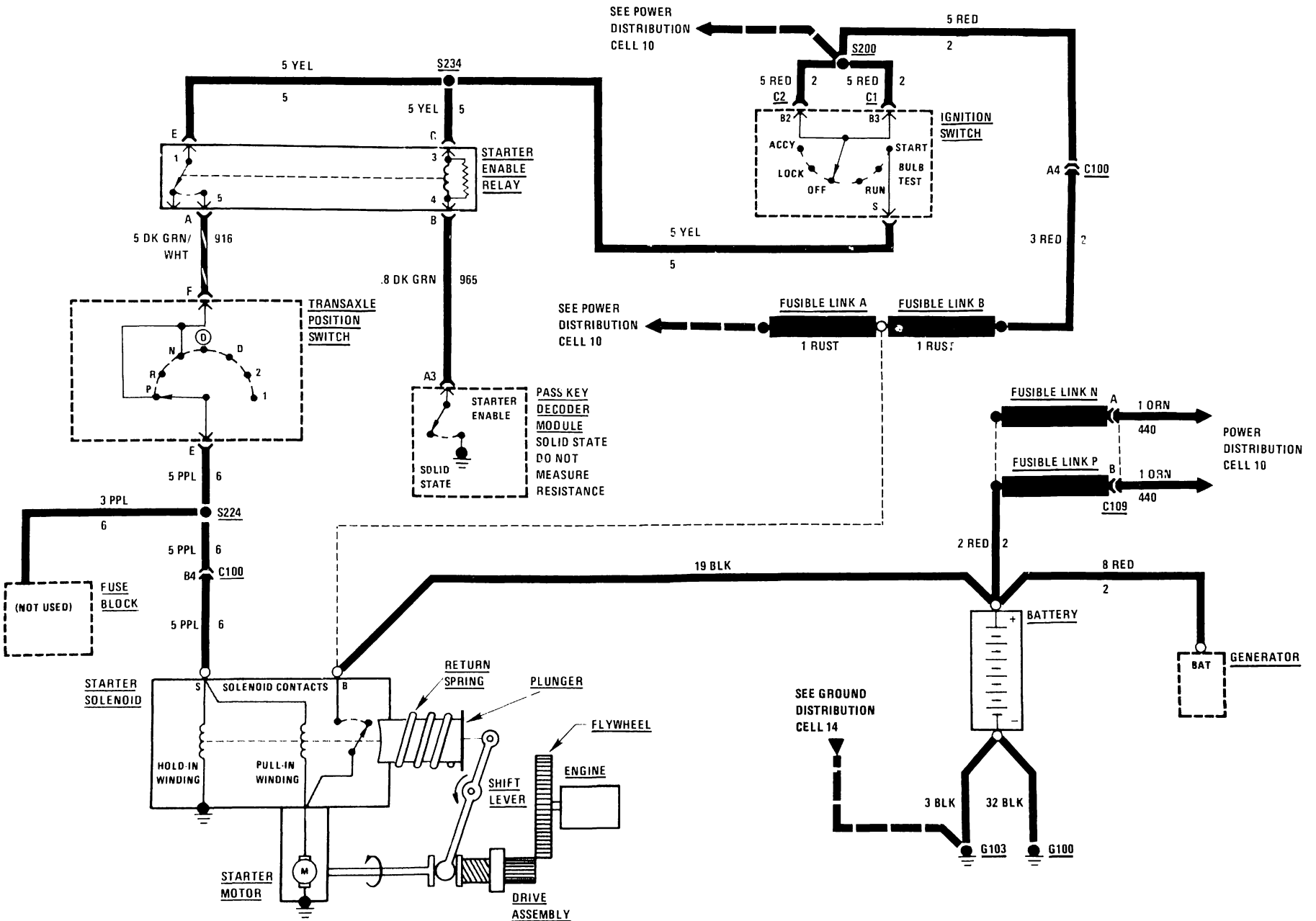

CHARGING

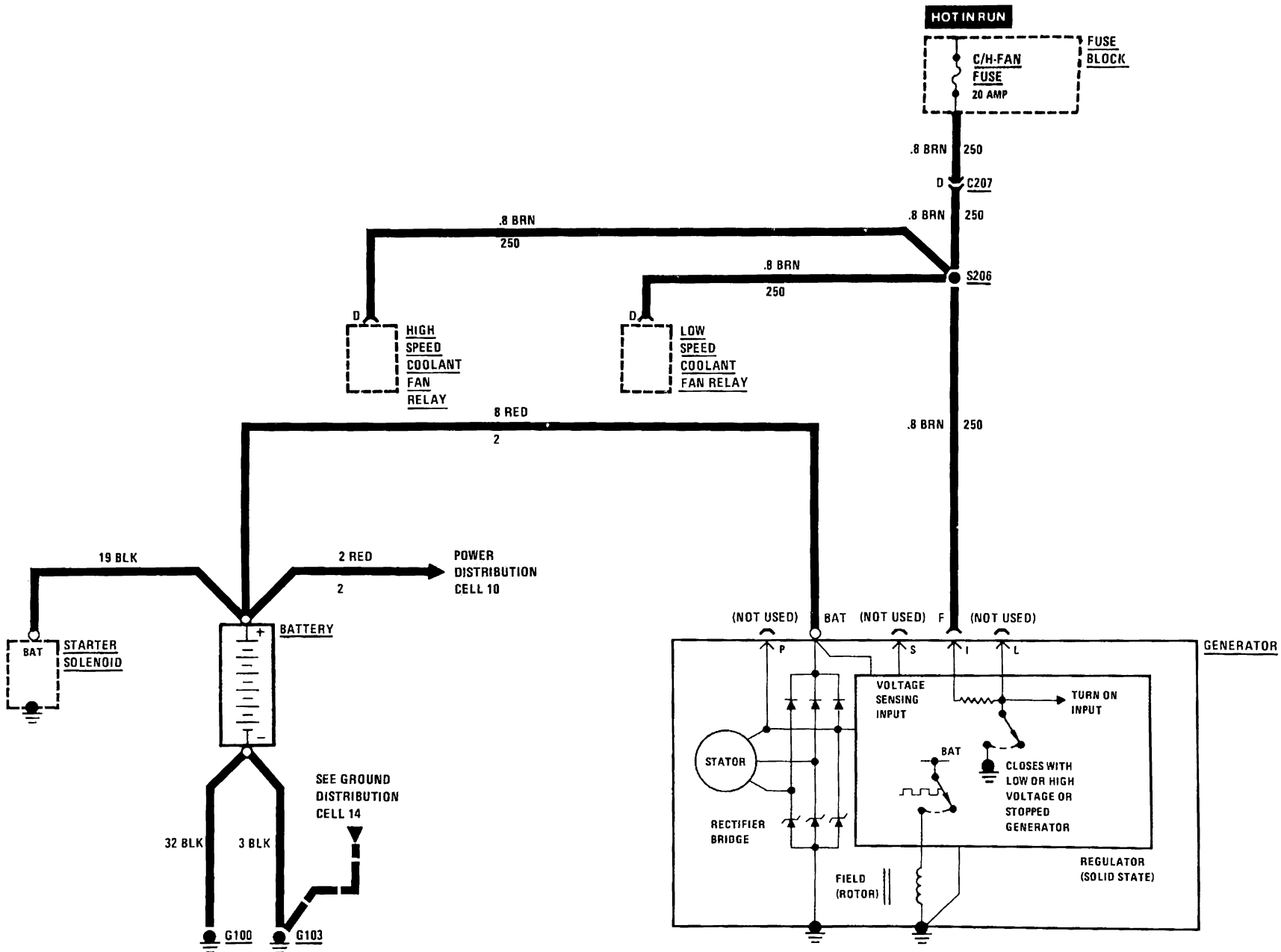
HOT IN RUN
FUSE BLOCK
C/H-FAN FUSE
20 AMP
.8 BRN
250
D
C207
.8 BRN
250
.8 BRN
250
S206
.8 BRN
250
D
HIGH SPEED COOLANT FAN RELAY
D
LOW SPEED COOLANT FAN RELAY
8 RED
2
.8 BRN
250
19 BLK
2 RED
2
POWER DISTRIBUTION CELL 10
BAT
STARTER SOLENOID
BATTERY
+
−
SEE GROUND DISTRIBUTION CELL 14
32 BLK
3 BLK
G100
G103
(NOT USED)
BAT
(NOT USED)
F
(NOT USED)
P
S
I
L
GENERATOR
VOLTAGE SENSING INPUT
TURN ON INPUT
STATOR
BAT
CLOSES WITH LOW OR HIGH VOLTAGE OR STOPPED GENERATOR
RECTIFIER BRIDGE
REGULATOR (SOLID STATE)
FIELD (ROTOR)

COOLANT FAN

HIGH SPEED COOLANT FAN

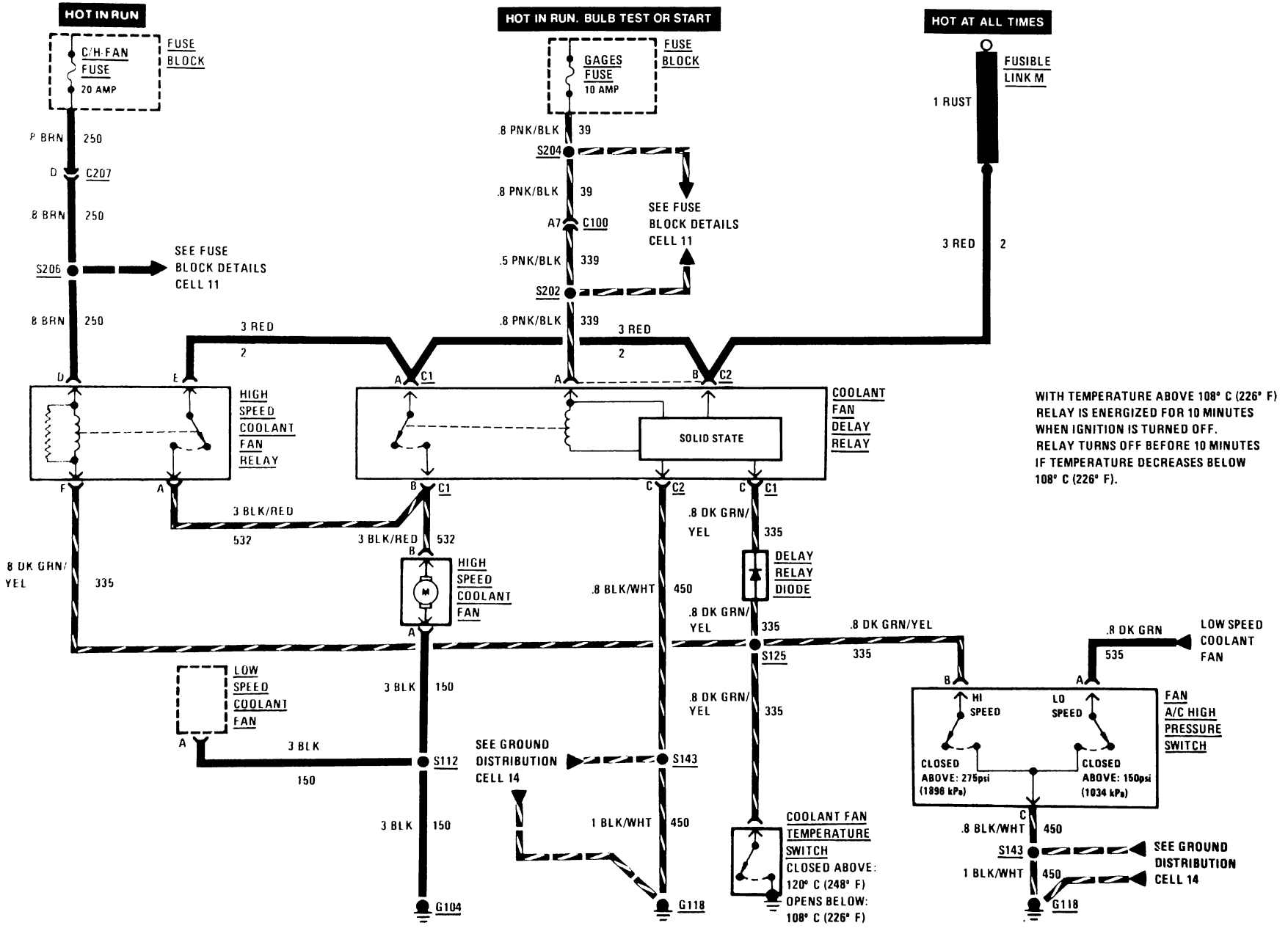

COOLANT FAN

LOW SPEED COOLANT FAN

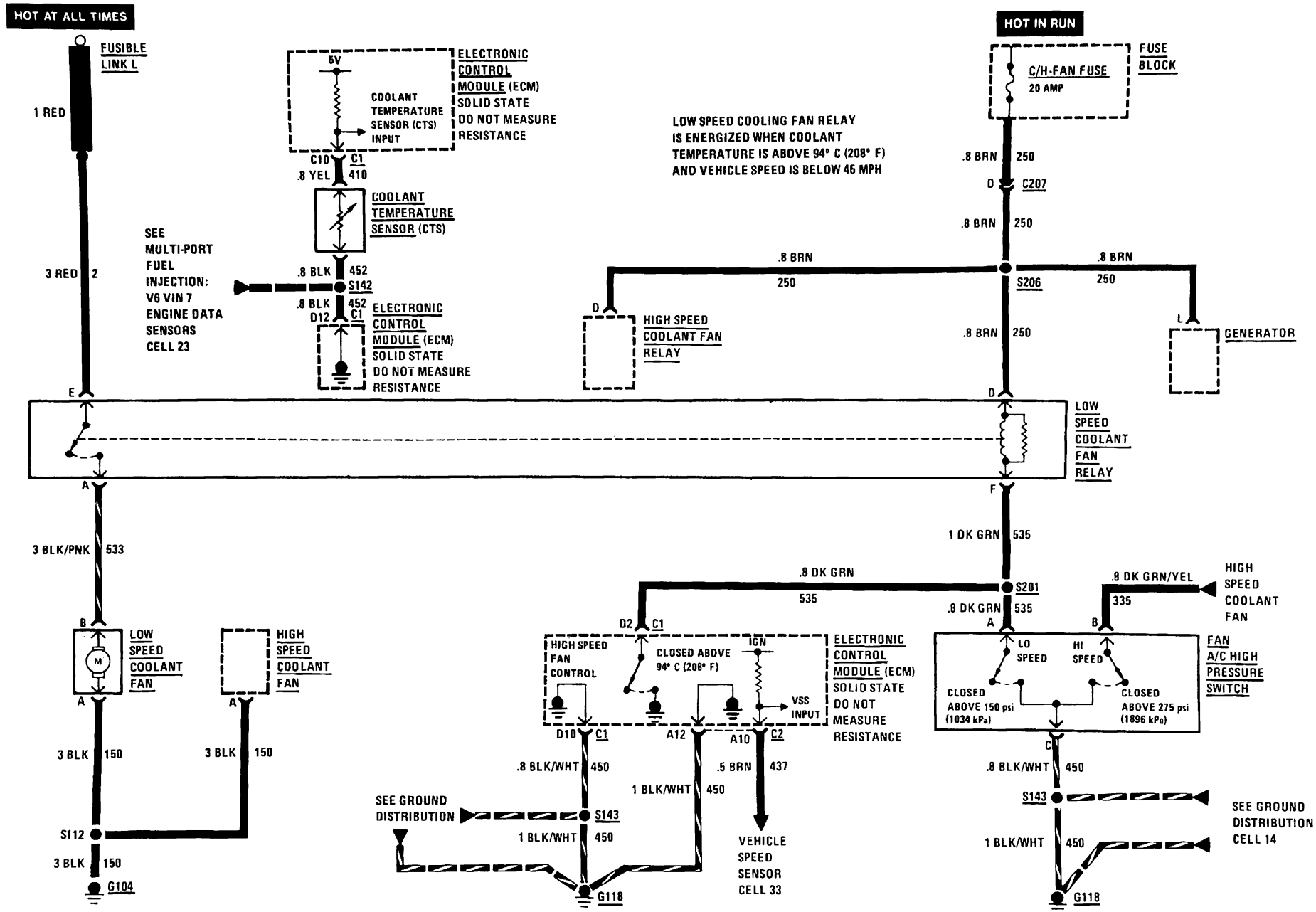

VEHICLE SPEED SENSOR

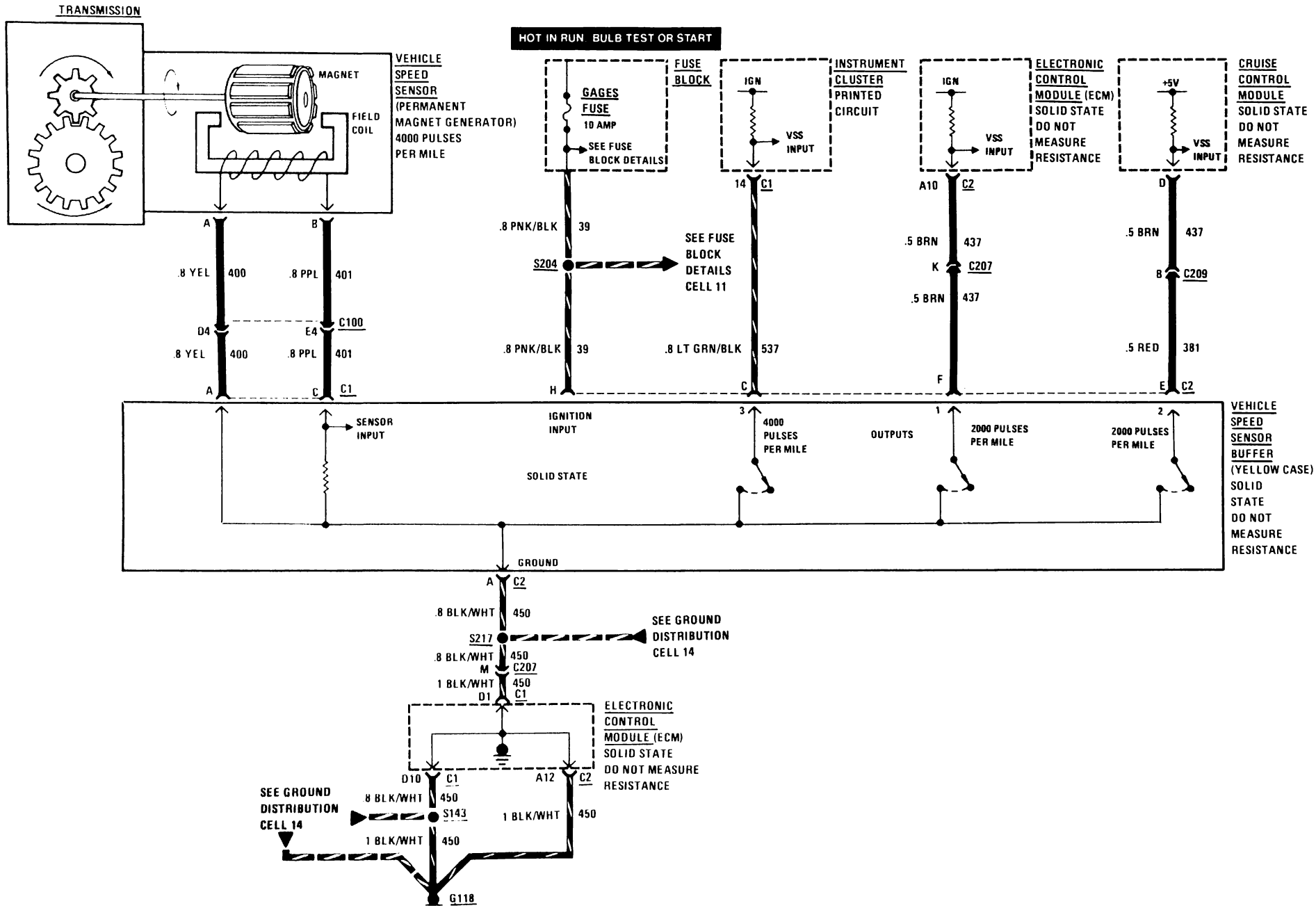

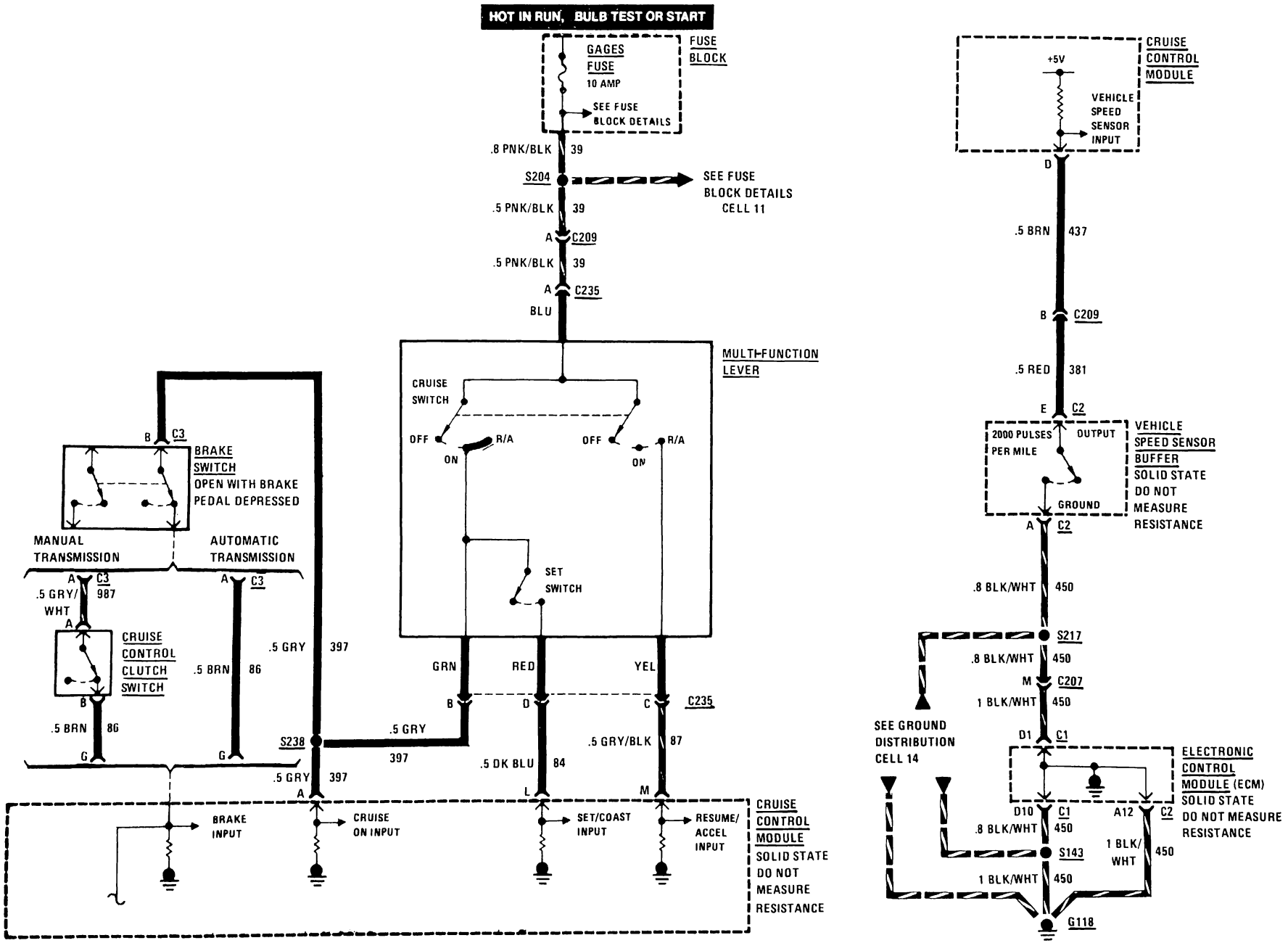
HOT IN RUN, BULB TEST OR START
GAGES FUSE 10 AMP
FUSE BLOCK
SEE FUSE BLOCK DETAILS
.8 PNK/BLK 39
S204
SEE FUSE BLOCK DETAILS CELL 11
.5 PNK/BLK 39
A C209
.5 PNK/BLK 39
A C235
BLU
MULTI-FUNCTION LEVER
CRUISE SWITCH
OFF
R/A
ON
SET SWITCH
B C3
BRAKE SWITCH
OPEN WITH BRAKE PEDAL DEPRESSED
MANUAL TRANSMISSION
AUTOMATIC TRANSMISSION
A C3
.5 GRY/WHT 987
A
CRUISE CONTROL CLUTCH SWITCH
B
.5 BRN 86
G
A C3
.5 BRN 86
G
.5 GRY 397
S238
.5 GRY 397
.5 GRY 397
A
GRN
RED
YEL
B
D
C C235
.5 GRY/BLK 87
.5 DK BLU 84
L
M
BRAKE INPUT
CRUISE ON INPUT
SET/COAST INPUT
RESUME/ ACCEL INPUT
CRUISE CONTROL MODULE
SOLID STATE
DO NOT MEASURE RESISTANCE
+5V
VEHICLE SPEED SENSOR INPUT
CRUISE CONTROL MODULE
D
.5 BRN 437
B C209
.5 RED 381
E C2
2000 PULSES PER MILE
OUTPUT
GROUND
VEHICLE SPEED SENSOR BUFFER
SOLID STATE
DO NOT MEASURE RESISTANCE
A C2
.8 BLK/WHT 450
S217
.8 BLK/WHT 450
M C207
1 BLK/WHT 450
SEE GROUND DISTRIBUTION CELL 14
D1 C1
ELECTRONIC CONTROL MODULE (ECM)
SOLID STATE
DO NOT MEASURE RESISTANCE
D10 C1
.8 BLK/WHT 450
A12 C2
1 BLK/WHT 450
S143
1 BLK/WHT 450
G118

CRUISE CONTROL

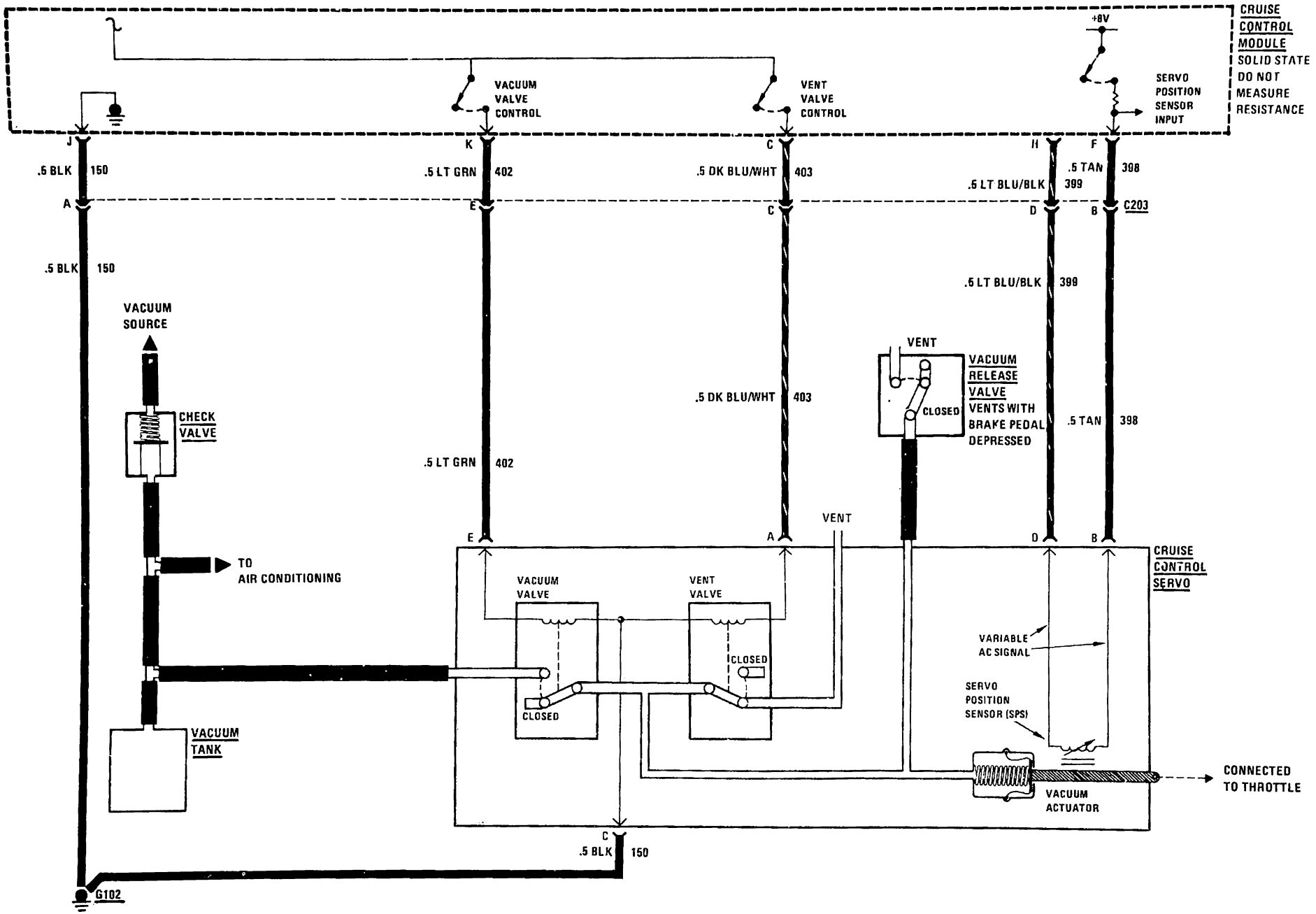

AIR CONDITIONING: BLOWER CONTROLS

C60, MANUAL

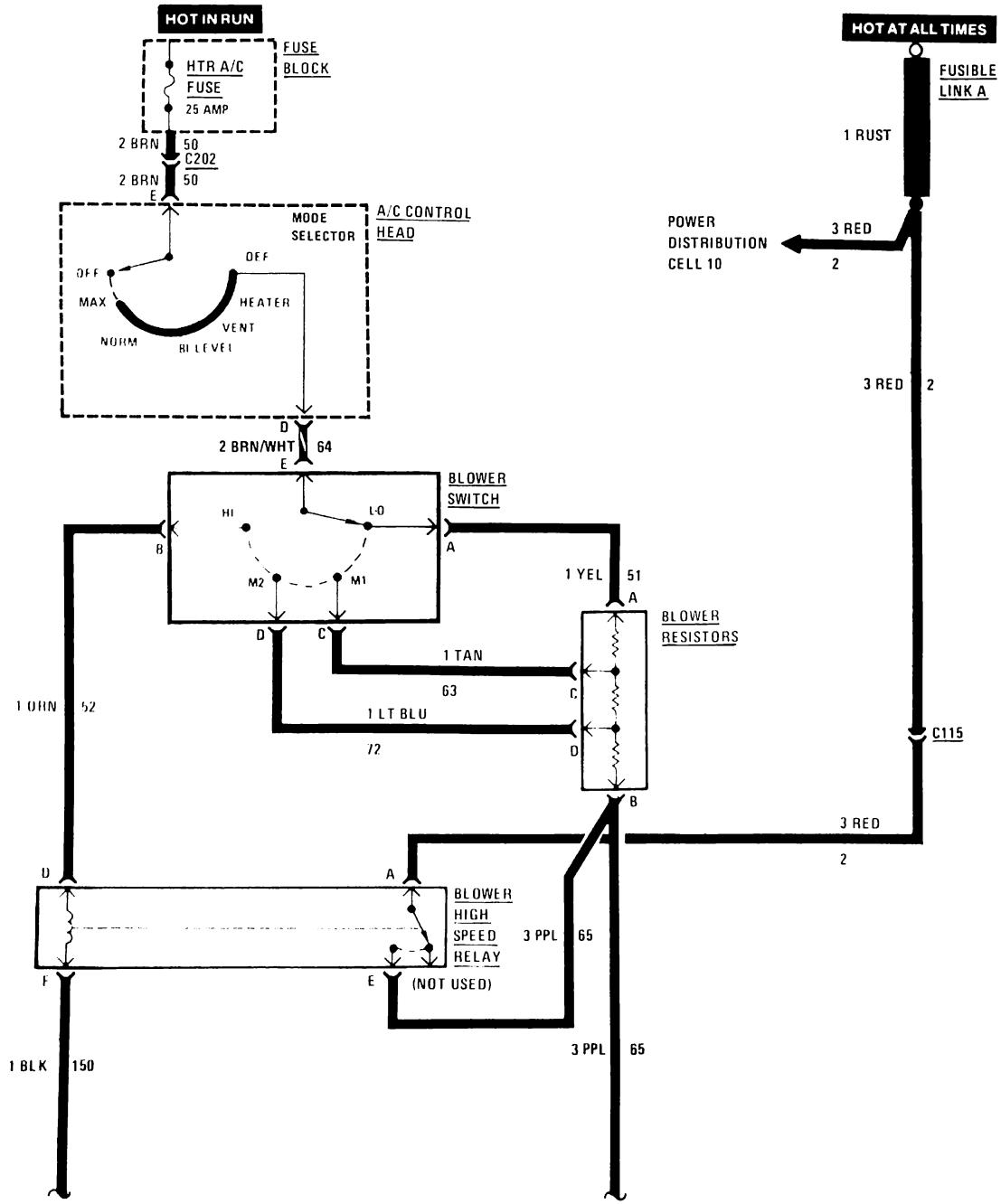

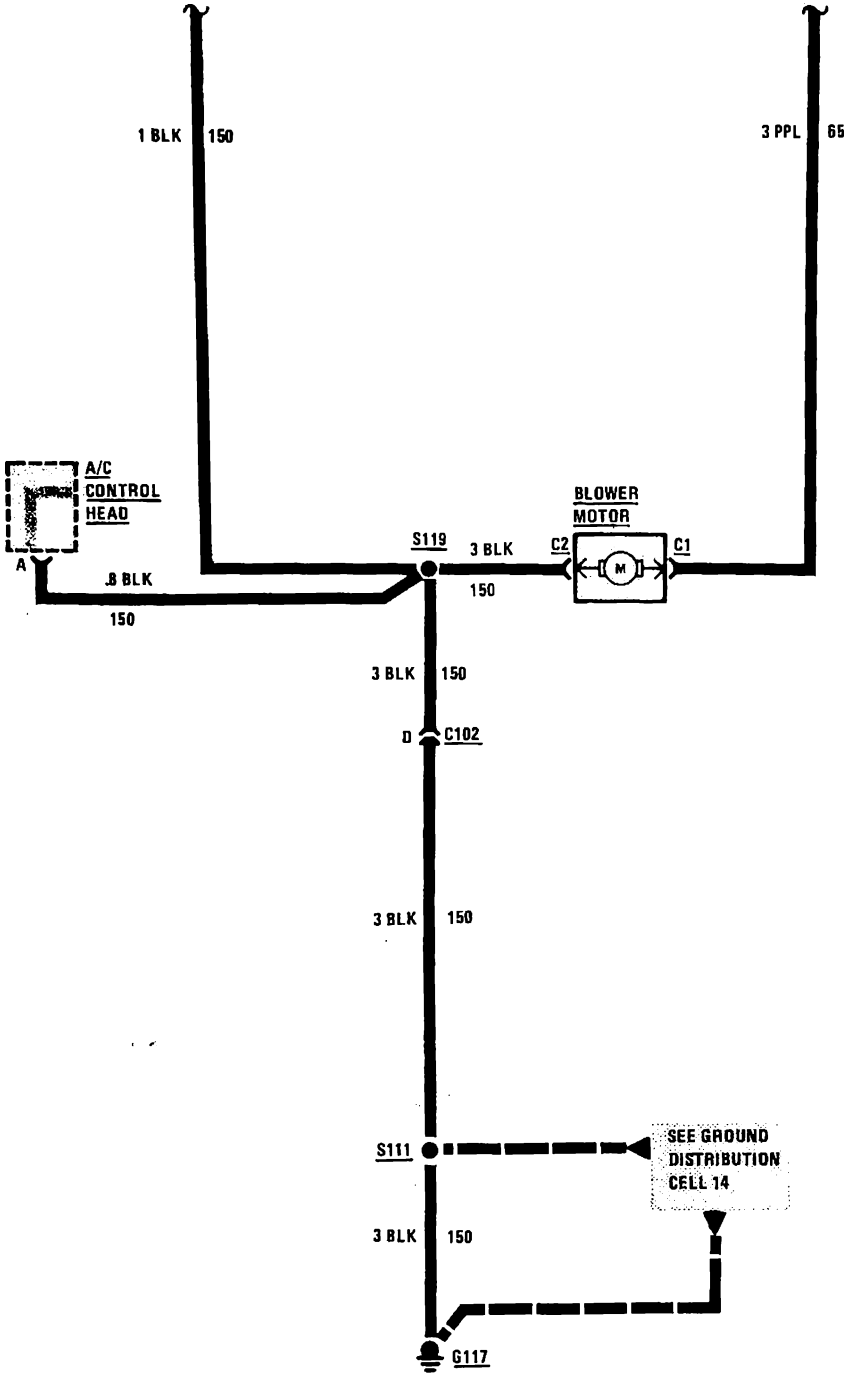
1 BLK
150
3 PPL
65
A/C
CONTROL
HEAD
A
.8 BLK
150
S119
3 BLK
150
BLOWER
MOTOR
C2
C1
M
3 BLK
150
D
C102
3 BLK
150
S111
SEE GROUND
DISTRIBUTION
CELL 14
3 BLK
150
G117

AIR CONDITIONING: COMPRESSOR CONTROLS

C60, MANUAL, V6 VIN 7

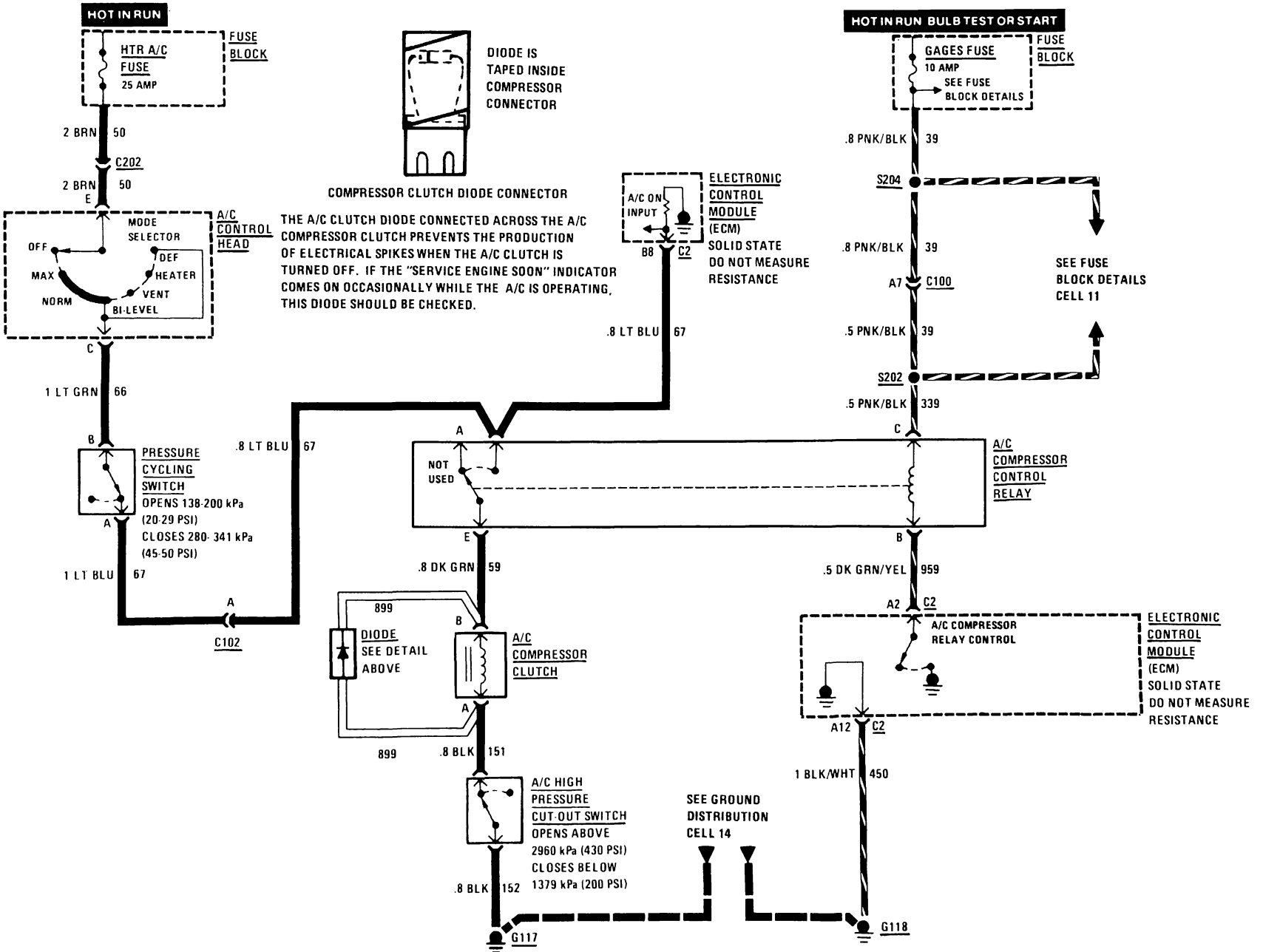

INSTRUMENT PANEL: GAGES CLUSTER
TURBO BOOST GAGE, TACHOMETER

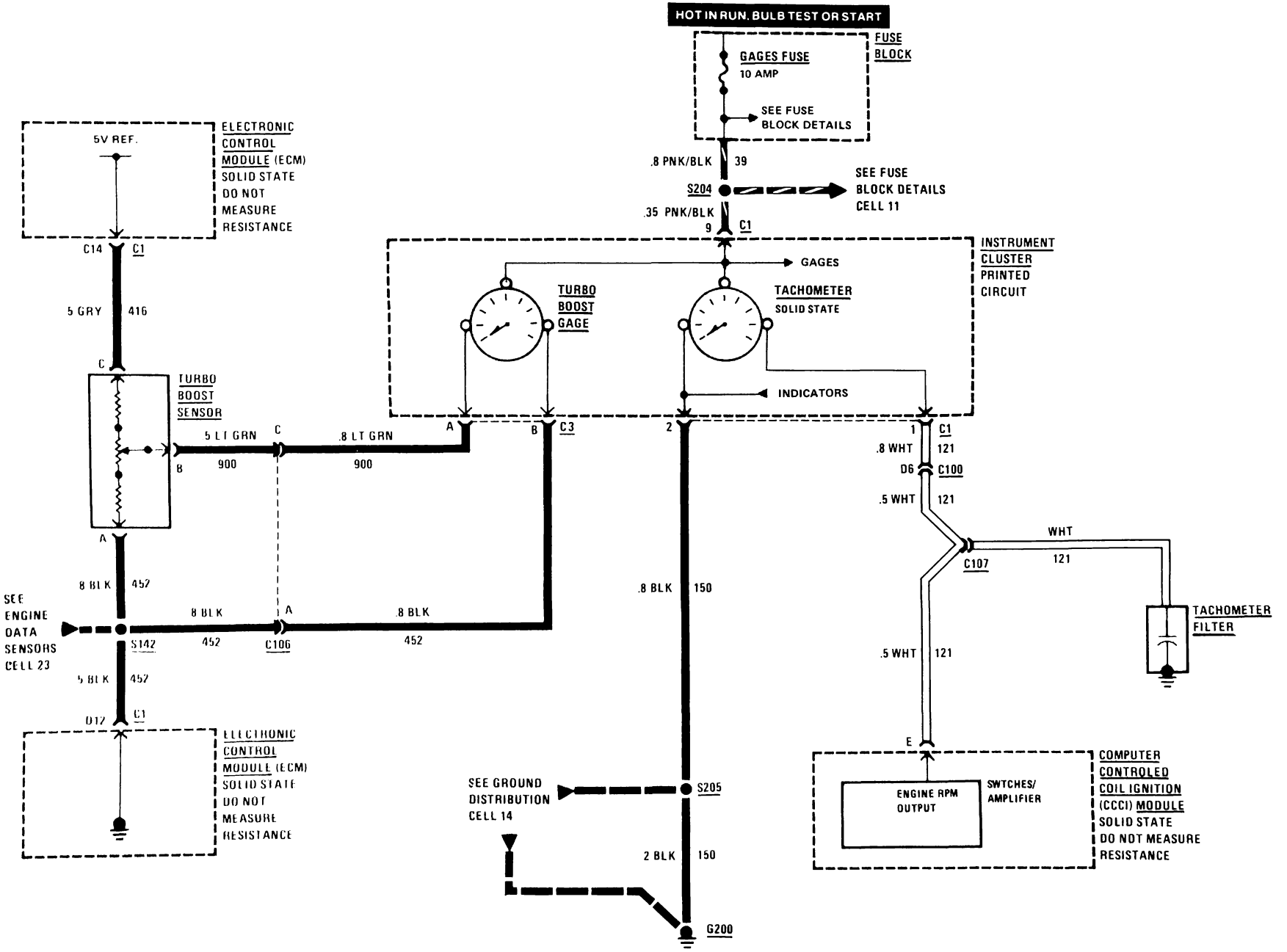

WIPER/WASHER: PULSE, CD4

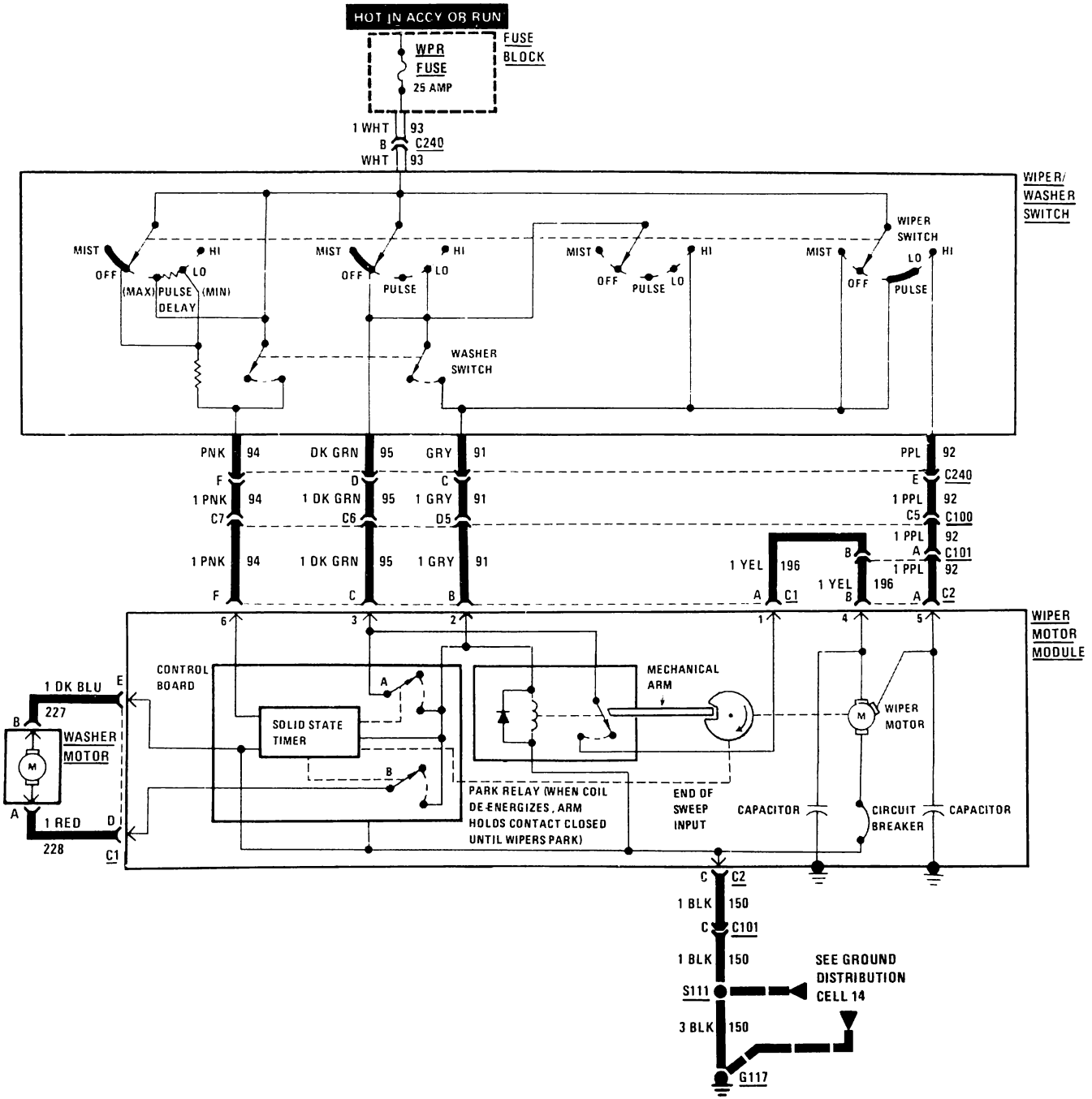

COMPONENT LOCATION

		Page-Figure
A/C Compressor Clutch	Lower LH front of engine	201-0-C
A/C Cut-Out Relay	LH rear corner of engine compartment, on relay bracket	201-2-A
A/C High Pressure Cut-Out Switch	LH front of engine, on rear of A/C compressor	201-0-B
Camshaft Sensor	Front center of engine	201-0-A
Computer Controlled Coil Ignition (CCCI) Module	Top rear center of engine	201-1-D
Coolant Fan Delay Relay	RH front corner of engine compartment, on radiator support	201-3-A
Coolant Fan Temperature Switch	Top front center of engine	201-0-A
Coolant Temperature Sender	Top front center of engine	201-0-A
Coolant Temperature Sensor (CTS)	LH front of engine	201-0-A
Crankshaft Sensor	Lower LH front of engine	201-1-A
Delay Relay Diode	RH front corner of engine compartment	201-3-A
Detonation Sensor	Rear center of engine	201-1-D
EGR Electronic Vacuum Regulator Valve (EVRV)	Top LH rear of engine	201-1-C
Electronic Spark Control (ESC) Module	LH rear corner of engine compartment, on relay bracket	201-2-A
Exhaust Gas Recirculation (EGR) Valve	Top LH side of engine	201-1-C
Fan A/C High Pressure Switch	RH side of engine compartment, near coolant reservoir	201-3-A
Fuel Pump/Oil Pressure Switch/ Sender	RH front of engine, below oil filter	201-2-B
Fuel Pump Relay	LH rear corner of engine compartment, on relay bracket	201-2-A
Fusible Link A	Lower RH side of engine, at Starter Solenoid Assembly	201-2-B
Fusible Link B	Lower RH side of engine, at Starter Solenoid Assembly	201-2-B
Fusible Link L	Lower RH side of engine, at Starter Solenoid Assembly	201-2-B
Fusible Link M	Lower RH side of engine, at Starter Solenoid Assembly	201-2-B
Fusible Link N	RH front corner of engine compartment	201-2-C

COMPONENT LOCATION

		Page-Figure
Generator	LH front corner of engine	201-0-B
High Speed Coolant Fan	RH rear of radiator	201-2-E
High Speed Coolant Fan Relay	RH front corner of engine compartment, next to battery	201-2-C
Idle Air Control Motor	Top front center of engine, below throttle assembly	201-2-D
Low Speed Coolant Fan	LH rear of radiator	201-2-E
Low Speed Coolant Fan Relay	RH front corner of engine compartment, on radiator support	201-3-A
Manifold Air Temperature (MAT) Sensor	Top rear of engine	
Mass Air Flow (MAF) Sensor	Top rear of engine	
Oxygen Sensor	Top front center of engine, below LH side of throttle assembly	201-0-A
Tachometer Filter	Center front of dash	
Throttle Position Sensor (TPS)	Top front center of engine, on RH side of throttle assembly	201-2-D
Transaxle Position Switch	Top of transaxle	
Turbo Boost Sensor	Center front of dash	
Vapor Canister Purge Solenoid	Rear of engine	
Vehicle Speed Sensor	LH rear of transmission	201-1-B
Waste Gate Solenoid	RH front of engine, on valve cover	201-2-D
C106 (3 cavities)	Behind RH side of I/P, near ECM	
C107 (1 cavity)	Center front of dash	
C109 (2 cavities)	RH front corner of engine compartment, rear of battery	201-3-A
C110 (8 cavities)	Behind center of engine	201-1-D
C143 (1 cavity)	Top front center of engine, below LH side of throttle assembly	201-0-A
G103	RH front corner of engine compartment	201-2-C
G104	RH front corner of engine compartment	201-2-C
G117	RH rear side of intake manifold	201-1-E
G118	RH rear side of intake manifold	201-1-E
S101	Engine harness, center rear of engine	201-1-D

COMPONENT LOCATION

		Page-Figure
S102	Engine harness, behind RH side of I/P	
S103	Injector harness, center rear of engine	201-1-D
S111	Engine harness, center rear of engine	201-1-D
S112	Engine harness, behind RH side of radiator	201-2-E
S114	Engine harness, LH rear corner of engine compartment	
S125	Engine harness, RH front corner of engine compartment	201-3-A
S142	Engine harness, LH rear corner of engine compartment	
S143	Engine harness, RH rear of engine	201-1-E
S145	Engine harness, LH rear corner of engine compartment	
S146	Engine harness, behind RH side of I/P	
S173	Engine harness, center rear of engine	201-1-D
S201	Engine harness, RH front corner of engine compartment	201-3-A
S202	Engine harness, RH rear of engine	201-1-E
S206	Engine harness, RH front corner of engine compartment	201-3-A
S208	Engine harness, RH side of engine compartment	

COMPONENT LOCATION VIEWS

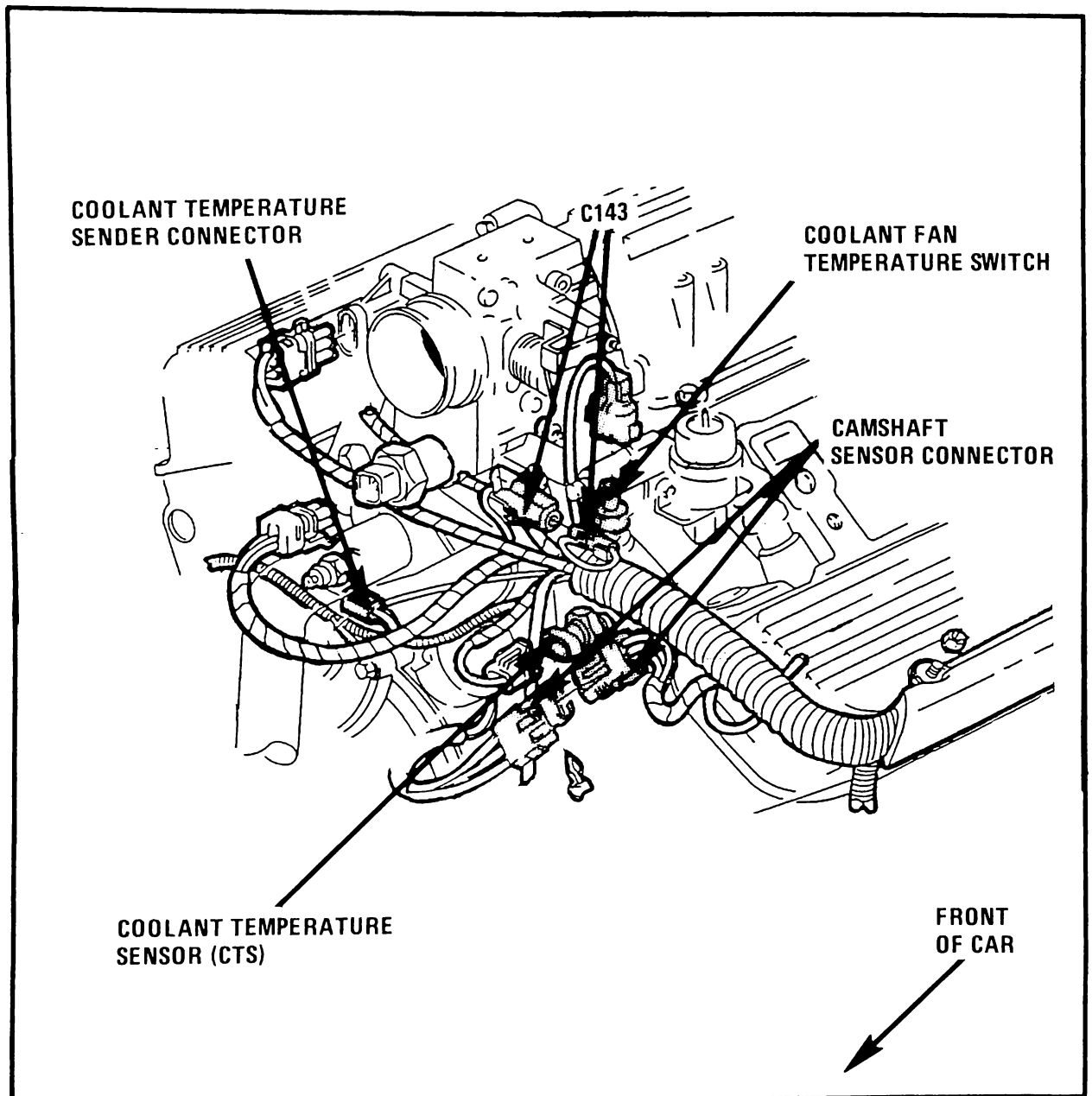

Figure A - Top Front Center Of Engine

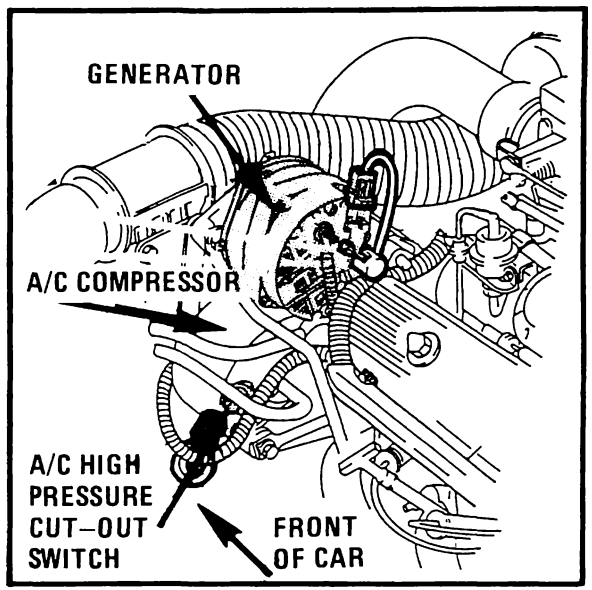

Figure B - Top LH Front Of Engine

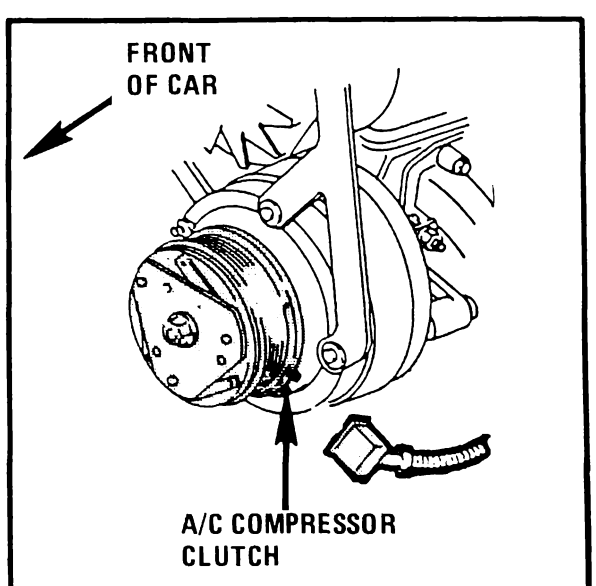

Figure C - Lower LH Front Of Engine

COMPONENT LOCATION VIEWS

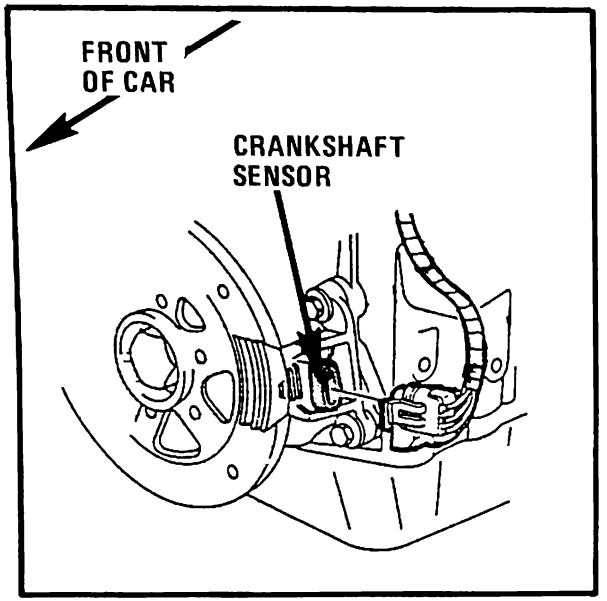

Figure A - Lower LH Front Of Engine

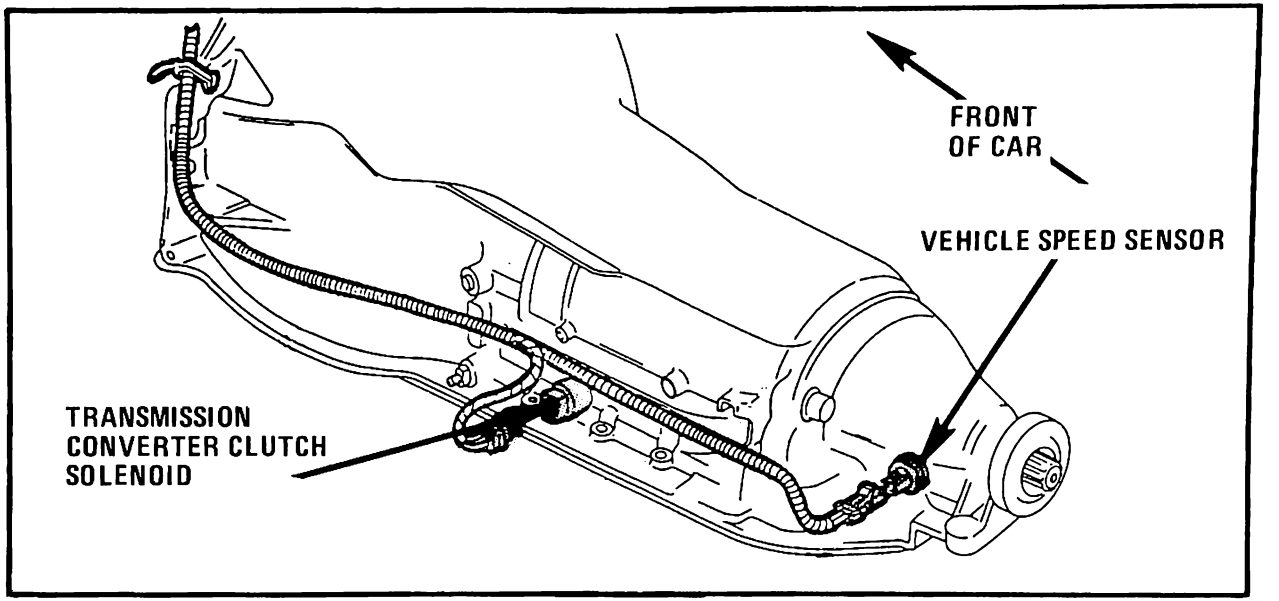

Figure B - LH Side Of Transmission

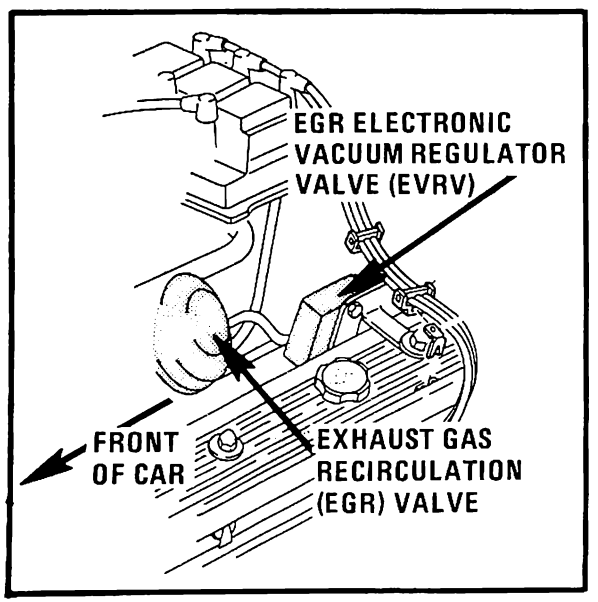

Figure C - Top LH Rear Of Engine

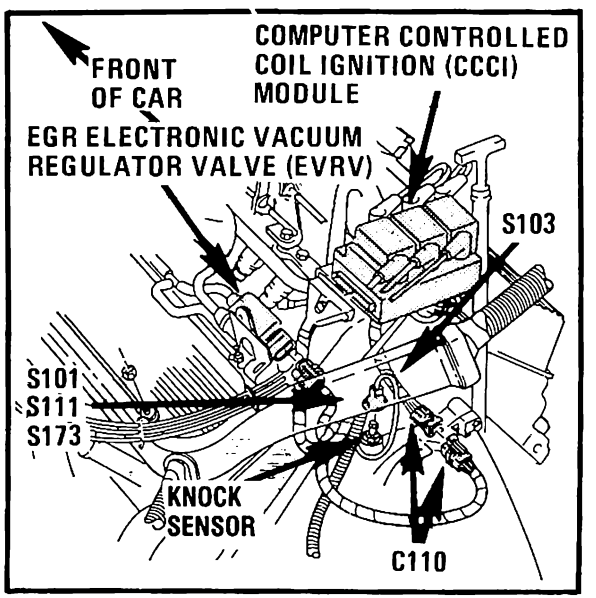

Figure D - Top Rear Of Engine

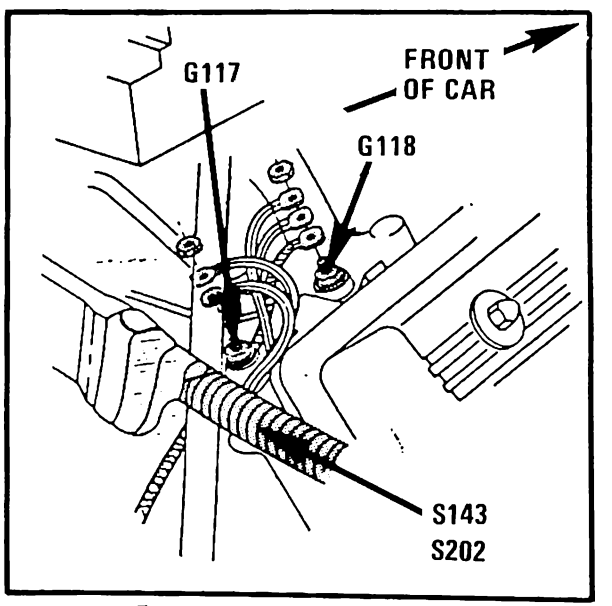

Figure E - Top Rear Of Engine

COMPONENT LOCATION VIEWS

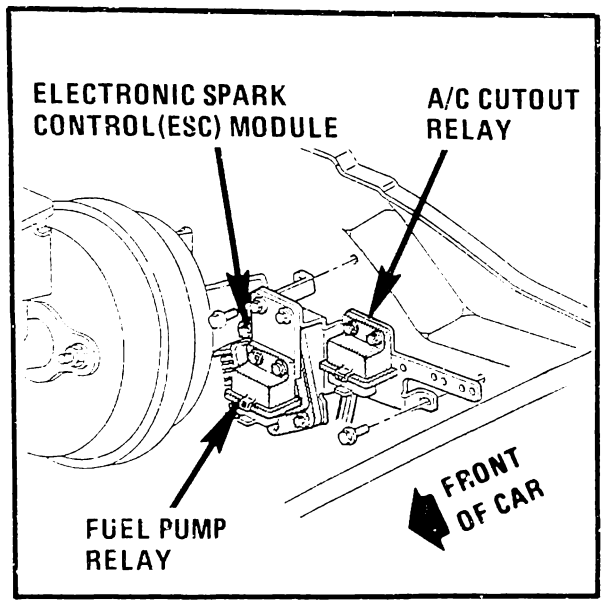

Figure A- LH Rear Corner Of Engine Compartment

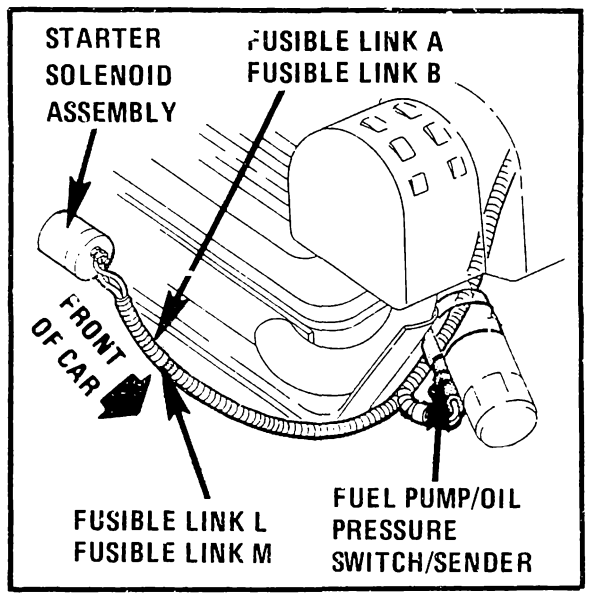

Figure B - Lower RH Front Of Engine

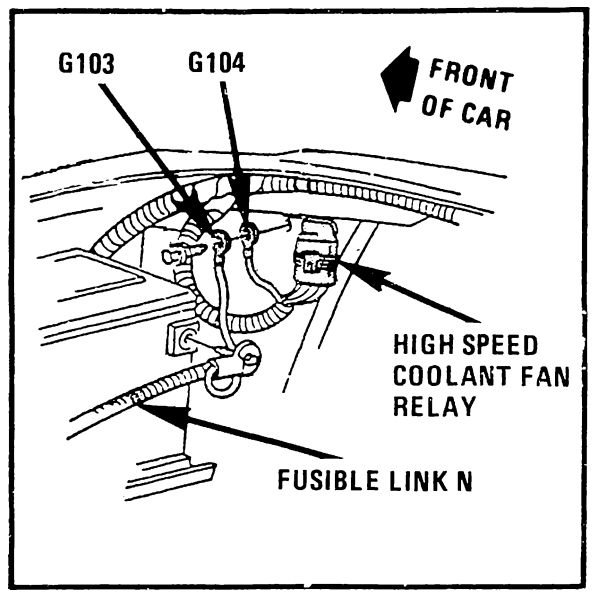

Figure C- RH Front Corner Of Engine Compartment

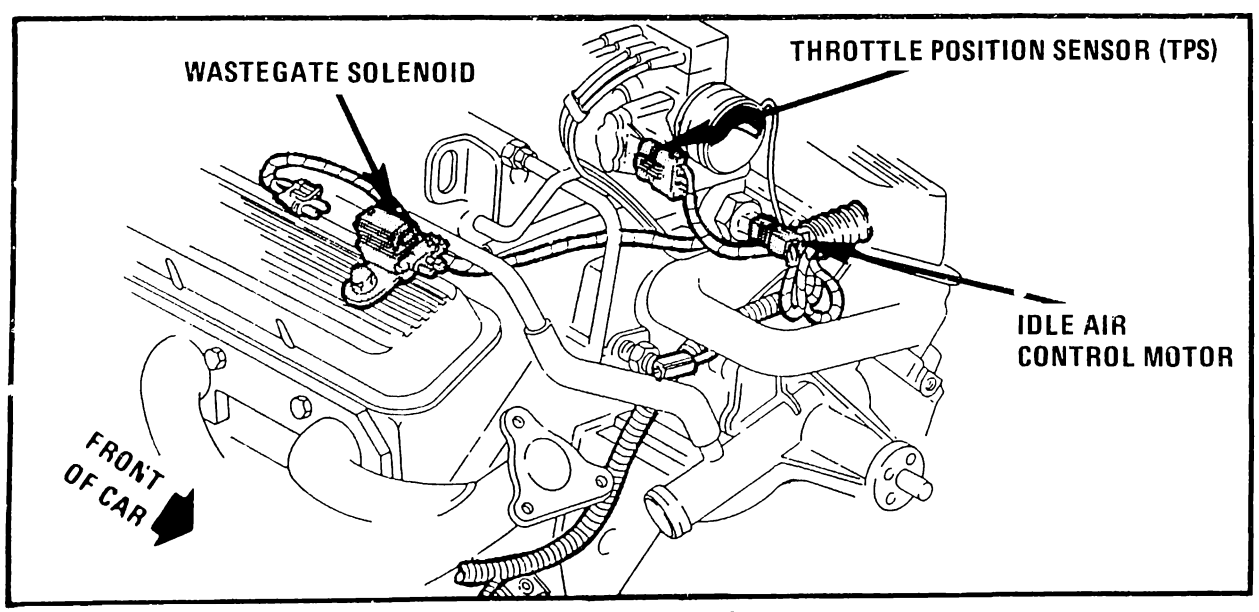

Figure D- Top RH Front Of Engine

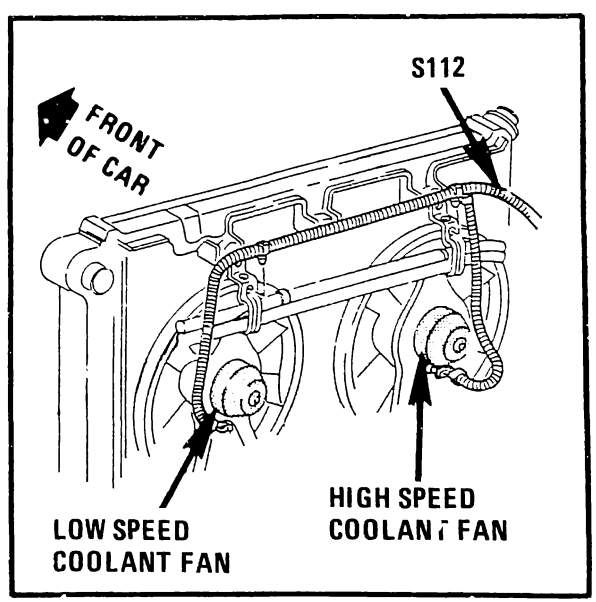

Figure E- Rear Of Radiator

COMPONENT LOCATION VIEWS

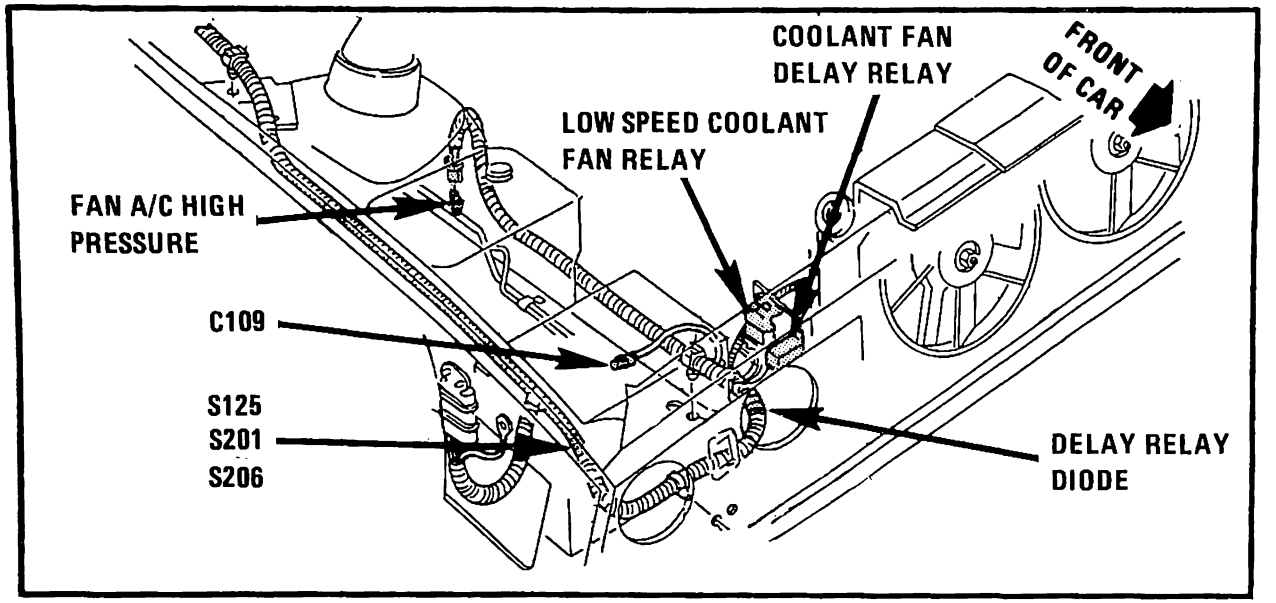

Figure A - RH Front Corner Of Engine Compartment

CONNECTOR FACE VIEWS

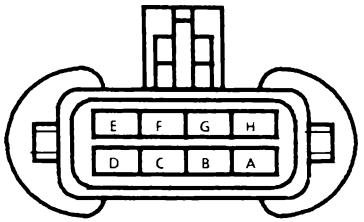

GRAY

C110

V080010

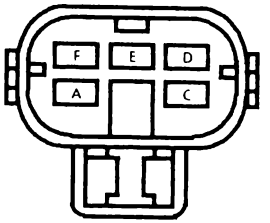

GRAY

HIGH SPEED COOLANT FAN RELAY

V004510

LOW SPEED COOLANT FAN RELAY, SEE HIGH SPEED COOLANT FAN RELAY

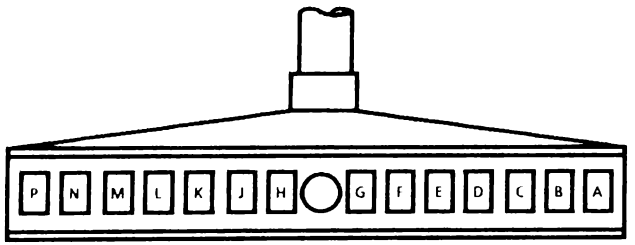

BLACK

COMPUTER CONTROLLED COIL IGNITION (CCCI) MODULE

V005430

IDLE AIR CONTROL MOTOR, SEE TRANSMISSION CONVERTER CLUTCH

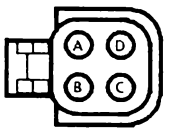

BLACK

TRANSMISSION CONVERTER CLUTCH

V000830

HARNESS ROUTING VIEWS

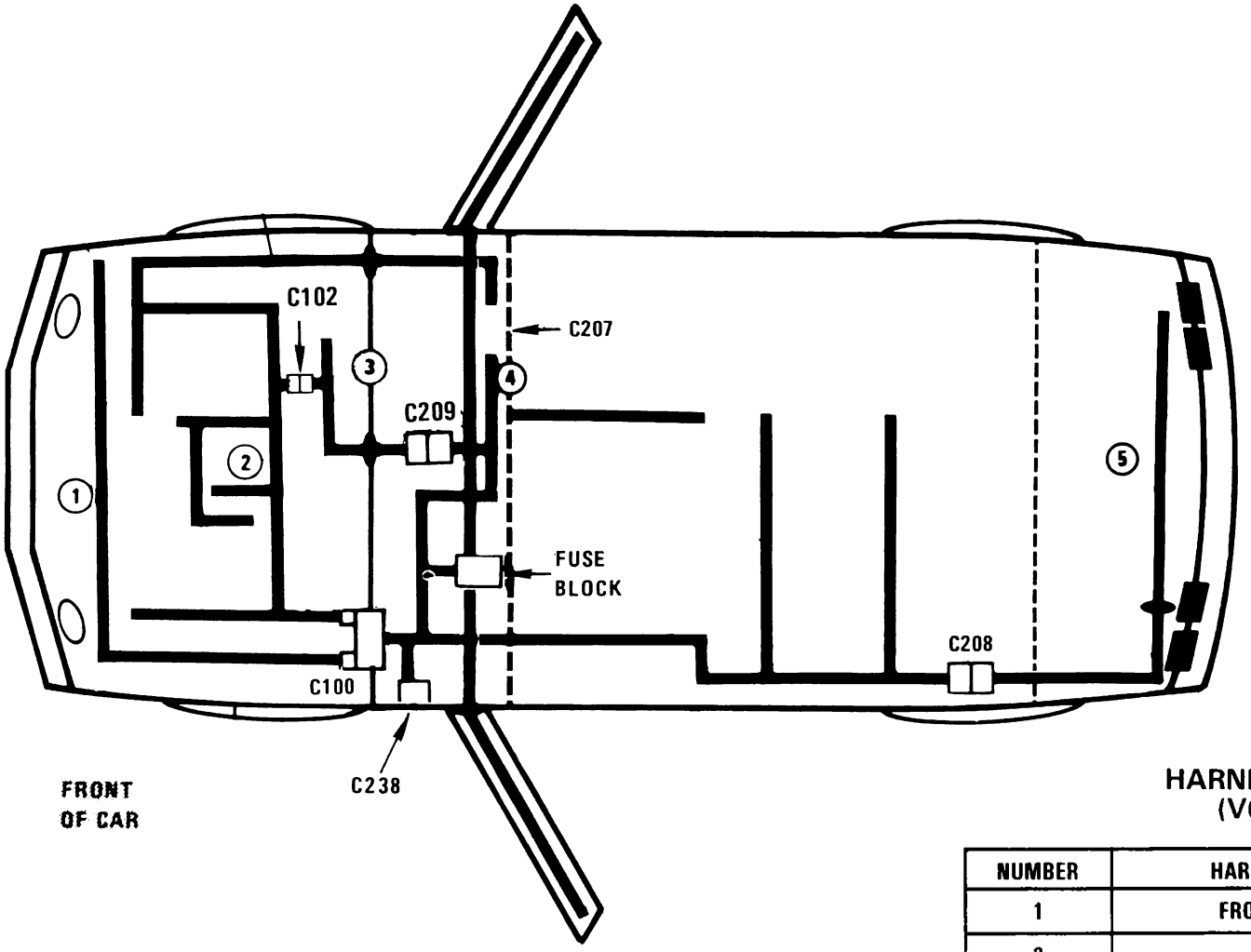

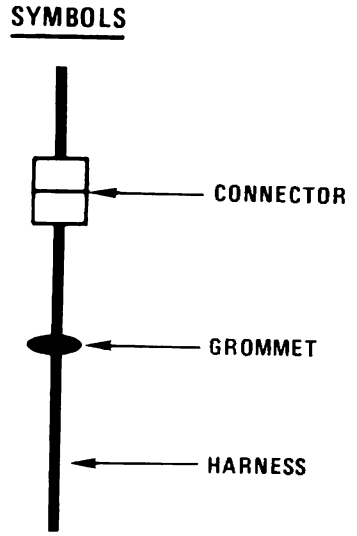

HARNESS CHART
(V6 VIN 7)

NUMBER	HARNESS NAME	PAGE-FIGURE
1	FRONT LIGHTS	*
2	ENGINE	201-0
3	AIR CONDITIONING	*
4	INSTRUMENT PANEL	*
5	REAR LIGHTS	*

* See the 1989 Pontiac Firebird Service Manual

SECTION 8C

INSTRUMENT PANEL, CLUSTER AND CONSOLE

CONTENTS

On-Vehicle Service 8C-1
Instrument Cluster 8C-1

ON-VEHICLE SERVICE

INSTRUMENT CLUSTER

Figure 1

The instrument panel cluster features a 140 mph speedometer and a tachometer with a boost gage. The instrument panel cluster gages cannot be serviced individually. A malfunctioning gage requires removal and servicing of the entire instrument cluster.

Service on instruments can be obtained through authorized repair stations. However, knowledge of instrument circuit checks will help in determining if operating difficulties lie in the instrument itself or in its allied circuit.

For information on removing the instrument cluster, refer to the 1989 Firebird Service Manual.

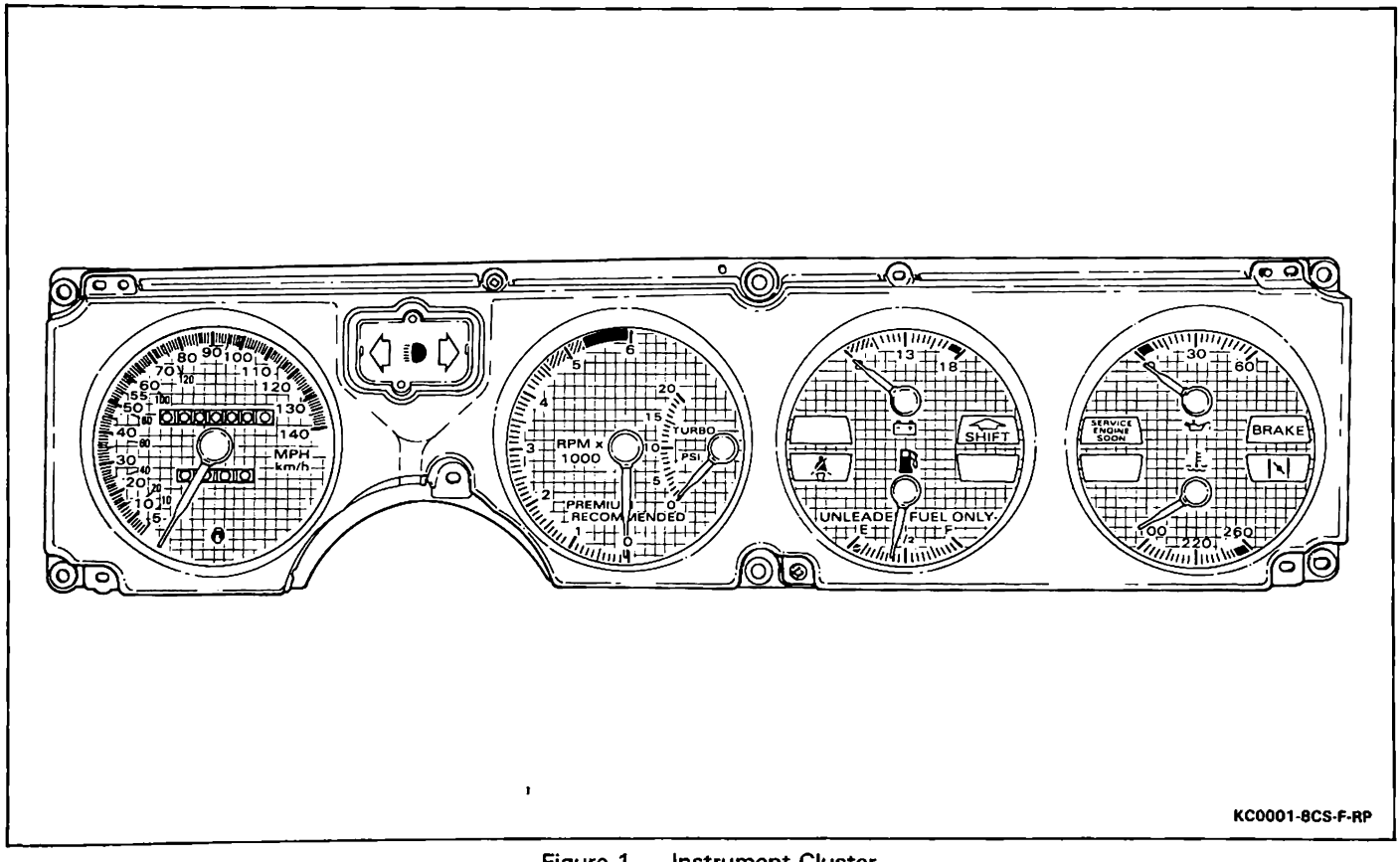

Figure 1 — Instrument Cluster

SECTION 9B

CRUISE CONTROL

The following "Notice" applies to one or more steps in the assembly procedure of components in this portion of the manual as indicated at appropriate locations by the terminology "NOTICE: See "Notice" on page 9B-1 of this section."

NOTICE: When fasteners are removed, always reinstall them at the same location from which they were removed. If a fastener needs to be replaced, use the correct part number fastener for that application. If the correct part number fastener is not available, a fastener of equal size and strength (or stronger) may be used. Fasteners that are not reused, and those requiring thread locking compound will be called out. The correct torque value must be used when installing fasteners that require it. If the above conditions are not followed, parts or system damage could result.

CONTENTS

On-Vehicle Service 9B-1
Servo Unit 9B-1
Specifications 9B-2

ON-VEHICLE SERVICE

SERVO UNIT

Figure 1

Remove or Disconnect

1. Turbocharger air inlet pipe at air cleaner elbow.
2. Electrical connector and vacuum hoses.
   - Note the positions of the vacuum hoses.
3. Retainer (6).
4. Throttle actuating cable (3) from servo (7).
5. Screws (9).
6. Servo (7).

Install or Connect

1. Vacuum hoses to positions from which they were removed.
2. Cable (3) to servo (7).
3. Retainer (6).

NOTICE: See "Notice" on page 9B-1 of this section.

4. Screws (9) through bracket to servo (7).

Tighten

- Screws (9) to 1.6 N·m (14 lb. in.).

5. Electrical connector.

Adjust

- Cable (3) for minimum slack.
  - Remove the retainer (6) and disconnect the cable (3) at the servo (7).
  - With the cable (3) installed at the engine, pull the servo end of the cable (3) toward the servo (7) without moving the lever (2).
  - If one of the holes in the servo tab aligns with the cable pin, insert the pin and install the retainer (6).

NOTICE: Do not stretch the cable to make the pin fit into a hole or the engine will not return to idle.

  - If a tab hole does not line up with the pin, move the cable (3) away from the servo (7) to the next closest hole. Insert the pin and install the retainer (6).

6. Turbocharger air inlet pipe at air cleaner elbow.

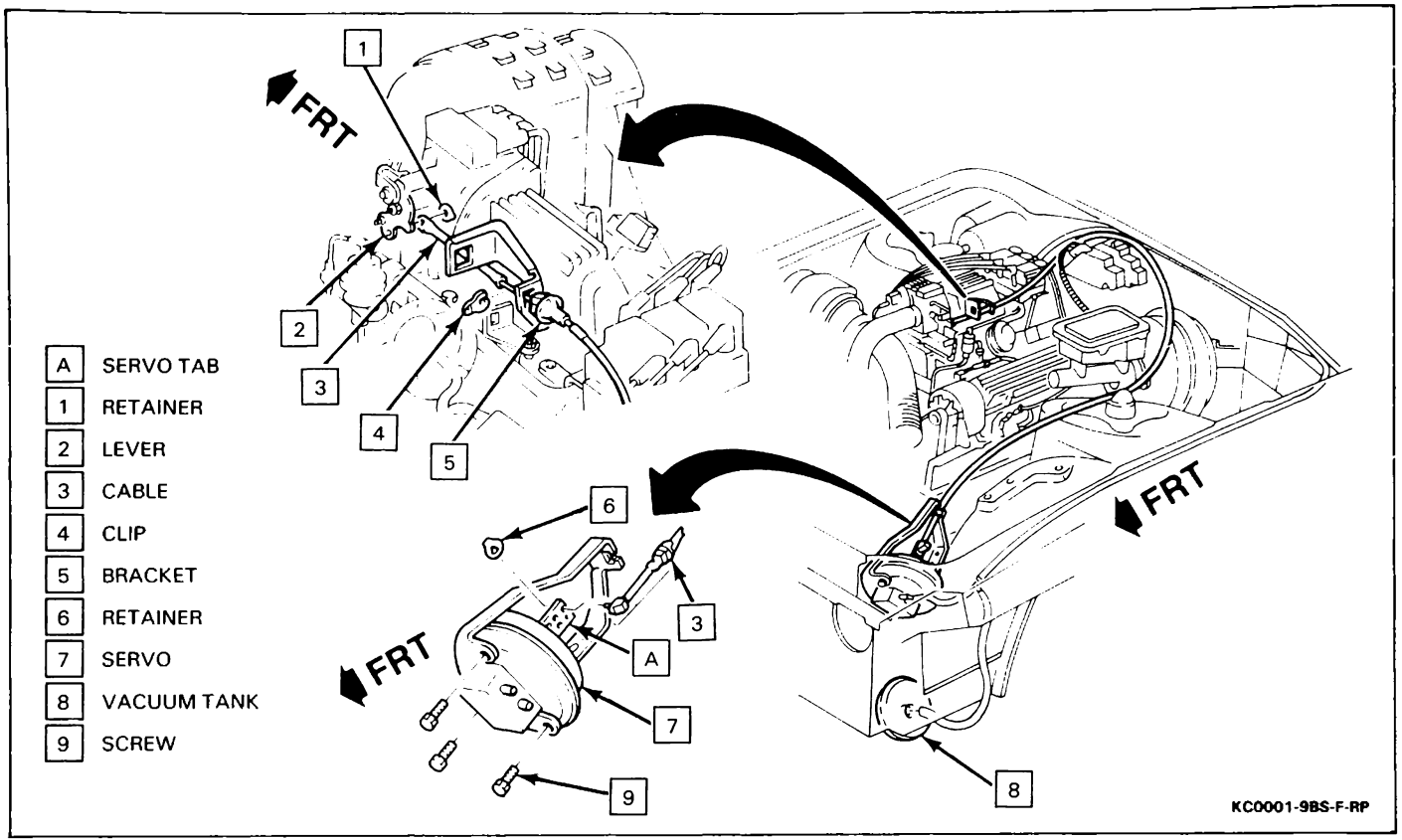

Figure 1 — Servo Mounting

SPECIFICATIONS

FASTENER TORQUE SPECIFICATIONS

Servo-to-Mounting Bracket Screw ..... 1.6 N·m (14 lb. in.)

SECTION 10-1

GENERAL BODY SERVICE PROCEDURES

CONTENTS

Adhesive Emblems 10-1-1
Door Handle Tape Insert 10-1-1
Front Fascia Emblem 10-1-2

ADHESIVE EMBLEMS

Figure 1

Replace adhesive emblems or repair emblems with loose ends as described in the 1989 Firebird Service Manual.

DOOR HANDLE TAPE INSERT

Figure 1

Remove or Disconnect

- Tape insert (6).
  - Hold a hot air gun 152 mm (6 inches) from the surface of the tape insert (6).
  - Apply heat with a circular motion for about 30 seconds.
  - Peel the tape insert (6) from the door handle.
  - Discard the tape insert (6).

Install or Connect

- Tape insert (6).
  - Clean door handle with soap and water and wipe dry.
  - Wipe door handle with oil-free naphtha or alcohol.
  - Warm door handle to 21°C (70°F) if necessary.
  - Peel backing from front end of tape insert (6).
    - Do not touch adhesive side of the tape insert (6).
  - Press the tape insert (6) to the door handle.

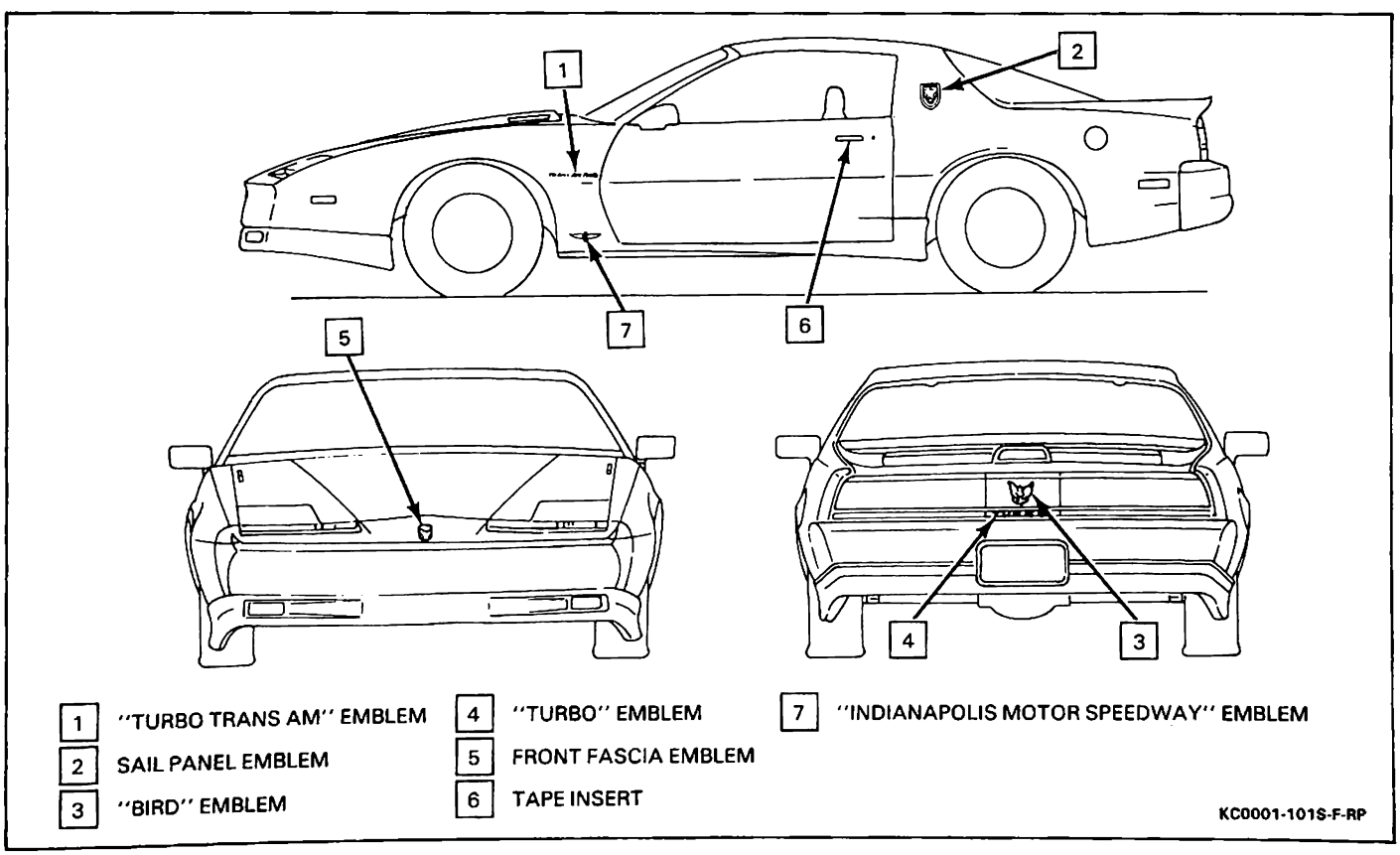

Figure 1 — Emblems

FRONT FASCIA EMBLEM

Figure 1

Remove or Disconnect

1. Filler panel screws.
2. Filler panel.
3. Nut holding front fascia emblem (5) to the vehicle
4. Front fascia emblem (5).

Install or Connect

1. Front fascia emblem (5).
2. Nut to front fascia emblem (5).
3. Filler panel.
4. Filler panel screws.

SECTION 10-9

SEATS

The following "Notice" applies to one or more steps in the assembly procedure of components in this portion of the manual as indicated at appropriate locations by the terminology "NOTICE: See "Notice" on page 10-9-1 of this section."

NOTICE: When fasteners are removed, always reinstall them at the same location from which they were removed. If a fastener needs to be replaced, use the correct part number fastener for that application. If the correct part number fastener is not available, a fastener of equal size and strength (or stronger) may be used. Fasteners that are not reused, and those requiring thread locking compound will be called out. The correct torque value must be used when installing fasteners that require it. If the above conditions are not followed, parts or system damage could result.

CONTENTS

Rear Seatback 10-9-1
Shoulder Strap Guide 10-9-2
Specifications 10-9-2

REAR SEATBACK

Figure 1

Remove or Disconnect

1. Seat cushion as described in the 1989 Firebird Service Manual.
2. Shoulder strap guide. Refer to "Shoulder Strap Guide" in this section.
3. Seatback lock (2) from striker (1).
4. Nuts (4) from seat studs.
5. Seat studs from outer pivot supports by lifting upward on the outboard side of the seatback (3).

- Slide the inner pivot support off of the floor stud.

NOTICE: Failure to place a protective shield over nearby trim and paint may cause damage to the vehicle.

- Place a protective shield over nearby trim and paint.

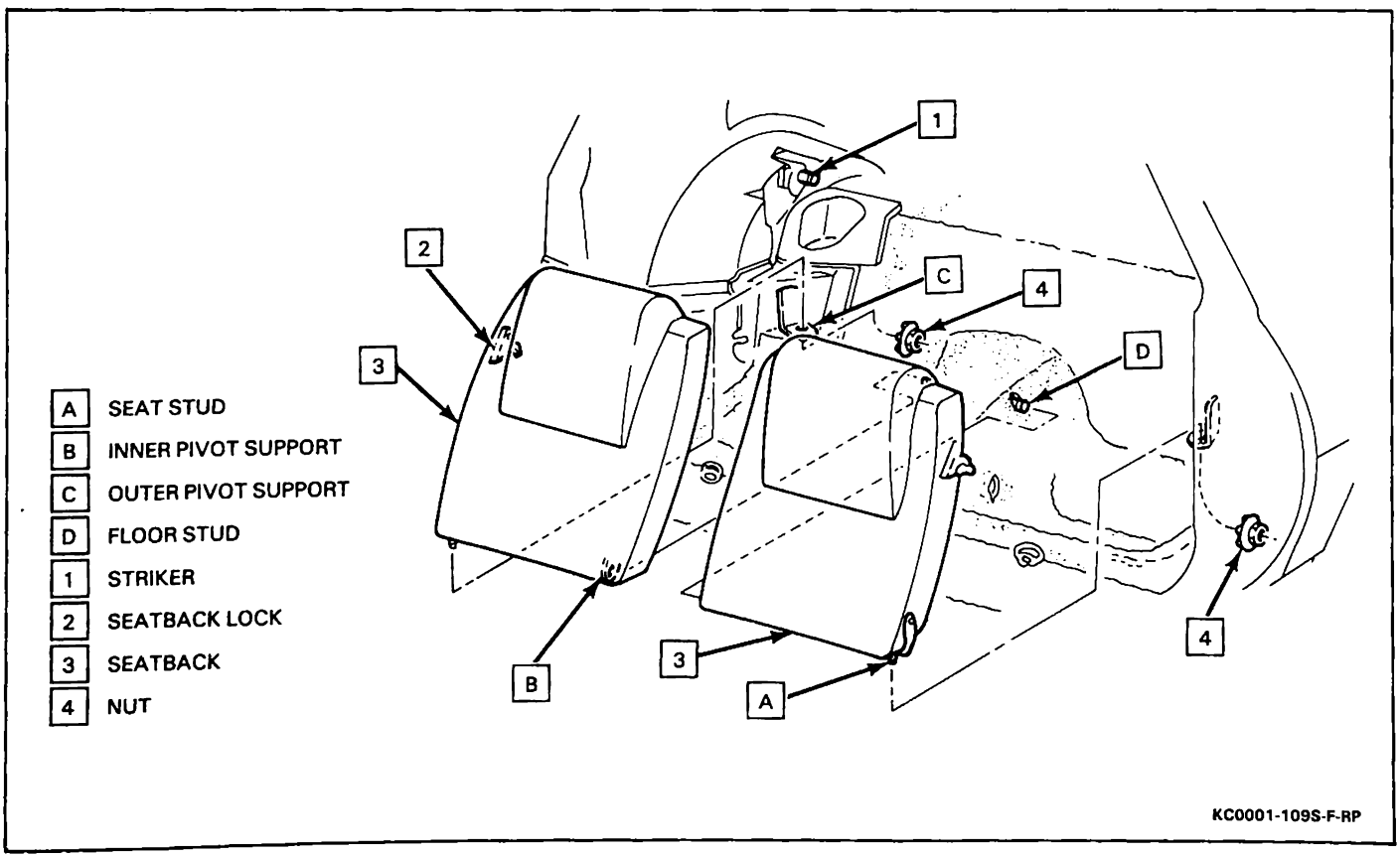

Figure 1 — Rear Seatback

6. Seatback (3) from vehicle through the rear compartment lift window.
7. Protective shield.

Install or Connect

NOTICE: Failure to place a protective shield over nearby trim and paint may cause damage to the vehicle.

1. Protective shield over nearby trim and paint.
2. Seatback (3) into vehicle through the rear compartment lift window.
- Remove protective shield.
- Slide the inner pivot support onto the floor stud.
3. Seat studs into outer pivot supports.
4. Nuts (4) to seat studs loosely.

NOTICE: See "Notice" on page 10-9-1 of this section.

5. Seatback lock (2) to striker (1).

Tighten

- Nuts (4) to 13 N·m (115 lb. in.).

6. Seat cushion as described in the 1989 Firebird Service Manual.
7. Shoulder strap guide. Refer to "Shoulder Strap Guide" in this section.

SHOULDER STRAP GUIDE

Figure 2

Remove or Disconnect

1. Bolts (6).
2. Shoulder strap guide (5).

Install or Connect

1. Shoulder strap guide (5).

NOTICE: See "Notice" on page 10-9-1 of this section.

2. Bolts (6).

Tighten

- Bolts (6) to 16 N·m (12 lb. ft.).

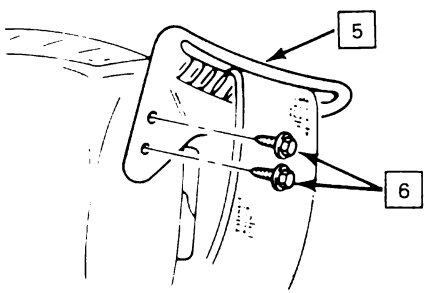

5 SHOULDER STRAP GUIDE
6 BOLT

KC0002-109S-F-RP

Figure 2 — Rear Seat Shoulder Strap Guide

SPECIFICATIONS

FASTENER TORQUE SPECIFICATIONS

Rear Seatback Stud-to-Outer Pivot Support Nut	13 N·m (115 lb. in.)
Shoulder Strap Guide Bolt	16 N·m (12 lb. ft.)

A

Accumulator Assembly, Transmission 7A-8
Accumulator Piston Assemblies,
Transmission, 1-2 and 3-4 . . . . . .200-4R-4
Accumulator, Transmission, 3-4 . . . . . .200-4R-45
Actuator, Turbocharger, Wastegate 6J-9
Adapter, Engine, Oil Cooler and 6A5-21
Adapter, Exhaust System 6F-3
Adhesive Emblems. 10-1-1
Air Conditioning and Generator
Bracket Replacement. 6D3-2
Air Conditioning, Manually Controlled. 1B-1
Air Leak Check, Turbocharger, Noise and 6J-3
Application Chart, Auto Trans
Diagnosis, Clutch 200-4R-5
Arm, Rear Suspension, Torque. 3D-1
Automatic Transmission Diagnosis 200-4R-1
Automatic Transmission Unit Repair 200-4R-1

B

Balancer, Engine, Crankshaft. 6A5-16
Bearing Lower Oil Seal, Engine,
Rear Main 6A5-31
Bearing Upper Oil Seal, Engine,
Rear Main 6A5-31
Belt Tensioner, Drive 6B-4
Belt Tensions 0B-1
Belt, Serpentine Drive 6B-3
Block, Engine, Cylinder 6A5-29
Bracket Replacement,
Air Conditioning and Generator. 6D3-2
Bracket, Generator, Compressor and
Power Steering Pump 1B-5, 3B1-4

C

Cable, Transmission, TV 7A-4
Camshaft, Engine 6A5-18
Capacities, Component 0B-1
Capacities, Cooling System 0B-1
Carrier Assembly, Transmission, Front. 200-4R-22
Carrier Removal, Transmission, Rear 200-4R-12
Catalytic Converter 6F-3
Center Support, Transmission. 200-4R-29
Chain and Sprockets, Engine, Timing 6A5-18
Changing Fluid and Filter, Transmission 7A-4
Charging System 6D3-1
Check Valve Removal, Transmission,
Third Accumulator 200-4R-7
Clearance, Exhaust-to-Body. 6F-4
Cluster, Instrument. 8C-1
Clutch Application Chart, Auto
Trans Diagnosis 200-4R-5
Clutch Assembly, Transmission, Direct 200-4R-23
Clutch Assembly, Transmission, Forward 200-4R-26
Clutch Assembly, Transmission, Fourth. 200-4R-8
Clutch Diagnosis, Automatic Transmission,
Torque Converter 200-4R-51
Clutch Housing, Transmission, Lo and Reverse .200-4R-18
Clutch Shaft End Play Check,
Transmission, Forward 200-4R-9, 200-4R-30
Complete Exhaust System 6F-4
Component Capacities 0B-1
Components, Transmission, Serviceable 7A-6
Compressor 1B-4
Compressor and Power Steering Pump
Bracket, Generator 1B-5, 3B1-4
Connecting Rod and Main Bearings, Engine. 6A5-27
Connecting Rod Assembly, Engine, Piston and . . .6A5-23
Construction, Engine 6A5-1
Control Valve Assembly, TC Series
Power Steering Pump. 3B1-4
Control Valve Assembly, Transmission. .7A-9, 200-4R-44
Controls, Transmission, Torque Converter
Clutch Electrical 7A-2
Converter Clutch Diagnosis, Transmission,
Torque 7A-4
Converter Clutch Electrical Controls,
Transmission, Torque 7A-2
Converter Vibration Test Procedure,
Transmission, Flywheel/Torque 7A-1
Converter, Catalytic 6F-3
Coolant Pump. 6B-3
Coolant Pump Pulley 6B-1
Cooler and Adapter, Engine, Oil 6A5-21
Cooling and Radiator 6B-1
Cooling System Capacities 0B-1
Coupling, Exhaust Flex 6F-1
Cover and Gears, Engine, Oil Pump. 6A5-22
Cover Oil Seal, Engine, Front 6A5-17
Cover, Engine, Front 6A5-16
Covers, Engine, Valve Rocker 6A5-7
Cranking System 6D2-1
Crankshaft Balancer, Engine 6A5-16
Crankshaft, Engine 6A5-26
Crossmember, Transmission 7A-13
Crossover Pipe 6F-2
Cruise Control 9B-1
CS-144 Generator 6D3-2
Cylinder Block, Engine. 6A5-29
Cylinder Head, Engine 6A5-11

D

Diagnosis Charts, Automatic Transmission 200-4R-6
Diagnosis, Automatic Transmission. 200-4R-1
Diagnosis, Automatic Transmission,
Torque Converter Clutch 200-4R-51
Diagnosis, Engine, Valve Lifter. 6A5-9
Diagnosis, Transmission, Fluid Leak 7A-2
Diagnosis, Transmission, Torque
Converter Clutch. 7A-4
Diagnosis, Turbocharger 6J-3
Diagrams, Auto Trans Diagnosis,
Electrical Wiring 200-4R-46
Diagrams, Auto Trans Diagnosis,
Fluid Flow 200-4R-19
Direct Clutch Assembly, Transmission. 200-4R-23
Direct Clutch Disassembly, Transmission,
Forward and. 200-4R-9
Direct Clutch, Transmission, Forward and 200-4R-29
Door Handle Tape Insert 10-1-1
Drive Belt, Serpentine 6B-3
Drive Belt Tensioner 6B-4
Driveability and Emissions -
Fuel Injection (Port) 6E3-1

Driveability and Emissions - General Information 6E-1
Driveshaft Assembly and Seal, TC Series Power Steering Pump 3B1-5
Duct, Turbocharger, Intercooler 6J-10

E

EGR System Service 0B-1
Electrical Diagnosis 8A-1
Electrical Wiring Diagrams, Auto Trans Diagnosis 200-4R-46
Emblem, Front Fascia 10-1-2
Emblems, Adhesive 10-1-1
Engine Assembly 6A5-3
Engine Construction 6A5-1
Engine Identification 6A5-1
Engine Mounts 6A5-33
Engine Oil and Viscosity 0B-1
Engine Wiring 6D5-1
Engine, 3.8L V6 . . . . . .6A5-1
Evaluation, Auto Trans Diagnosis, Torque Converter 200-4R-51
Exhaust Flex Coupling 6F-1
Exhaust Manifold, Engine 6A5-6
Exhaust Pipe 6F-1
Exhaust System 6F-1
Exhaust System, Complete 6F-4
Exhaust-to-Body Clearance 6F-4
Explanation of Scheduled Maintenance Services 0B-1
Extension, Tailpipe 6F-4
External Parts, Transmission 200-4R-42

F

Fascia Emblem, Front 10-1-2
Filler Tube, Transmission 7A-8
Filter, Transmission, Changing Fluid and 7A-4
Fitting, Engine, Piston 6A5-25
Fitting, Power Steering Hose 3B1-3
Fluid and Filter, Transmission, Changing 7A-4
Fluid Flow Diagrams, Auto Trans Diagnosis 200-4R-19
Fluid Leak Diagnosis, Transmission 7A-2
Fluid Passages, Auto Trans Diagnosis 200-4R-47
Fluid Pressure Check Procedure, Auto Trans Diagnosis 200-4R-3
Flushing Procedure, Transmission, Oil Cooler 7A-4
Flywheel, Engine 6A5-32
Flywheel/Torque Converter Vibration Test Procedure, Transmission 7A-1
Forward and Direct Clutch Disassembly, Transmission 200-4R-9
Forward and Direct Clutch, Transmission 200-4R-29
Forward Clutch Assembly, Transmission 200-4R-26
Forward Clutch Shaft End Play Check, Transmission 200-4R-9, 200-4R-30
Fourth Clutch Assembly, Transmission 200-4R-8
Front Carrier Assembly, Transmission 200-4R-22
Front Cover Oil Seal, Engine 6A5-17
Front Cover, Engine 6A5-16
Front Fascia Emblem 10-1-2
Front Gear Components, Transmission 200-4R-21
Front Internal Gear to Output Shaft End Play Check, Transmission . . .200-4R-9, 200-4R-23
Front Suspension 3C-1

G

Gear Components, Transmission, Front 200-4R-21
Gear to Output Shaft End Play Check, Transmission, Front Internal 200-4R-9, 200-4R-23
Gear, Transmission, Speedometer Driven 7A-7
Gears, Engine, Oil Pump Cover and 6A5-22
General Body Service Procedures 10-1
General Information 0A-1
General Service Procedures, Transmission 7A-1
Generator, CS-144 . . . . . .6D3-2
Generator Bracket Replacement, Air Conditioning and 6D3-2
Generator Replacement 6D3-1
Generator, Compressor and Power Steering Pump Bracket 1B-5, 3B1-4
Governor Assembly Removal, Transmission 200-4R-4
Governor Assembly, Transmission 200-4R-42
Governor, Transmission 7A-7
Guide, Shoulder Strap 10-9-2

H

Handle Tape Insert, Door 10-1-1
Head, Engine, Cylinder 6A5-11
Heater Hoses and Pipes 1B-1
Hose Fitting, Power Steering 3B1-3
Hose Replacement, Power Steering 3B1-1
Hose, Power Steering, Pressure 3B1-1
Hose, Power Steering, Reservoir-to-Pump 3B1-2
Hose, Power Steering, Return 3B1-1
Hose, Refrigerant 1B-3
Hoses and Pipes, Heater 1B-1

I

Identification Number, Vehicle 0A-1
Identification, Engine 6A5-1
Identification, Transmission 0A-1, 7A-1
Ignition System 6D4-1
Inspection Procedure, Turbocharger Internal 6J-12
Inspection, Turbocharger 6J-3
Instrument Cluster 8C-1
Instrument Panel, Cluster and Console 8C-1
Intake Manifold, Engine 6A5-4
Intercooler Duct, Turbocharger 6J-10
Intercooler, Turbocharger 6J-2, 6J-10
Intermediate Servo Assembly Removal, Transmission 200-4R-1
Internal Gear, Transmission, Overdrive 200-4R-31
Internal Gear, Transmission, Rear Carrier and 200-4R-15

L

Leak Diagnosis, Transmission, Fluid 7A-2
Length Check, Transmission, Servo Pin 200-4R-4
Lifter Diagnosis, Engine, Valve 6A5-9
Lifter Replacement, Engine, Valve 6A5-10
Lifters, Engine, Valve 6A5-9
Lo and Reverse Clutch Housing, Transmission 200-4R-18
Lubrication, Maintenance and 0B-1
Lubrication System, Engine 6A5-2

M

Main Bearings, Engine, Connecting Rod and 6A5-27
Maintenance and Lubrication 0B-1
Maintenance Items 0B-1
Maintenance Service, Scheduled 0B-1
Maintenance, Turbocharger 6J-2
Manifold, Engine, Exhaust 6A5-6
Manifold, Engine, Intake 6A5-4
Manual Shaft and Parking Pawl Assembly,
Transmission 200-4R-15
Manual Shaft and Parking Pawl Removal,
Transmission 200-4R-12
Manually Controlled Air Conditioning 1B-1
Mounts, Engine 6A5-33

N

Noise and Air Leak Check, Turbocharger 6J-3

O

Oil and Viscosity, Engine 0B-1
Oil Cooler and Adapter, Engine. 6A5-21
Oil Cooler Flushing Procedure,
Transmission 7A-4
Oil Pan, Engine 6A5-20
Oil Pressure, Engine, Testing 6A5-21
Oil Pump Assembly, Transmission. 200-4R-35
Oil Pump Cover and Gears, Engine 6A5-22
Oil Pump Pipe and Screen Assembly, Engine 6A5-20
Oil Pump, Engine, Priming 6A5-21
Oil Seal, Engine, Front Cover 6A5-17
Oil Seal, Engine, Rear Main Bearing Lower. 6A5-31
Oil Seal, Engine, Rear Main Bearing Upper 6A5-31
Oil Seal, Transmission, Rear 7A-10
Options, Regular Production 0A-1
Output Shaft End Play Check, Transmission,
Front Internal Gear to 200-4R-9, 200-4R-23
Overdrive Carrier Assembly, Transmission,
Overrun Clutch and. 200-4R-32
Overdrive Internal Gear, Transmission 200-4R-31
Overdrive Unit End Play Check,
Transmission 200-4R-41, 200-4R-8
Overrun Clutch and Overdrive Carrier
Assembly, Transmission 200-4R-32

P

Pan, Engine, Oil 6A5-20
Parking Pawl Assembly, Transmission,
Manual Shaft and 200-4R-15
Parking Pawl Removal, Transmission,
Manual Shaft and 200-4R-12
Passages, Auto Trans Diagnosis, Fluid. 200-4R-47
Pipe and Screen Assembly, Engine,
Oil Pump. 6A5-20
Pipe, Crossover. 6F-2
Pipe, Exhaust 6F-1
Pipes, Heater Hoses and 1B-1
Piston and Connecting Rod Assembly, Engine 6A5-23
Piston Assemblies, Transmission,
1-2 and 3-4 Accumulator 200-4R-4
Piston Fitting, Engine 6A5-25
Power Steering Gear and Pump 3B1-1
Power Steering Hose Fitting. 3B1-3
Power Steering Hose Replacement 3B1-1
Power Steering Pump (Reverse Rotation),
TC Series 3B1-4
Power Steering Pump Bracket, Generator,
Compressor and 1B-5, 3B1-4
Power Steering Pump Remote
Reservoir Replacement. 3B1-4
Power Steering Pump Replacement 3B1-3
Preliminary Checking Procedure, Transmission 7A-1
Pressure Check Procedure, Auto Trans
Diagnosis, Fluid 200-4R-3
Pressure Hose, Power Steering. 3B1-1
Pressure, Engine, Testing Oil 6A5-21
Priming Oil Pump, Engine. 6A5-21
Pulley, Coolant Pump 6B-1
Pump (Reverse Rotation),
TC Series Power Steering 3B1-4
Pump Assembly, Transmission, Oil 200-4R-35
Pump Pulley, Coolant 6B-1
Pump Remote Reservoir Replacement,
Power Steering 3B1-4
Pump Replacement, Power Steering 3B1-3
Pump, Coolant 6B-3
Pump, Engine, Priming Oil 6A5-21
Pushrods, Engine, Rocker Arm
Assemblies and. 6A5-8

R

Radiator, Cooling and 6B-1
Rate Test, Engine, Valve Lifter
Leak-Down. 6A5-10
Rear Carrier and Internal Gear,
Transmission 200-4R-15
Rear Carrier Removal, Transmission. 200-4R-12
Rear Carrier, Transmission, Roller
Clutch and 200-4R-17
Rear Main Bearing Lower Oil Seal, Engine 6A5-31
Rear Main Bearing Upper Oil Seal, Engine 6A5-31
Rear Oil Seal, Transmission 7A-10
Rear Seatback 10-9-1
Rear Suspension. 3D-1
Refrigerant Hose. 1B-3
Regular Production Options 0A-1
Remote Reservoir Replacement,
Power Steering Pump. 3B1-4
Removal and Installation,
Transmission Assembly 7A-11
Removal, Transmission, Governor Assembly . . .200-4R-4
Repair, Engine, Thread 6A5-34
Replacement, Engine, Valve Lifter 6A5-10
Replacement, Generator 6D3-1
Reservoir Replacement, Power
Steering Pump Remote. 3B1-4
Reservoir-to-Pump Hose, Power Steering 3B1-2
Retainer, Engine, Valve, Spring and 6A5-13
Return Hose, Power Steering 3B1-1
Return Tube, TC Series Power Steering Pump 3B1-4
Reverse Clutch Housing, Transmission,
Lo and 200-4R-18
Road Test Procedure, Auto Trans Diagnosis 200-4R-2
Road Test, Turbocharger 6J-12
Rocker Arm Assemblies and Pushrods,
Engine 6A5-8
Rocker Covers, Engine, Valve 6A5-7

Rod Assembly, Engine, Piston and Connecting 6A5-23
Roller Clutch and Rear Carrier, Transmission 200-4R-17
Rotating Group and Sleeve Assembly, TC Series Power Steering Pump 3B1-7

S

Scheduled Maintenance Service 0B-1
Scheduled Maintenance Services, Explanation of 0B-1
Screen Assembly, Engine, Oil Pump Pipe and 6A5-20
Seal, TC Series Power Steering Pump, Driveshaft Assembly and 3B1-5
Seal, Transmission, Rear Oil 7A-10
Seatback, Rear 10-9-1
Seats 10-9-1
Serpentine Drive Belt 6B-3
Serviceable Components, Transmission 7A-6
Servo Assembly Removal, Transmission, Intermediate 200-4R-1
Servo Assembly, Transmission 7A-6
Servo Pin Length Check, Transmission 200-4R-4
Servo Unit, Cruise Control 9B-1
Shaft End Play Check, Transmission, Forward Clutch 200-4R-9, 200-4R-30
Shaft, Front Suspension, Stabilizer 3C-1
Shaft, Transmission, Turbine 200-4R-33
Shift Charts, Auto Trans Diagnosis, Speed 200-4R-3
Shoulder Strap Guide 10-9-2
Sleeve Assembly, TC Series Power Steering Pump, Rotating Group and 3B1-7
Speed Shift Charts, Auto Trans Diagnosis 200-4R-3
Speedometer Driven Gear, Transmission 7A-7
Spring and Retainer, Engine, Valve, ...6A5-13
Sprockets, Engine, Timing Chain and 6A5-18
Stabilizer Shaft, Front Suspension 3C-1
Starter, Cranking System 6D2-1
Steering Hose Replacement, Power 3B1-1
Stem Seal, Engine, Valve Spring and 6A5-13
Strap Guide, Shoulder 10-9-2
Support, Transmission, Center 200-4R-29
Suspension, Rear 3D-1
System Capacities, Cooling 0B-1
System Service, EGR 0B-1

T

Tailpipe Extension 6F-4
Tape Insert, Door Handle 10-1-1
TC Series Power Steering Pump (Reverse Rotation) 3B1-4
Tensioner, Drive Belt 6B-4
Tensions, Belt 0B-1
Test Procedure, Auto Trans Diagnosis, Road . . .200-4R-2
Test, Turbocharger, Road 6J-12
Testing Oil Pressure, Engine 6A5-21
Thermostat 6B-1
Third Accumulator Check Valve Removal, Transmission 200-4R-7
Thread Repair, Engine 6A5-34
Timing Chain and Sprockets, Engine 6A5-18
Torque Arm, Rear Suspension 3D-1
Torque Converter Clutch Diagnosis, Automatic Transmission 200-4R-51
Torque Converter Clutch Diagnosis, Transmission 7A-4
Torque Converter Clutch Electrical Controls, Transmission 7A-2
Torque Converter Evaluation, Auto Trans Diagnosis 200-4R-51
Transmission Assembly Removal and Installation . .7A-11
Transmission Disassembly 200-4R-1
Transmission General Information and On-Vehicle Service 7A-1
Transmission Identification 0A-1, 7A-1
Transmission Usage 0A-1
Tube, TC Series Power Steering Pump, Return 3B1-4
Tube, Transmission, Filler 7A-8
Turbine Shaft, Transmission 200-4R-33
Turbocharger 6J-1
Turbocharger Inspection 6J-3
Turbocharger Internal Inspection Procedure 6J-12
Turbocharger, On-Vehicle Service 6J-7
TV Cable, Transmission 7A-4

U

Unit End Play Check, Transmission, Overdrive 200-4R-41
Unit, Cruise Control, Servo 9B-1
Usage, Transmission 0A-1

V

Valve Assembly, TC Series Power Steering Pump, Control 3B1-4
Valve Assembly, Transmission, Control 200-4R-44
Valve Assembly, Transmission, Control 7A-9
Valve Body and Wiring Harness, Transmission 200-4R-3
Valve Lifter Diagnosis, Engine 6A5-9
Valve Lifter Leak-Down Rate Test, Engine 6A5-10
Valve Lifter Replacement, Engine 6A5-10
Valve Lifters, Engine 6A5-9
Valve Rocker Covers, Engine 6A5-7
Valve Spring and Stem Seal, Engine 6A5-13
Valve, Spring and Retainer, Engine 6A5-13
Vehicle Identification Number 0A-1
Vibration Test Procedure, Transmission, Flywheel/Torque Converter 7A-1
Viscosity, Engine Oil and 0B-1

W

Wastegate Actuator, Turbocharger 6J-9
Wastegate/Boost Pressure Test Procedure, Turbocharger 6J-12
Wiring Diagrams, Auto Trans Diagnosis, Electrical 200-4R-46
Wiring, Engine 6D5-1
Wiring Harness, Transmission, Valve Body and 200-4R-3

PONTIAC

GM

80

Service Manual Supplement