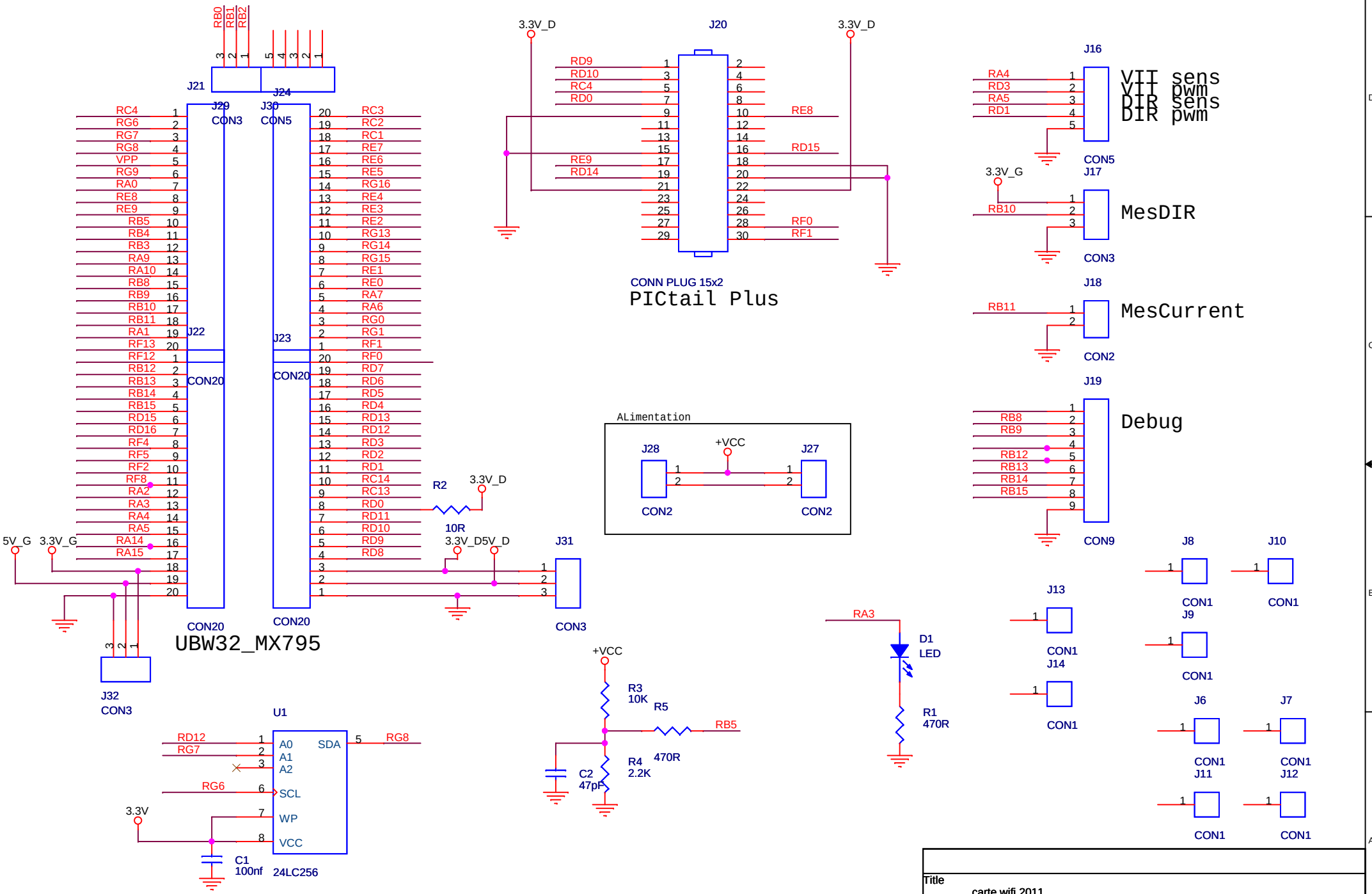

Title	carte wifi 2011	
Size A4	Document Number H Descoubes /O. Clouard	Rev O.C
Date: Thursday, June 23, 2011	Sheet 1 of 1	