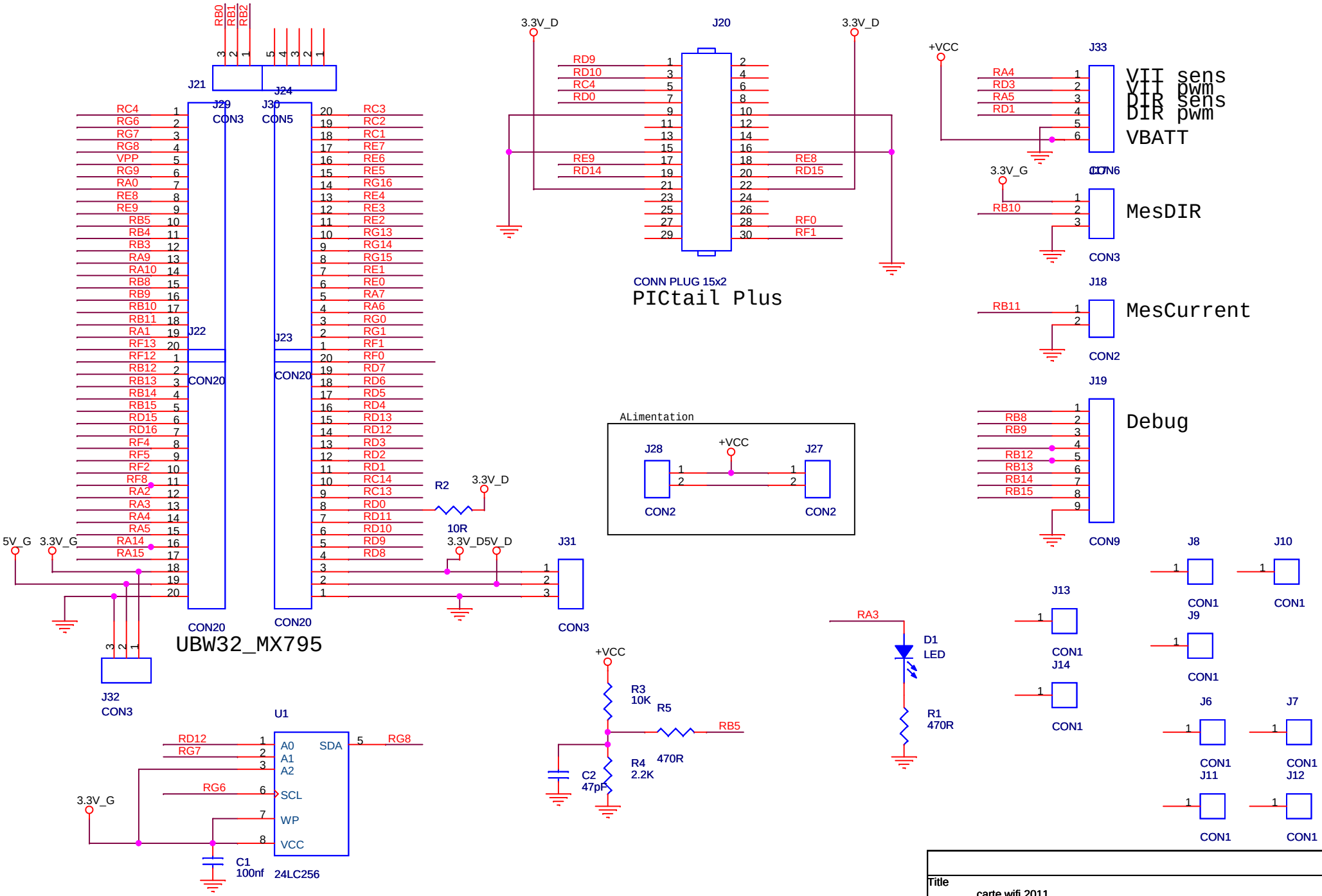

Title	carte wifi 2011	
Size A4	Document Number H Descoubes /O. Clouard	Rev O.C
Date: Monday, July 04, 2011	Sheet 1 of 1	