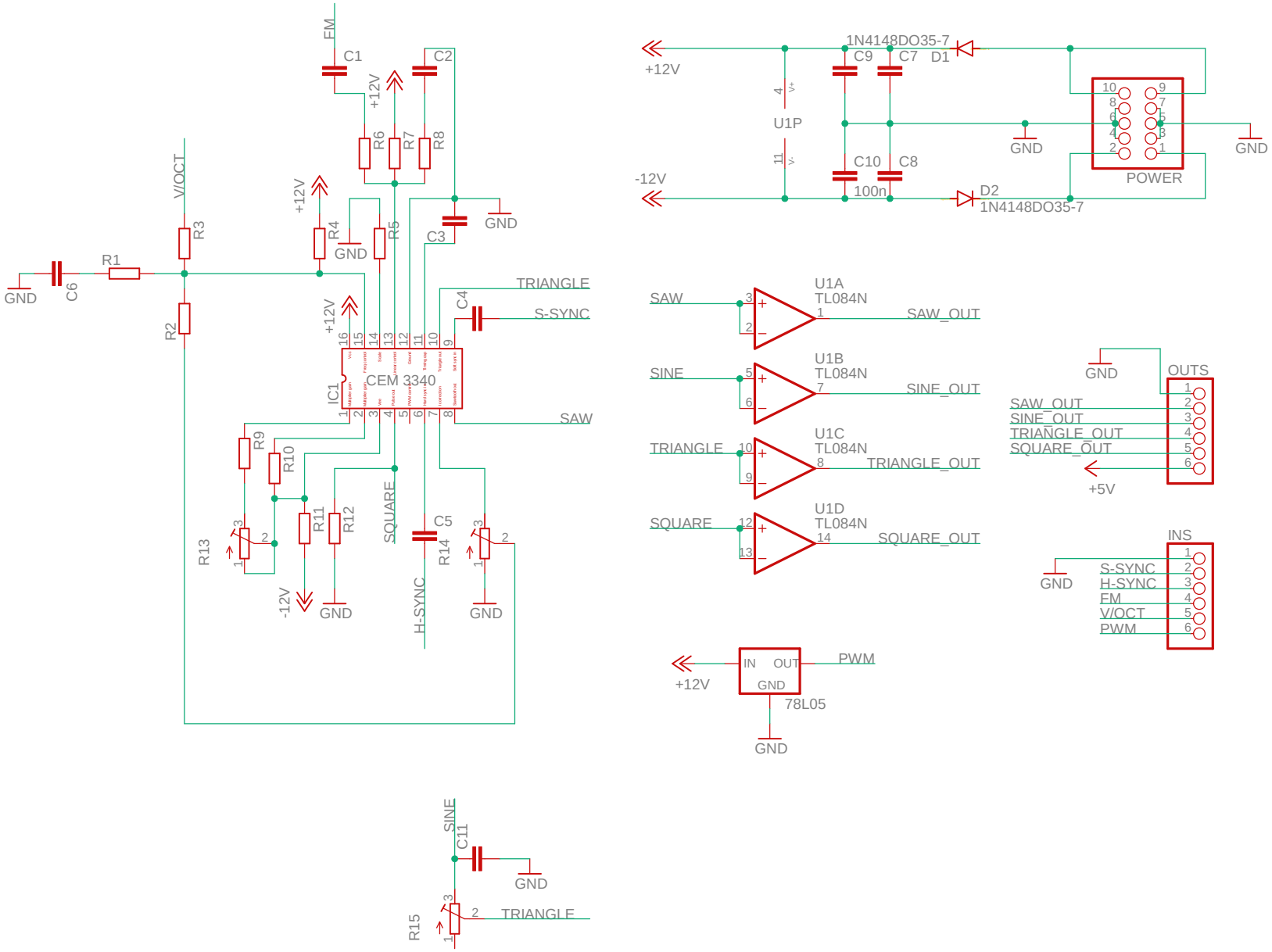

20.02.2019 18:03 E:\Docs\EAGLE\projects\VCO CEM3340\VCO1.1.sch (Sheet: 1/1)