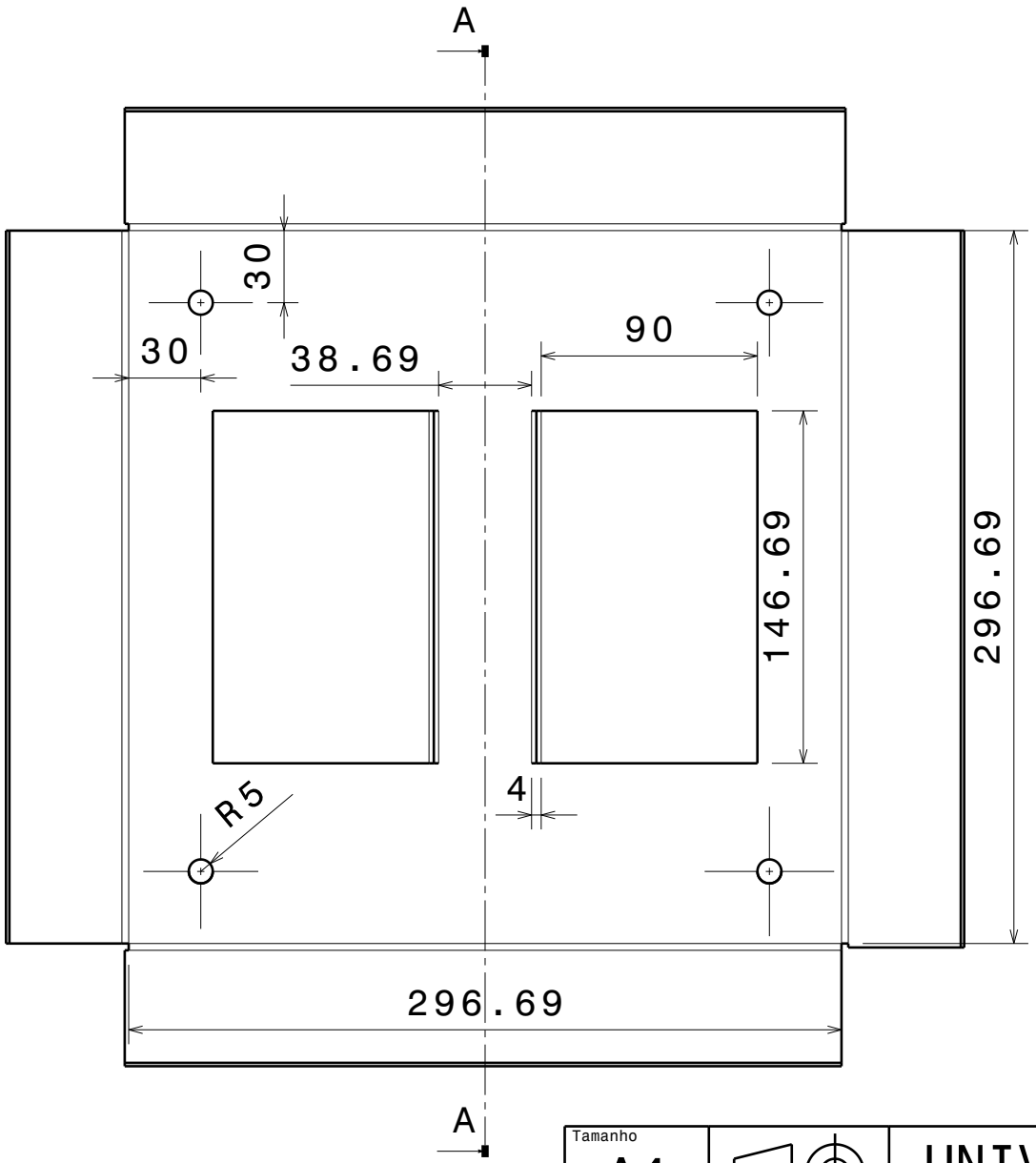

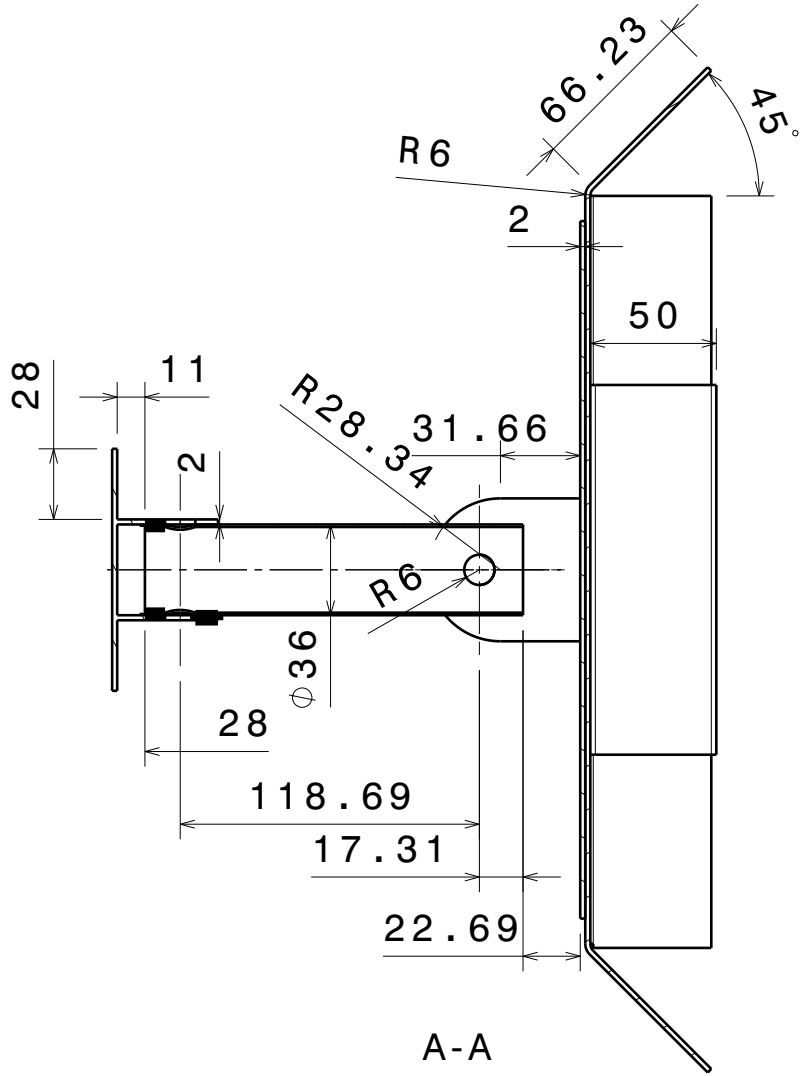

Tamanho		UNIVERSIDADE DE BRASÍLIA - FGA	
A4			
Escala	Peso (kg)	COMPONTENTE	Folha
1:3	4,96	Antena Radar	2/3

This drawing is our property; it can't be reproduced or communicated without our written agreement.