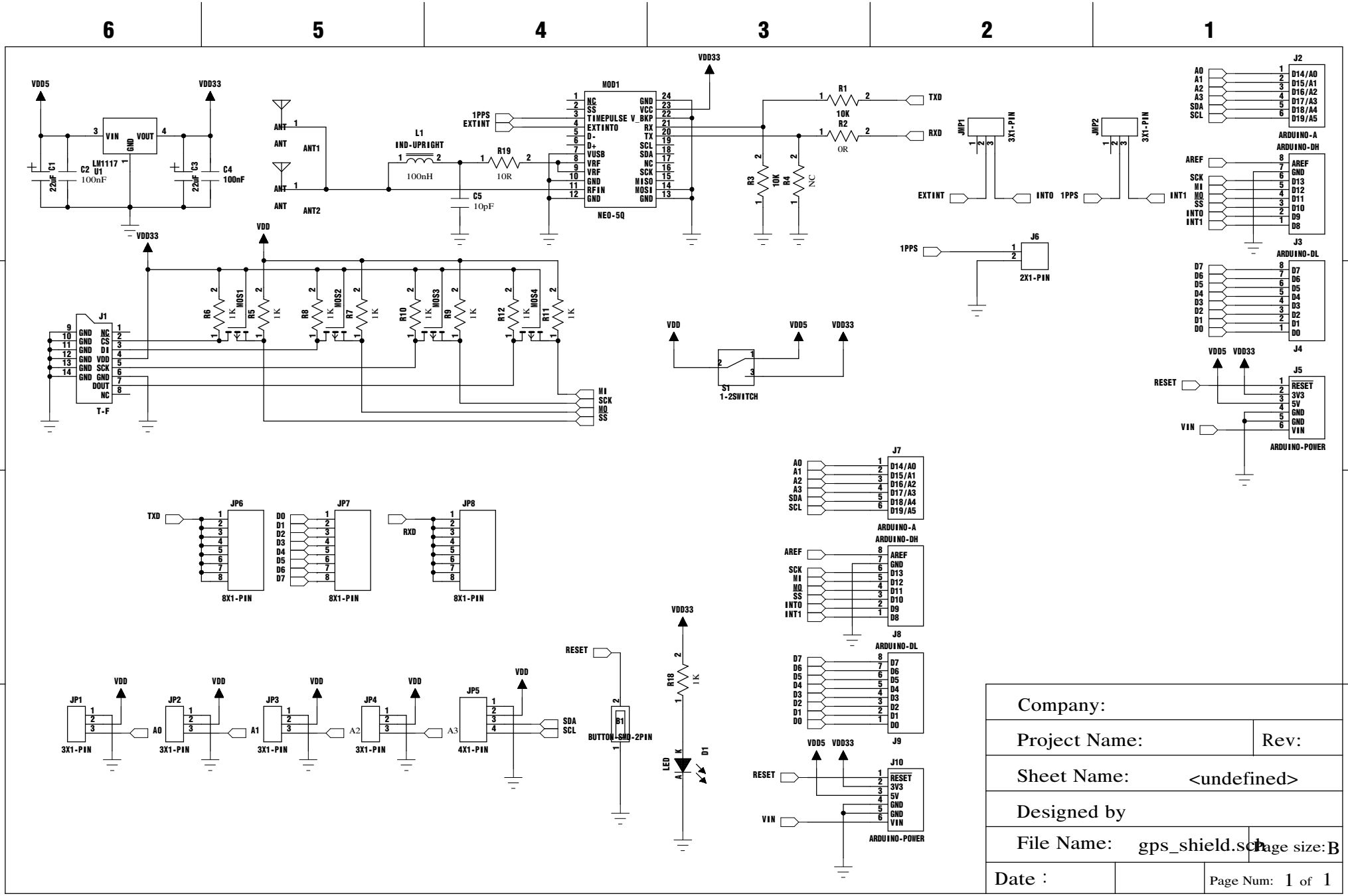
VDD5
VDD33
LM1117
U1
VIN
VOUT
GND
C1
22uF
C2
100nF
C3
22uF
C4
100nF
ANT
ANT1
ANT2
L1
IND-UPRIGHT
100nH
R19
10R
C5
10pF
MOD1
NEO-5Q
1PPS
EXTINT
TIMEPULSE
EXTINTO
D-
D+
VUSB
VRF
GND
RFIN
NC
SS
V_BKP
VCC
RX
TX
SCL
SDA
MISO
MOSI
SCK
R1
10K
R2
0R
TXD
RXD
R3
10K
R4
NC
JMP1
JMP2
3X1-PIN
INT0
INT1
J6
2X1-PIN
J2
ARDUINO-A
J3
ARDUINO-DH
J4
ARDUINO-DL
J5
ARDUINO-POWER
RESET
3V3
5V
VIN
VDD
J1
T-F
MOS1
MOS2
MOS3
MOS4
R5
R6
R7
R8
R9
R10
R11
R12
1K
MI
MO
S1
1-2SWITCH
J7
J8
J9
J10
JP6
JP7
JP8
8X1-PIN
JP1
JP2
JP3
JP4
JP5
4X1-PIN
A0
A1
A2
A3
SDA
SCL
B1
BUTTON-SMD-2PIN
R18
LED
D1
Company:
Project Name:
Rev:
Sheet Name:
<undefined>
Designed by
File Name:
gps_shield.sch
Page size: B
Date :
Page Num: 1 of 1