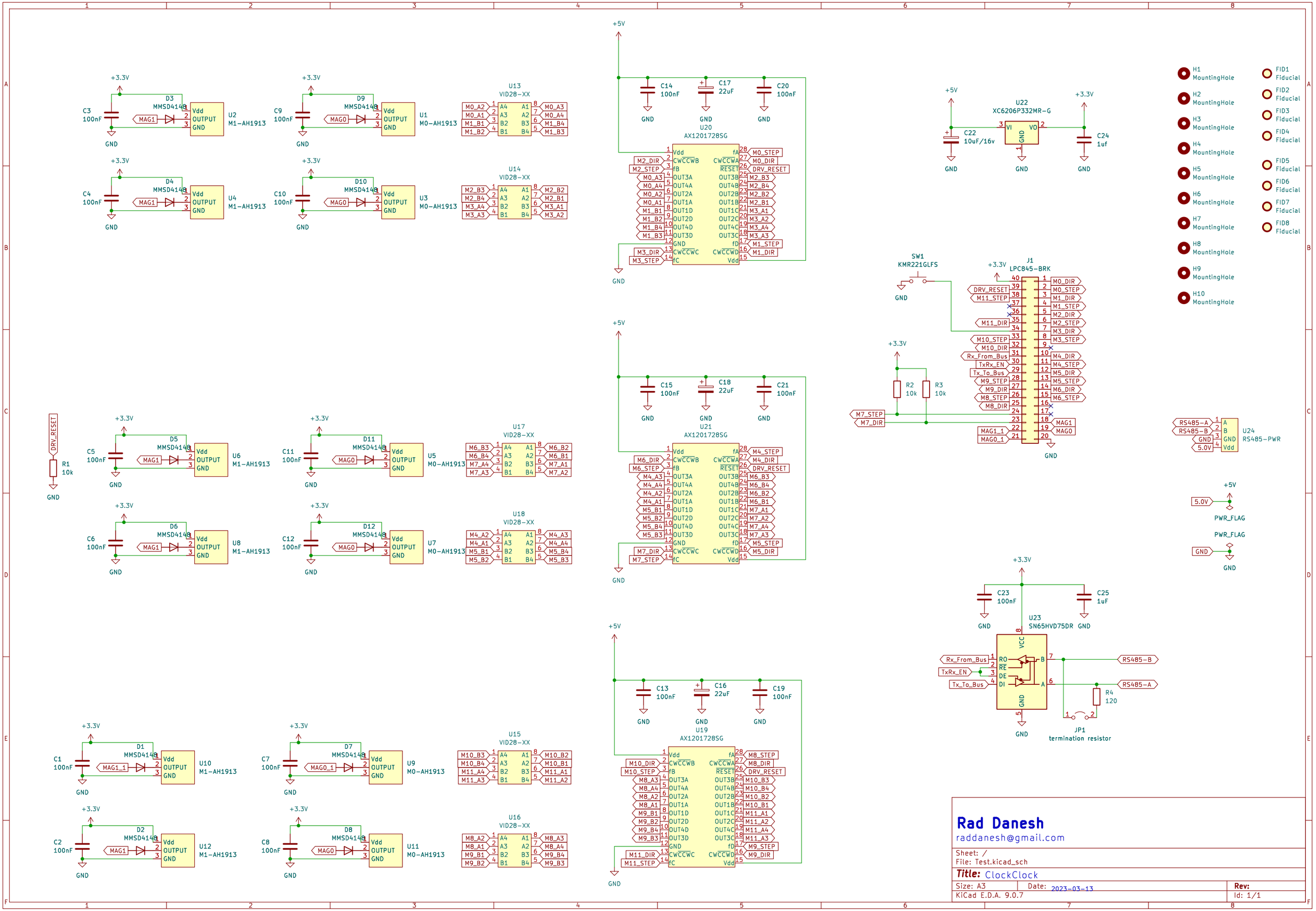
U2 M1-AH1913
U1 M0-AH1913
U4 M1-AH1913
U3 M0-AH1913
U6 M1-AH1913
U5 M0-AH1913
U8 M1-AH1913
U7 M0-AH1913
U10 M1-AH1913
U9 M0-AH1913
U12 M1-AH1913
U11 M0-AH1913
U13 VID28-XX
U14 VID28-XX
U17 VID28-XX
U18 VID28-XX
U15 VID28-XX
U16 VID28-XX
U20 AX1201728SG
U21 AX1201728SG
U19 AX1201728SG
U22 XC6206P332MR-G
U23 SN65HVD75DR
J1 LPC845-BRK
U24 RS485-PWR
SW1 KMR221GLFS
JP1 termination resistor
H1 MountingHole
H2 MountingHole
H3 MountingHole
H4 MountingHole
H5 MountingHole
H6 MountingHole
H7 MountingHole
H8 MountingHole
H9 MountingHole
H10 MountingHole
FID1 Fiducial
FID2 Fiducial
FID3 Fiducial
FID4 Fiducial
FID5 Fiducial
FID6 Fiducial
FID7 Fiducial
FID8 Fiducial
Rad Danesh
raddanesh@gmail.com
Sheet: /
File: Test.kicad_sch
Title: ClockClock
Size: A3
Date: 2023-03-13
Rev:
KiCad E.D.A. 9.0.7
Id: 1/1