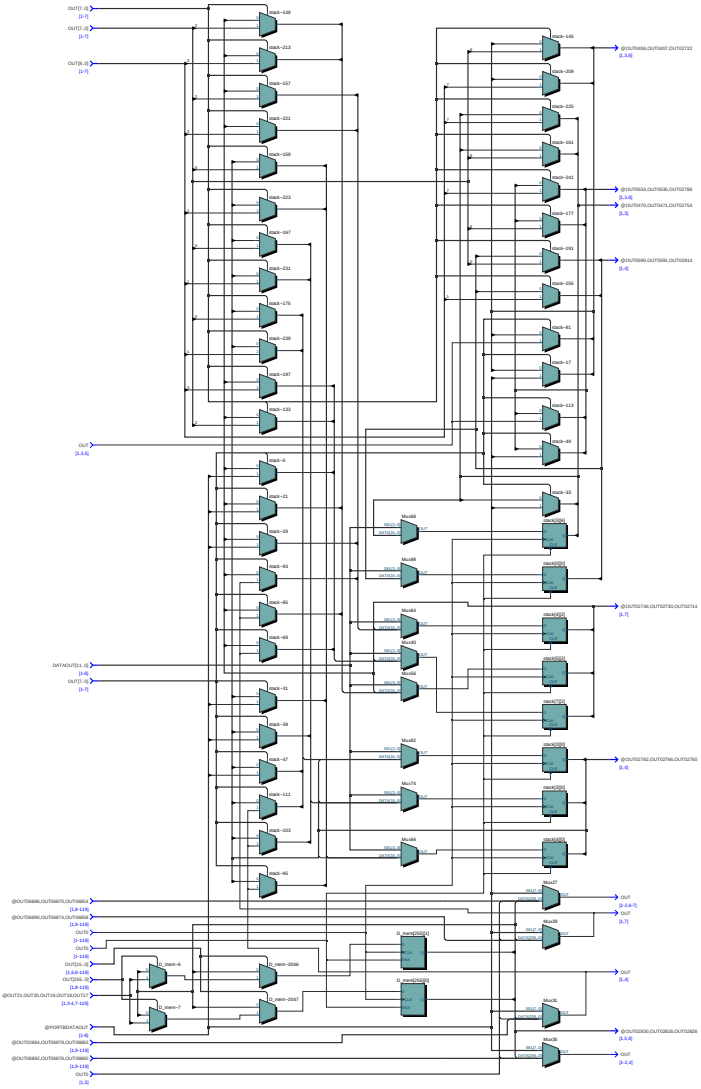
OUT[7..0]
[1-7]
OUT[7..0]
[1-7]
OUT[8..0]
[1-7]
OUT
[1,3,5]
DATAOUT[1..0]
[1-8]
OUT[7..0]
[1-7]
@OUT06686,OUT06670,OUT06654
[1,9-116]
@OUT06690,OUT06674,OUT06658
[1,9-116]
OUT0
[1-116]
OUT0
[1-116]
OUT[15..0]
[1,9-116]
OUT[56..0]
[1,9-116]
@OUT21,OUT20,OUT19,OUT18,OUT17
[1,3-4,7-116]
@PORTBDATAOUT
[1-8]
@OUT06684,OUT06670,OUT06652
[1,9-116]
@OUT06692,OUT06676,OUT06660
[1,9-116]
OUT0
[1,5]
stack-149
stack-213
stack-157
stack-221
stack-159
stack-223
stack-167
stack-231
stack-175
stack-239
stack-167
stack-103
stack-6
stack-21
stack-29
stack-63
stack-45
stack-49
stack-31
stack-39
stack-47
stack-111
stack-103
stack-45
D_mem-6
D_mem-7
D_mem-2046
D_mem-2047
Mux68
Mux68
Mux68
Mux40
Mux46
Mux62
Mux74
Mux46
D_mem[2523]
D_mem[2523]
stack-145
stack-209
stack-225
stack-161
stack-241
stack-177
stack-191
stack-255
stack-81
stack-17
stack-113
stack-49
stack-33
stack[2523]
stack[2523]
stack[2523]
stack[2523]
stack[2523]
stack[2523]
stack[2523]
stack[2523]
stack[2523]
Mux37
Mux39
Mux36
Mux38
@OUT05436,OUT03437,OUT02722
[3,3,4]
@OUT05534,OUT03535,OUT02798
[3,3,4]
@OUT03470,OUT03471,OUT02754
[3,4]
@OUT05590,OUT0594,OUT03814
[3,4]
@OUT02746,OUT02730,OUT02714
[3,7]
@OUT02762,OUT02746,OUT02750
[3,4]
OUT
[3-2,6-7]
OUT
[3,7]
OUT
[3,4]
@OUT02830,OUT02826,OUT02826
[3,3,4]
OUT
[3-2,4]

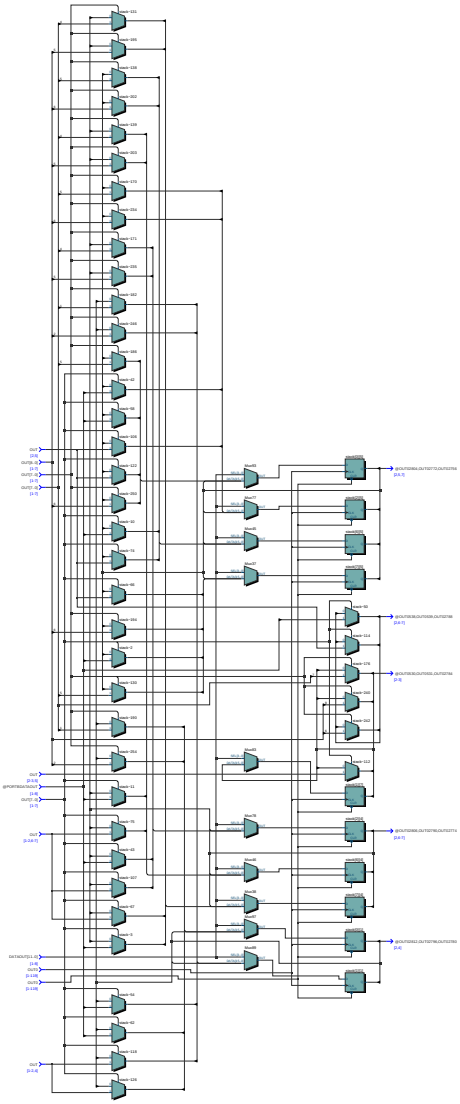

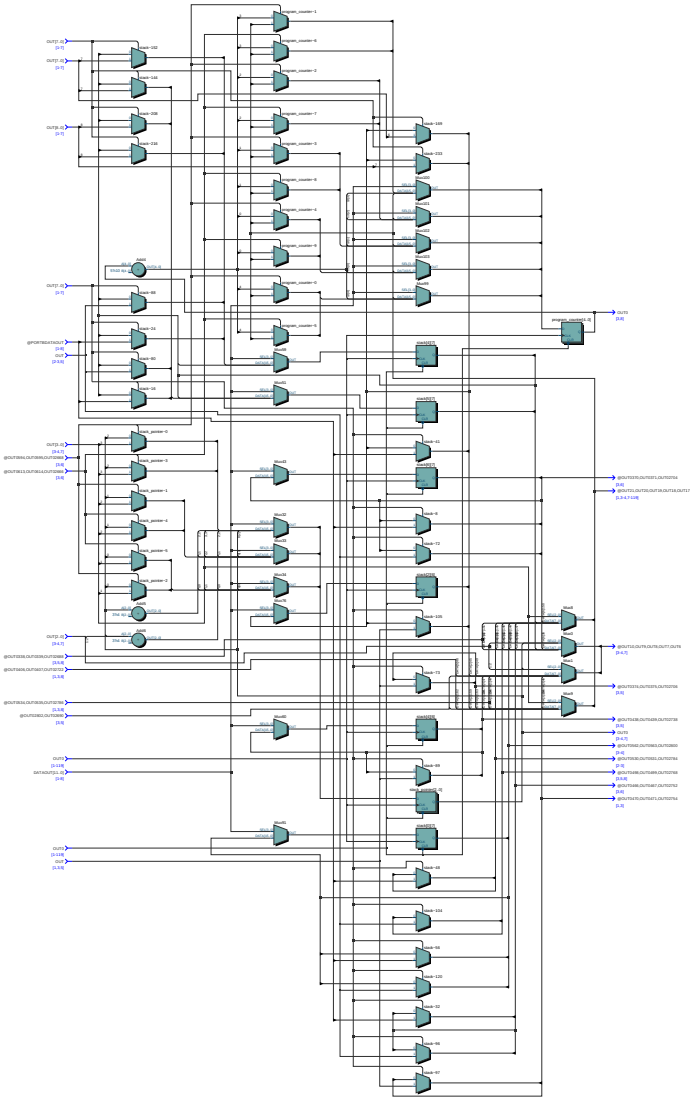

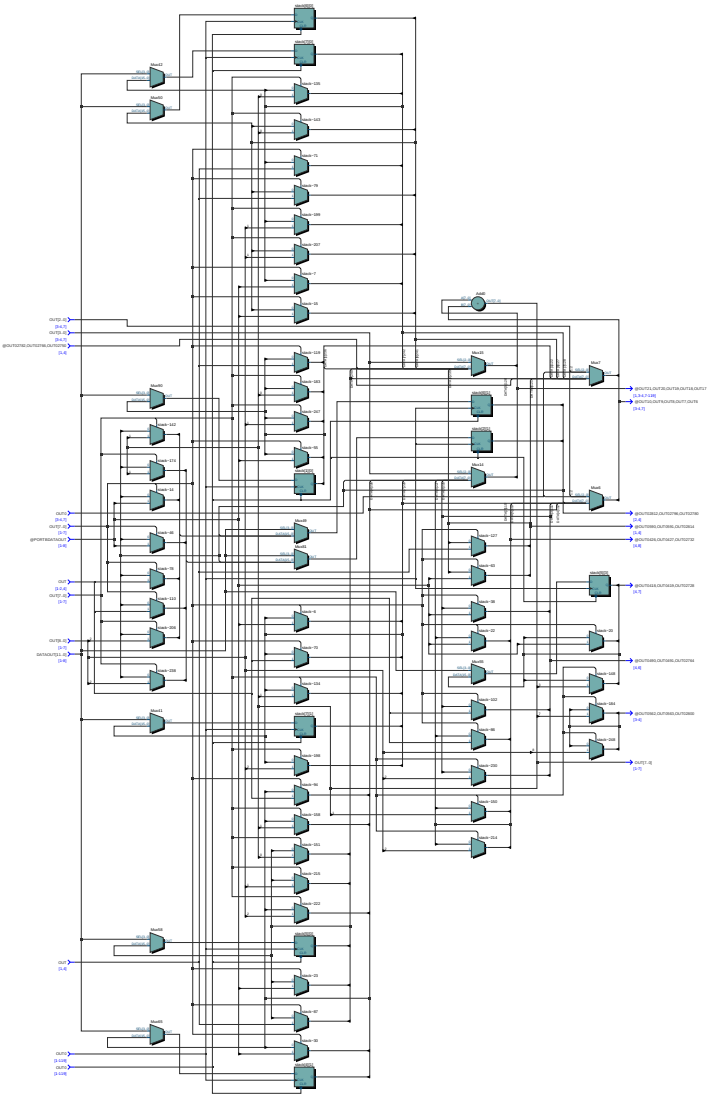

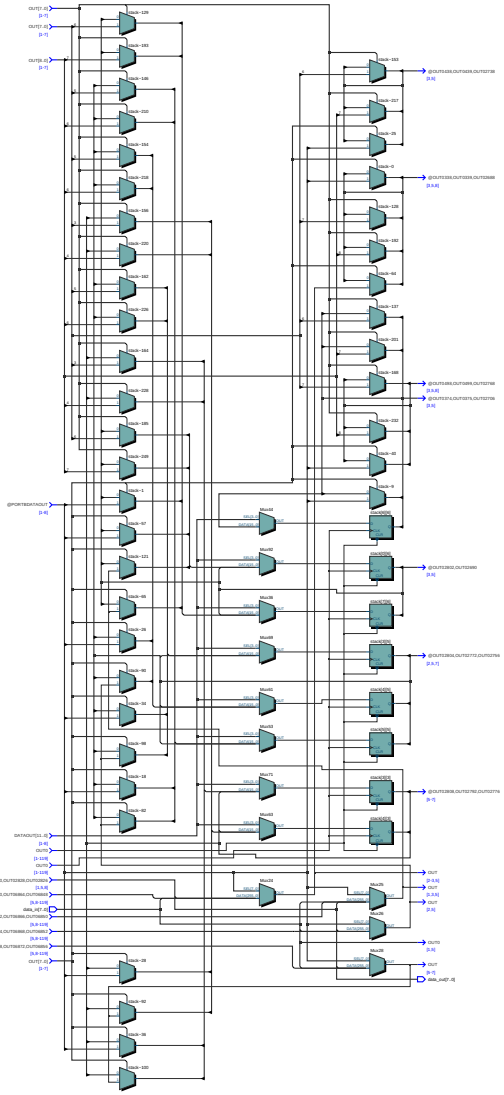
OUT[7..0]
[0..7]
OUT[7..0]
[0..7]
OUT[8..0]
[0..7]
block~129
block~193
block~145
block~210
block~154
block~219
block~196
block~220
block~162
block~226
block~164
block~228
block~165
block~229
block~1
block~17
block~121
block~65
block~24
block~81
block~31
block~98
block~18
block~82
block~29
block~92
block~36
block~100
@PORTBDATAOUT
[0..8]
DATAOUT[11..0]
[0..8]
CLTO
[0..319]
CLTO
[0..319]
@CLUT2836,CLUT2528,CLUT2529
[0..8]
@CLUT6692,CLUT6694,CLUT6695
[8,9-319]
data_in[7..0]
@CLUT6692,CLUT6694,CLUT6695
[8,9-319]
@CLUT6694,CLUT6695,CLUT6693
[8,9-319]
@CLUT6695,CLUT6693,CLUT6694
[8,9-319]
OUT[7..0]
[0..7]
Mux62
Mux92
Mux28
Mux99
Mux65
Mux59
Mux71
Mux93
Mux34
Mux25
Mux26
Mux29
block~193
@CLUT3439,CLUT3439,CLUT2739
[8,9]
block~217
block~25
block~0
@CLUT3339,CLUT3339,CLUT2688
[8,9,10]
block~126
block~192
block~62
block~137
block~201
block~130
@CLUT3189,CLUT3189,CLUT2798
[8,9,10]
@CLUT3174,CLUT3375,CLUT2726
[8,9]
block~232
block~92
block~9
mux4(2CE)
mux4(2CE)
@CLUT3632,CLUT2690
[8,9]
mux4(2CE)
mux4(2CE)
mux4(2CE)
@CLUT3654,CLUT2772,CLUT2766
[8,9,11]
mux4(2CE)
mux4(2CE)
mux4(2CE)
@CLUT3638,CLUT2782,CLUT2776
[9-11]
mux4(2CE)
mux4(2CE)
OUT
[8,9,10]
OUT
[8,9,10]
OUT
[8,9]
OUT0
[9,10]
OUT
[9,10]
data_out[7..0]

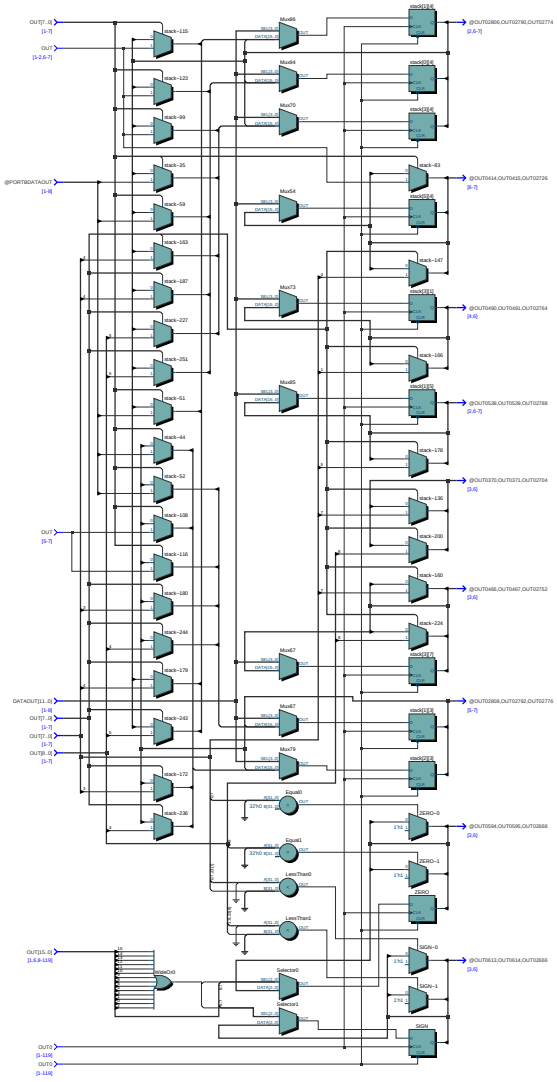
OUT[7..0]
[1-7]
OUT
[1-2,6-7]
@PORTBDATAOUT
[1-8]
OUT
[5-7]
DATAOUT[11..0]
[1-8]
OUT[7..0]
[1-7]
OUT[7..0]
[1-7]
OUT[8..0]
[1-7]
OUT[11..0]
[1,6,8-116]
OUT0
[1-116]
OUT0
[1-116]
stack-115
stack-123
stack-99
stack-35
stack-59
stack-163
stack-187
stack-227
stack-251
stack-51
stack-44
stack-52
stack-108
stack-116
stack-180
stack-244
stack-179
stack-243
stack-172
stack-236
Mux66
Mux64
Mux70
Mux64
Mux73
Mux65
Mux67
Mux67
Mux79
Equal0
Equal1
LessThan0
LessThan1
MuxOx0
Selector0
Selector1
stack[0][6]
stack-83
stack[0][6]
stack-147
stack[0][1]
stack-195
stack[0][5]
stack-179
stack-136
stack-200
stack-160
stack-224
stack[0][7]
stack[0][8]
stack[0][8]
ZERO-0
ZERO-1
ZERO
SIGN-0
SIGN-1
SIGN
@OUT02806,OUT02790,OUT02774
[2,6-7]
@OUT0414,OUT0415,OUT02726
[6-7]
@OUT0490,OUT0491,OUT02764
[4,6]
@OUT0538,OUT0539,OUT02788
[2,6-7]
@OUT0370,OUT0371,OUT02704
[2,6]
@OUT0466,OUT0467,OUT02752
[3,6]
@OUT02808,OUT02792,OUT02776
[5-7]
@OUT0594,OUT0595,OUT02668
[3,6]
@OUT0613,OUT0614,OUT02666
[3,6]

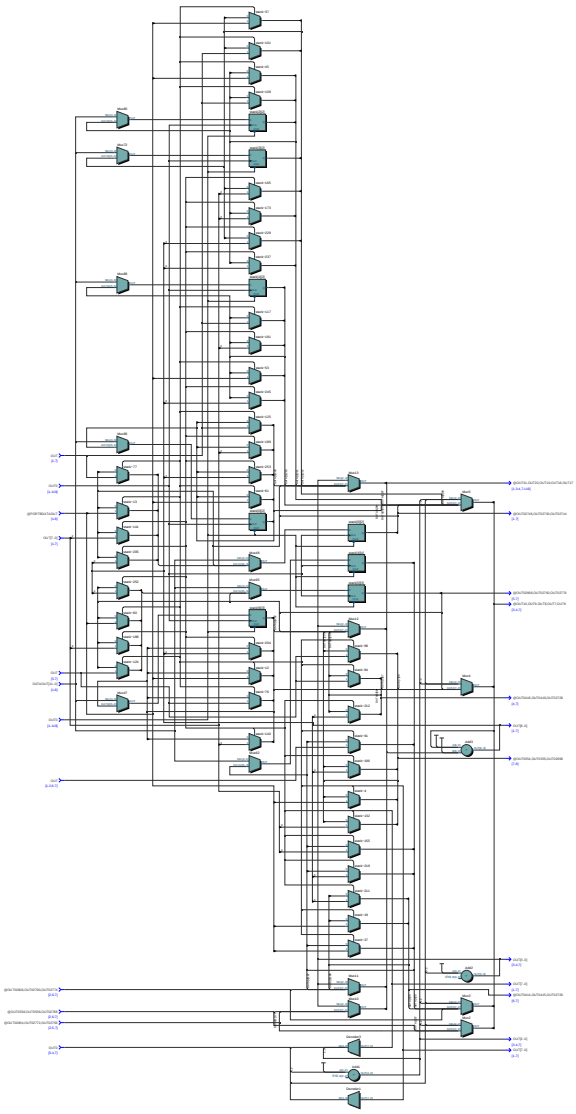

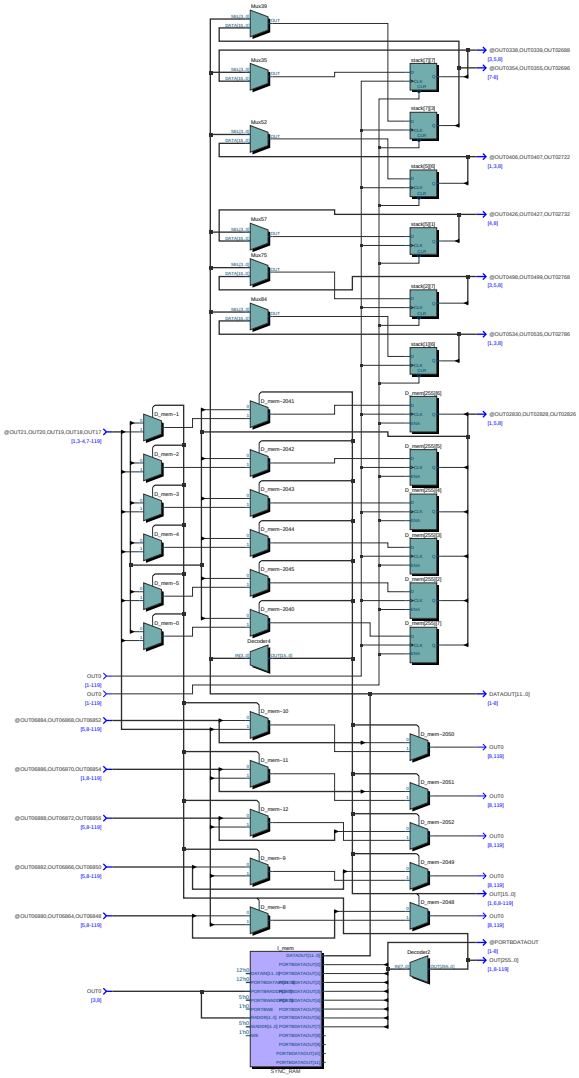
Mux39
Mux55
Mux52
Mux57
Mux75
Mux84
stack[7:0]
stack[255]
stack[254]
stack[253]
stack[252]
stack[251]
@OUT0338,OUT0339,OUT02688
[1,5,8]
@OUT0354,OUT0355,OUT02696
[7-8]
@OUT0406,OUT0407,OUT02722
[1,3,8]
@OUT0426,OUT0427,OUT02732
[4,8]
@OUT0498,OUT0499,OUT02768
[3,5,8]
@OUT0534,OUT0535,OUT02786
[1,3,8]
@OUT02830,OUT02829,OUT02826
[1,5,8]
D_mem[255]
D_mem[254]
D_mem[253]
D_mem[252]
D_mem[251]
D_mem-1
D_mem-2
D_mem-3
D_mem-4
D_mem-5
D_mem-0
D_mem-2041
D_mem-2042
D_mem-2043
D_mem-2044
D_mem-2045
D_mem-2040
Decoder4
@OUT21,OUT20,OUT19,OUT18,OUT17
[1,3-4,7-11]
OUT0
[1-11]
OUT0
[1-11]
DATAOUT[11..0]
[1-8]
@OUT06884,OUT06968,OUT06852
[5,8-11]
@OUT06886,OUT06870,OUT06854
[1,8-11]
@OUT06888,OUT06872,OUT06856
[5,8-11]
@OUT06882,OUT06866,OUT06850
[5,8-11]
@OUT06880,OUT06864,OUT06848
[5,8-11]
D_mem-10
D_mem-11
D_mem-12
D_mem-9
D_mem-8
D_mem-2050
D_mem-2051
D_mem-2052
D_mem-2049
D_mem-2048
OUT0
[8,11]
OUT[15..0]
[1,6,8-11]
OUT0
[3,8]
I_mem
S1762_2449
Decoder2
@PORTBDATAOUT
[1-8]
OUT[255..0]
[1,8-11]

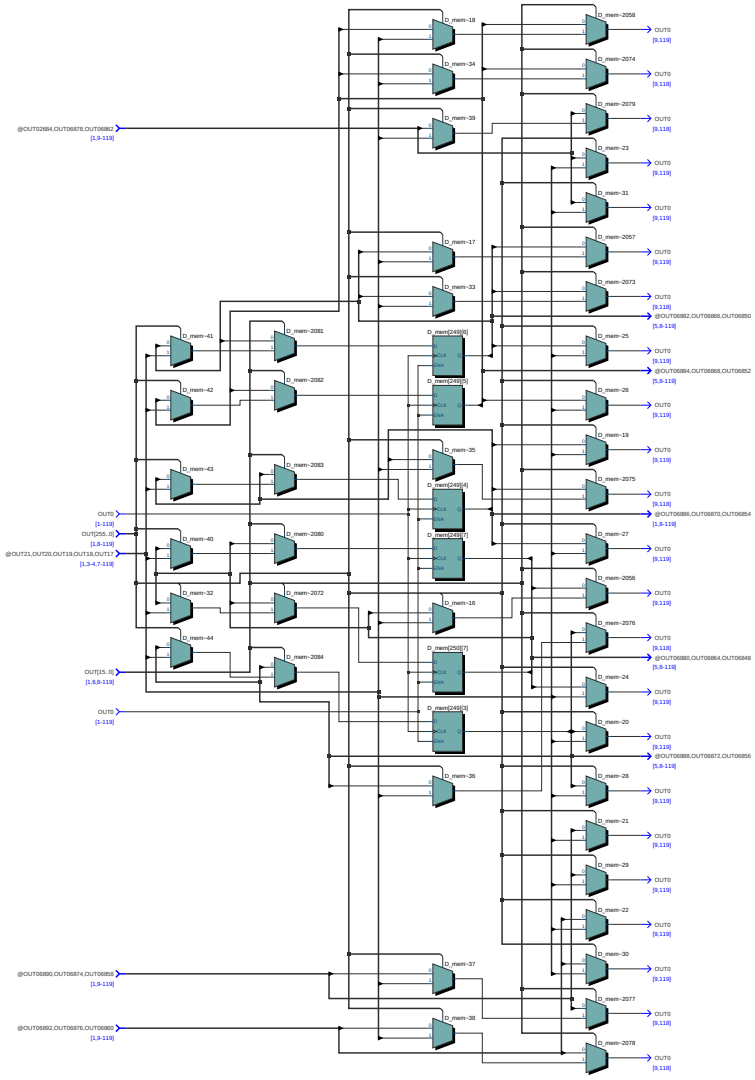
@OUT02684,OUT06878,OUT06862
[1,9-119]
OUT0
[1-119]
OUT[255..0]
[1,8-119]
@OUT21,OUT20,OUT19,OUT18,OUT17
[1,3-4,7-119]
OUT[15..0]
[1,6,8-119]
OUT0
[1-119]
@OUT06890,OUT06874,OUT06858
[1,9-119]
@OUT06892,OUT06876,OUT06860
[1,9-119]
D_mem-18
D_mem-34
D_mem-39
D_mem-17
D_mem-33
D_mem-41
D_mem-42
D_mem-43
D_mem-40
D_mem-32
D_mem-44
D_mem-2081
D_mem-2082
D_mem-2083
D_mem-2080
D_mem-2072
D_mem-2084
D_mem[249][9]
D_mem[249][3]
D_mem-35
D_mem[249][6]
D_mem[249][7]
D_mem-16
D_mem[250][7]
D_mem[249][5]
D_mem-36
D_mem-37
D_mem-38
D_mem-2058
D_mem-2074
D_mem-2079
D_mem-23
D_mem-31
D_mem-2057
D_mem-2073
@OUT06882,OUT06866,OUT06850
[5,8-119]
D_mem-25
@OUT06884,OUT06868,OUT06852
[5,8-119]
D_mem-26
D_mem-19
D_mem-2075
@OUT06886,OUT06870,OUT06854
[1,8-119]
D_mem-27
D_mem-2056
D_mem-2076
@OUT06880,OUT06864,OUT06848
[5,8-119]
D_mem-24
D_mem-20
@OUT06888,OUT06872,OUT06856
[5,8-119]
D_mem-28
D_mem-21
D_mem-29
D_mem-22
D_mem-30
D_mem-2077
D_mem-2078
OUT0
[9,118]
OUT0
[9,119]

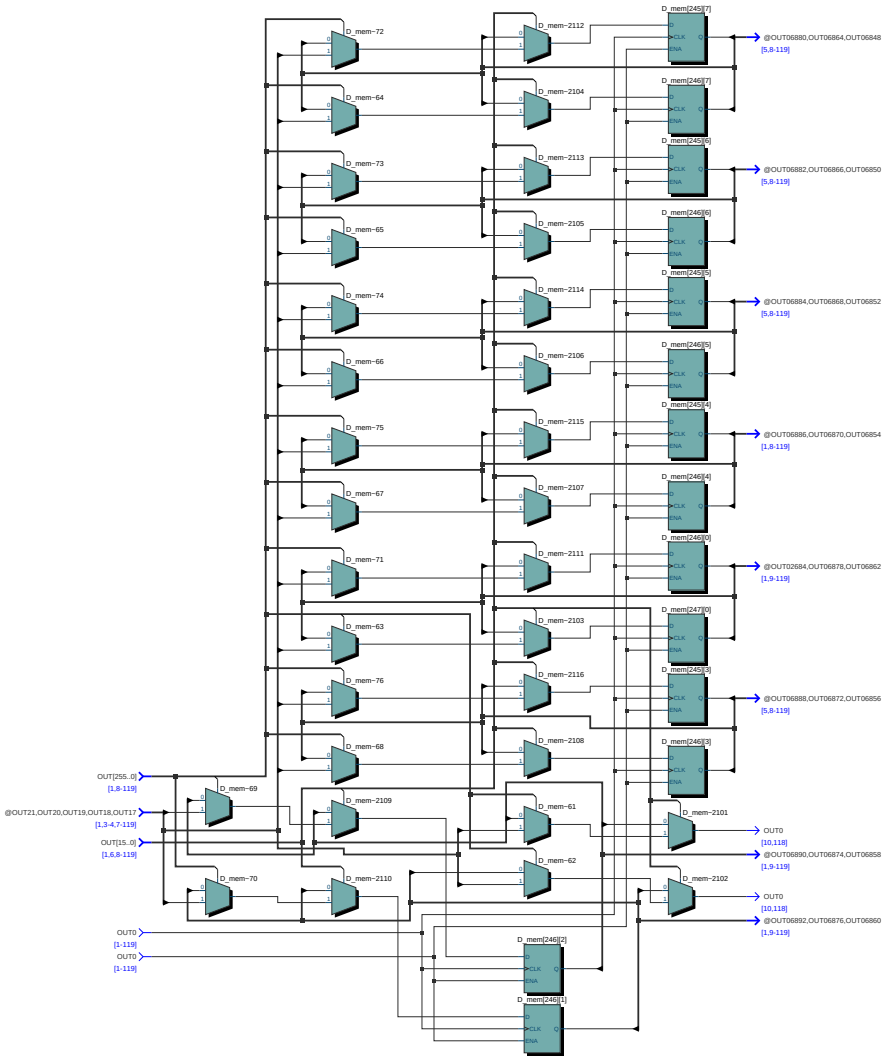
D_mem~72
D_mem~64
D_mem~73
D_mem~65
D_mem~74
D_mem~66
D_mem~75
D_mem~67
D_mem~71
D_mem~63
D_mem~76
D_mem~68
D_mem~69
D_mem~70
D_mem~2109
D_mem~2110
D_mem~2112
D_mem~2104
D_mem~2113
D_mem~2105
D_mem~2114
D_mem~2106
D_mem~2115
D_mem~2107
D_mem~2111
D_mem~2103
D_mem~2116
D_mem~2108
D_mem~61
D_mem~62
D_mem~2101
D_mem~2102
D_mem[245][7]
D_mem[246][7]
D_mem[245][6]
D_mem[246][6]
D_mem[245][5]
D_mem[246][5]
D_mem[245][4]
D_mem[246][4]
D_mem[246][0]
D_mem[247][0]
D_mem[245][3]
D_mem[246][3]
D_mem[246][2]
D_mem[246][1]
D
CLK
Q
ENA
@OUT06880,OUT06864,OUT06848
[5,8-119]
@OUT06882,OUT06866,OUT06850
[5,8-119]
@OUT06884,OUT06868,OUT06852
[5,8-119]
@OUT06886,OUT06870,OUT06854
[1,8-119]
@OUT02684,OUT06878,OUT06862
[1,9-119]
@OUT06888,OUT06872,OUT06856
[5,8-119]
OUT0
[10,118]
@OUT06890,OUT06874,OUT06858
[1,9-119]
OUT0
[10,118]
@OUT06892,OUT06876,OUT06860
[1,9-119]
OUT[255..0]
[1,8-119]
@OUT21,OUT20,OUT19,OUT18,OUT17
[1,3-4,7-119]
OUT[15..0]
[1,6,8-119]
OUT0
[1-119]
OUT0
[1-119]

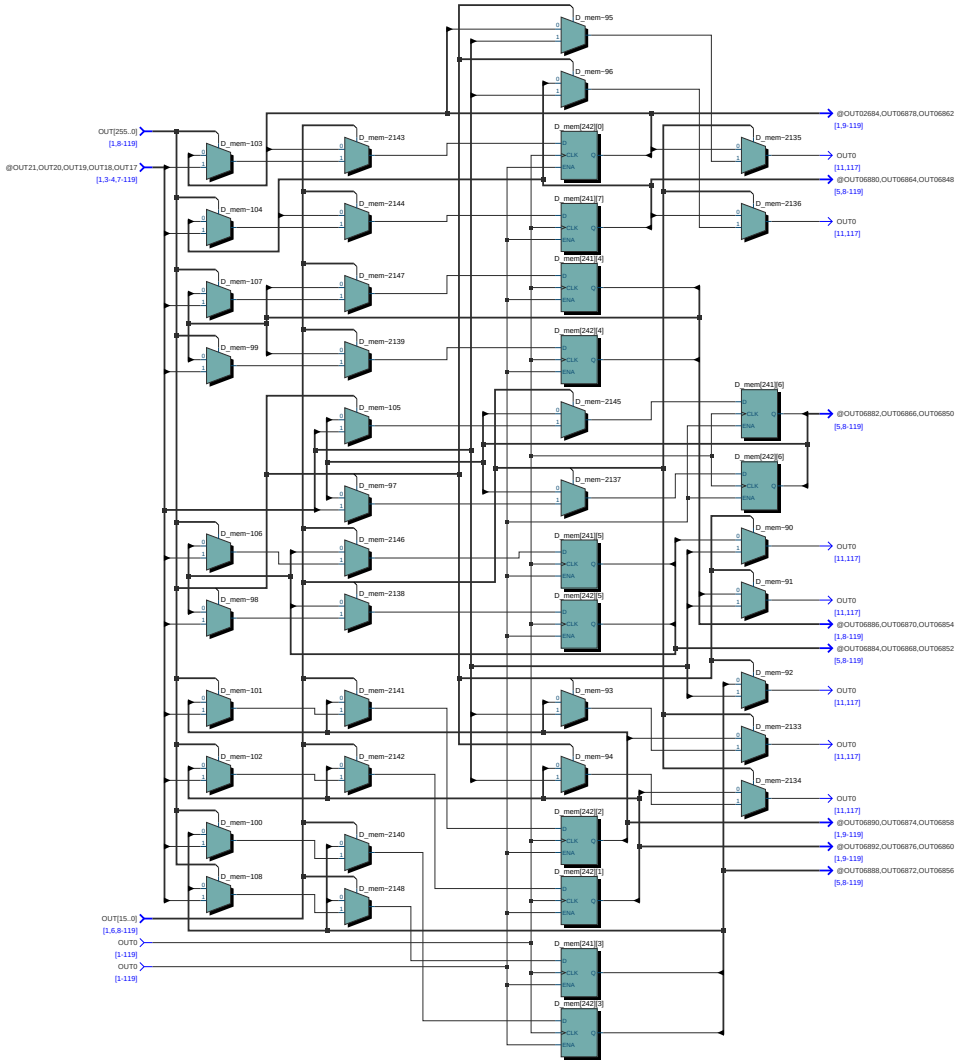
OUT[255..0]
[1,8-119]
@OUT21,OUT20,OUT19,OUT18,OUT17
[1,3-4,7-119]
OUT[15..0]
[1,6,8-119]
OUT0
[1-119]
OUT0
[1-119]
D_mem~103
D_mem~104
D_mem~107
D_mem~99
D_mem~106
D_mem~98
D_mem~101
D_mem~102
D_mem~100
D_mem~108
D_mem~2143
D_mem~2144
D_mem~2147
D_mem~2139
D_mem~105
D_mem~97
D_mem~2146
D_mem~2138
D_mem~2141
D_mem~2142
D_mem~2140
D_mem~2148
D_mem~95
D_mem~96
D_mem[242][0]
D_mem[241][7]
D_mem[241][4]
D_mem[242][4]
D_mem~2145
D_mem~2137
D_mem[241][5]
D_mem[242][5]
D_mem~93
D_mem~94
D_mem[242][2]
D_mem[242][1]
D_mem[241][3]
D_mem[242][3]
D_mem~2135
D_mem~2136
D_mem[241][6]
D_mem[242][6]
D_mem~90
D_mem~91
D_mem~92
D_mem~2133
D_mem~2134
@OUT02684,OUT06878,OUT06862
[1,9-119]
OUT0
[11,117]
@OUT06880,OUT06864,OUT06848
[5,8-119]
OUT0
[11,117]
@OUT06882,OUT06866,OUT06850
[5,8-119]
OUT0
[11,117]
OUT0
[11,117]
@OUT06886,OUT06870,OUT06854
[1,8-119]
@OUT06884,OUT06868,OUT06852
[5,8-119]
OUT0
[11,117]
OUT0
[11,117]
OUT0
[11,117]
@OUT06890,OUT06874,OUT06858
[1,9-119]
@OUT06892,OUT06876,OUT06860
[1,9-119]
@OUT06888,OUT06872,OUT06856
[5,8-119]

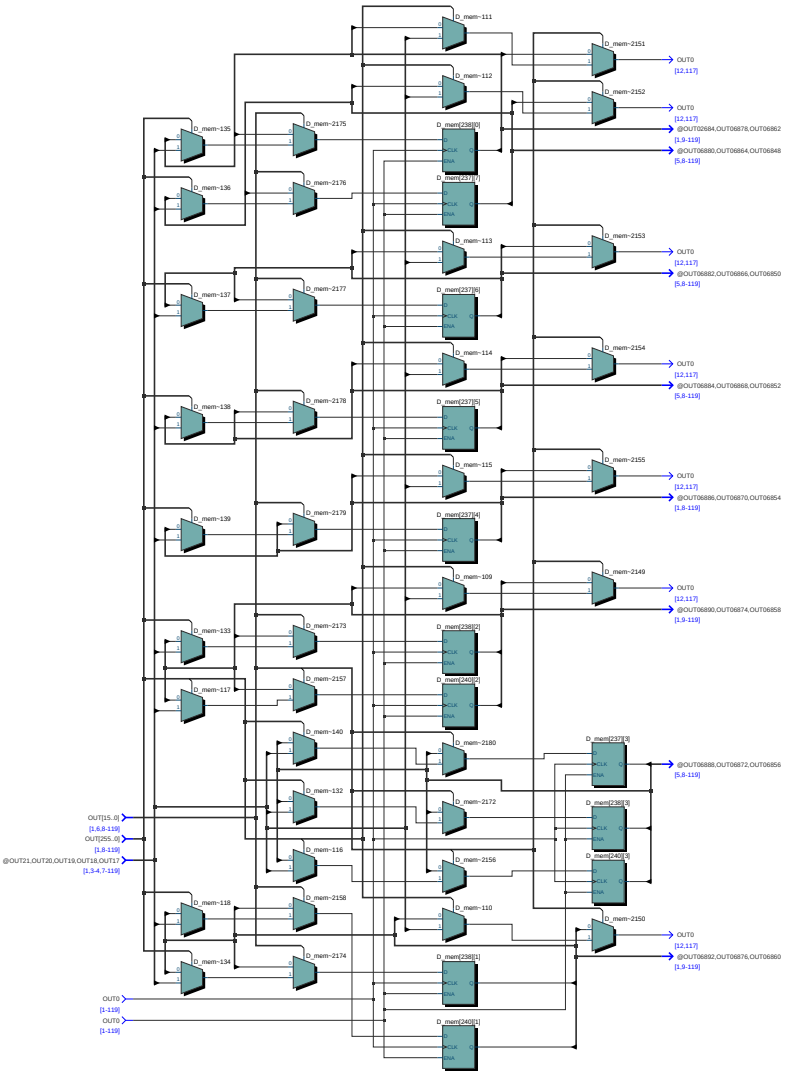
D_mem~111
D_mem~112
D_mem~2151
D_mem~2152
D_mem~135
D_mem~2175
D_mem~136
D_mem~2176
D_mem[238][0]
D_mem[237][7]
D_mem~113
D_mem~2153
D_mem~137
D_mem~2177
D_mem[237][6]
D_mem~114
D_mem~2154
D_mem~138
D_mem~2178
D_mem[237][5]
D_mem~115
D_mem~2155
D_mem~139
D_mem~2179
D_mem[237][4]
D_mem~109
D_mem~2149
D_mem~133
D_mem~2173
D_mem[238][2]
D_mem~117
D_mem~2157
D_mem[240][2]
D_mem~140
D_mem~2180
D_mem[237][3]
D_mem~132
D_mem~2172
D_mem[238][3]
D_mem~116
D_mem~2156
D_mem[240][3]
D_mem~118
D_mem~2158
D_mem~110
D_mem~2150
D_mem~134
D_mem~2174
D_mem[238][1]
D_mem[240][1]
OUT0
[12,117]
@OUT06884,OUT06878,OUT06862
[1,9-119]
@OUT06880,OUT06864,OUT06848
[5,8-119]
@OUT06882,OUT06866,OUT06850
@OUT06884,OUT06868,OUT06852
@OUT06886,OUT06870,OUT06854
@OUT06890,OUT06874,OUT06858
@OUT06888,OUT06872,OUT06856
@OUT06892,OUT06876,OUT06860
OUT[15..0]
[1,6,8-119]
OUT[255..0]
[1,8-119]
@OUT21,OUT20,OUT19,OUT18,OUT17
[1,3-4,7-119]
[1-119]

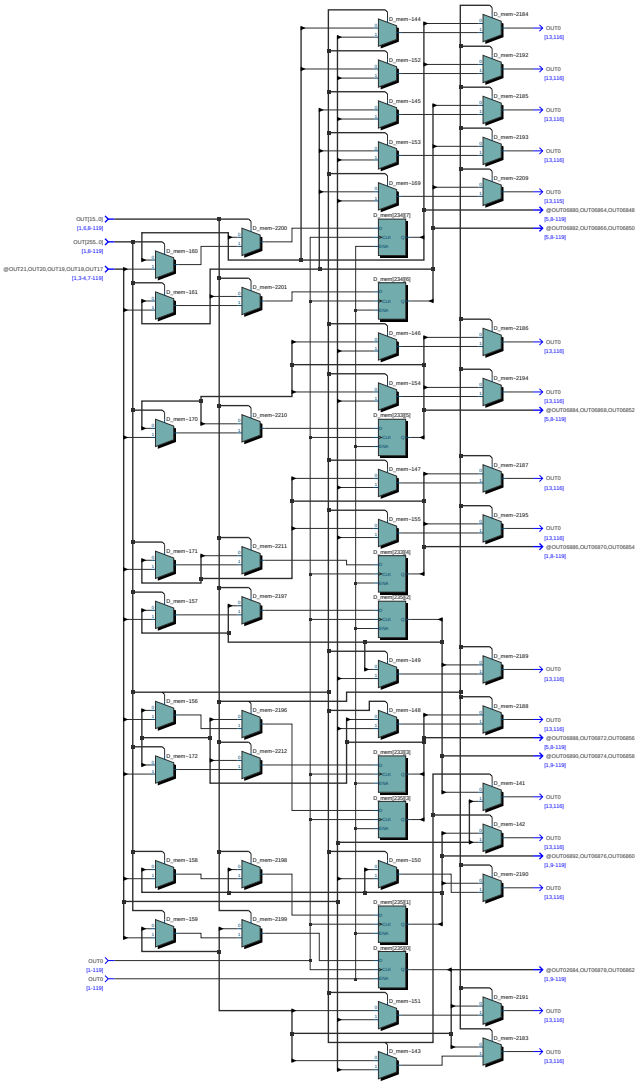
OUT[15..0]
[1,6,8-11]
OUT[255..0]
[1,8-11]
@OUT21,OUT20,OUT19,OUT18,OUT17
[1,3-4,7-11]
OUT0
[1-11]
OUT0
[1-11]
D_mem~2200
D_mem~160
D_mem~161
D_mem~2201
D_mem~170
D_mem~2210
D_mem~171
D_mem~2211
D_mem~157
D_mem~2197
D_mem~156
D_mem~2196
D_mem~172
D_mem~2212
D_mem~158
D_mem~2198
D_mem~159
D_mem~2199
D_mem~144
D_mem~152
D_mem~145
D_mem~153
D_mem~169
D_mem~146
D_mem~154
D_mem~147
D_mem~155
D_mem~149
D_mem~148
D_mem~150
D_mem~151
D_mem~143
D_mem~2184
D_mem~2192
D_mem~2185
D_mem~2193
D_mem~2209
D_mem~2186
D_mem~2194
D_mem~2187
D_mem~2195
D_mem~2189
D_mem~2188
D_mem~141
D_mem~142
D_mem~2190
D_mem~2191
D_mem~2183
OUT0
[13,116]
@OUT06880,OUT06864,OUT06848
[5,8-11]
@OUT06882,OUT06866,OUT06850
[5,8-11]
@OUT06884,OUT06868,OUT06852
[5,8-11]
@OUT06886,OUT06870,OUT06854
[1,8-11]
@OUT06888,OUT06872,OUT06856
[1,9-11]
@OUT06890,OUT06874,OUT06858
[1,9-11]
@OUT06892,OUT06876,OUT06860
[1,9-11]
@OUT02684,OUT06878,OUT06862
[1,9-11]

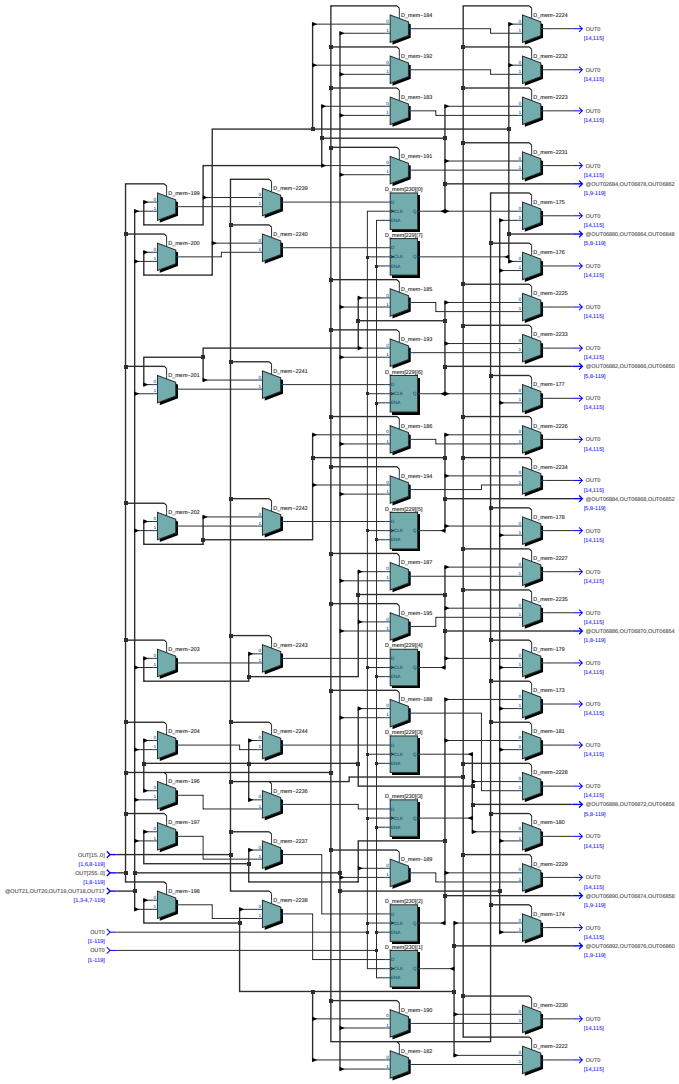
D_mem~184
D_mem~192
D_mem~183
D_mem~191
D_mem~175
D_mem~176
D_mem~185
D_mem~193
D_mem~177
D_mem~186
D_mem~194
D_mem~178
D_mem~187
D_mem~195
D_mem~179
D_mem~173
D_mem~188
D_mem~181
D_mem~189
D_mem~180
D_mem~174
D_mem~190
D_mem~182
D_mem~2224
D_mem~2232
D_mem~2223
D_mem~2231
D_mem~2225
D_mem~2233
D_mem~2226
D_mem~2234
D_mem~2227
D_mem~2235
D_mem~2228
D_mem~2229
D_mem~2230
D_mem~2222
D_mem~199
D_mem~200
D_mem~201
D_mem~202
D_mem~203
D_mem~204
D_mem~196
D_mem~197
D_mem~198
D_mem~2239
D_mem~2240
D_mem~2241
D_mem~2242
D_mem~2243
D_mem~2244
D_mem~2236
D_mem~2237
D_mem~2238
OUT0
[14,115]
@OUT06894,OUT06878,OUT06862
[1,9-119]
@OUT06880,OUT06864,OUT06848
[5,8-119]
@OUT06892,OUT06866,OUT06850
[5,8-119]
@OUT06894,OUT06868,OUT06852
[5,8-119]
@OUT06896,OUT06870,OUT06854
[1,8-119]
@OUT06888,OUT06872,OUT06856
[5,8-119]
@OUT06890,OUT06874,OUT06858
[1,9-119]
@OUT06892,OUT06876,OUT06860
[1,9-119]
OUT[15..0]
[1,6,8-119]
OUT[255..0]
[1,8-119]
@OUT21,OUT20,OUT19,OUT18,OUT12
[1,3-4,7-119]
OUT0
[1-119]
OUT0
[1-119]

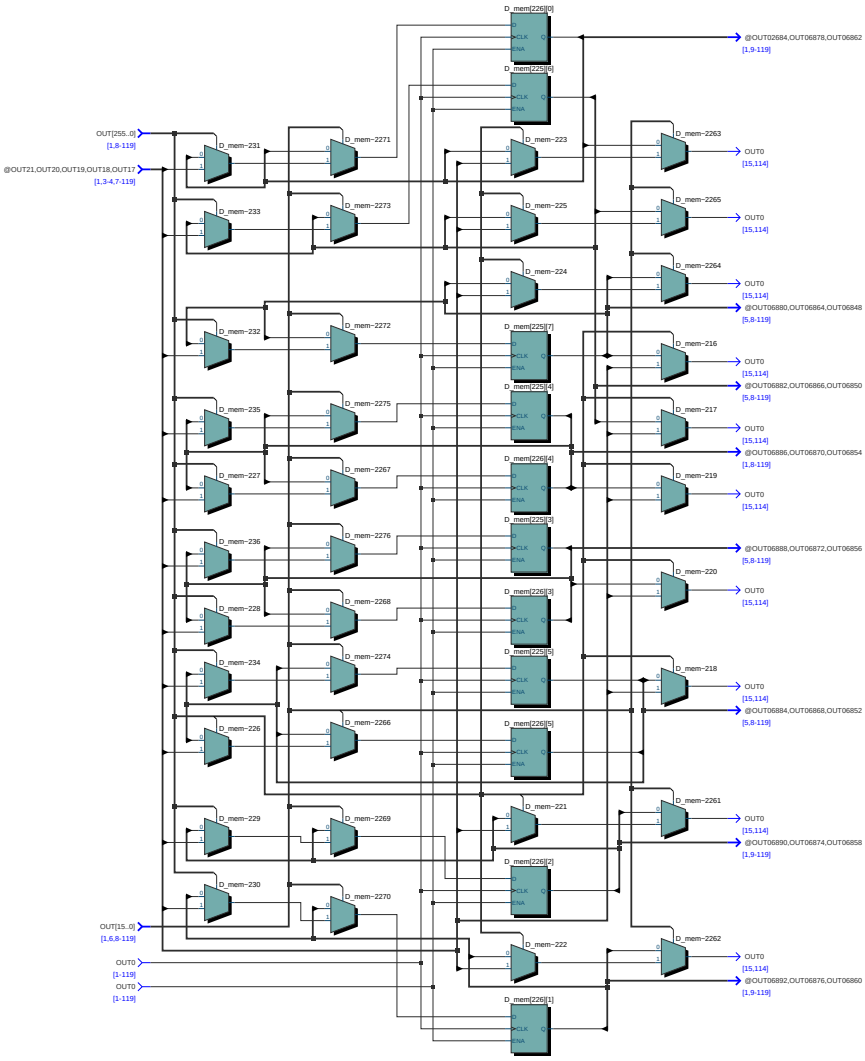
D_mem[226][0]
D_mem[225][6]
D_mem[225][7]
D_mem[225][4]
D_mem[226][4]
D_mem[225][3]
D_mem[226][3]
D_mem[225][5]
D_mem[226][5]
D_mem[226][2]
D_mem[226][1]
D_mem~231
D_mem~233
D_mem~232
D_mem~235
D_mem~227
D_mem~236
D_mem~228
D_mem~234
D_mem~226
D_mem~229
D_mem~230
D_mem~2271
D_mem~2273
D_mem~2272
D_mem~2275
D_mem~2267
D_mem~2276
D_mem~2268
D_mem~2274
D_mem~2266
D_mem~2269
D_mem~2270
D_mem~223
D_mem~225
D_mem~224
D_mem~221
D_mem~222
D_mem~2263
D_mem~2265
D_mem~2264
D_mem~216
D_mem~217
D_mem~219
D_mem~220
D_mem~218
D_mem~2261
D_mem~2262
OUT[255..0]
[1,8-119]
@OUT21,OUT20,OUT19,OUT18,OUT17
[1,3-4,7-119]
OUT[15..0]
[1,6,8-119]
OUT0
[1-119]
OUT0
[1-119]
@OUT02684,OUT06878,OUT06862
[1,9-119]
OUT0
[15,114]
OUT0
[15,114]
OUT0
[15,114]
@OUT06880,OUT06864,OUT06848
[5,8-119]
OUT0
[15,114]
@OUT06882,OUT06866,OUT06850
[5,8-119]
OUT0
[15,114]
@OUT06886,OUT06870,OUT06854
[1,8-119]
OUT0
[15,114]
@OUT06888,OUT06872,OUT06856
[5,8-119]
OUT0
[15,114]
OUT0
[15,114]
@OUT06884,OUT06868,OUT06852
[5,8-119]
OUT0
[15,114]
@OUT06890,OUT06874,OUT06858
[1,9-119]
OUT0
[15,114]
@OUT06892,OUT06876,OUT06860
[1,9-119]

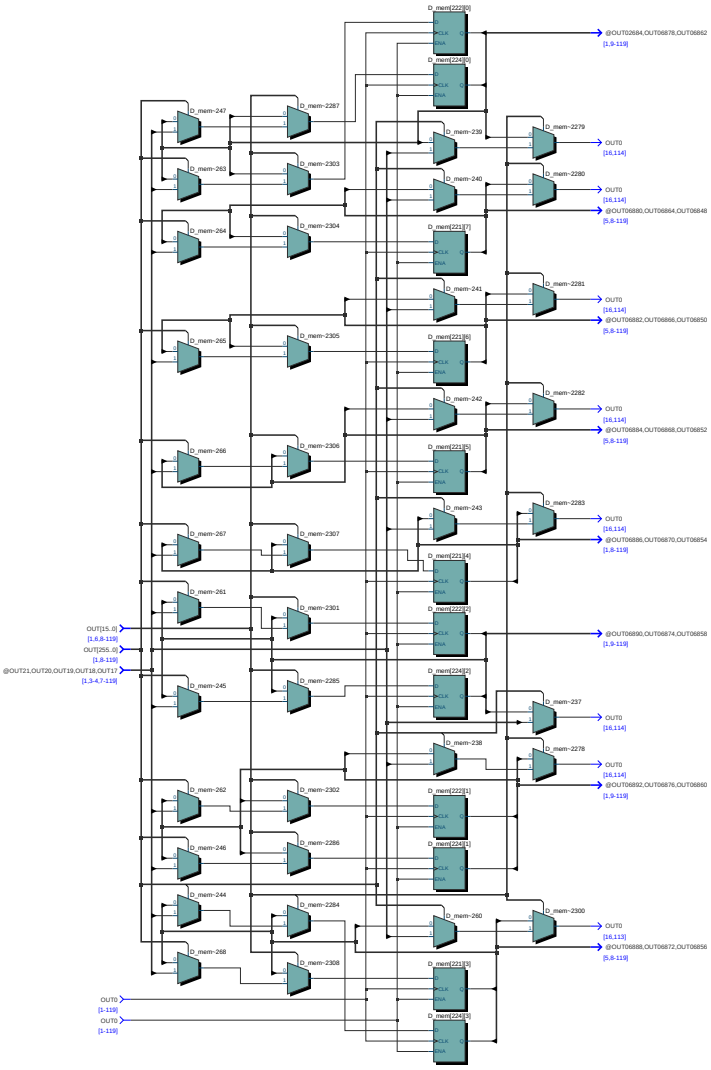
D_mem[222][0]
D_mem[224][0]
D_mem-247
D_mem-2287
D_mem-239
D_mem-2279
@OUT02684,OUT06878,OUT06862
[1,9-119]
D_mem-263
D_mem-2303
D_mem-240
D_mem-2280
OUT0
[16,114]
@OUT06880,OUT06864,OUT06848
[5,8-119]
D_mem-264
D_mem-2304
D_mem[221][7]
D_mem-241
D_mem-2281
@OUT06882,OUT06866,OUT06850
D_mem-265
D_mem-2305
D_mem[221][6]
D_mem-242
D_mem-2282
@OUT06884,OUT06868,OUT06852
D_mem-266
D_mem-2306
D_mem[221][5]
D_mem-243
D_mem-2283
@OUT06886,OUT06870,OUT06854
D_mem-267
D_mem-2307
D_mem[221][4]
D_mem-261
D_mem-2301
D_mem[222][2]
OUT[15..0]
[1,8-119]
OUT[255..0]
[1,8-119]
@OUT06890,OUT06874,OUT06858
@OUT21,OUT20,OUT19,OUT18,OUT17
[1,3-4,7-119]
D_mem-245
D_mem-2285
D_mem[224][2]
D_mem-237
D_mem-238
D_mem-2278
@OUT06892,OUT06876,OUT06860
D_mem-262
D_mem-2302
D_mem[222][1]
D_mem-246
D_mem-2286
D_mem[224][1]
D_mem-244
D_mem-2284
D_mem-260
D_mem-2300
@OUT06888,OUT06872,OUT06856
[5,8-119]
D_mem-268
D_mem-2308
D_mem[221][3]
D_mem[224][3]
OUT0
[1-119]

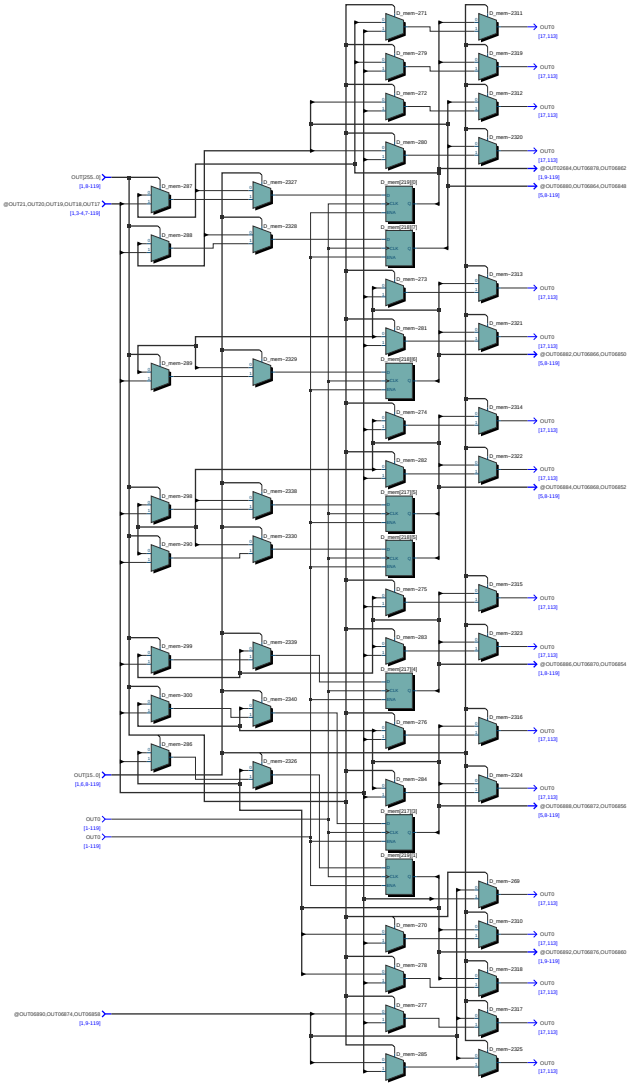
OUT[255..0]
[1,8-119]
@OUT21,OUT20,OUT19,OUT18,OUT17
[1,3-4,7-119]
OUT[15..0]
[1,6,8-119]
OUT0
[1-119]
OUT0
[1-119]
@OUT06890,OUT06874,OUT06858
[1,9-119]
D_mem~271
D_mem~279
D_mem~272
D_mem~280
D_mem~273
D_mem~281
D_mem~274
D_mem~282
D_mem~275
D_mem~283
D_mem~276
D_mem~284
D_mem~269
D_mem~270
D_mem~278
D_mem~277
D_mem~285
D_mem~2311
D_mem~2319
D_mem~2312
D_mem~2320
D_mem~2313
D_mem~2321
D_mem~2314
D_mem~2322
D_mem~2315
D_mem~2323
D_mem~2316
D_mem~2324
D_mem~2310
D_mem~2318
D_mem~2317
D_mem~2325
D_mem~287
D_mem~288
D_mem~289
D_mem~298
D_mem~299
D_mem~300
D_mem~286
D_mem~2327
D_mem~2328
D_mem~2329
D_mem~2338
D_mem~2330
D_mem~2339
D_mem~2340
D_mem~2326
OUT0
[17,112]
@OUT02684,OUT06878,OUT06862
[1,9-119]
@OUT06880,OUT06864,OUT06848
[5,8-119]
@OUT06882,OUT06866,OUT06850
[5,8-119]
@OUT06884,OUT06868,OUT06852
[5,8-119]
@OUT06886,OUT06870,OUT06854
[1,8-119]
@OUT06888,OUT06872,OUT06856
[5,8-119]
@OUT06892,OUT06876,OUT06860
[1,9-119]

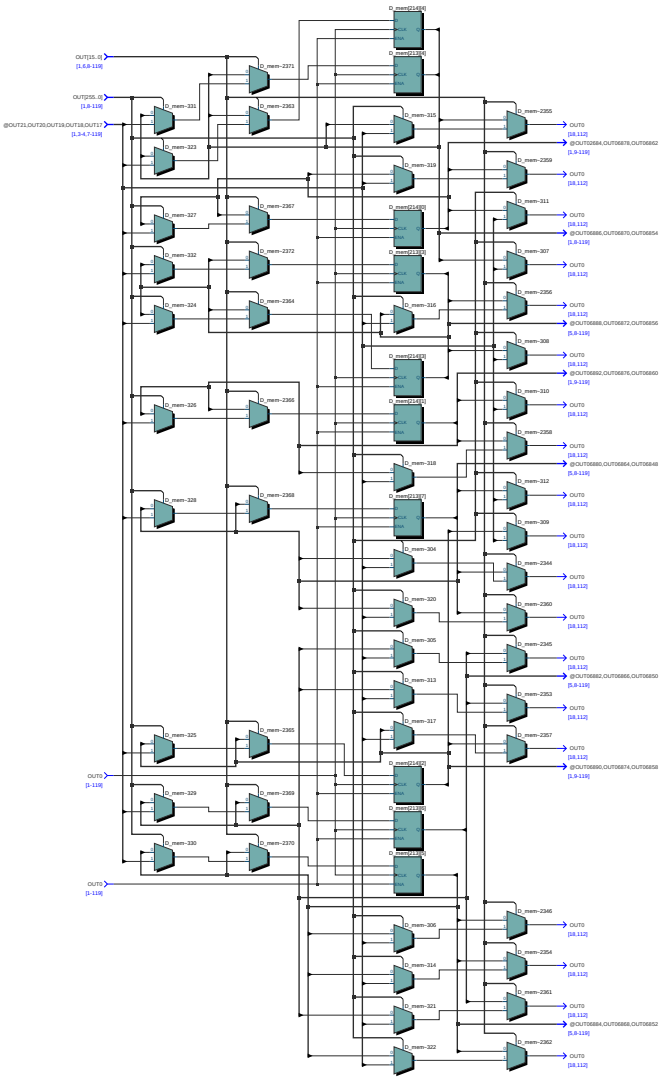
OUT[15..0]
[1,6,9-119]
OUT[255..0]
[1,8-119]
@OUT21,OUT20,OUT19,OUT18,OUT17
[1,3-4,7-119]
OUT0
[1-119]
OUT0
[1-119]
D_mem-331
D_mem-323
D_mem-327
D_mem-332
D_mem-324
D_mem-326
D_mem-328
D_mem-325
D_mem-329
D_mem-330
D_mem-2371
D_mem-2363
D_mem-2367
D_mem-2372
D_mem-2364
D_mem-2366
D_mem-2368
D_mem-2365
D_mem-2369
D_mem-2370
D_mem-2148[6]
D_mem-2138[6]
D_mem-315
D_mem-319
D_mem-2148[8]
D_mem-2138[8]
D_mem-316
D_mem-2148[9]
D_mem-2148[5]
D_mem-318
D_mem-2138[7]
D_mem-304
D_mem-320
D_mem-305
D_mem-313
D_mem-317
D_mem-2148[2]
D_mem-2138[3]
D_mem-2148[1]
D_mem-306
D_mem-314
D_mem-321
D_mem-322
D_mem-2355
OUT0
[18,112]
@OUT02684,OUT06878,OUT06862
[1,9-119]
D_mem-2359
OUT0
[18,112]
D_mem-311
OUT0
[18,112]
@OUT06886,OUT06870,OUT06854
[1,8-119]
D_mem-307
OUT0
[18,112]
D_mem-2356
OUT0
[18,112]
@OUT06888,OUT06872,OUT06856
[5,9-119]
D_mem-308
OUT0
[18,112]
@OUT06892,OUT06876,OUT06860
[1,9-119]
D_mem-310
OUT0
[18,112]
D_mem-2358
OUT0
[18,112]
@OUT06880,OUT06864,OUT06848
[5,9-119]
D_mem-312
OUT0
[18,112]
D_mem-309
OUT0
[18,112]
D_mem-2344
OUT0
[18,112]
D_mem-2360
OUT0
[18,112]
D_mem-2345
OUT0
[18,112]
@OUT06882,OUT06866,OUT06850
[5,9-119]
D_mem-2353
OUT0
[18,112]
D_mem-2357
OUT0
[18,112]
@OUT06890,OUT06874,OUT06858
[1,9-119]
D_mem-2346
OUT0
[18,112]
D_mem-2354
OUT0
[18,112]
D_mem-2361
OUT0
[18,112]
@OUT06884,OUT06868,OUT06852
[5,9-119]
D_mem-2362
OUT0
[18,112]

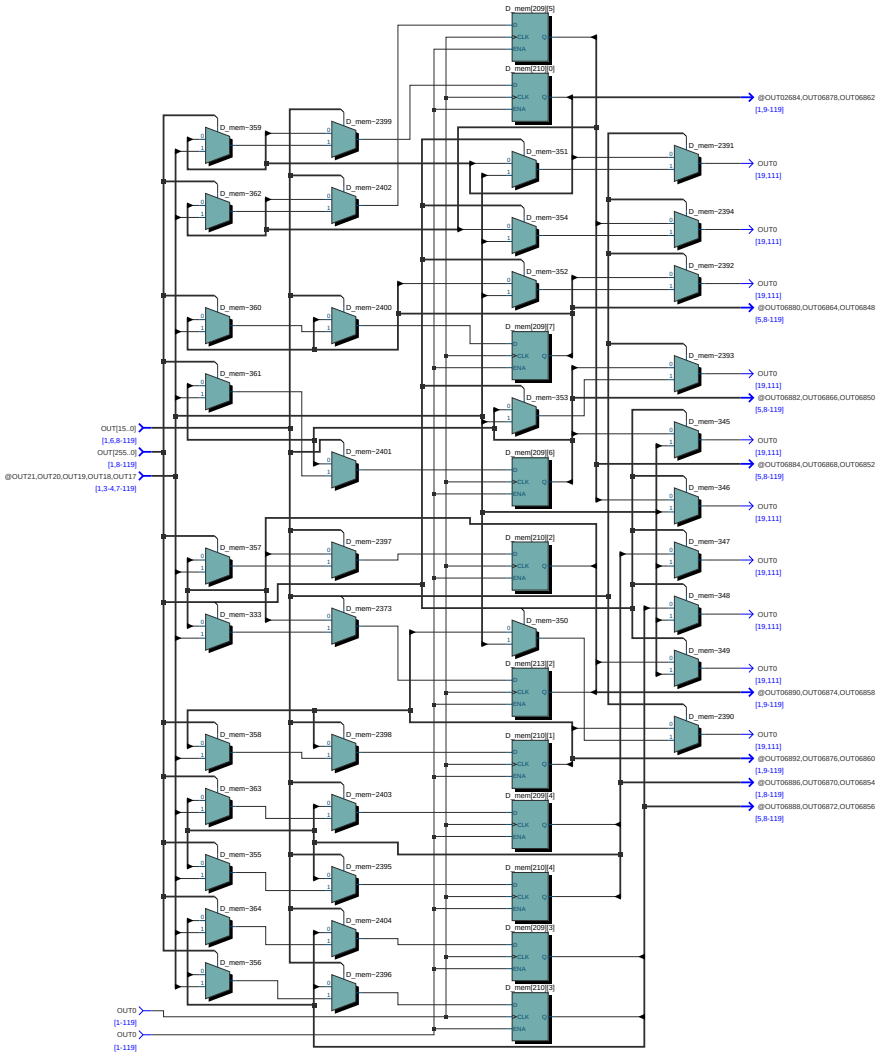
D_mem[209][5]
D_mem[210][9]
@OUT02684,OUT06878,OUT06862
[1,9-119]
D_mem-359
D_mem-2399
D_mem-351
D_mem-2391
OUT0
[19,111]
D_mem-362
D_mem-2402
D_mem-354
D_mem-2394
OUT0
[19,111]
D_mem-352
D_mem-2392
OUT0
[19,111]
@OUT06880,OUT06864,OUT06848
[5,8-119]
D_mem-360
D_mem-2400
D_mem[209][7]
D_mem-2393
OUT0
[19,111]
@OUT06882,OUT06866,OUT06850
[5,8-119]
D_mem-361
D_mem-353
D_mem-345
OUT0
[19,111]
@OUT06884,OUT06868,OUT06852
[5,8-119]
OUT[15..0]
[1,6,8-119]
OUT[255..0]
[1,8-119]
@OUT21,OUT20,OUT19,OUT18,OUT17
[1,3-4,7-119]
D_mem-2401
D_mem[209][6]
D_mem-346
OUT0
[19,111]
D_mem-357
D_mem-2397
D_mem[210][2]
D_mem-347
OUT0
[19,111]
D_mem-333
D_mem-2373
D_mem-350
D_mem-348
OUT0
[19,111]
D_mem[213][2]
D_mem-349
OUT0
[19,111]
@OUT06890,OUT06874,OUT06858
[1,9-119]
D_mem-358
D_mem-2398
D_mem[210][1]
D_mem-2390
OUT0
[19,111]
@OUT06892,OUT06876,OUT06860
[1,9-119]
@OUT06886,OUT06870,OUT06854
[1,8-119]
@OUT06888,OUT06872,OUT06856
[5,8-119]
D_mem-363
D_mem-2403
D_mem[209][4]
D_mem-355
D_mem-2395
D_mem[210][4]
D_mem-364
D_mem-2404
D_mem[209][3]
D_mem-356
D_mem-2396
D_mem[210][3]
OUT0
[1-119]
OUT0
[1-119]

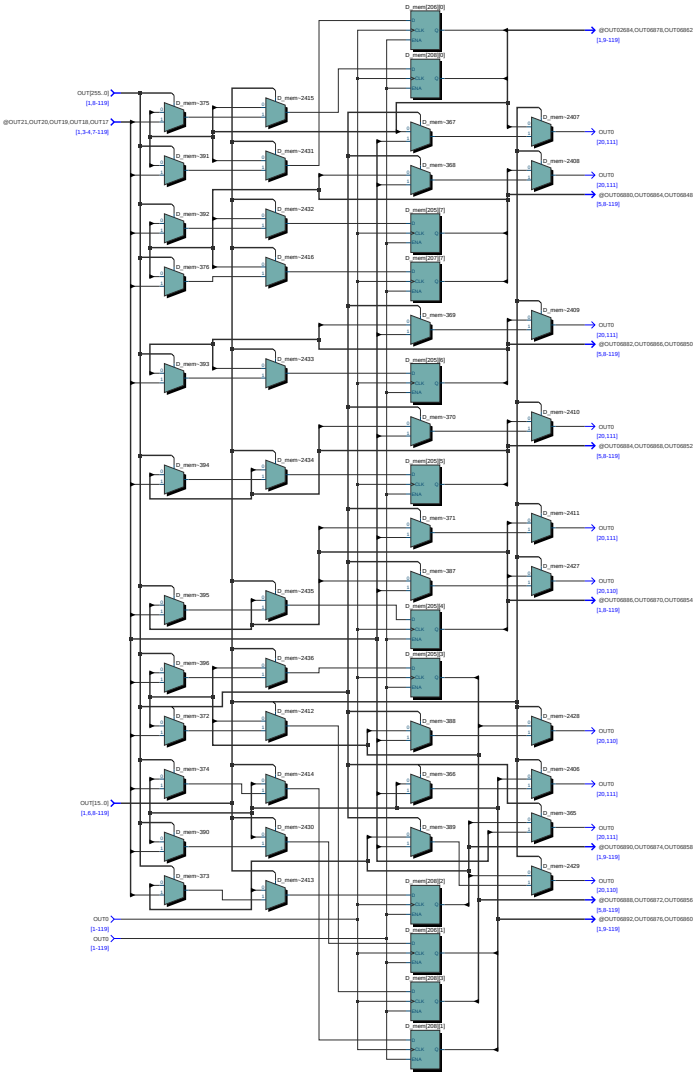
OUT[255..0]
[1,8-119]
@OUT21,OUT20,OUT19,OUT18,OUT17
[1,3-4,7-119]
OUT[15..0]
[1,6,8-119]
OUT0
[1-119]
OUT0
[1-119]
D_mem-375
D_mem-381
D_mem-382
D_mem-376
D_mem-383
D_mem-384
D_mem-385
D_mem-386
D_mem-372
D_mem-374
D_mem-380
D_mem-373
D_mem-2415
D_mem-2431
D_mem-2432
D_mem-2416
D_mem-2433
D_mem-2434
D_mem-2435
D_mem-2436
D_mem-2412
D_mem-2414
D_mem-2430
D_mem-2413
D_mem[2069]
D_mem[2063]
D_mem-367
D_mem-368
D_mem[2067]
D_mem[2077]
D_mem-369
D_mem[2068]
D_mem-370
D_mem[2065]
D_mem-371
D_mem-387
D_mem[2064]
D_mem[2073]
D_mem-388
D_mem-366
D_mem-389
D_mem[2062]
D_mem[2061]
D_mem[2083]
D_mem[2081]
D_mem-2407
D_mem-2408
D_mem-2409
D_mem-2410
D_mem-2411
D_mem-2427
D_mem-2428
D_mem-2406
D_mem-365
D_mem-2429
@OUT02694,OUT06878,OUT06862
[1,9-119]
OUT0
[20,111]
OUT0
[20,111]
@OUT06890,OUT06864,OUT06848
[5,8-119]
OUT0
[20,111]
@OUT06892,OUT06866,OUT06850
[5,8-119]
OUT0
[20,111]
@OUT06894,OUT06868,OUT06852
[5,8-119]
OUT0
[20,111]
OUT0
[20,110]
@OUT06896,OUT06870,OUT06854
[1,8-119]
OUT0
[20,110]
OUT0
[20,111]
OUT0
[20,111]
@OUT06890,OUT06874,OUT06858
[1,9-119]
OUT0
[20,110]
@OUT06888,OUT06872,OUT06856
[5,8-119]
@OUT06892,OUT06876,OUT06860
[1,9-119]

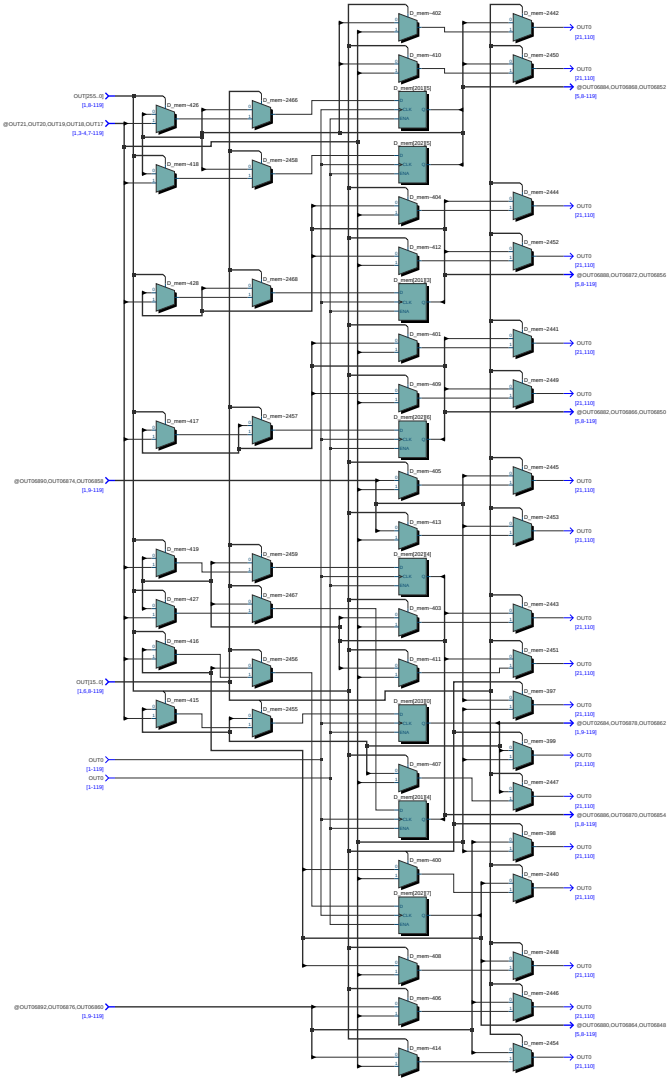
OUT[255..0]
[1,8-119]
@OUT21,OUT20,OUT19,OUT18,OUT17
[1,3-4,7-119]
@OUT06890,OUT06874,OUT06858
[1,9-119]
OUT[15..0]
[1,6,8-119]
OUT0
[1-119]
OUT0
[1-119]
@OUT06892,OUT06876,OUT06860
[1,9-119]
D_mem-436
D_mem-418
D_mem-428
D_mem-417
D_mem-419
D_mem-427
D_mem-416
D_mem-415
D_mem-2466
D_mem-2458
D_mem-2468
D_mem-2457
D_mem-2459
D_mem-2467
D_mem-2456
D_mem-2455
D_mem-402
D_mem-410
D_mem-2018[0]
D_mem[2023]
D_mem-404
D_mem-412
D_mem[2013]
D_mem-401
D_mem-409
D_mem[2023]
D_mem-405
D_mem-413
D_mem[2024]
D_mem-403
D_mem-411
D_mem[2023]
D_mem-407
D_mem[2014]
D_mem-400
D_mem[2027]
D_mem-408
D_mem-406
D_mem-414
D_mem-2442
D_mem-2450
D_mem-2444
D_mem-2452
D_mem-2441
D_mem-2449
D_mem-2445
D_mem-2453
D_mem-2443
D_mem-2451
D_mem-397
D_mem-399
D_mem-2447
D_mem-398
D_mem-2440
D_mem-2448
D_mem-2446
D_mem-2454
CLK
DIN
OUT0
[21,110]
@OUT06894,OUT06868,OUT06852
[5,8-119]
@OUT06888,OUT06872,OUT06856
[5,8-119]
@OUT06882,OUT06866,OUT06850
[1,8-119]
@OUT02594,OUT06878,OUT06862
[1,9-119]
@OUT06896,OUT06870,OUT06854
[1,8-119]
@OUT06890,OUT06864,OUT06848
[5,8-119]

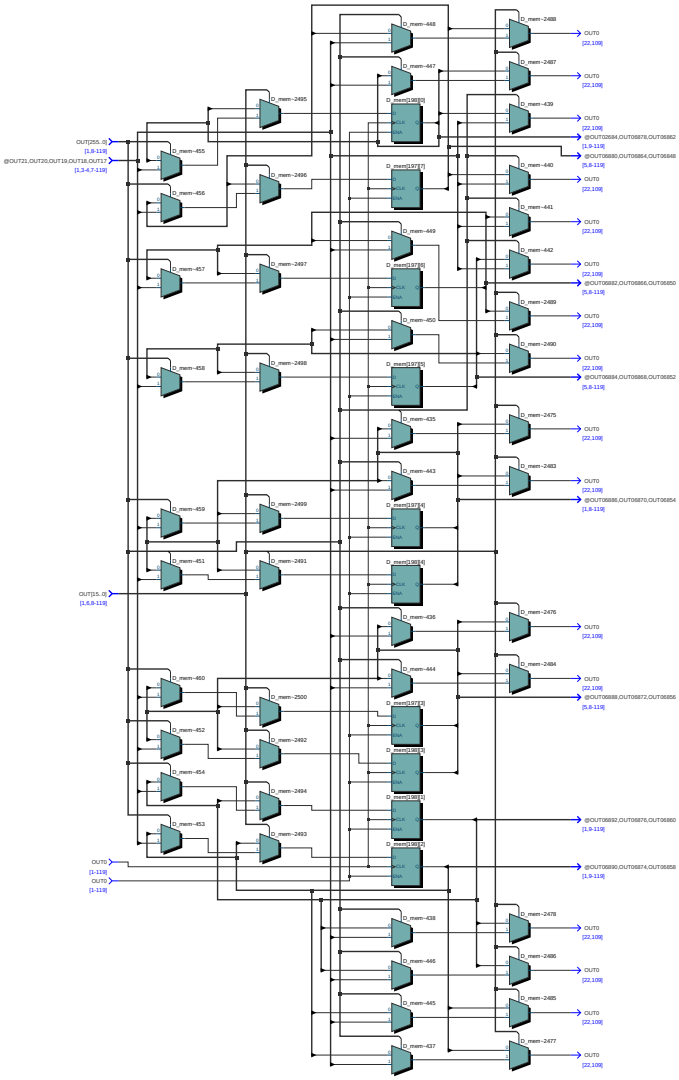
OUT[255..0]
[1,8-119]
@OUT21,OUT20,OUT19,OUT18,OUT17
[1,3-4,7-119]
OUT[15..0]
[1,6,8-119]
OUT0
[1-119]
OUT0
[1-119]
D_mem-448
D_mem-447
D_mem[198][0]
D_mem[197][7]
D_mem-449
D_mem[197][6]
D_mem-450
D_mem[197][5]
D_mem-435
D_mem-443
D_mem[197][4]
D_mem[198][4]
D_mem-436
D_mem-444
D_mem[197][3]
D_mem[198][3]
D_mem[198][1]
D_mem[198][2]
D_mem-438
D_mem-446
D_mem-445
D_mem-437
D_mem-2488
D_mem-2487
D_mem-439
D_mem-440
D_mem-441
D_mem-442
D_mem-2489
D_mem-2490
D_mem-2475
D_mem-2483
D_mem-2476
D_mem-2484
D_mem-2478
D_mem-2486
D_mem-2485
D_mem-2477
D_mem-2495
D_mem-2496
D_mem-2497
D_mem-2498
D_mem-2499
D_mem-2491
D_mem-2500
D_mem-2492
D_mem-2494
D_mem-2493
D_mem-455
D_mem-456
D_mem-457
D_mem-458
D_mem-459
D_mem-451
D_mem-460
D_mem-452
D_mem-454
D_mem-453
OUT0
[22,109]
@OUT02684,OUT06878,OUT06862
[1,9-119]
@OUT06880,OUT06854,OUT06848
[5,8-119]
@OUT06882,OUT06866,OUT06850
[5,8-119]
@OUT06884,OUT06868,OUT06852
[5,8-119]
@OUT06886,OUT06870,OUT06854
[1,8-119]
@OUT06888,OUT06872,OUT06856
[5,8-119]
@OUT06892,OUT06876,OUT06860
[1,9-119]
@OUT06890,OUT06874,OUT06858
[1,9-119]

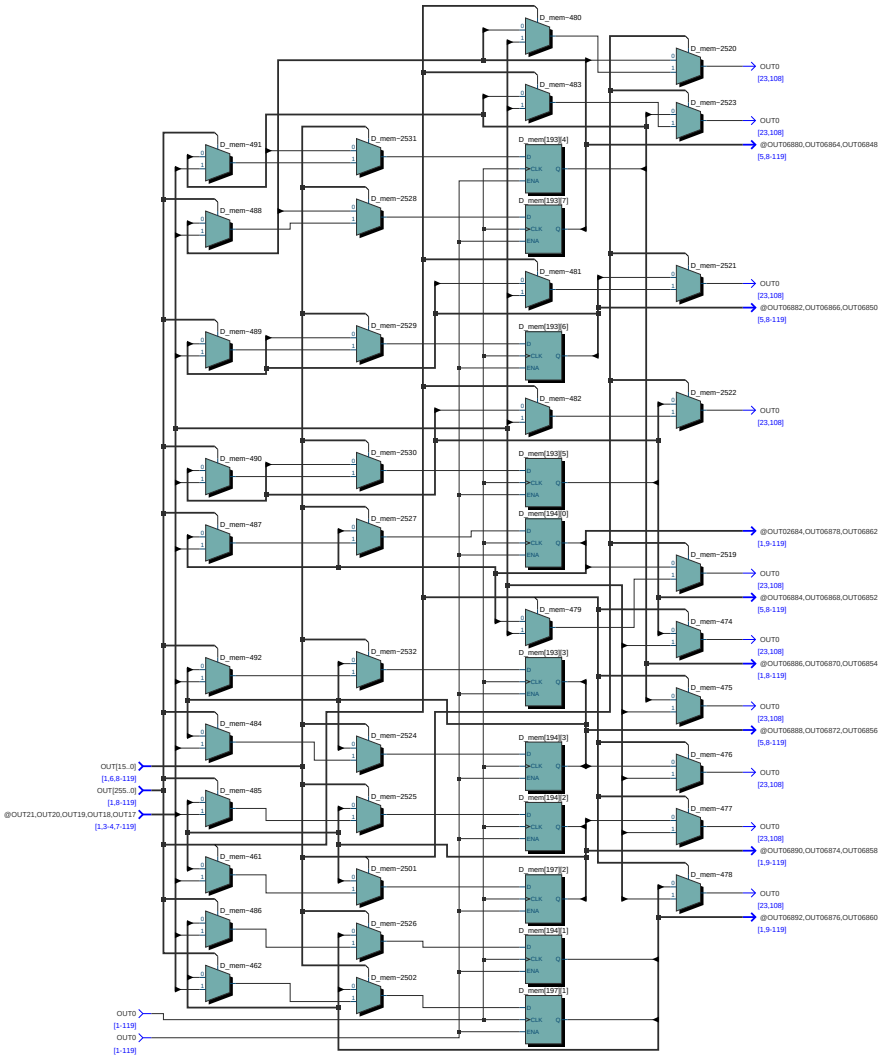
D_mem~480
D_mem~2520
OUT0
[23,108]
D_mem~483
D_mem~2523
OUT0
[23,108]
@OUT06880,OUT06864,OUT06848
[5,8-119]
D_mem~491
D_mem~2531
D_mem{193}[4]
D_mem~488
D_mem~2528
D_mem{193}[7]
D_mem~481
D_mem~2521
OUT0
[23,108]
@OUT06882,OUT06866,OUT06850
[5,8-119]
D_mem~489
D_mem~2529
D_mem{193}[6]
D_mem~482
D_mem~2522
OUT0
[23,108]
D_mem~490
D_mem~2530
D_mem{193}[5]
D_mem~487
D_mem~2527
D_mem{194}[0]
@OUT02684,OUT06878,OUT06862
[1,9-119]
D_mem~2519
OUT0
[23,108]
@OUT06884,OUT06868,OUT06852
[5,8-119]
D_mem~479
D_mem~474
OUT0
[23,108]
@OUT06886,OUT06870,OUT06854
[1,8-119]
D_mem~492
D_mem~2532
D_mem{193}[3]
D_mem~475
OUT0
[23,108]
@OUT06888,OUT06872,OUT06856
[5,8-119]
D_mem~484
D_mem~2524
D_mem{194}[3]
D_mem~476
OUT0
[23,108]
OUT[15..0]
[1,6,8-119]
OUT[255..0]
[1,8-119]
@OUT21,OUT20,OUT19,OUT18,OUT17
[1,3-4,7-119]
D_mem~485
D_mem~2525
D_mem{194}[2]
D_mem~477
OUT0
[23,108]
@OUT06890,OUT06874,OUT06858
[1,9-119]
D_mem~461
D_mem~2501
D_mem{197}[2]
D_mem~478
OUT0
[23,108]
@OUT06892,OUT06876,OUT06860
[1,9-119]
D_mem~486
D_mem~2526
D_mem{194}[1]
D_mem~462
D_mem~2502
D_mem{197}[1]
OUT0
[1-119]
OUT0
[1-119]

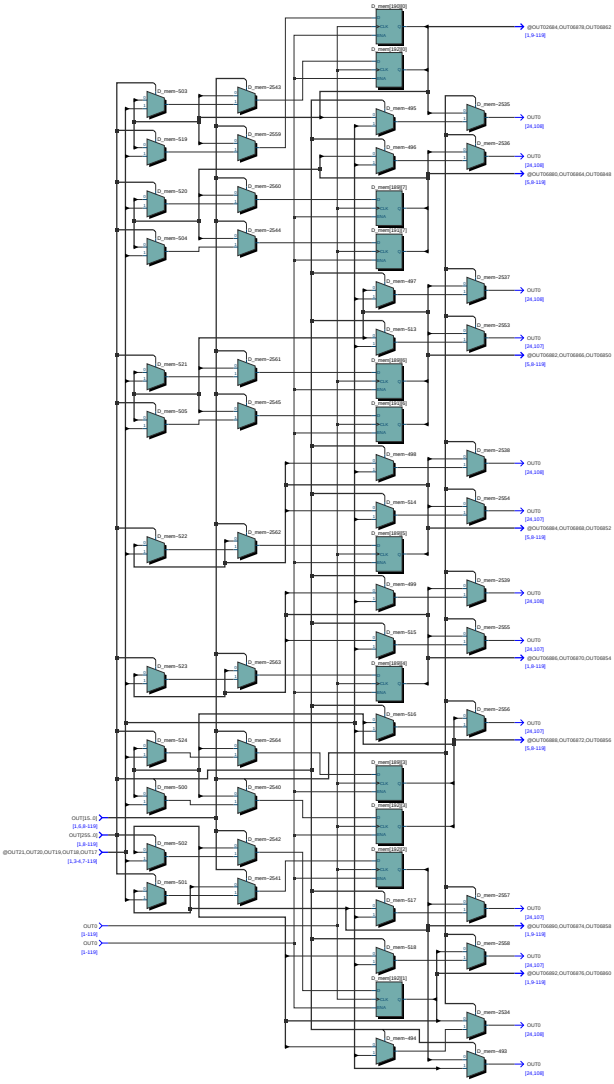
D_mem[162][0]
@OUT02684,OUT06678,OUT06842
[1,9-11]
D_mem[162][3]
D_mem–503
D_mem–2543
D_mem–495
D_mem–2535
OUT0
[24,108]
D_mem–519
D_mem–2559
D_mem–496
D_mem–2536
OUT0
[24,108]
@OUT06680,OUT06684,OUT06848
[1,9-11]
D_mem–520
D_mem–2560
D_mem[160][7]
D_mem–504
D_mem–2544
D_mem[161][7]
D_mem–497
D_mem–2537
OUT0
[24,108]
D_mem–513
D_mem–2553
OUT0
[24,107]
@OUT06682,OUT06686,OUT06850
[1,9-11]
D_mem–521
D_mem–2561
D_mem[160][6]
D_mem–505
D_mem–2545
D_mem[161][6]
D_mem–498
D_mem–2538
OUT0
[24,108]
D_mem–514
D_mem–2554
OUT0
[24,107]
@OUT06684,OUT06688,OUT06852
[1,9-11]
D_mem[160][5]
D_mem–522
D_mem–2562
D_mem–499
D_mem–2539
OUT0
[24,108]
D_mem–515
D_mem–2555
OUT0
[24,107]
@OUT06686,OUT06670,OUT06854
[1,9-11]
D_mem[160][4]
D_mem–523
D_mem–2563
D_mem–516
D_mem–2556
OUT0
[24,107]
@OUT06688,OUT06672,OUT06856
[1,9-11]
D_mem–524
D_mem–2564
D_mem[160][3]
D_mem–500
D_mem–2540
D_mem[162][2]
OUT[15..0]
[1,8-11]
OUT[255..0]
[1,8-11]
@OUT21,OUT20,OUT19,OUT18,OUT17
[1,3-4,7-11]
D_mem–502
D_mem–2542
D_mem[162][1]
D_mem–501
D_mem–2541
D_mem–517
D_mem–2557
OUT0
[24,107]
@OUT06690,OUT06674,OUT06858
[1,9-11]
OUT2
[1-11]
OUT0
[1-11]
D_mem–518
D_mem–2558
OUT0
[24,107]
@OUT06692,OUT06676,OUT06860
[1,9-11]
D_mem[160][1]
D_mem–2534
OUT0
[24,108]
D_mem–494
D_mem–492
OUT0
[24,108]

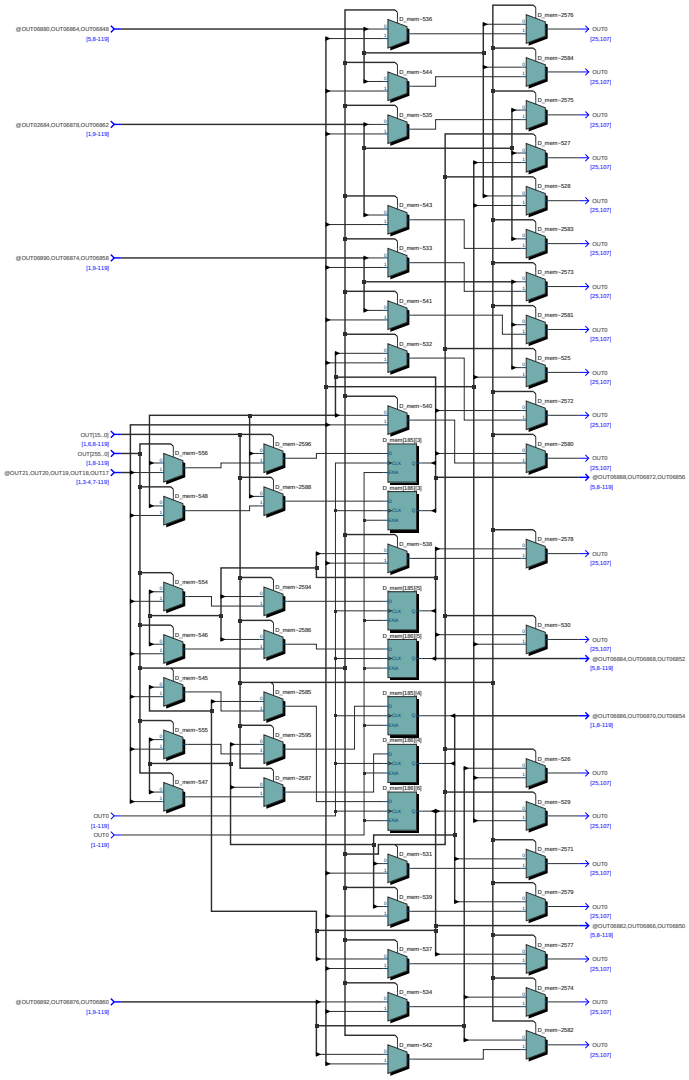
@OUT06880,OUT06864,OUT06848
[5,8-119]
@OUT02684,OUT06878,OUT06862
[1,9-119]
@OUT06890,OUT06874,OUT06858
[1,9-119]
OUT[15..0]
[1,6,8-119]
OUT[255..0]
[1,8-119]
@OUT21,OUT20,OUT19,OUT18,OUT17
[1,3-4,7-119]
OUT0
[1-119]
OUT0
[1-119]
@OUT06892,OUT06876,OUT06860
[1,9-119]
D_mem-536
D_mem-544
D_mem-535
D_mem-543
D_mem-533
D_mem-541
D_mem-532
D_mem-540
D_mem-556
D_mem-596
D_mem-548
D_mem-588
D_mem-538
D_mem-554
D_mem-594
D_mem-546
D_mem-586
D_mem-545
D_mem-585
D_mem-555
D_mem-595
D_mem-547
D_mem-587
D_mem-531
D_mem-539
D_mem-537
D_mem-534
D_mem-542
D_mem-2576
D_mem-2584
D_mem-2575
D_mem-527
D_mem-528
D_mem-2583
D_mem-2573
D_mem-2581
D_mem-525
D_mem-2572
D_mem-2580
@OUT06888,OUT06872,OUT06856
[5,8-119]
D_mem-2578
D_mem-530
@OUT06886,OUT06870,OUT06854,OUT06838
[5,8-119]
@OUT06884,OUT06868,OUT06852
[5,8-119]
@OUT06882,OUT06866,OUT06850
[5,8-119]
D_mem-526
D_mem-529
D_mem-2571
D_mem-2579
D_mem-2577
D_mem-2574
D_mem-2582
OUT0
[25,107]

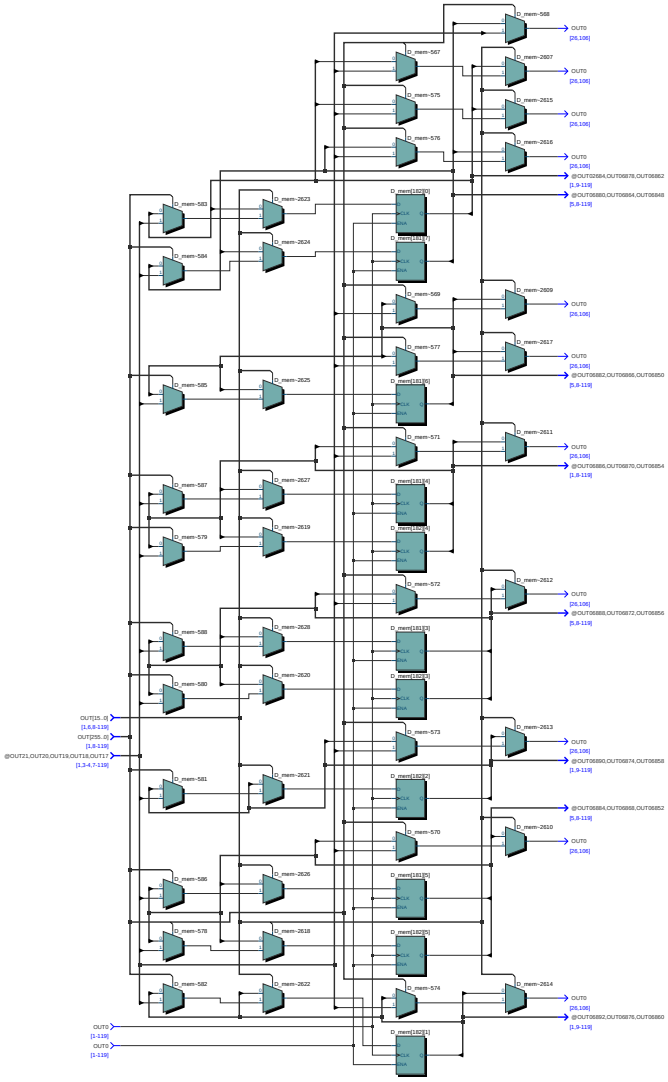
D_mem-568
CUT0
[26,106]
D_mem-567
D_mem-2607
CUT0
[26,106]
D_mem-575
D_mem-2615
CUT0
[26,106]
D_mem-576
D_mem-2616
CUT0
[26,106]
@OUT06864,OUT06878,OUT06862
[1,9-119]
@OUT06880,OUT06864,OUT06848
[5,8-119]
D_mem-583
D_mem-2623
D_mem[182][0]
D_mem-584
D_mem-2624
D_mem[181][7]
D_mem-569
D_mem-2609
CUT0
[26,106]
D_mem-577
D_mem-2617
CUT0
[26,106]
@OUT06882,OUT06866,OUT06850
[5,8-119]
D_mem-585
D_mem-2625
D_mem[181][6]
D_mem-571
D_mem-2611
CUT0
[26,106]
@OUT06886,OUT06870,OUT06854
[1,9-119]
D_mem-587
D_mem-2627
D_mem[181][4]
D_mem-579
D_mem-2619
D_mem[182][4]
D_mem-572
D_mem-2612
CUT0
[26,106]
@OUT06888,OUT06872,OUT06856
[5,8-119]
D_mem-588
D_mem-2628
D_mem[181][3]
D_mem-580
D_mem-2620
D_mem[182][3]
OUT[15..0]
[1,6,8-119]
OUT[255..0]
[1,8-119]
@OUT21,OUT20,OUT19,OUT18,OUT17
[1,3-4,7-119]
D_mem-573
D_mem-2613
CUT0
[26,106]
@OUT06890,OUT06874,OUT06858
[1,9-119]
D_mem-581
D_mem-2621
D_mem[182][2]
@OUT06884,OUT06868,OUT06852
[5,8-119]
D_mem-570
D_mem-2610
CUT0
[26,106]
D_mem-586
D_mem-2626
D_mem[181][5]
D_mem-578
D_mem-2618
D_mem[182][5]
D_mem-582
D_mem-2622
D_mem-574
D_mem-2614
CUT0
[26,106]
@OUT06892,OUT06876,OUT06860
[1,9-119]
CUT0
[1-119]
CUT0
[1-119]
D_mem[182][1]

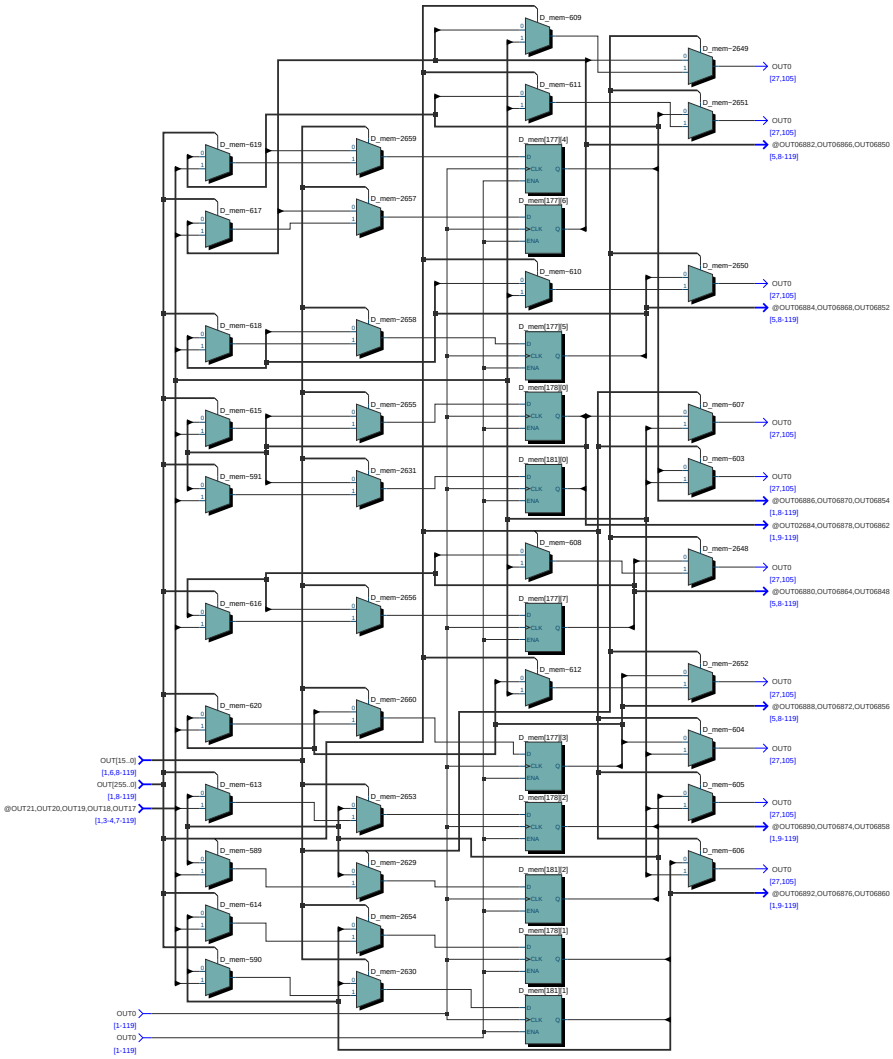
D_mem~609
D_mem~611
D_mem~619
D_mem~2659
D_mem~617
D_mem~2657
D_mem~610
D_mem~618
D_mem~2658
D_mem~615
D_mem~2655
D_mem~591
D_mem~2631
D_mem~608
D_mem~616
D_mem~2656
D_mem~612
D_mem~620
D_mem~2660
D_mem~613
D_mem~2653
D_mem~589
D_mem~2629
D_mem~614
D_mem~2654
D_mem~590
D_mem~2630
D_mem[177]4]
D_mem[177]6]
D_mem[177]5]
D_mem[178]0]
D_mem[181]0]
D_mem[177]7]
D_mem[177]3]
D_mem[178]2]
D_mem[181]2]
D_mem[178]1]
D_mem[181]1]
D_mem~2649
D_mem~2651
D_mem~2650
D_mem~607
D_mem~603
D_mem~2648
D_mem~2652
D_mem~604
D_mem~605
D_mem~606
OUT0
[27,105]
@OUT06882,OUT06866,OUT06850
[5,8-119]
@OUT06884,OUT06868,OUT06852
[5,8-119]
@OUT06886,OUT06870,OUT06854
[1,8-119]
@OUT02684,OUT06878,OUT06862
[1,9-119]
@OUT06880,OUT06864,OUT06848
[5,8-119]
@OUT06888,OUT06872,OUT06856
[5,8-119]
@OUT06890,OUT06874,OUT06858
[1,9-119]
@OUT06892,OUT06876,OUT06860
[1,9-119]
OUT[15..0]
[1,6,8-119]
OUT[255..0]
[1,9-119]
@OUT21,OUT20,OUT19,OUT18,OUT17
[1,3-4,7-119]
OUT0
[1-119]
OUT0
[1-119]

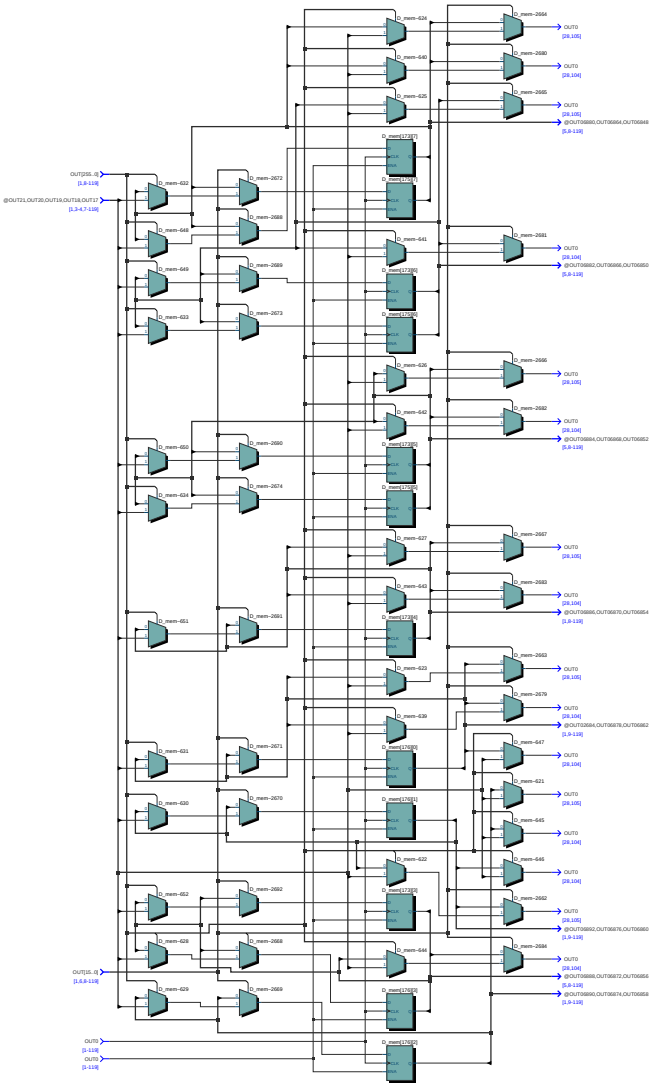
OUT[25..0]
[1,8-119]
@OUT21,OUT20,OUT19,OUT18,OUT17
[1,3-4,7-119]
OUT[15..0]
[1,6,8-119]
OUT0
[1-119]
OUT0
[1-119]
D_mem-624
D_mem-640
D_mem-625
D_mem[17287]
D_mem[17407]
D_mem-641
D_mem[17288]
D_mem[17408]
D_mem-626
D_mem-642
D_mem[17289]
D_mem[17409]
D_mem-627
D_mem-643
D_mem[17290]
D_mem-622
D_mem-639
D_mem[17269]
D_mem[17391]
D_mem-622
D_mem[17270]
D_mem-644
D_mem[17392]
D_mem-632
D_mem-649
D_mem-633
D_mem-650
D_mem-634
D_mem-651
D_mem-631
D_mem-630
D_mem-652
D_mem-628
D_mem-629
D_mem-2672
D_mem-2688
D_mem-2689
D_mem-2673
D_mem-2690
D_mem-2674
D_mem-2691
D_mem-2671
D_mem-2670
D_mem-2692
D_mem-2668
D_mem-2669
D_mem-2664
D_mem-2680
D_mem-2665
D_mem-2681
D_mem-2666
D_mem-2682
D_mem-2667
D_mem-2683
D_mem-2663
D_mem-2679
D_mem-647
D_mem-621
D_mem-645
D_mem-646
D_mem-2662
D_mem-2684
OUT0
[28,105]
OUT0
[28,104]
OUT0
[28,105]
@OUT06880,OUT06864,OUT06848
[1,8-119]
OUT0
[28,104]
@OUT06882,OUT06866,OUT06850
[1,8-119]
OUT0
[28,105]
OUT0
[28,104]
@OUT06884,OUT06868,OUT06852
[1,8-119]
OUT0
[28,105]
OUT0
[28,104]
@OUT06886,OUT06870,OUT06854
[1,8-119]
OUT0
[28,105]
OUT0
[28,104]
@OUT02684,OUT06878,OUT06862
[1,9-119]
OUT0
[28,104]
OUT0
[28,105]
OUT0
[28,104]
OUT0
[28,104]
OUT0
[28,105]
@OUT06892,OUT06876,OUT06860
[1,9-119]
OUT0
[28,104]
@OUT06888,OUT06872,OUT06856
[1,9-119]
@OUT06890,OUT06874,OUT06858
[1,9-119]

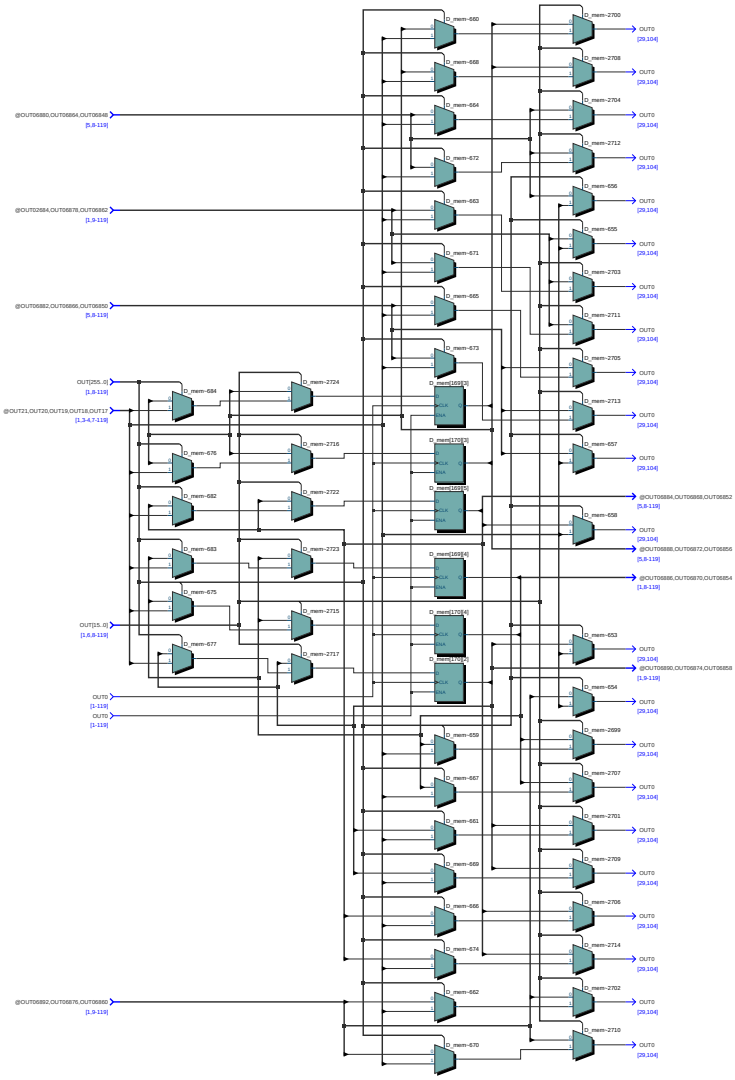
@OUT06880,OUT06894,OUT06548
[5,8-119]
@OUT02684,OUT06878,OUT06852
[1,9-119]
@OUT06882,OUT06896,OUT06850
[5,8-119]
OUT[55..0]
[1,8-119]
@OUT21,OUT20,OUT19,OUT18,OUT17
[1,3-4,7-118]
OUT[15..0]
[1,6,8-119]
OUT0
[1-119]
OUT0
[1-119]
@OUT06892,OUT06876,OUT06860
[1,9-119]
D_mem-684
D_mem-676
D_mem-682
D_mem-683
D_mem-675
D_mem-677
D_mem-2724
D_mem-2716
D_mem-2722
D_mem-2723
D_mem-2715
D_mem-2717
D_mem-660
D_mem-668
D_mem-664
D_mem-672
D_mem-663
D_mem-671
D_mem-665
D_mem-673
D_mem[169][3]
D_mem[170][3]
D_mem[169][5]
D_mem[169][4]
D_mem[170][4]
D_mem[170][5]
D_mem-659
D_mem-667
D_mem-661
D_mem-669
D_mem-666
D_mem-674
D_mem-662
D_mem-670
D_mem-2700
D_mem-2708
D_mem-2704
D_mem-2712
D_mem-656
D_mem-655
D_mem-2703
D_mem-2711
D_mem-2705
D_mem-2713
D_mem-657
D_mem-658
D_mem-653
D_mem-654
D_mem-2699
D_mem-2707
D_mem-2701
D_mem-2709
D_mem-2706
D_mem-2714
D_mem-2702
D_mem-2710
OUT0
[29,104]
@OUT06884,OUT06868,OUT06852
[5,8-119]
@OUT06888,OUT06872,OUT06856
[5,8-119]
@OUT06886,OUT06870,OUT06854
[1,8-119]
@OUT06890,OUT06874,OUT06858
[1,9-119]

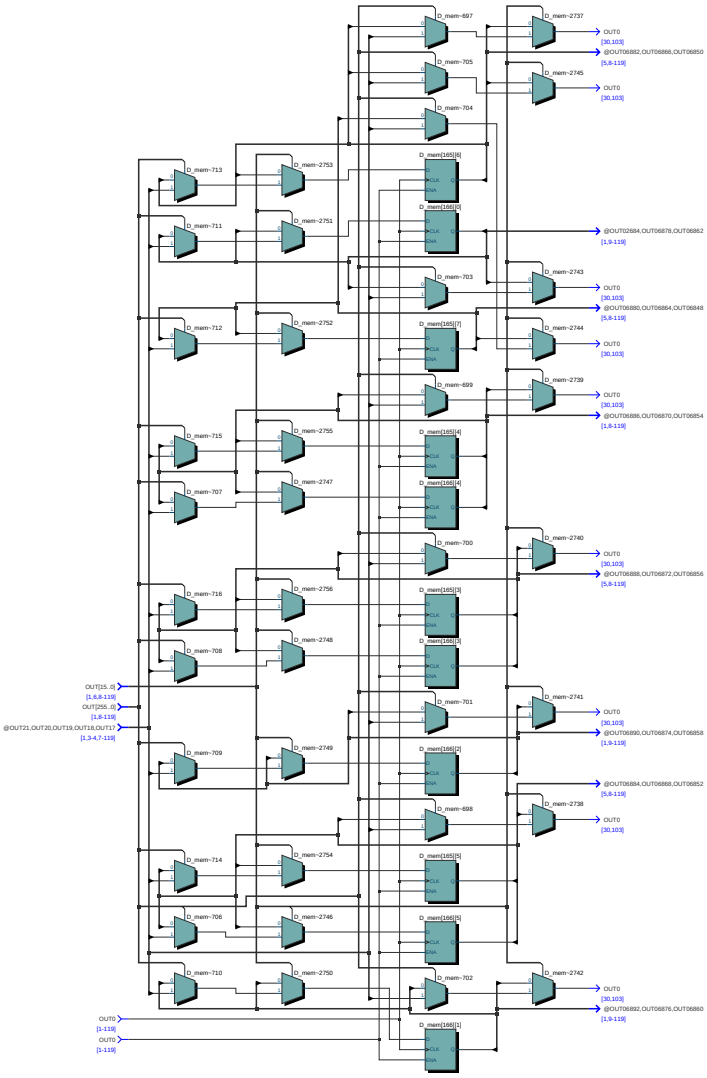
D_mem~697
D_mem~705
D_mem~704
D_mem~713
D_mem~711
D_mem~712
D_mem~703
D_mem~699
D_mem~715
D_mem~707
D_mem~700
D_mem~716
D_mem~708
D_mem~701
D_mem~709
D_mem~698
D_mem~714
D_mem~706
D_mem~702
D_mem~710
D_mem~2737
D_mem~2745
D_mem~2753
D_mem~2751
D_mem~2743
D_mem~2744
D_mem~2752
D_mem~2739
D_mem~2755
D_mem~2747
D_mem~2740
D_mem~2756
D_mem~2748
D_mem~2741
D_mem~2749
D_mem~2738
D_mem~2754
D_mem~2746
D_mem~2742
D_mem~2750
D_mem[165][6]
D_mem[166][6]
D_mem[165][7]
D_mem[165][4]
D_mem[166][4]
D_mem[165][3]
D_mem[166][3]
D_mem[166][2]
D_mem[165][5]
D_mem[166][5]
D_mem[166][1]
CLK
ENA
OUT0
[30,103]
@OUT06882,OUT06866,OUT06850
[5,8-119]
@OUT02684,OUT06878,OUT06862
[1,9-119]
@OUT06880,OUT06864,OUT06848
@OUT06886,OUT06870,OUT06854
[1,8-119]
@OUT06888,OUT06872,OUT06856
@OUT06890,OUT06874,OUT06858
@OUT06884,OUT06868,OUT06852
@OUT06892,OUT06876,OUT06860
OUT[15..0]
[1,6,8-119]
OUT[255..0]
[1,8-119]
@OUT21,OUT20,OUT19,OUT18,OUT17
[1,3-4,7-119]
OUT0
[1-119]
OUT0
[1-119]

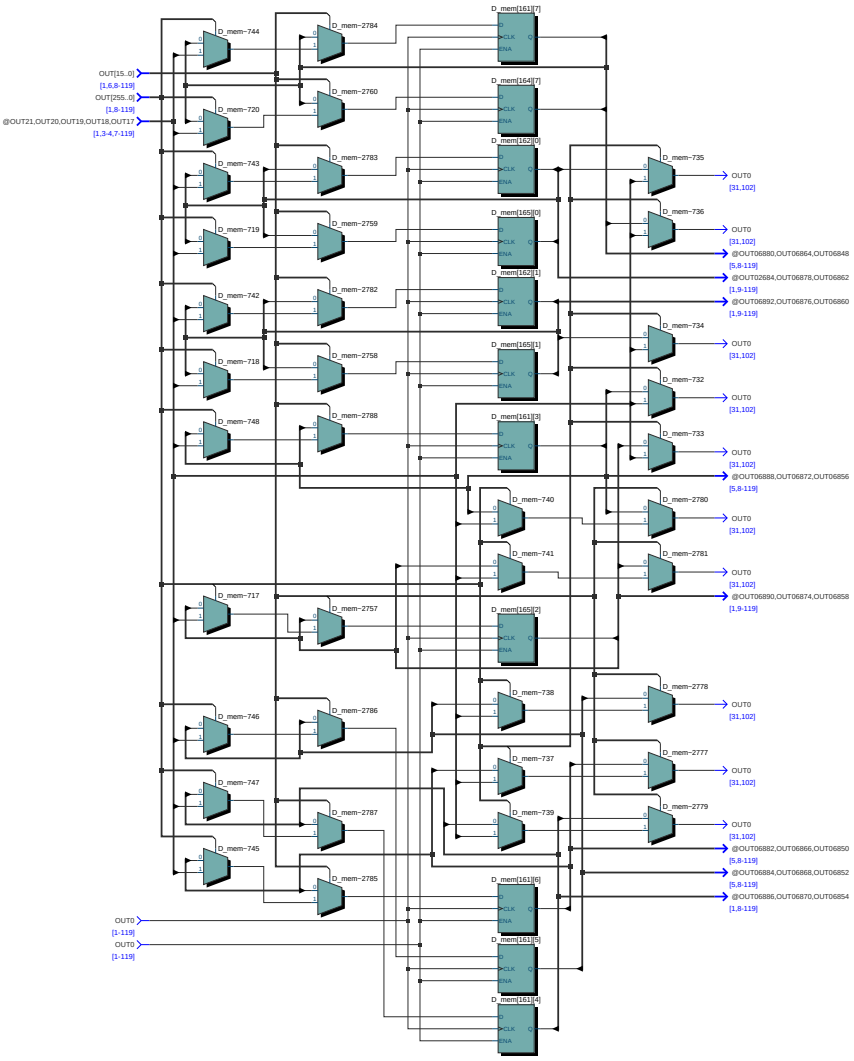
OUT[15..0]
[1,6,8-119]
OUT[255..0]
[1,8-119]
@OUT21,OUT20,OUT19,OUT18,OUT17
[1,3-4,7-119]
OUT0
[1-119]
OUT0
[1-119]
D_mem~744
D_mem~720
D_mem~743
D_mem~719
D_mem~742
D_mem~718
D_mem~748
D_mem~717
D_mem~746
D_mem~747
D_mem~745
D_mem~2784
D_mem~2760
D_mem~2783
D_mem~2759
D_mem~2782
D_mem~2758
D_mem~2788
D_mem~2757
D_mem~2786
D_mem~2787
D_mem~2785
D_mem[161][7]
D_mem[164][7]
D_mem[162][0]
D_mem[165][0]
D_mem[162][1]
D_mem[165][1]
D_mem[161][3]
D_mem[165][2]
D_mem[161][6]
D_mem[161][5]
D_mem[161][4]
D_mem~740
D_mem~741
D_mem~738
D_mem~737
D_mem~739
D_mem~735
D_mem~736
D_mem~734
D_mem~732
D_mem~733
D_mem~2780
D_mem~2781
D_mem~2778
D_mem~2777
D_mem~2779
OUT0
[31,102]
@OUT06880,OUT06864,OUT06848
[5,8-119]
@OUT02684,OUT06878,OUT06862
[1,9-119]
@OUT06892,OUT06876,OUT06860
[1,9-119]
@OUT06888,OUT06872,OUT06856
[5,8-119]
@OUT06890,OUT06874,OUT06858
[1,9-119]
@OUT06882,OUT06866,OUT06850
[5,8-119]
@OUT06884,OUT06868,OUT06852
[5,8-119]
@OUT06886,OUT06870,OUT06854
[1,8-119]

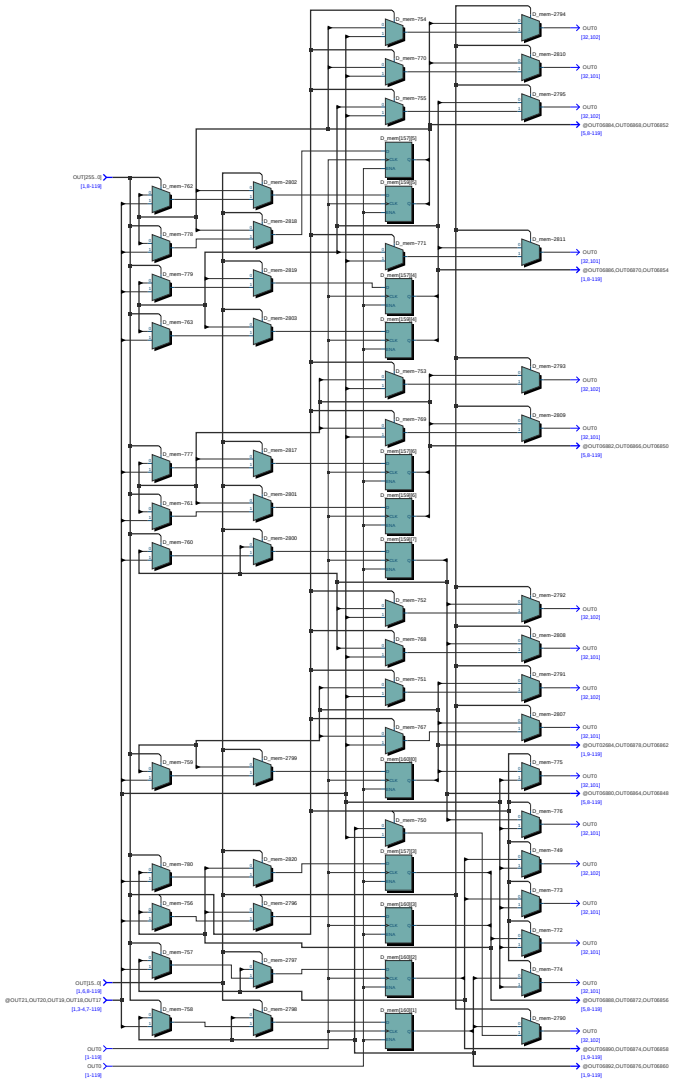
OUT[255..0]
[1,8-110]
OUT[15..0]
[1,6,8-110]
@OUT21,OUT20,OUT19,OUT18,OUT17
[1,3-4,7-110]
OUT0
[1-110]
OUT0
[1-110]
D_mem~754
D_mem~770
D_mem~755
D_mem~2794
D_mem~2810
D_mem~2795
D_mem~762
D_mem~2802
D_mem~2818
D_mem~778
D_mem~779
D_mem~2819
D_mem~763
D_mem~2803
D_mem~771
D_mem~2811
D_mem~753
D_mem~2793
D_mem~769
D_mem~2809
D_mem~777
D_mem~2817
D_mem~761
D_mem~2801
D_mem~760
D_mem~2800
D_mem~752
D_mem~2792
D_mem~768
D_mem~2808
D_mem~751
D_mem~2791
D_mem~767
D_mem~2807
D_mem~759
D_mem~2799
D_mem~775
D_mem~776
D_mem~750
D_mem~749
D_mem~780
D_mem~2830
D_mem~773
D_mem~756
D_mem~2796
D_mem~772
D_mem~757
D_mem~2797
D_mem~774
D_mem~758
D_mem~2798
D_mem~2790
OUT0
[32,102]
OUT0
[32,101]
@OUT06884,OUT06869,OUT06852
[5,8-110]
@OUT06886,OUT06870,OUT06854
[1,8-110]
@OUT06882,OUT06866,OUT06850
[5,8-110]
@OUT02884,OUT06878,OUT06862
[1,9-110]
@OUT06880,OUT06864,OUT06848
[5,8-110]
@OUT06888,OUT06872,OUT06856
[5,8-110]
@OUT06890,OUT06874,OUT06858
[1,9-110]
@OUT06892,OUT06876,OUT06860
[1,9-110]

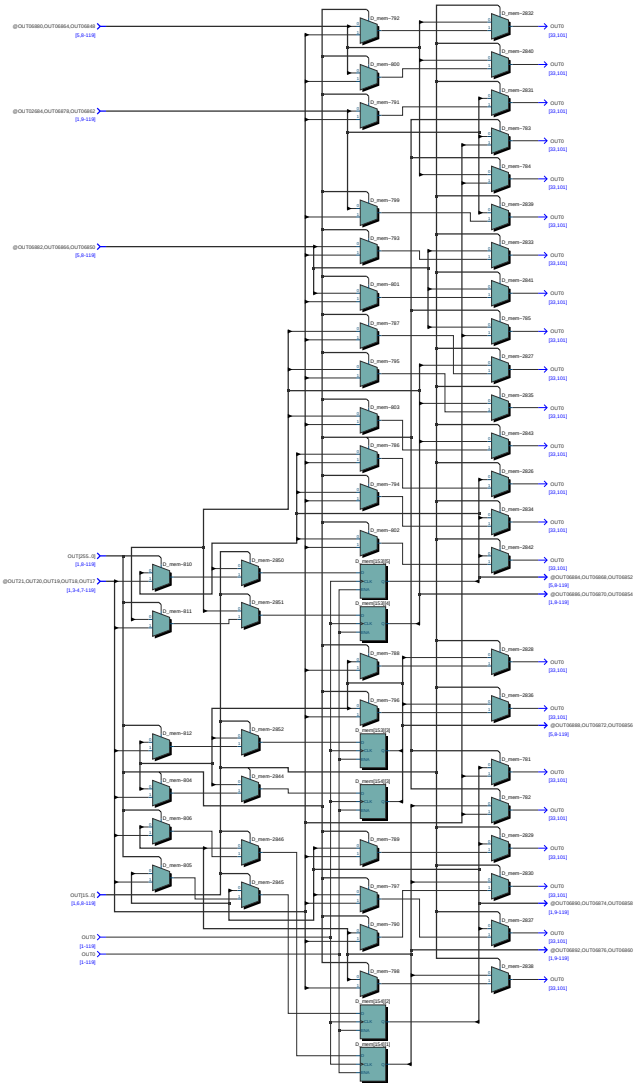
@OUT06880,OUT06884,OUT06849
[5,8-119]
@OUT02684,OUT06878,OUT06850
[1,9-119]
@OUT06882,OUT06865,OUT06855
[5,8-119]
OUT[255..0]
[5,8-119]
@OUT21,OUT20,OUT19,OUT18,OUT17
[1,3-4,7-119]
OUT[15..0]
[1,6,8-119]
OUT0
[1-119]
OUT0
[1-119]
D_mem-792
D_mem-800
D_mem-791
D_mem-799
D_mem-793
D_mem-801
D_mem-797
D_mem-795
D_mem-803
D_mem-796
D_mem-794
D_mem-802
D_mem-810
D_mem-811
D_mem-812
D_mem-804
D_mem-806
D_mem-805
D_mem-2850
D_mem-2851
D_mem-2852
D_mem-2864
D_mem-2846
D_mem-2845
D_mem[15:8][3]
D_mem[15:8][4]
D_mem-798
D_mem-796
D_mem[15:8][5]
D_mem[14][3]
D_mem-789
D_mem-797
D_mem-790
D_mem-788
D_mem[14][2]
D_mem[14][1]
D_mem-2632
D_mem-2640
D_mem-2631
D_mem-763
D_mem-764
D_mem-2639
D_mem-2633
D_mem-2641
D_mem-765
D_mem-2627
D_mem-2635
D_mem-2643
D_mem-2626
D_mem-2634
D_mem-2642
@OUT06884,OUT06868,OUT06852
[5,8-119]
@OUT06888,OUT06870,OUT06854
[1,8-119]
D_mem-2628
D_mem-2636
@OUT06888,OUT06872,OUT06856
[5,8-119]
D_mem-761
D_mem-762
D_mem-2629
D_mem-2630
@OUT06890,OUT06874,OUT06858
[1,9-119]
D_mem-2637
@OUT06892,OUT06876,OUT06860
[1,9-119]
D_mem-2638
OUT0
[33,101]

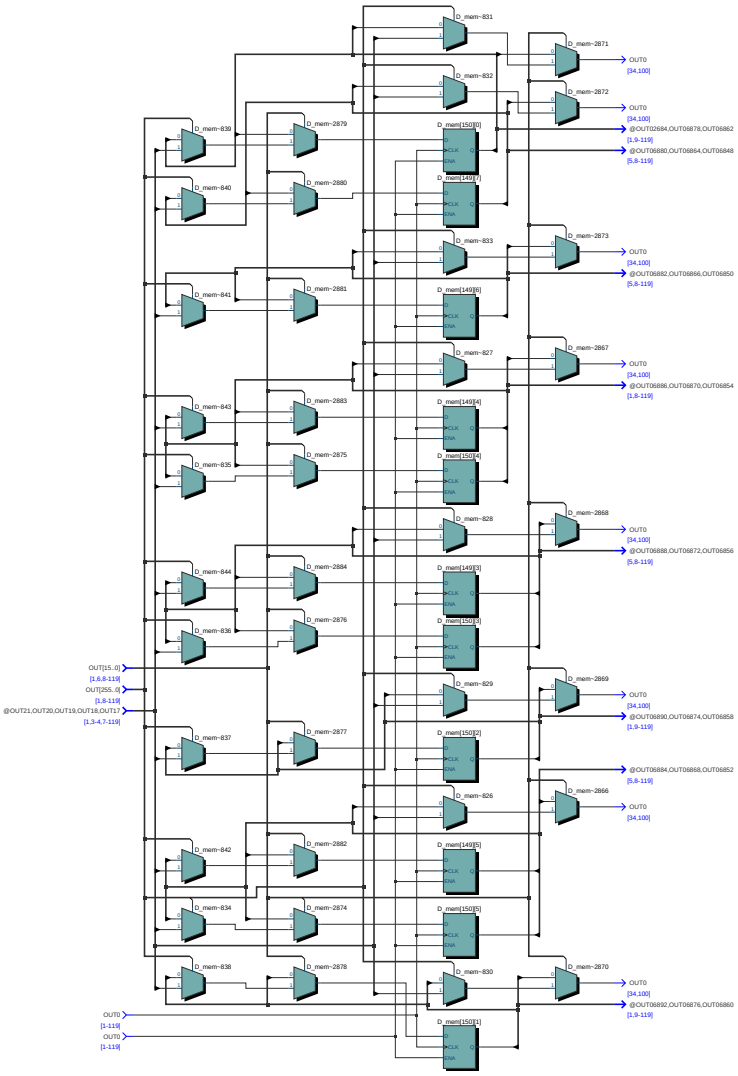
D_mem~831
D_mem~2871
OUT0
[34,100]
D_mem~832
D_mem~2872
OUT0
[34,100]
@OUT06884,OUT06878,OUT06862
[1,9-119]
@OUT06880,OUT06864,OUT06848
[5,8-119]
D_mem~839
D_mem~2879
D_mem[150][0]
D_mem~840
D_mem~2880
D_mem[149][7]
D_mem~833
D_mem~2873
OUT0
[34,100]
@OUT06882,OUT06866,OUT06850
[5,8-119]
D_mem~841
D_mem~2881
D_mem[149][6]
D_mem~827
D_mem~2867
OUT0
[34,100]
@OUT06886,OUT06870,OUT06854
[1,8-119]
D_mem~843
D_mem~2883
D_mem[149][4]
D_mem~835
D_mem~2875
D_mem[150][4]
D_mem~828
D_mem~2868
OUT0
[34,100]
@OUT06888,OUT06872,OUT06856
[5,8-119]
D_mem~844
D_mem~2884
D_mem[149][3]
D_mem~836
D_mem~2876
D_mem[150][3]
OUT[15..0]
[1,6,8-119]
OUT[255..0]
[1,8-119]
@OUT21,OUT20,OUT19,OUT18,OUT17
[1,3-4,7-119]
D_mem~829
D_mem~2869
OUT0
[34,100]
@OUT06890,OUT06874,OUT06858
[1,9-119]
D_mem~837
D_mem~2877
D_mem[150][2]
@OUT06884,OUT06868,OUT06852
[5,8-119]
D_mem~826
D_mem~2866
OUT0
[34,100]
D_mem~842
D_mem~2882
D_mem[149][5]
D_mem~834
D_mem~2874
D_mem[150][5]
D_mem~838
D_mem~2878
D_mem~830
D_mem~2870
OUT0
[34,100]
@OUT06892,OUT06876,OUT06860
[1,9-119]
OUT0
[1-119]
OUT0
[1-119]
D_mem[150][1]

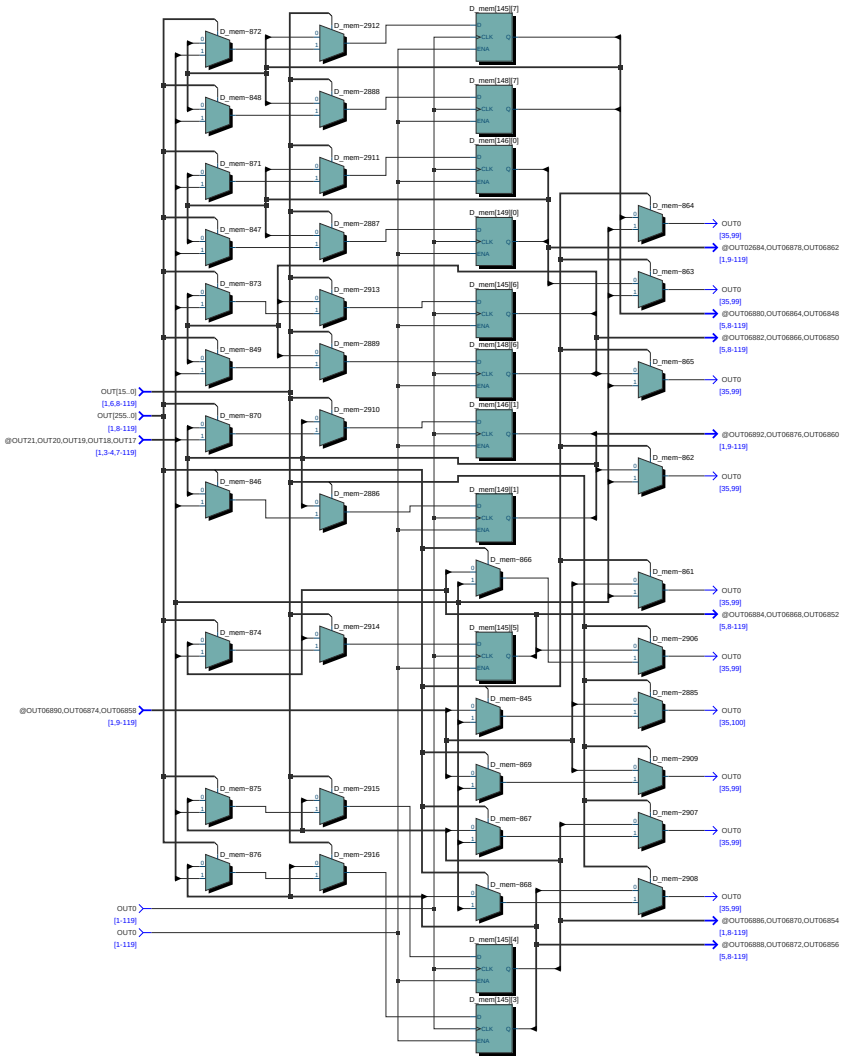
D_mem[145][7]
D_mem[148][7]
D_mem[146][0]
D_mem[149][0]
D_mem[145][6]
D_mem[148][6]
D_mem[146][1]
D_mem[149][1]
D_mem[145][5]
D_mem[145][4]
D_mem[145][3]
D_mem~872
D_mem~848
D_mem~871
D_mem~847
D_mem~873
D_mem~849
D_mem~870
D_mem~846
D_mem~874
D_mem~875
D_mem~876
D_mem~2912
D_mem~2888
D_mem~2911
D_mem~2887
D_mem~2913
D_mem~2889
D_mem~2910
D_mem~2886
D_mem~2914
D_mem~2915
D_mem~2916
D_mem~866
D_mem~845
D_mem~869
D_mem~867
D_mem~868
D_mem~864
D_mem~863
D_mem~865
D_mem~862
D_mem~861
D_mem~2906
D_mem~2885
D_mem~2909
D_mem~2907
D_mem~2908
OUT[15..0]
[1,6,8-119]
OUT[255..0]
[1,8-119]
@OUT21,OUT20,OUT19,OUT18,OUT17
[1,3-4,7-119]
@OUT06890,OUT06874,OUT06858
[1,9-119]
OUT0
[1-119]
OUT0
[1-119]
OUT0
[35,99]
@OUT02684,OUT06878,OUT06862
[1,9-119]
OUT0
[35,99]
@OUT06880,OUT06864,OUT06848
[5,8-119]
@OUT06882,OUT06866,OUT06850
[5,8-119]
OUT0
[35,99]
@OUT06892,OUT06876,OUT06860
[1,9-119]
OUT0
[35,99]
OUT0
[35,99]
@OUT06884,OUT06868,OUT06852
[5,8-119]
OUT0
[35,99]
OUT0
[35,100]
OUT0
[35,99]
OUT0
[35,99]
OUT0
[35,99]
@OUT06886,OUT06870,OUT06854
[1,8-119]
@OUT06888,OUT06872,OUT06856
[5,8-119]

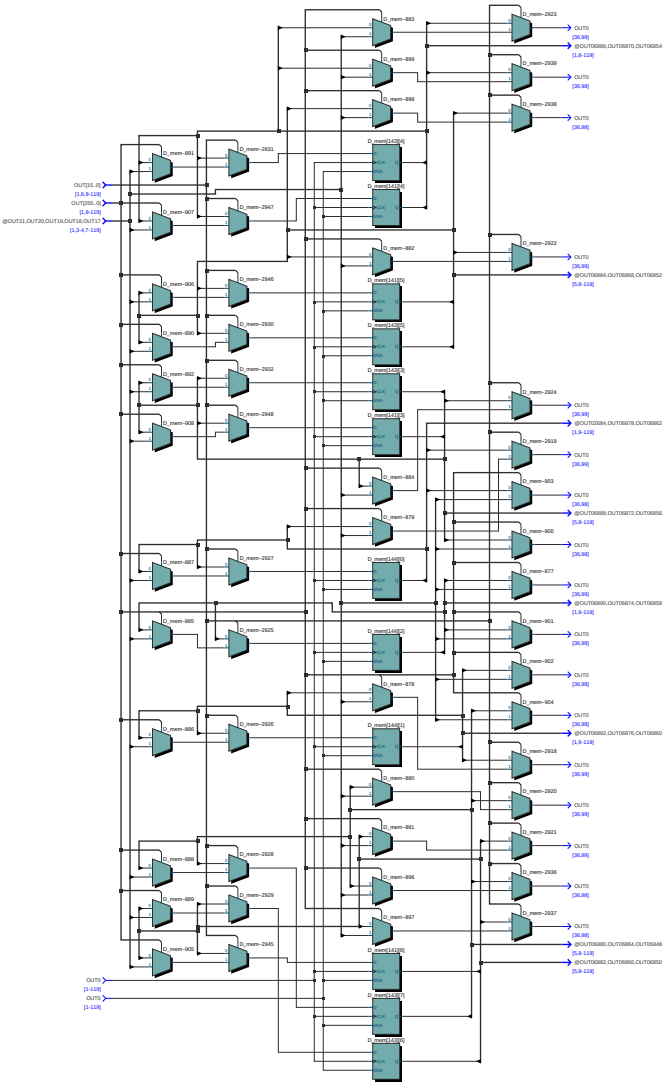
OUT[15..0]
[1,6,9-119]
OUT[255..0]
[1,8-119]
@OUT21,OUT20,OUT19,OUT18,OUT17
[1,3-4,7-119]
OUT0
[1-119]
OUT0
[1-119]
D_mem~2923
OUT0
[36,98]
@OUT06866,OUT06870,OUT06854
[1,8-119]
D_mem~2939
OUT0
[36,98]
D_mem~2938
OUT0
[36,98]
D_mem~883
D_mem~899
D_mem~898
D_mem~891
D_mem~2931
D_mem~907
D_mem~2947
D_mem~882
D_mem~2922
OUT0
[36,99]
@OUT06884,OUT06868,OUT06852
[6,9-119]
D_mem~906
D_mem~2946
D_mem~890
D_mem~2930
D_mem~892
D_mem~2932
D_mem~908
D_mem~2948
D_mem~2924
OUT0
[36,99]
@OUT02684,OUT06878,OUT06862
[1,9-119]
D_mem~2919
OUT0
[36,98]
D_mem~884
D_mem~903
OUT0
[36,98]
@OUT06888,OUT06872,OUT06856
[6,9-119]
D_mem~879
D_mem~900
OUT0
[36,98]
D_mem~887
D_mem~2927
D_mem~877
OUT0
[36,99]
@OUT06890,OUT06874,OUT06858
[1,9-119]
D_mem~905
D_mem~2925
D_mem~901
OUT0
[36,98]
D_mem~902
OUT0
[36,98]
D_mem~878
D_mem~904
OUT0
[36,98]
@OUT06892,OUT06876,OUT06860
[1,9-119]
D_mem~886
D_mem~2926
D_mem~2918
OUT0
[36,98]
D_mem~880
D_mem~2920
OUT0
[36,98]
D_mem~881
D_mem~2921
OUT0
[36,98]
D_mem~888
D_mem~2928
D_mem~896
D_mem~2936
OUT0
[36,98]
D_mem~889
D_mem~2929
D_mem~897
D_mem~2937
OUT0
[36,98]
@OUT06880,OUT06864,OUT06848
[6,8-119]
D_mem~905
D_mem~2945
@OUT06882,OUT06866,OUT06850
[6,8-119]
D_mem[1418]6
D_mem[1418]5
D_mem[1418]4
D_mem[1418]3
D_mem[1418]2
D_mem[1418]1
D_mem[1418]0
D_mem[1418]9
D_mem[1418]8
D_mem[1418]7
D_mem[1418]6
D_mem[1418]5
D_mem[1418]4
D_mem[1418]3
D_mem[1418]2
D_mem[1418]1
D_mem[1418]0

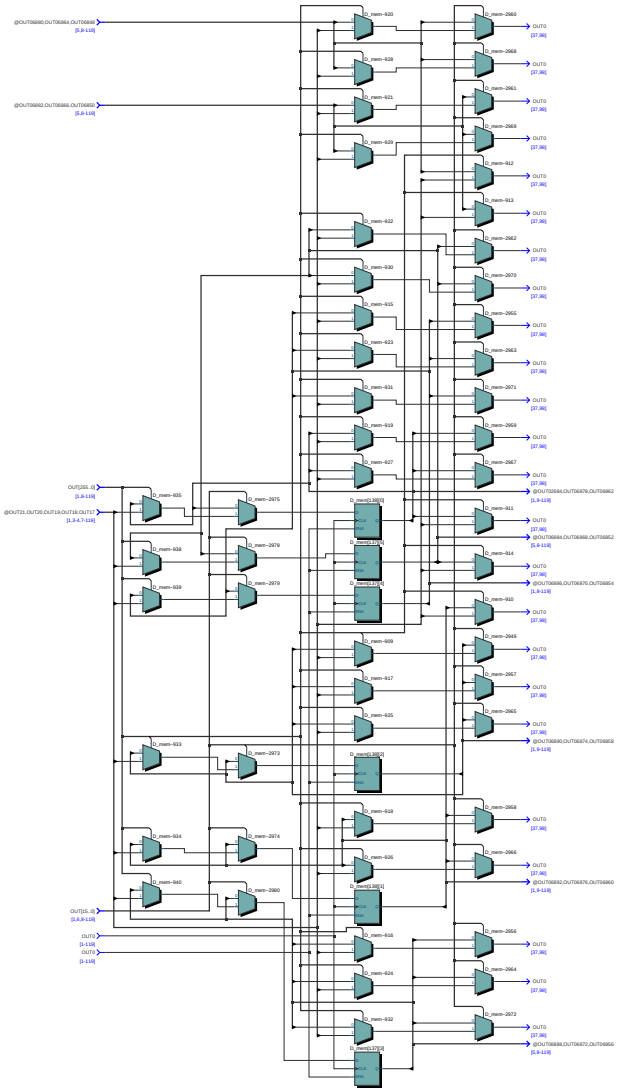
@OUT06890,OUT06854,OUT06858
[5,8-118]
@OUT06892,OUT06856,OUT06850
[5,8-118]
OUT[155..0]
[1,8-118]
@OUT21,OUT20,OUT19,OUT18,OUT17
[1,3-4,7-118]
OUT[15..0]
[1,8,8-118]
OUT0
[1-118]
OUT0
[1-118]
O_mem-920
O_mem-928
O_mem-921
O_mem-929
O_mem-922
O_mem-930
O_mem-915
O_mem-923
O_mem-931
O_mem-919
O_mem-927
O_mem-935
O_mem-938
O_mem-939
O_mem-933
O_mem-934
O_mem-940
O_mem-2975
O_mem-2978
O_mem-2979
O_mem-2973
O_mem-2974
O_mem-2980
O_mem[130][0]
O_mem[131][0]
O_mem[137][0]
O_mem-909
O_mem-917
O_mem-925
O_mem[130][1]
O_mem-918
O_mem-926
O_mem[130][1]
O_mem-916
O_mem-924
O_mem-932
O_mem[137][0]
O_mem-2660
O_mem-2668
O_mem-2661
O_mem-2669
O_mem-912
O_mem-913
O_mem-2662
O_mem-2670
O_mem-2663
O_mem-2671
O_mem-2667
@OUT02684,OUT06678,OUT06862
[1,8-118]
O_mem-911
@OUT06884,OUT06868,OUT06852
[5,8-118]
O_mem-914
@OUT06888,OUT06870,OUT06854
[1,8-118]
O_mem-910
O_mem-2649
O_mem-2657
O_mem-2665
@OUT06890,OUT06874,OUT06858
[1,8-118]
O_mem-2658
O_mem-2666
@OUT06892,OUT06876,OUT06860
[1,8-118]
O_mem-2656
O_mem-2664
O_mem-2672
@OUT06888,OUT06872,OUT06856
[5,8-118]
OUT0
[37,96]

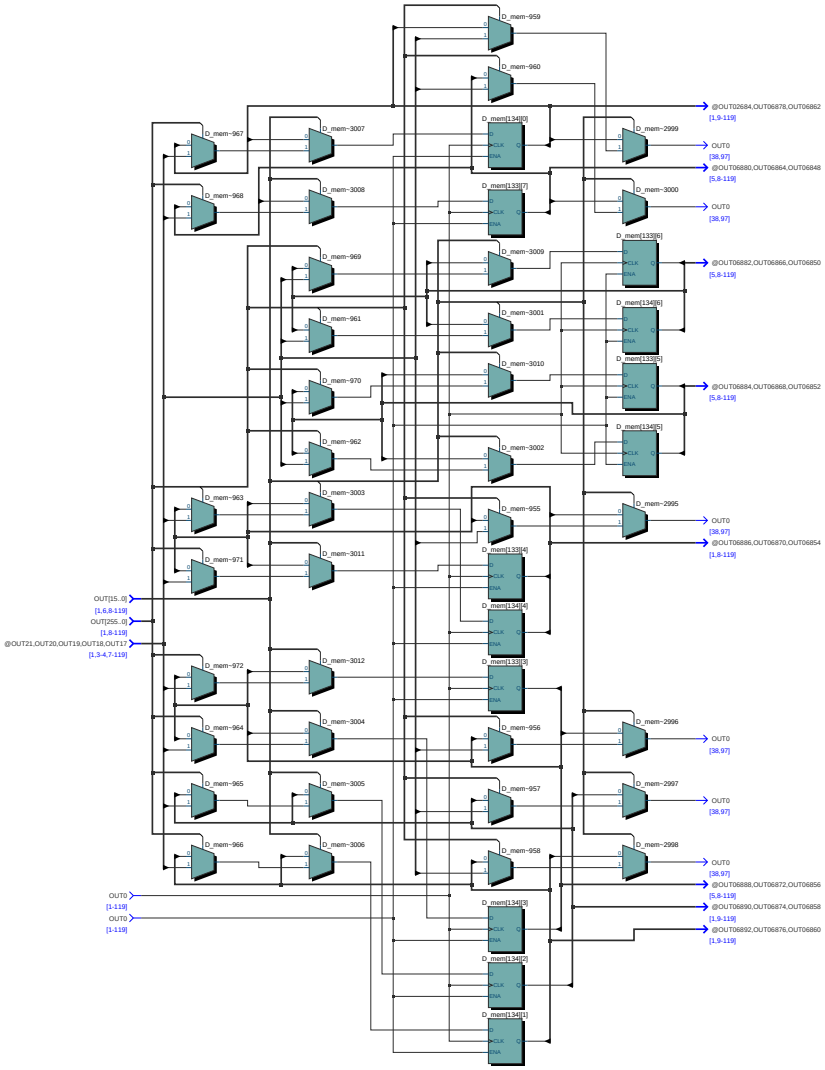
D_mem~959
D_mem~960
D_mem~967
D_mem~3007
D_mem[134][0]
D_mem~2999
@OUT02684,OUT06878,OUT06862
[1,9-119]
OUT0
[38,97]
@OUT06880,OUT06864,OUT06848
[5,8-119]
D_mem~968
D_mem~3008
D_mem[133][7]
D_mem~3000
OUT0
[38,97]
D_mem~969
D_mem~3009
D_mem[133][6]
@OUT06882,OUT06866,OUT06850
[5,8-119]
D_mem~961
D_mem~3001
D_mem[134][6]
D_mem~970
D_mem~3010
D_mem[133][5]
@OUT06884,OUT06868,OUT06852
[5,8-119]
D_mem~962
D_mem~3002
D_mem[134][5]
D_mem~963
D_mem~3003
D_mem~955
D_mem~2995
OUT0
[38,97]
@OUT06886,OUT06870,OUT06854
[1,8-119]
D_mem~971
D_mem~3011
D_mem[133][4]
OUT[15..0]
[1,6,8-119]
OUT[255..0]
[1,8-119]
@OUT21,OUT20,OUT19,OUT18,OUT17
[1,3-4,7-119]
D_mem[134][4]
D_mem~972
D_mem~3012
D_mem[133][3]
D_mem~964
D_mem~3004
D_mem~956
D_mem~2996
OUT0
[38,97]
D_mem~965
D_mem~3005
D_mem~957
D_mem~2997
OUT0
[38,97]
D_mem~966
D_mem~3006
D_mem~958
D_mem~2998
OUT0
[38,97]
@OUT06888,OUT06872,OUT06856
[5,8-119]
@OUT06890,OUT06874,OUT06858
[1,9-119]
@OUT06892,OUT06876,OUT06860
[1,9-119]
OUT0
[1-119]
OUT0
[1-119]
D_mem[134][3]
D_mem[134][2]
D_mem[134][1]

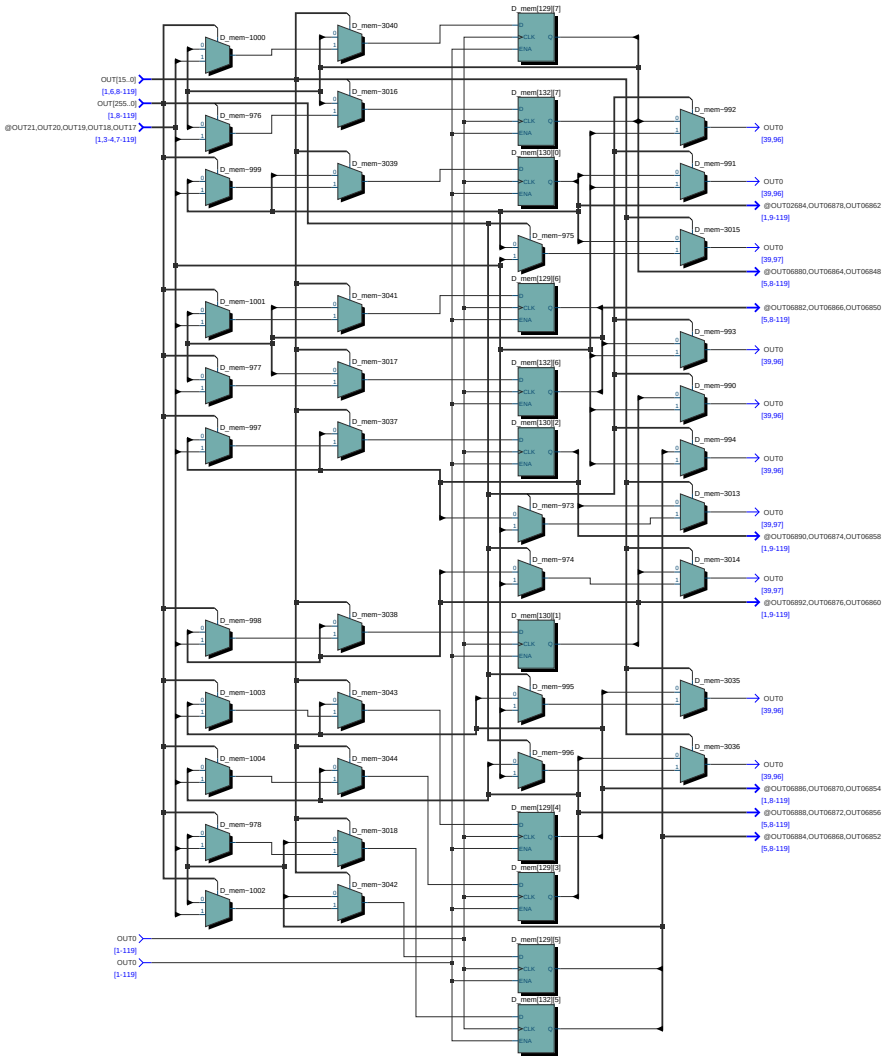
OUT[15..0]
[1,6,8-119]
OUT[255..0]
[1,8-119]
@OUT21,OUT20,OUT19,OUT18,OUT17
[1,3-4,7-119]
OUT0
[1-119]
OUT0
[1-119]
D_mem~1000
D_mem~976
D_mem~999
D_mem~1001
D_mem~977
D_mem~997
D_mem~998
D_mem~1003
D_mem~1004
D_mem~978
D_mem~1002
D_mem~3040
D_mem~3016
D_mem~3039
D_mem~3041
D_mem~3017
D_mem~3037
D_mem~3038
D_mem~3043
D_mem~3044
D_mem~3018
D_mem~3042
D_mem[129][7]
D_mem[132][7]
D_mem[130][0]
D_mem~975
D_mem[129][6]
D_mem[132][6]
D_mem[130][2]
D_mem~973
D_mem~974
D_mem[130][1]
D_mem~995
D_mem~996
D_mem[129][4]
D_mem[129][3]
D_mem[129][5]
D_mem[132][5]
D_mem~992
D_mem~991
D_mem~3015
D_mem~993
D_mem~990
D_mem~994
D_mem~3013
D_mem~3014
D_mem~3035
D_mem~3036
OUT0
[39,96]
@OUT02684,OUT06878,OUT06862
[1,9-119]
OUT0
[39,97]
@OUT06880,OUT06864,OUT06848
[5,8-119]
@OUT06882,OUT06866,OUT06850
[5,8-119]
@OUT06890,OUT06874,OUT06858
[1,9-119]
@OUT06892,OUT06876,OUT06860
[1,9-119]
@OUT06886,OUT06870,OUT06854
[1,8-119]
@OUT06888,OUT06872,OUT06856
[5,8-119]
@OUT06884,OUT06868,OUT06852
[5,8-119]

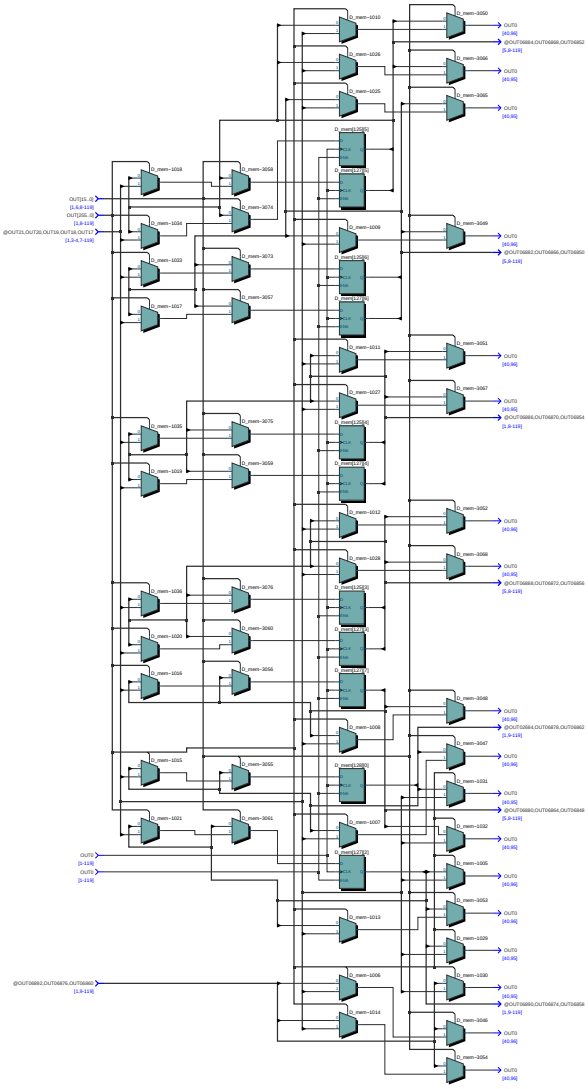
D_mem~1010
D_mem~1026
D_mem~1025
D_mem~3050
D_mem~3066
D_mem~3065
OUT0
[40:96]
@OUT06886:4,OUT06868,OUT06852
[5,8-119]
D_mem~1018
D_mem~3058
D_mem~3074
D_mem~1034
D_mem~1033
D_mem~3073
D_mem~3057
D_mem~1017
OUT[15..0]
[1,6,8-119]
OUT[255..0]
[1,8-119]
@OUT21,OUT20,OUT19,OUT18,OUT17
[1,3-4,7-116]
D_mem~1009
D_mem~3049
@OUT06882:OUT06866,OUT06850
[5,8-119]
D_mem~1011
D_mem~3051
D_mem~1027
D_mem~3067
@OUT06886:OUT06870,OUT06854
[5,8-119]
D_mem~1035
D_mem~3075
D_mem~1019
D_mem~3059
D_mem~1012
D_mem~3052
D_mem~1028
D_mem~3068
@OUT06888:OUT06872,OUT06856
[5,8-119]
D_mem~1036
D_mem~3076
D_mem~1020
D_mem~3060
D_mem~1016
D_mem~3056
D_mem~3048
@OUT02884:OUT06878,OUT06862
[1,9-119]
D_mem~1008
D_mem~3047
D_mem~1032
D_mem~3055
D_mem~1021
D_mem~3061
D_mem~1031
@OUT06880:OUT06864,OUT06848
[5,8-119]
D_mem~1007
D_mem~1032
OUT0
[1-118]
D_mem~1005
D_mem~3053
D_mem~1013
D_mem~1029
D_mem~1030
@OUT06892:OUT06876,OUT06860
[1,9-119]
D_mem~1006
@OUT06890:OUT06874,OUT06858
[1,9-119]
D_mem~1014
D_mem~3046
D_mem~3054

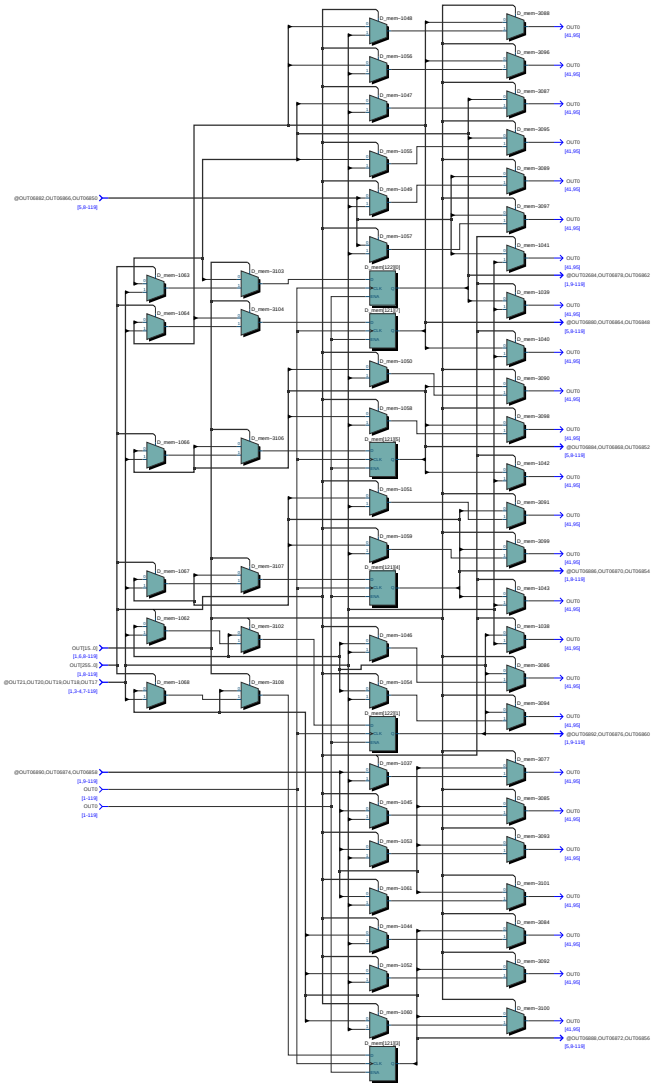
@OUT06882,OUT06866,OUT06850
[5,8-11]
OUT[15..0]
[1,6,8-11]
OUT[255..0]
[1,8-11]
@OUT21,OUT20,OUT19,OUT18,OUT17
[1,3-4,7-11]
@OUT06890,OUT06874,OUT06858
[1,8-11]
OUT0
[1-11]
OUT0
[41,95]
@OUT06884,OUT06878,OUT06862
@OUT06880,OUT06864,OUT06848
@OUT06894,OUT06868,OUT06852
@OUT06886,OUT06870,OUT06854
@OUT06892,OUT06876,OUT06860
@OUT06888,OUT06872,OUT06856

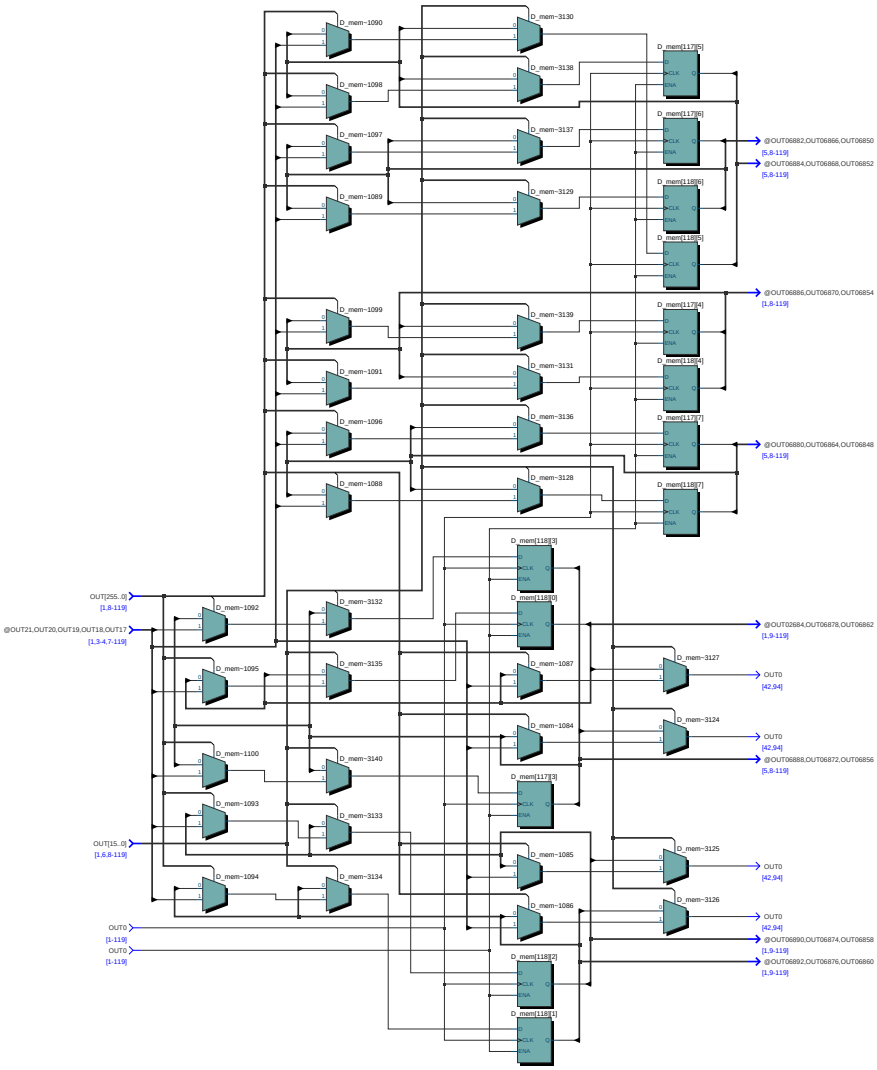
D_mem~1090
D_mem~3130
D_mem[117][5]
D_mem~1098
D_mem~3138
D_mem[117][6]
D_mem~1097
D_mem~3137
@OUT06882,OUT06866,OUT06850
[5,8-119]
@OUT06884,OUT06868,OUT06852
[5,8-119]
D_mem[118][6]
D_mem~1089
D_mem~3129
D_mem[118][5]
@OUT06886,OUT06870,OUT06854
[1,8-119]
D_mem~1099
D_mem~3139
D_mem[117][4]
D_mem~1091
D_mem~3131
D_mem[118][4]
D_mem~1096
D_mem~3136
D_mem[117][7]
@OUT06880,OUT06864,OUT06848
[5,8-119]
D_mem~1088
D_mem~3128
D_mem[118][7]
D_mem[118][3]
OUT[255..0]
[1,8-119]
D_mem~1092
D_mem~3132
D_mem[118][0]
@OUT02684,OUT06878,OUT06862
[1,9-119]
@OUT21,OUT20,OUT19,OUT18,OUT17
[1,3-4,7-119]
D_mem~1095
D_mem~3135
D_mem~1087
D_mem~3127
OUT0
[42,94]
D_mem~3124
D_mem~1084
OUT0
[42,94]
@OUT06888,OUT06872,OUT06856
[5,8-119]
D_mem~1100
D_mem~3140
D_mem[117][3]
D_mem~1093
D_mem~3133
OUT[15..0]
[1,6,8-119]
D_mem~1085
D_mem~3125
OUT0
[42,94]
D_mem~1094
D_mem~3134
D_mem~1086
D_mem~3126
OUT0
[42,94]
@OUT06890,OUT06874,OUT06858
[1,9-119]
OUT0
[1-119]
OUT0
[1-119]
@OUT06892,OUT06876,OUT06860
[1,9-119]
D_mem[118][2]
D_mem[118][1]

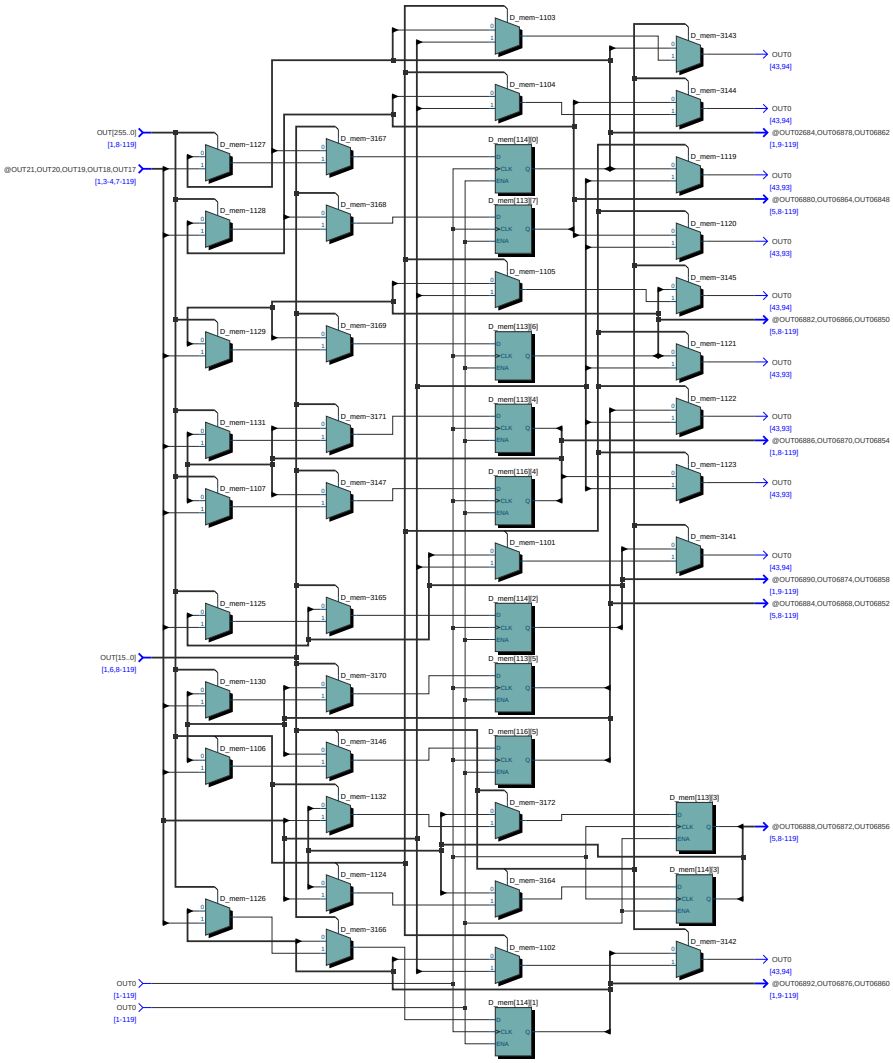
OUT[255..0]
[1,8-119]
@OUT21,OUT20,OUT19,OUT18,OUT17
[1,3-4,7-119]
OUT[15..0]
[1,6,8-119]
OUT0
[1-119]
OUT0
[1-119]
D_mem~1127
D_mem~1128
D_mem~1129
D_mem~1131
D_mem~1107
D_mem~1125
D_mem~1130
D_mem~1106
D_mem~1126
D_mem~3167
D_mem~3168
D_mem~3169
D_mem~3171
D_mem~3147
D_mem~3165
D_mem~3170
D_mem~3146
D_mem~1132
D_mem~1124
D_mem~3166
D_mem~1103
D_mem~1104
D_mem[114][0]
D_mem[113][7]
D_mem~1105
D_mem[113][6]
D_mem[113][4]
D_mem[116][4]
D_mem~1101
D_mem[114][2]
D_mem[113][5]
D_mem[116][5]
D_mem~3172
D_mem~3164
D_mem~1102
D_mem[114][1]
D_mem~3143
D_mem~3144
D_mem~1119
D_mem~1120
D_mem~3145
D_mem~1121
D_mem~1122
D_mem~1123
D_mem~3141
D_mem[113][3]
D_mem[114][3]
D_mem~3142
OUT0
[43,94]
@OUT02684,OUT06878,OUT06862
[1,9-119]
OUT0
[43,93]
@OUT06880,OUT06864,OUT06848
[5,8-119]
OUT0
[43,93]
OUT0
[43,94]
@OUT06882,OUT06866,OUT06850
[5,8-119]
OUT0
[43,93]
OUT0
[43,93]
@OUT06886,OUT06870,OUT06854
[1,8-119]
OUT0
[43,93]
OUT0
[43,94]
@OUT06890,OUT06874,OUT06858
[1,9-119]
@OUT06884,OUT06868,OUT06852
[5,8-119]
@OUT06888,OUT06872,OUT06856
[5,8-119]
OUT0
[43,94]
@OUT06892,OUT06876,OUT06860
[1,9-119]

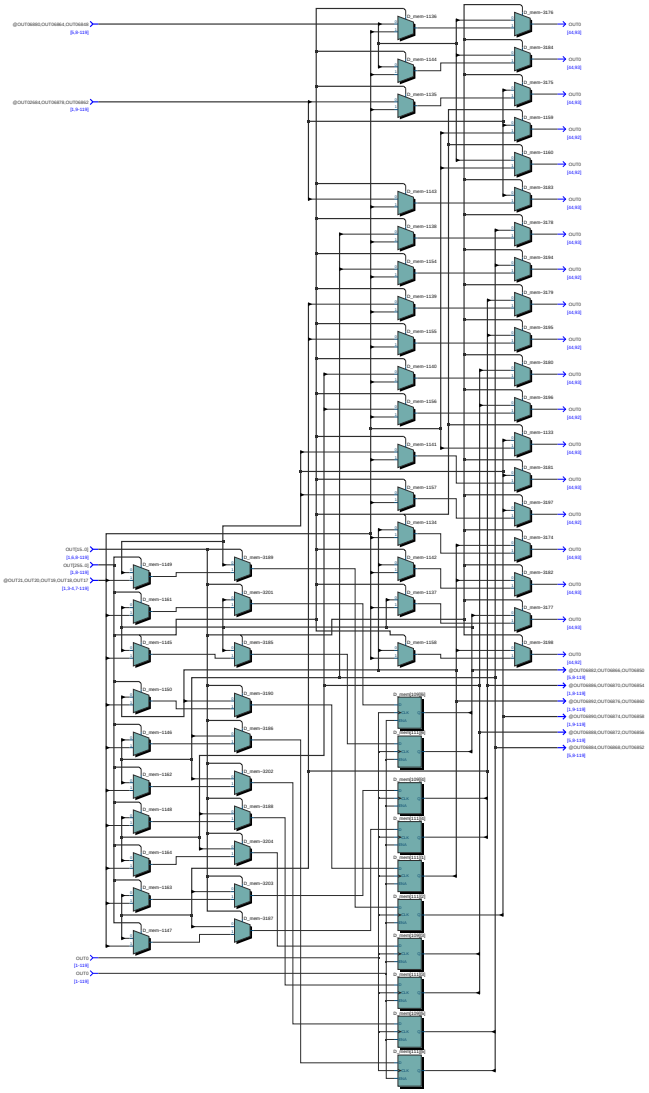
@OUT06885,OUT06884,OUT06883
[1,9-116]
@OUT06464,OUT06873,OUT06863
[1,9-116]
OUT[15..0]
[1,9,9-116]
OUT[63..0]
[1,9-116]
@OUT15,OUT35,OUT36,OUT38,OUT[15..0]
[1,3-4,7-116]
OUT0
[1-116]
OUT0
[1-116]
OUT0
[44,92]
@OUT06892,OUT06866,OUT06850
[1,9-116]
@OUT06896,OUT06870,OUT06854
[1,9-116]
@OUT06892,OUT06876,OUT06860
[1,9-116]
@OUT06895,OUT06871,OUT06858
[1,9-116]
@OUT06888,OUT06872,OUT06856
[1,9-116]
@OUT06884,OUT06868,OUT06852
[1,9-116]

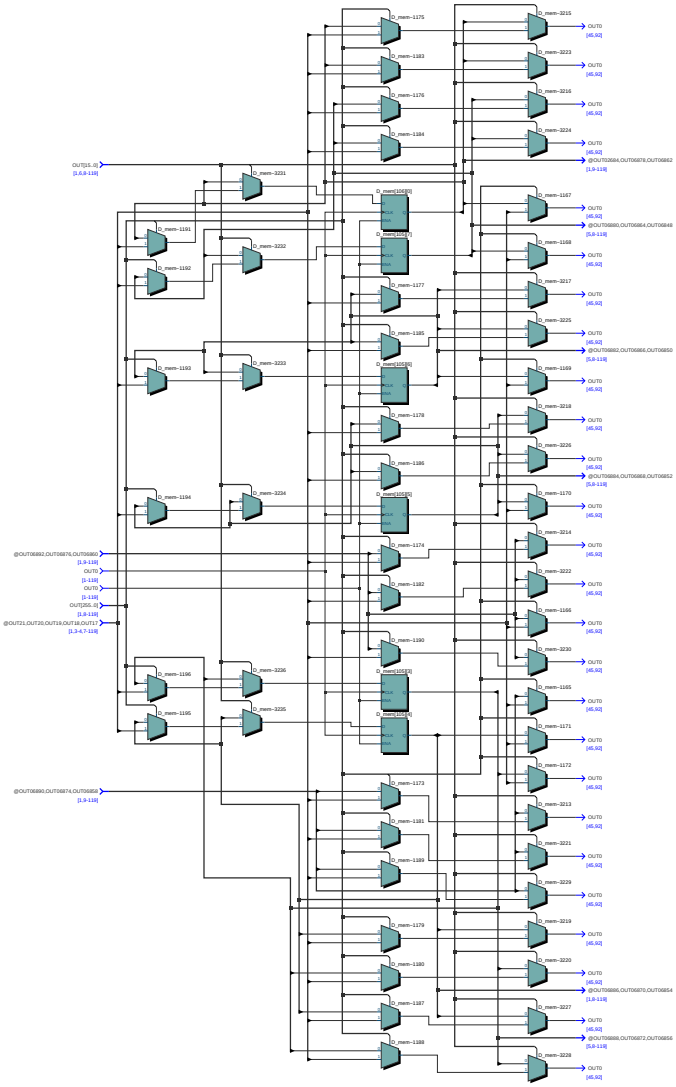
OUT[15..0]
[1,6,9-118]
@OUT06892,OUT06874,OUT06860
[1,9-118]
OUT0
[1-118]
OUT0
[1-118]
OUT[55..0]
[1,8-118]
@OUT21,OUT20,OUT19,OUT18,OUT17
[1,3-4,7-118]
@OUT06890,OUT06874,OUT06858
[1,9-118]
D_mem~1175
D_mem~1183
D_mem~1176
D_mem~1184
D_mem~3231
D_mem~1191
D_mem~3232
D_mem~1192
D_mem~1177
D_mem~1185
D_mem~1193
D_mem~3233
D_mem~1178
D_mem~1186
D_mem~1194
D_mem~3234
D_mem~1174
D_mem~1182
D_mem~1190
D_mem~1196
D_mem~3236
D_mem~1195
D_mem~3235
D_mem~1173
D_mem~1181
D_mem~1189
D_mem~1179
D_mem~1180
D_mem~1187
D_mem~1188
D_mem~3215
D_mem~3223
D_mem~3216
D_mem~3224
@OUT03884,OUT06878,OUT06862
[1,9-118]
D_mem~1167
@OUT06880,OUT06864,OUT06848
[1,9-118]
D_mem~1168
D_mem~3217
D_mem~3225
@OUT06882,OUT06866,OUT06850
[1,9-118]
D_mem~1169
D_mem~3218
D_mem~3226
@OUT06884,OUT06868,OUT06852
[1,9-118]
D_mem~1170
D_mem~3214
D_mem~3222
D_mem~1166
D_mem~3230
D_mem~1165
D_mem~1171
D_mem~1172
D_mem~3213
D_mem~3221
D_mem~3229
D_mem~3219
D_mem~3220
@OUT06886,OUT06870,OUT06854
[1,9-118]
D_mem~3227
@OUT06888,OUT06872,OUT06856
[1,9-118]
D_mem~3228
OUT0
[46,92]

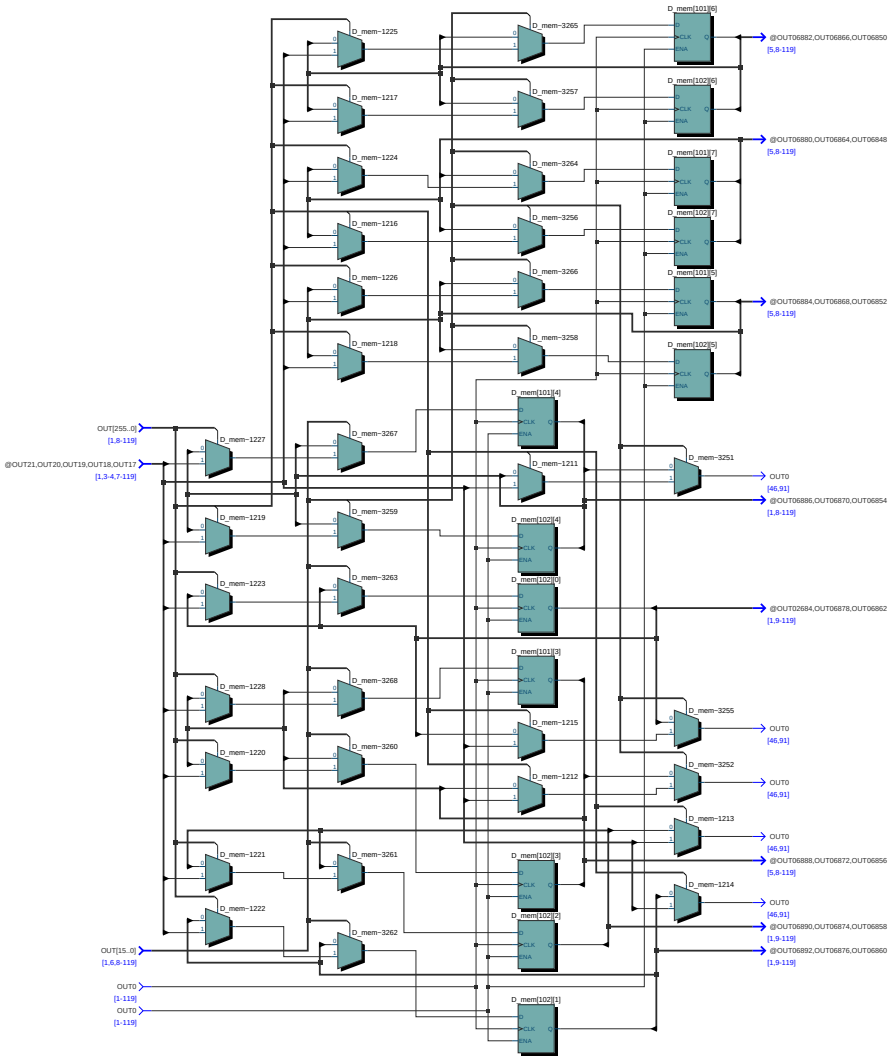
D_mem~1225
D_mem~1217
D_mem~1224
D_mem~1216
D_mem~1226
D_mem~1218
D_mem~1227
D_mem~1219
D_mem~1223
D_mem~1228
D_mem~1220
D_mem~1221
D_mem~1222
D_mem~3265
D_mem~3257
D_mem~3264
D_mem~3256
D_mem~3266
D_mem~3258
D_mem~3267
D_mem~3259
D_mem~3263
D_mem~3268
D_mem~3260
D_mem~3261
D_mem~3262
D_mem~1211
D_mem~1215
D_mem~1212
D_mem~3251
D_mem~3255
D_mem~3252
D_mem~1213
D_mem~1214
D_mem[101][6]
D_mem[102][6]
D_mem[101][7]
D_mem[102][7]
D_mem[101][5]
D_mem[102][5]
D_mem[101][4]
D_mem[102][4]
D_mem[102][0]
D_mem[101][3]
D_mem[102][3]
D_mem[102][2]
D_mem[102][1]
OUT[255..0]
[1,8-119]
@OUT21,OUT20,OUT19,OUT18,OUT17
[1,3-4,7-119]
OUT[15..0]
[1,6,8-119]
OUT0
[1-119]
OUT0
[1-119]
@OUT06882,OUT06866,OUT06850
[5,8-119]
@OUT06880,OUT06864,OUT06848
[5,8-119]
@OUT06884,OUT06868,OUT06852
[5,8-119]
OUT0
[46,91]
@OUT06886,OUT06870,OUT06854
[1,8-119]
@OUT02684,OUT06878,OUT06862
[1,9-119]
OUT0
[46,91]
OUT0
[46,91]
OUT0
[46,91]
@OUT06888,OUT06872,OUT06856
[5,8-119]
OUT0
[46,91]
@OUT06890,OUT06874,OUT06858
[1,9-119]
@OUT06892,OUT06876,OUT06860
[1,9-119]

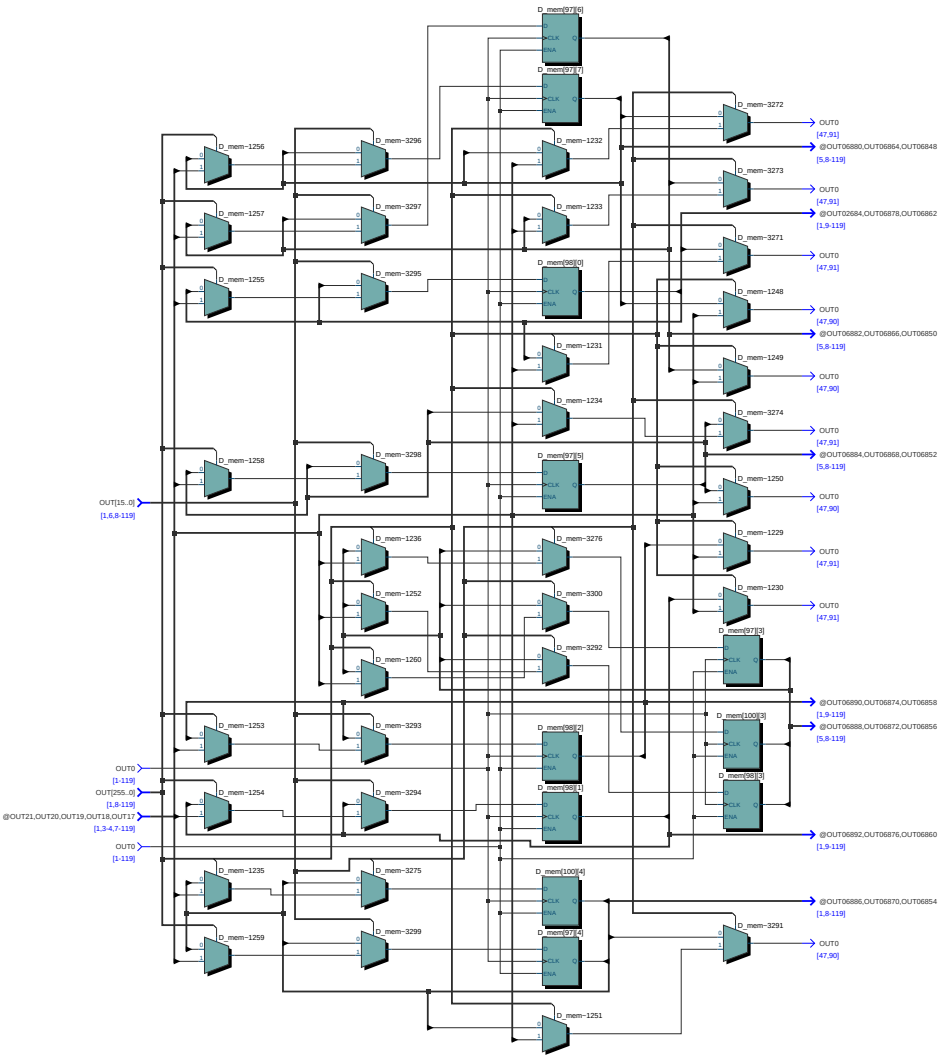
D_mem[97][6]
D_mem[97][7]
D_mem[98][0]
D_mem[97][5]
D_mem[97][3]
D_mem[100][3]
D_mem[98][3]
D_mem[98][2]
D_mem[98][1]
D_mem[100][4]
D_mem[97][4]
D_mem-1256
D_mem-1257
D_mem-1255
D_mem-1258
D_mem-1253
D_mem-1254
D_mem-1235
D_mem-1259
D_mem-3296
D_mem-3297
D_mem-3295
D_mem-3298
D_mem-1236
D_mem-1252
D_mem-1260
D_mem-3293
D_mem-3294
D_mem-3275
D_mem-3299
D_mem-1232
D_mem-1233
D_mem-1231
D_mem-1234
D_mem-3276
D_mem-3300
D_mem-3292
D_mem-1251
D_mem-3272
D_mem-3273
D_mem-3271
D_mem-1248
D_mem-1249
D_mem-3274
D_mem-1250
D_mem-1229
D_mem-1230
D_mem-3291
OUT[15..0]
[1,6,8-119]
OUT0
[1-119]
OUT[255..0]
[1,8-119]
@OUT21,OUT20,OUT19,OUT18,OUT17
[1,3-4,7-119]
OUT0
[1-119]
OUT0
[47,91]
@OUT06880,OUT06864,OUT06848
[5,8-119]
OUT0
[47,91]
@OUT02684,OUT06878,OUT06862
[1,9-119]
OUT0
[47,91]
OUT0
[47,90]
@OUT06882,OUT06866,OUT06850
[5,8-119]
OUT0
[47,90]
OUT0
[47,91]
@OUT06884,OUT06868,OUT06852
[5,8-119]
OUT0
[47,90]
OUT0
[47,91]
OUT0
[47,91]
@OUT06890,OUT06874,OUT06858
[1,9-119]
@OUT06888,OUT06872,OUT06856
[5,8-119]
@OUT06892,OUT06876,OUT06860
[1,9-119]
@OUT06886,OUT06870,OUT06854
[1,8-119]
OUT0
[47,90]

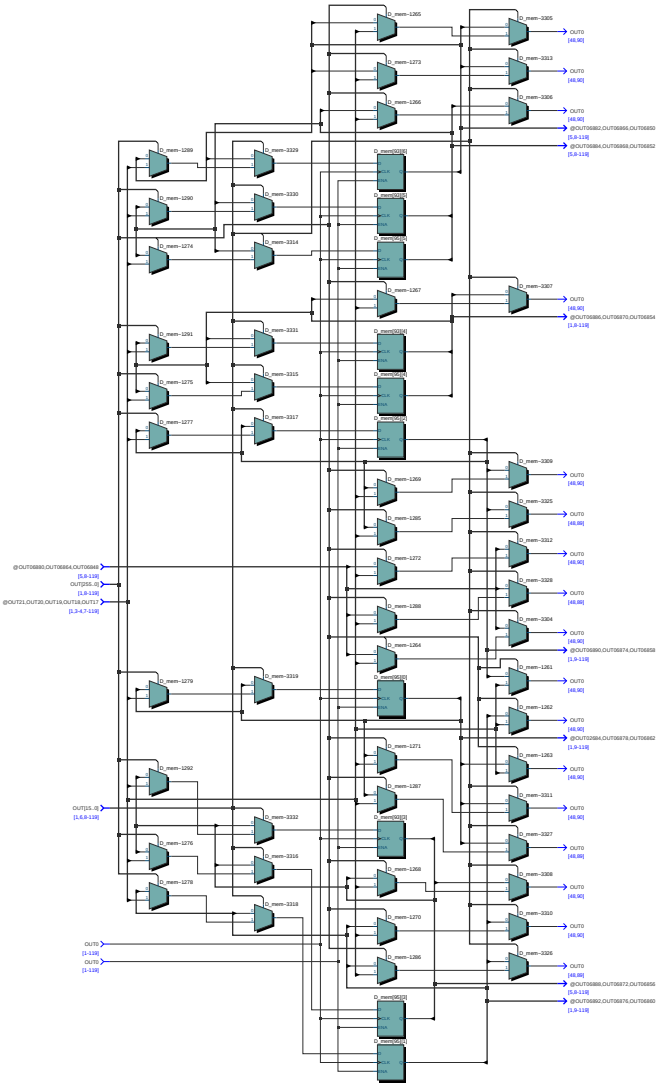
D_mem~1265
D_mem~1273
D_mem~1266
D_mem~3305
D_mem~3313
D_mem~3306
OUT0
[49,90]
@OUT06892,OUT06866,OUT06850
[5,8-118]
@OUT06894,OUT06868,OUT06852
[5,8-118]
D_mem~1289
D_mem~3329
D_mem[0][0]
D_mem~1290
D_mem~3330
D_mem[0][1]
D_mem~1274
D_mem~3314
D_mem[0][2]
D_mem~1267
D_mem~3307
@OUT06896,OUT06870,OUT06854
[1,8-118]
D_mem~1291
D_mem~3331
D_mem[0][3]
D_mem~1275
D_mem~3315
D_mem[0][4]
D_mem~1277
D_mem~3317
D_mem[0][5]
D_mem~1269
D_mem~3309
D_mem~1285
D_mem~3325
[49,88]
D_mem~1272
D_mem~3312
D_mem~1268
D_mem~3308
D_mem~3304
@OUT06890,OUT06874,OUT06858
[1,8-118]
D_mem~1264
D_mem~1261
D_mem~1262
@OUT02984,OUT06878,OUT06862
[1,9-118]
D_mem~1263
D_mem~1271
D_mem~1287
D_mem~3311
D_mem~3327
D_mem~1268
D_mem~3309
D_mem~3310
D_mem~1270
D_mem~1286
D_mem~3326
@OUT06888,OUT06872,OUT06856
[5,8-118]
@OUT06892,OUT06876,OUT06860
[1,9-118]
@OUT06890,OUT06864,OUT06848
[5,8-118]
OUT[255..0]
[1,8-118]
@OUT21,OUT20,OUT19,OUT18,OUT17
[1,3-4,7-118]
D_mem~1279
D_mem~3319
D_mem~1292
OUT[15..0]
[1,6,8-118]
D_mem~3332
D_mem~1276
D_mem~3316
D_mem~1278
D_mem~3318
OUT0
[1-118]
OUT0
[1-118]
D_mem[95][0]
D_mem[95][1]

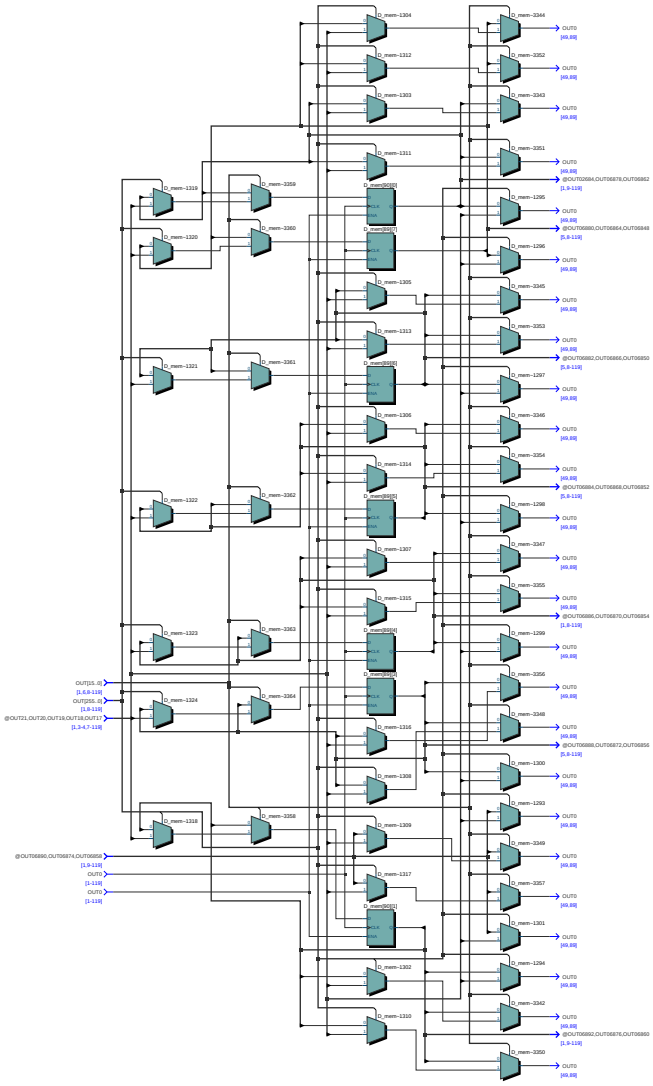
D_mem~1304
D_mem~1312
D_mem~1303
D_mem~1311
D_mem~1319
D_mem~3359
D_mem[60][0]
D_mem~1320
D_mem~3360
D_mem[60][1]
D_mem~1305
D_mem~1313
D_mem~1321
D_mem~3361
D_mem[60][2]
D_mem~1306
D_mem~1314
D_mem~1322
D_mem~3362
D_mem[60][3]
D_mem~1307
D_mem~1315
D_mem~1323
D_mem~3363
D_mem[60][4]
D_mem~1324
D_mem~3364
D_mem[60][5]
D_mem~1316
D_mem~1308
D_mem~1318
D_mem~3358
D_mem~1309
D_mem~1317
D_mem[60][6]
D_mem~1302
D_mem~1310
D_mem~3344
D_mem~3352
D_mem~3343
D_mem~3351
D_mem~1296
D_mem~1296
D_mem~3345
D_mem~3353
D_mem~1297
D_mem~3346
D_mem~3354
D_mem~1298
D_mem~3347
D_mem~3355
D_mem~1299
D_mem~3356
D_mem~3348
D_mem~1300
D_mem~1293
D_mem~3349
D_mem~3357
D_mem~1301
D_mem~1294
D_mem~3342
D_mem~3350
OUT0
[49,88]
@OUT02684,OUT06878,OUT06862
[1,9-119]
@OUT06880,OUT06864,OUT06848
[5,8-119]
@OUT06882,OUT06866,OUT06850
[5,8-119]
@OUT06884,OUT06868,OUT06852
[5,8-119]
@OUT06886,OUT06870,OUT06854
[1,8-119]
@OUT06888,OUT06872,OUT06856
[5,8-119]
@OUT06892,OUT06876,OUT06860
[1,9-119]
OUT[15..0]
[1,8,9-119]
OUT[255..8]
[1,9-119]
@OUT21,OUT20,OUT19,OUT18,OUT17
[1,3-4,7-119]
@OUT06890,OUT06874,OUT06858
[1,9-119]
OUT7
[1-119]
OUT2
[1-119]

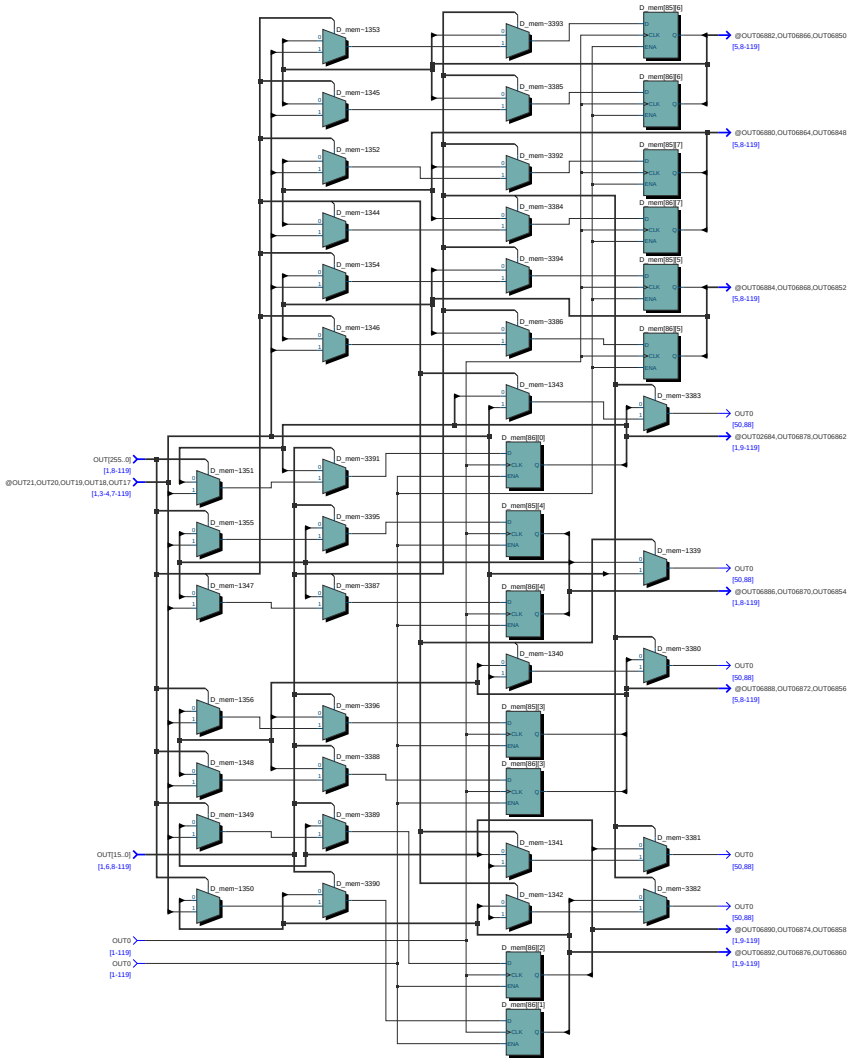
D_mem~1353
D_mem~1345
D_mem~1352
D_mem~1344
D_mem~1354
D_mem~1346
D_mem~3393
D_mem~3385
D_mem~3392
D_mem~3384
D_mem~3394
D_mem~3386
D_mem[85][6]
D_mem[86][6]
D_mem[85][7]
D_mem[86][7]
D_mem[85][5]
D_mem[86][5]
@OUT06882,OUT06866,OUT06850
[5,8-119]
@OUT06880,OUT06864,OUT06848
[5,8-119]
@OUT06884,OUT06868,OUT06852
[5,8-119]
D_mem~1343
D_mem~3383
OUT0
[50,88]
@OUT02684,OUT06878,OUT06862
[1,9-119]
OUT[255..0]
[1,8-119]
@OUT21,OUT20,OUT19,OUT18,OUT17
[1,3-4,7-119]
D_mem~1351
D_mem~3391
D_mem[86][0]
D_mem[85][4]
D_mem~1355
D_mem~3395
D_mem~1339
OUT0
[50,88]
@OUT06886,OUT06870,OUT06854
[1,8-119]
D_mem~1347
D_mem~3387
D_mem[86][4]
D_mem~1340
D_mem~3380
OUT0
[50,88]
@OUT06888,OUT06872,OUT06856
[5,8-119]
D_mem~1356
D_mem~3396
D_mem[85][3]
D_mem[86][3]
D_mem~1348
D_mem~3388
D_mem~1349
D_mem~3389
D_mem~1341
D_mem~3381
OUT0
[50,88]
OUT[15..0]
[1,6,8-119]
D_mem~1350
D_mem~3390
D_mem~1342
D_mem~3382
OUT0
[50,88]
@OUT06890,OUT06874,OUT06858
[1,9-119]
@OUT06892,OUT06876,OUT06860
[1,9-119]
OUT0
[1-119]
OUT0
[1-119]
D_mem[86][2]
D_mem[86][1]

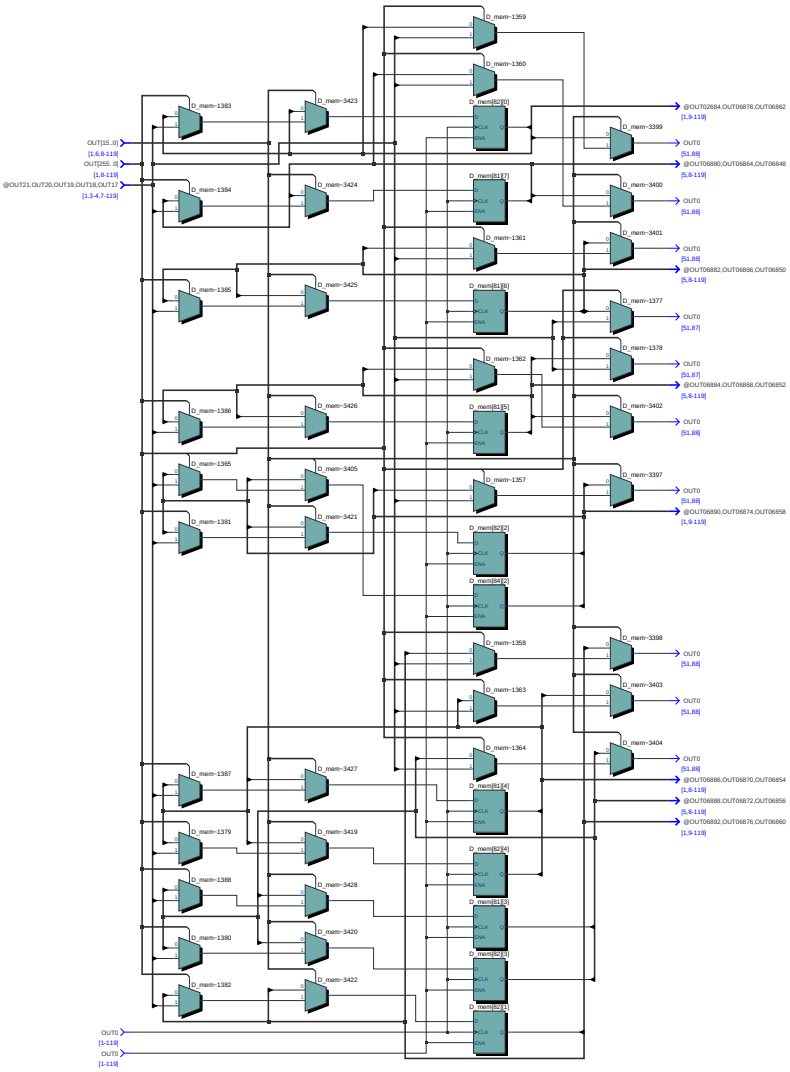
OUT[15..0]
[1,6,8-119]
OUT[255..0]
[1,8-119]
@OUT21,OUT20,OUT19,OUT18,OUT17
[1,3-4,7-119]
OUT0
[1-119]
OUT0
[1-119]
D_mem~1383
D_mem~1384
D_mem~1385
D_mem~1386
D_mem~1365
D_mem~1381
D_mem~1387
D_mem~1379
D_mem~1388
D_mem~1380
D_mem~1382
D_mem~3423
D_mem~3424
D_mem~3425
D_mem~3426
D_mem~3405
D_mem~3421
D_mem~3427
D_mem~3419
D_mem~3428
D_mem~3420
D_mem~3422
D_mem~1359
D_mem~1360
D_mem[82][0]
D_mem[81][7]
D_mem~1361
D_mem[81][6]
D_mem~1362
D_mem[81][5]
D_mem~1357
D_mem[82][2]
D_mem[84][2]
D_mem~1358
D_mem~1363
D_mem~1364
D_mem[81][4]
D_mem[82][4]
D_mem[81][3]
D_mem[82][1]
D_mem[82][3]
D_mem~3399
D_mem~3400
D_mem~3401
D_mem~1377
D_mem~1378
D_mem~3402
D_mem~3397
D_mem~3398
D_mem~3403
D_mem~3404
@OUT02684,OUT06878,OUT06862
[1,9-119]
OUT0
[51,88]
@OUT06880,OUT06864,OUT06848
[5,8-119]
OUT0
[51,88]
OUT0
[51,88]
@OUT06882,OUT06866,OUT06850
[5,8-119]
OUT0
[51,87]
OUT0
[51,87]
@OUT06884,OUT06868,OUT06852
[5,8-119]
OUT0
[51,88]
OUT0
[51,88]
@OUT06890,OUT06874,OUT06858
[1,9-119]
OUT0
[51,88]
OUT0
[51,88]
OUT0
[51,88]
@OUT06886,OUT06870,OUT06854
[1,8-119]
@OUT06888,OUT06872,OUT06856
[5,8-119]
@OUT06892,OUT06876,OUT06860
[1,9-119]

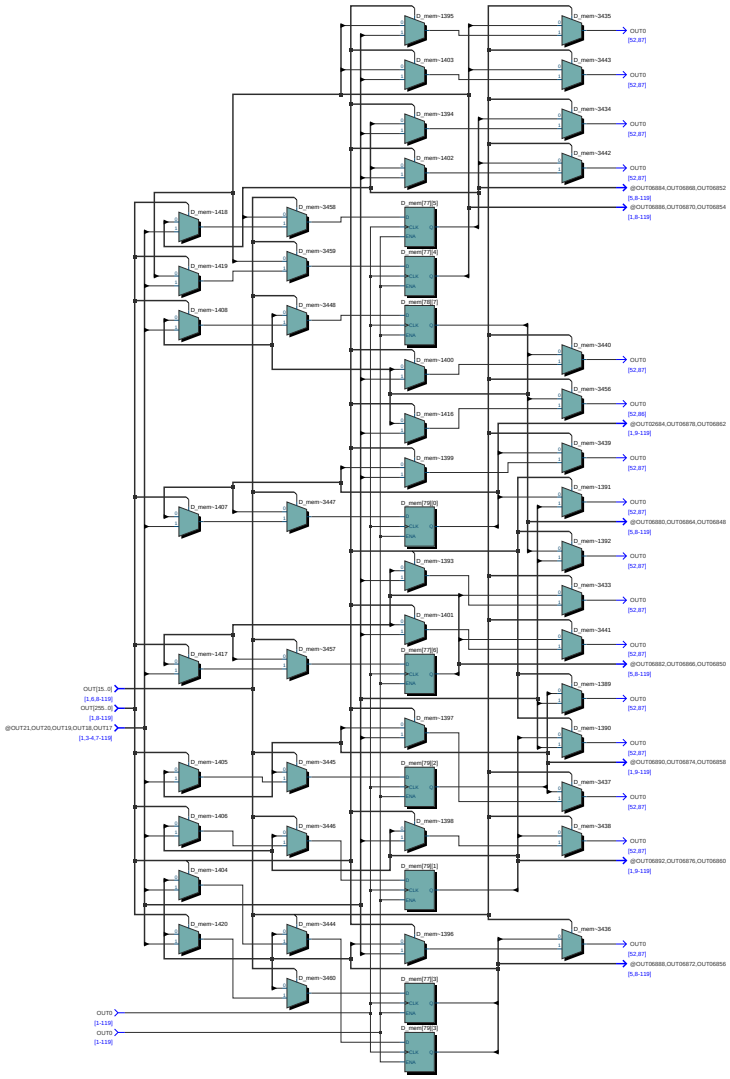
D_mem~1395
D_mem~1403
D_mem~1394
D_mem~1402
D_mem~3435
D_mem~3443
D_mem~3434
D_mem~3442
OUT0
[52,87]
@OUT06884,OUT06998,OUT06852
[5,8-119]
@OUT06886,OUT06870,OUT06854
[1,8-119]
D_mem~1418
D_mem~1419
D_mem~1408
D_mem~3458
D_mem~3459
D_mem~3448
D_mem~3440
D_mem~3456
D_mem~1400
D_mem~1416
D_mem~1399
D_mem~3439
D_mem~1391
D_mem~1392
D_mem~3433
D_mem~1393
D_mem~1401
D_mem~3441
D_mem~1389
D_mem~1390
D_mem~3437
D_mem~3438
D_mem~3436
D_mem~1407
D_mem~3447
D_mem~1417
D_mem~3457
D_mem~1397
D_mem~1405
D_mem~3445
D_mem~1406
D_mem~3446
D_mem~1398
D_mem~1404
D_mem~1420
D_mem~3444
D_mem~1396
D_mem~3460
D_mem[77][5]
D_mem[77][4]
D_mem[78][7]
D_mem[79][0]
D_mem[77][6]
D_mem[79][2]
D_mem[79][1]
D_mem[77][3]
D_mem[79][3]
D
CLK
Q
ENA
OUT[15..0]
[1,6,8-119]
OUT[255..0]
[1,8-119]
@OUT21,OUT20,OUT19,OUT18,OUT17
[1,3-4,7-119]
OUT0
[1-119]

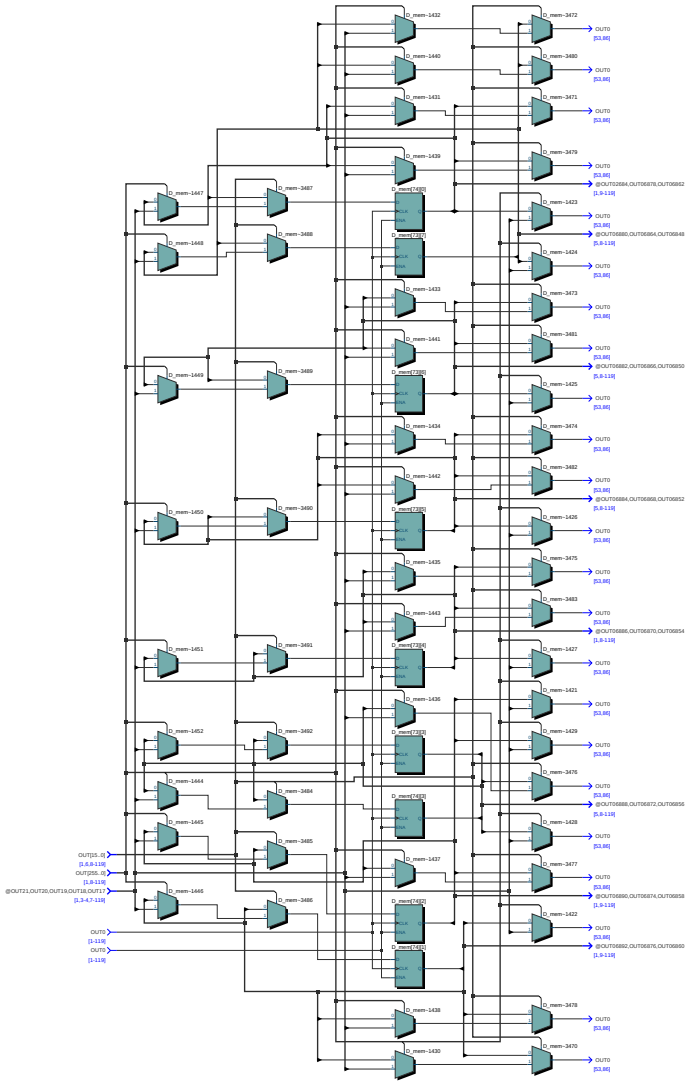
D_mem~1432
D_mem~1440
D_mem~1431
D_mem~1439
D_mem~1447
D_mem~3487
D_mem~1448
D_mem~3488
D_mem~1433
D_mem~1441
D_mem~1449
D_mem~3489
D_mem~1434
D_mem~1442
D_mem~1450
D_mem~3490
D_mem~1435
D_mem~1443
D_mem~1451
D_mem~3491
D_mem~1436
D_mem~1452
D_mem~3492
D_mem~1464
D_mem~3484
D_mem~1465
D_mem~3485
D_mem~1437
D_mem~1466
D_mem~3486
D_mem~1438
D_mem~1430
D_mem~3472
D_mem~3480
D_mem~3471
D_mem~3479
D_mem~1423
D_mem~1424
D_mem~3473
D_mem~3481
D_mem~1425
D_mem~3474
D_mem~3482
D_mem~1426
D_mem~3475
D_mem~3483
D_mem~1427
D_mem~1421
D_mem~1429
D_mem~3476
D_mem~1428
D_mem~3477
D_mem~1422
D_mem~3478
D_mem~3470
OUT0
[53,86]
@OUT02684,OUT06878,OUT06862
[1,0-119]
@OUT06880,OUT06864,OUT06848
[5,0-119]
@OUT06882,OUT06866,OUT06850
[5,0-119]
@OUT06884,OUT06868,OUT06852
[5,0-119]
@OUT06886,OUT06870,OUT06854
[1,0-119]
@OUT06888,OUT06872,OUT06856
[5,0-119]
@OUT06890,OUT06874,OUT06858
[1,0-119]
@OUT06892,OUT06876,OUT06860
[1,0-119]
OUT[15..0]
[1,6,8-119]
OUT[255..0]
[1,8-119]
@OUT21,OUT20,OUT19,OUT18,OUT17
[1,3-4,7-119]
OUT0
[1-119]
OUT0
[1-119]

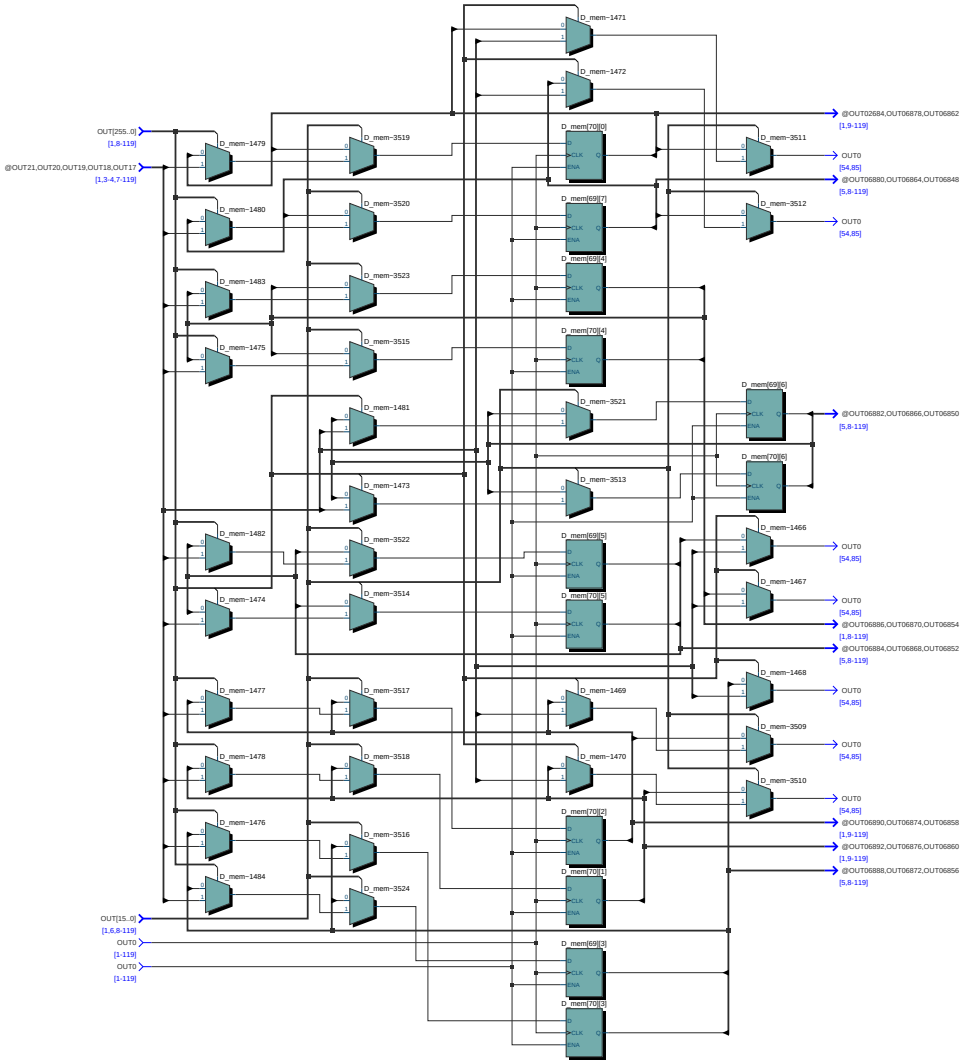
OUT[255..0]
[1,8-119]
@OUT21,OUT20,OUT19,OUT18,OUT17
[1,3-4,7-119]
OUT[15..0]
[1,6,8-119]
OUT0
[1-119]
OUT0
[1-119]
D_mem~1479
D_mem~1480
D_mem~1483
D_mem~1475
D_mem~1482
D_mem~1474
D_mem~1477
D_mem~1478
D_mem~1476
D_mem~1484
D_mem~3519
D_mem~3520
D_mem~3523
D_mem~3515
D_mem~1481
D_mem~1473
D_mem~3522
D_mem~3514
D_mem~3517
D_mem~3518
D_mem~3516
D_mem~3524
D_mem~1471
D_mem~1472
D_mem[70][0]
D_mem[69][7]
D_mem[69][4]
D_mem[70][4]
D_mem~3521
D_mem~3513
D_mem[69][5]
D_mem[70][5]
D_mem~1469
D_mem~1470
D_mem[70][2]
D_mem[70][1]
D_mem[69][3]
D_mem[70][3]
D_mem~3511
D_mem~3512
D_mem[69][6]
D_mem[70][6]
D_mem~1466
D_mem~1467
D_mem~1468
D_mem~3509
D_mem~3510
@OUT02684,OUT06878,OUT06862
[1,9-119]
OUT0
[54,85]
@OUT06880,OUT06864,OUT06848
[5,8-119]
OUT0
[54,85]
@OUT06882,OUT06866,OUT06850
[5,8-119]
OUT0
[54,85]
OUT0
[54,85]
@OUT06886,OUT06870,OUT06854
[1,8-119]
@OUT06884,OUT06868,OUT06852
[5,8-119]
OUT0
[54,85]
OUT0
[54,85]
OUT0
[54,85]
@OUT06890,OUT06874,OUT06858
[1,9-119]
@OUT06892,OUT06876,OUT06860
[1,9-119]
@OUT06888,OUT06872,OUT06856
[5,8-119]

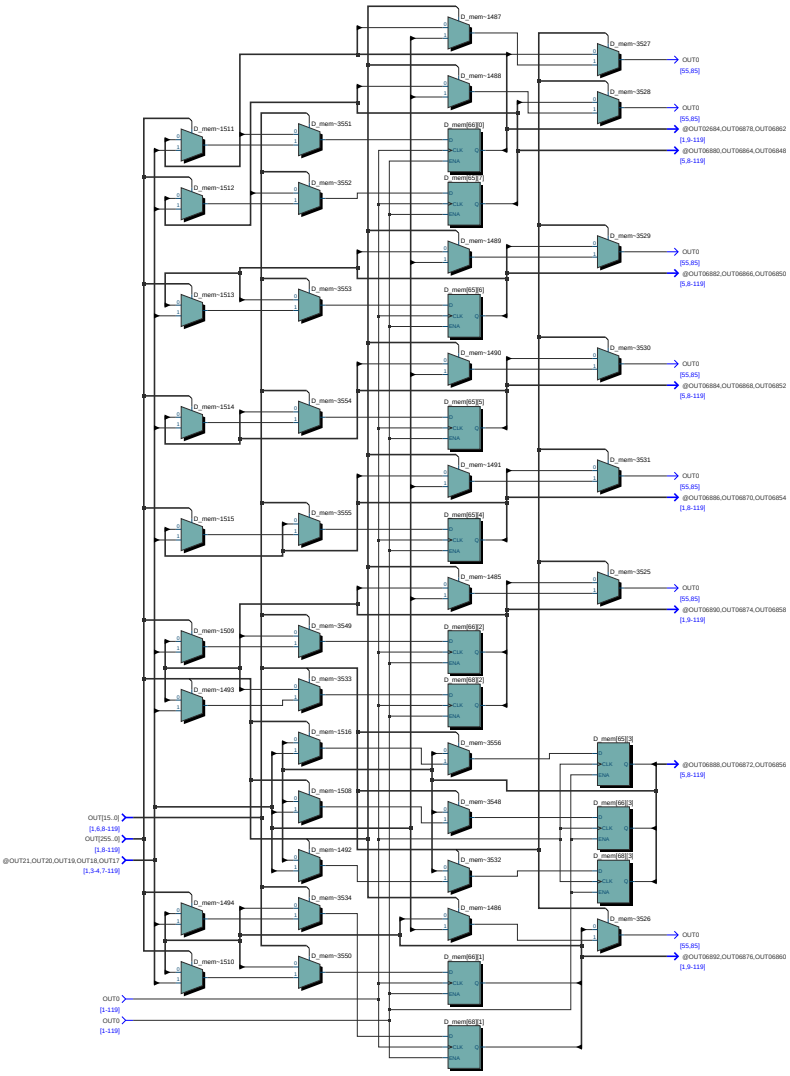
D_mem~1487
D_mem~1488
D_mem~1489
D_mem~1490
D_mem~1491
D_mem~1485
D_mem~1486
D_mem~1511
D_mem~1512
D_mem~1513
D_mem~1514
D_mem~1515
D_mem~1509
D_mem~1493
D_mem~1516
D_mem~1508
D_mem~1492
D_mem~1494
D_mem~1510
D_mem~3551
D_mem~3552
D_mem~3553
D_mem~3554
D_mem~3555
D_mem~3549
D_mem~3533
D_mem~3534
D_mem~3550
D_mem~3527
D_mem~3528
D_mem~3529
D_mem~3530
D_mem~3531
D_mem~3525
D_mem~3526
D_mem~3556
D_mem~3548
D_mem~3532
D_mem[66][0]
D_mem[65][7]
D_mem[65][6]
D_mem[65][5]
D_mem[65][4]
D_mem[66][2]
D_mem[66][3]
D_mem[66][1]
D_mem[68][1]
D_mem[65][3]
D_mem[65][2]
D_mem[68][2]
D
CLK
Q
ENA
OUT0
[55,85]
@OUT06684,OUT06878,OUT06862
[1,9-119]
@OUT06880,OUT06864,OUT06848
[5,8-119]
@OUT06882,OUT06866,OUT06850
@OUT06884,OUT06868,OUT06852
@OUT06886,OUT06870,OUT06854
@OUT06890,OUT06874,OUT06858
@OUT06888,OUT06872,OUT06856
@OUT06892,OUT06876,OUT06860
OUT[15..0]
[1,6,8-119]
OUT[255..0]
[1,8-119]
@OUT21,OUT20,OUT19,OUT18,OUT17
[1,3-4,7-119]
[1-119]

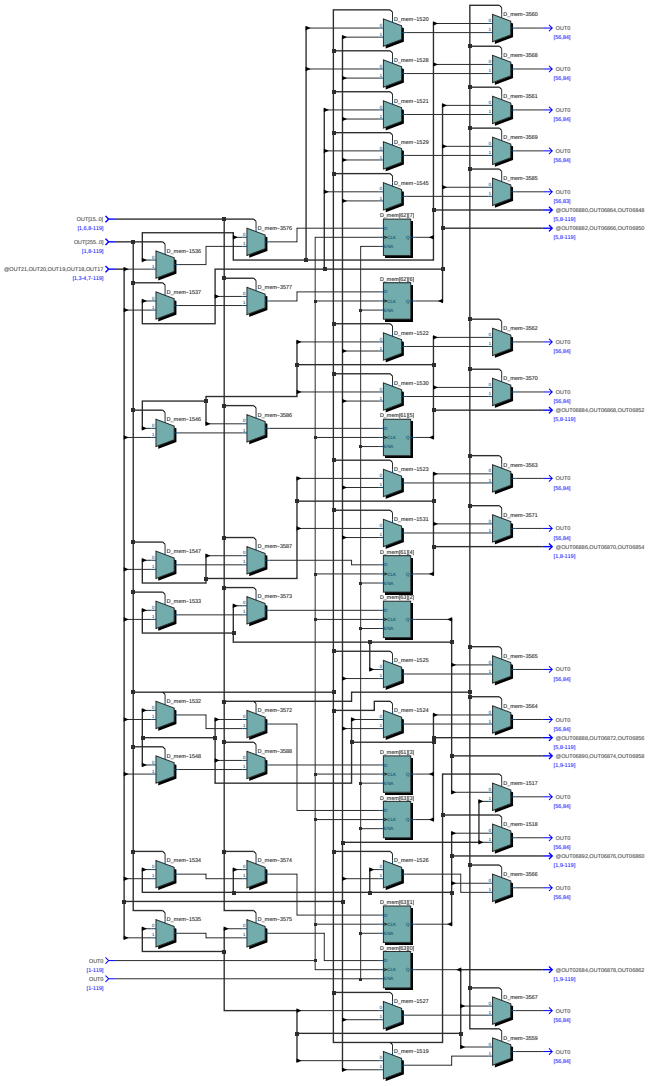
OUT[15..0]
[1,6,9-119]
OUT[255..0]
[1,8-119]
@OUT21,OUT20,OUT19,OUT18,OUT17
[1,3-4,7-119]
OUT0
[1-119]
OUT0
[1-119]
D_mem~1520
D_mem~1528
D_mem~1521
D_mem~1529
D_mem~1545
D_mem~3576
D_mem~1536
D_mem~1537
D_mem~3577
D_mem~1522
D_mem~1530
D_mem~1546
D_mem~3586
D_mem~1523
D_mem~1531
D_mem~1547
D_mem~3587
D_mem~1533
D_mem~3573
D_mem~1525
D_mem~1532
D_mem~3572
D_mem~1524
D_mem~1548
D_mem~3588
D_mem~1517
D_mem~1518
D_mem~1534
D_mem~3574
D_mem~1526
D_mem~1535
D_mem~3575
D_mem~1527
D_mem~1519
D_mem~3560
D_mem~3568
D_mem~3561
D_mem~3569
D_mem~3585
D_mem~3562
D_mem~3570
D_mem~3563
D_mem~3571
D_mem~3565
D_mem~3564
D_mem~3566
D_mem~3567
D_mem~3559
OUT0
[56,84]
OUT0
[56,82]
@OUT06880,OUT06864,OUT06848
[1,9-119]
@OUT06882,OUT06866,OUT06850
[1,9-119]
@OUT06884,OUT06868,OUT06852
[1,9-119]
@OUT06886,OUT06870,OUT06854
[1,9-119]
@OUT06888,OUT06872,OUT06856
[1,9-119]
@OUT06890,OUT06874,OUT06858
[1,9-119]
@OUT06892,OUT06876,OUT06860
[1,9-119]
@OUT06894,OUT06878,OUT06862
[1,9-119]

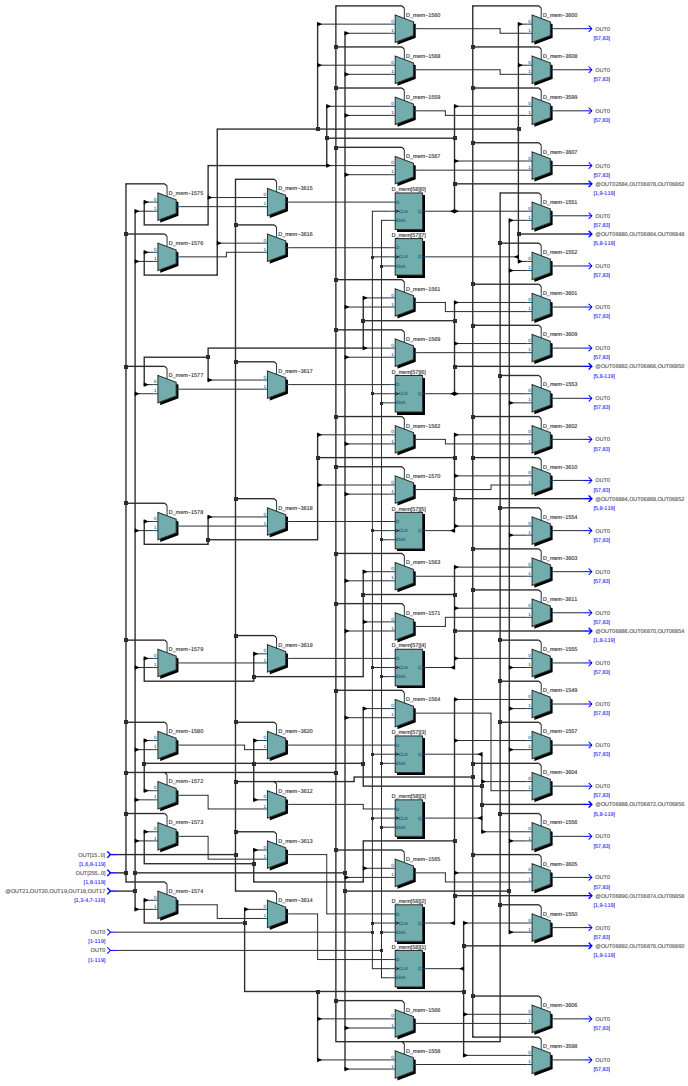
D_mem~1560
D_mem~1568
D_mem~1559
D_mem~1567
D_mem~1575
D_mem~1576
D_mem~1577
D_mem~1578
D_mem~1579
D_mem~1580
D_mem~1572
D_mem~1573
D_mem~1574
D_mem~3615
D_mem~3616
D_mem~3617
D_mem~3618
D_mem~3619
D_mem~3620
D_mem~3612
D_mem~3613
D_mem~3614
D_mem[1565]
D_mem[1573]
D_mem~1561
D_mem~1569
D_mem[1577]
D_mem~1562
D_mem~1570
D_mem[1578]
D_mem~1563
D_mem~1571
D_mem[1579]
D_mem~1564
D_mem[1580]
D_mem[1572]
D_mem[1565]
D_mem~1565
D_mem[1574]
D_mem[1566]
D_mem~1566
D_mem~1558
D_mem~3600
D_mem~3608
D_mem~3599
D_mem~3607
D_mem~1551
D_mem~1552
D_mem~3601
D_mem~3609
D_mem~1553
D_mem~3602
D_mem~3610
D_mem~1554
D_mem~3603
D_mem~3611
D_mem~1555
D_mem~1549
D_mem~1557
D_mem~3604
D_mem~1556
D_mem~3605
D_mem~1550
D_mem~3606
D_mem~3598
OUT0
[57,83]
@OUT0684,OUT0678,OUT0662
[1,9-119]
@OUT0680,OUT0664,OUT0648
[5,8-119]
@OUT0682,OUT0666,OUT0650
[5,8-119]
@OUT0684,OUT0668,OUT0652
[5,8-119]
@OUT0686,OUT0670,OUT0654
[1,8-119]
@OUT0688,OUT0672,OUT0656
[5,8-119]
@OUT0690,OUT0674,OUT0658
[1,9-119]
@OUT0692,OUT0676,OUT0660
[1,9-119]
OUT[15..0]
[1,6,8-119]
OUT[255..0]
[1,8-119]
@OUT21,OUT20,OUT19,OUT18,OUT17
[1,3-4,7-119]
OUT0
[1-119]
OUT0
[1-119]

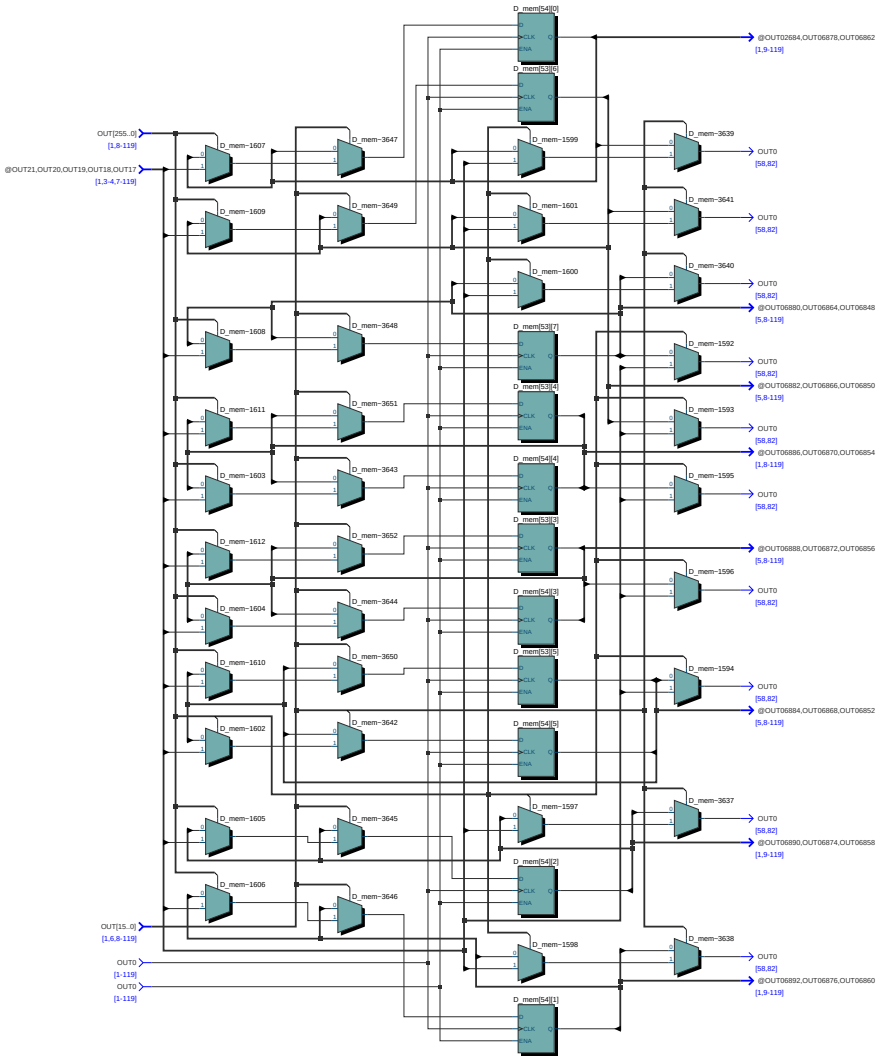
D_mem[54][0]
D_mem[53][6]
OUT[255..0]
[1,8-119]
@OUT21,OUT20,OUT19,OUT18,OUT17
[1,3-4,7-119]
D_mem~1607
D_mem~3647
D_mem~1599
D_mem~3639
OUT0
[58,82]
D_mem~1609
D_mem~3649
D_mem~1601
D_mem~3641
D_mem~1600
D_mem~3640
@OUT06880,OUT06864,OUT06848
[5,8-119]
D_mem~1608
D_mem~3648
D_mem[53][7]
D_mem~1592
@OUT06882,OUT06866,OUT06850
[5,8-119]
D_mem[53][4]
D_mem~1611
D_mem~3651
D_mem~1593
@OUT06886,OUT06870,OUT06854
[1,8-119]
D_mem~1603
D_mem~3643
D_mem[54][4]
D_mem~1595
D_mem[53][3]
D_mem~1612
D_mem~3652
@OUT06888,OUT06872,OUT06856
[5,8-119]
D_mem~1596
D_mem[54][3]
D_mem~1604
D_mem~3644
D_mem[53][5]
D_mem~1610
D_mem~3650
D_mem~1594
@OUT06884,OUT06868,OUT06852
[5,8-119]
D_mem~1602
D_mem~3642
D_mem[54][5]
D_mem~1597
D_mem~3637
@OUT06890,OUT06874,OUT06858
[1,9-119]
D_mem~1605
D_mem~3645
D_mem[54][2]
D_mem~1606
D_mem~3646
OUT[15..0]
[1,6,8-119]
D_mem~1598
D_mem~3638
@OUT06892,OUT06876,OUT06860
[1,9-119]
D_mem[54][1]
@OUT02684,OUT06878,OUT06862
[1,9-119]

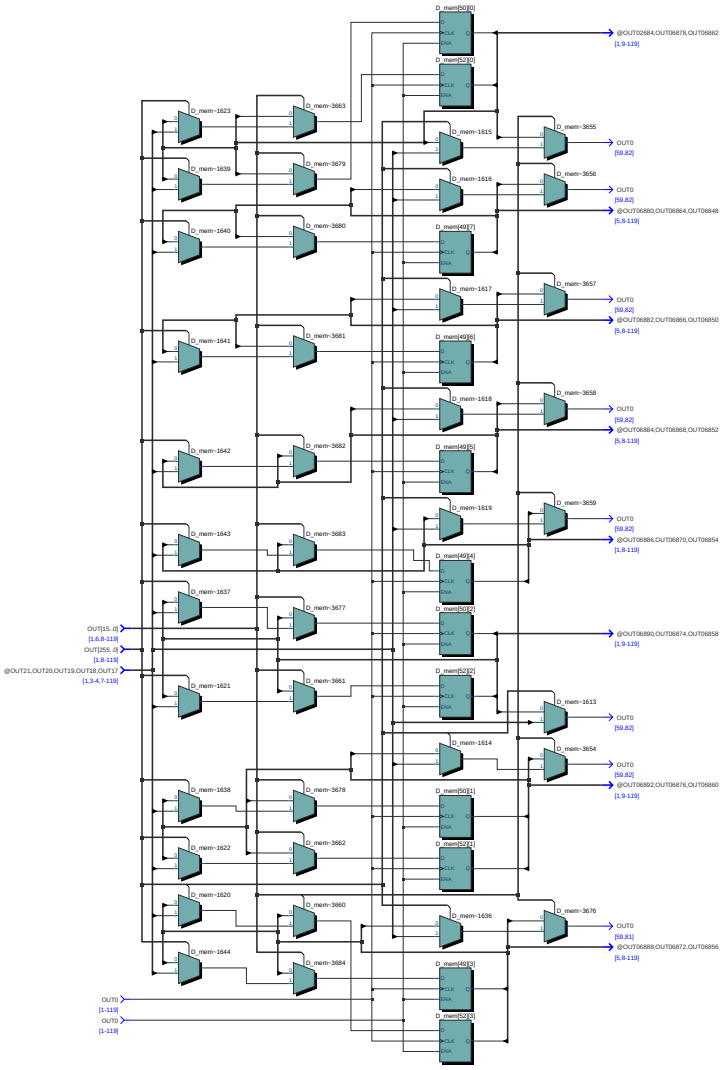
D_mem[50][0]
D_mem[52][0]
D_mem-1623
D_mem-3663
D_mem-1615
D_mem-3655
OUT0
[59,82]
D_mem-1639
D_mem-3679
D_mem-1616
D_mem-3656
OUT0
[59,82]
@OUT06880,OUT06864,OUT06848
[5,8-119]
D_mem-1640
D_mem-3680
D_mem[49][7]
D_mem-1617
D_mem-3657
OUT0
[59,82]
@OUT06882,OUT06866,OUT06850
[5,8-119]
D_mem-1641
D_mem-3681
D_mem[49][6]
D_mem-1618
D_mem-3658
OUT0
[59,82]
@OUT06884,OUT06868,OUT06852
[5,8-119]
D_mem-1642
D_mem-3682
D_mem[49][5]
D_mem-1619
D_mem-3659
OUT0
[59,82]
@OUT06886,OUT06870,OUT06854
[1,8-119]
D_mem-1643
D_mem-3683
D_mem[49][4]
D_mem-1637
D_mem-3677
D_mem[50][2]
@OUT06890,OUT06874,OUT06858
[1,9-119]
OUT[15..0]
[1,8,8-119]
OUT[255..0]
[1,8-119]
@OUT21,OUT20,OUT19,OUT18,OUT17
[1,3-4,7-119]
D_mem-1621
D_mem-3661
D_mem[52][2]
D_mem-1613
OUT0
[59,82]
D_mem-1614
D_mem-3654
OUT0
[59,82]
@OUT06892,OUT06876,OUT06860
[1,9-119]
D_mem-1638
D_mem-3678
D_mem[50][1]
D_mem-1622
D_mem-3662
D_mem[52][1]
D_mem-1620
D_mem-3660
D_mem-1636
D_mem-3676
OUT0
[59,81]
@OUT06888,OUT06872,OUT06856
[5,8-119]
D_mem-1644
D_mem-3684
D_mem[49][3]
OUT0
[1-119]
OUT0
[1-119]
D_mem[52][3]

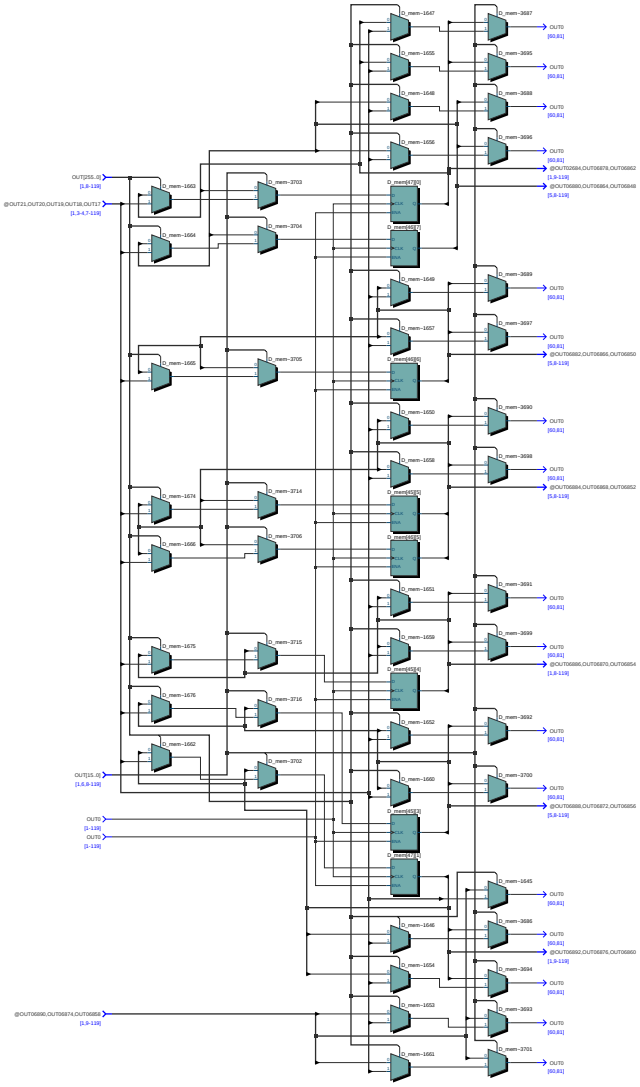
OUT[255..0]
[1,8-118]
@OUT21,OUT20,OUT18,OUT18,OUT17
[1,3-4,7-118]
OUT[15..0]
[1,6,8-118]
OUT0
[1-118]
OUT0
[1-118]
@OUT06890,OUT06874,OUT06858
[1,8-118]
D_mem~1663
D_mem~1664
D_mem~1669
D_mem~1674
D_mem~1656
D_mem~1675
D_mem~1676
D_mem~1662
D_mem~3703
D_mem~3704
D_mem~3705
D_mem~3714
D_mem~3706
D_mem~3715
D_mem~3716
D_mem~3702
D_mem~1647
D_mem~1655
D_mem~1648
D_mem~1656
D_mem[47][0]
D_mem[46][1]
D_mem~1649
D_mem~1657
D_mem[46][0]
D_mem~1650
D_mem~1658
D_mem[45][2]
D_mem[45][1]
D_mem~1651
D_mem~1659
D_mem[45][4]
D_mem~1652
D_mem~1660
D_mem[45][3]
D_mem[47][1]
D_mem~1645
D_mem~1646
D_mem~1654
D_mem~1653
D_mem~1661
D_mem~3687
D_mem~3695
D_mem~3688
D_mem~3696
D_mem~3689
D_mem~3697
D_mem~3690
D_mem~3698
D_mem~3691
D_mem~3699
D_mem~3692
D_mem~3700
D_mem~3685
D_mem~3693
D_mem~3701
OUT0
[60,81]
@OUT06894,OUT06878,OUT06862
[1,8-118]
@OUT06880,OUT06864,OUT06848
[1,8-118]
@OUT06882,OUT06866,OUT06850
[1,8-118]
@OUT06884,OUT06868,OUT06852
[1,8-118]
@OUT06886,OUT06870,OUT06854
[1,8-118]
@OUT06888,OUT06872,OUT06856
[1,8-118]
@OUT06892,OUT06876,OUT06860
[1,8-118]

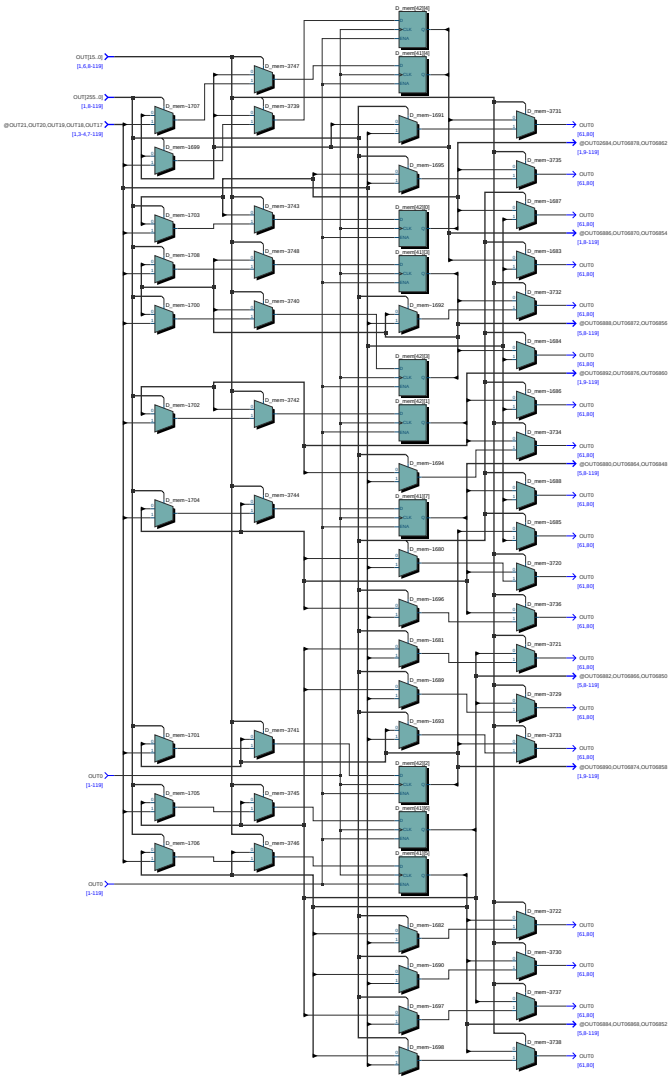
OUT[15..0]
[1,6,8-119]
OUT[255..0]
[1,8-119]
@OUT21,OUT20,OUT19,OUT18,OUT17
[1,3-4,7-119]
OUT0
[1-119]
OUT0
[1-119]
D_mem[42][0]
D_mem[41][0]
D_mem[42][1]
D_mem[41][1]
D_mem[42][2]
D_mem[41][2]
D_mem[42][3]
D_mem[41][3]
D_mem[42][4]
D_mem[41][4]
D_mem[42][5]
D_mem[41][5]
D_mem-3747
D_mem-1707
D_mem-3739
D_mem-1699
D_mem-1691
D_mem-3731
D_mem-1695
D_mem-3735
D_mem-1687
D_mem-1683
D_mem-3732
D_mem-1684
D_mem-1686
D_mem-3734
D_mem-1688
D_mem-1685
D_mem-3720
D_mem-3736
D_mem-3721
D_mem-3729
D_mem-3733
D_mem-3722
D_mem-3730
D_mem-3737
D_mem-3738
D_mem-1703
D_mem-3743
D_mem-1708
D_mem-3748
D_mem-1700
D_mem-3740
D_mem-1692
D_mem-1702
D_mem-3742
D_mem-1694
D_mem-1704
D_mem-3744
D_mem-1680
D_mem-1696
D_mem-1681
D_mem-1689
D_mem-1693
D_mem-1701
D_mem-3741
D_mem-1705
D_mem-3745
D_mem-1706
D_mem-3746
D_mem-1682
D_mem-1690
D_mem-1697
D_mem-1698
CLK
DIN
DOUT
OUT0
[61,80]
@OUT03694,OUT06878,OUT06862
[1,9-119]
@OUT06886,OUT06870,OUT06854
[1,8-119]
@OUT06888,OUT06872,OUT06856
[5,8-119]
@OUT06892,OUT06876,OUT06860
[1,9-119]
@OUT06890,OUT06864,OUT06848
[5,8-119]
@OUT06882,OUT06866,OUT06850
[5,8-119]
@OUT06890,OUT06874,OUT06858
[1,9-119]
@OUT06884,OUT06868,OUT06852
[5,8-119]

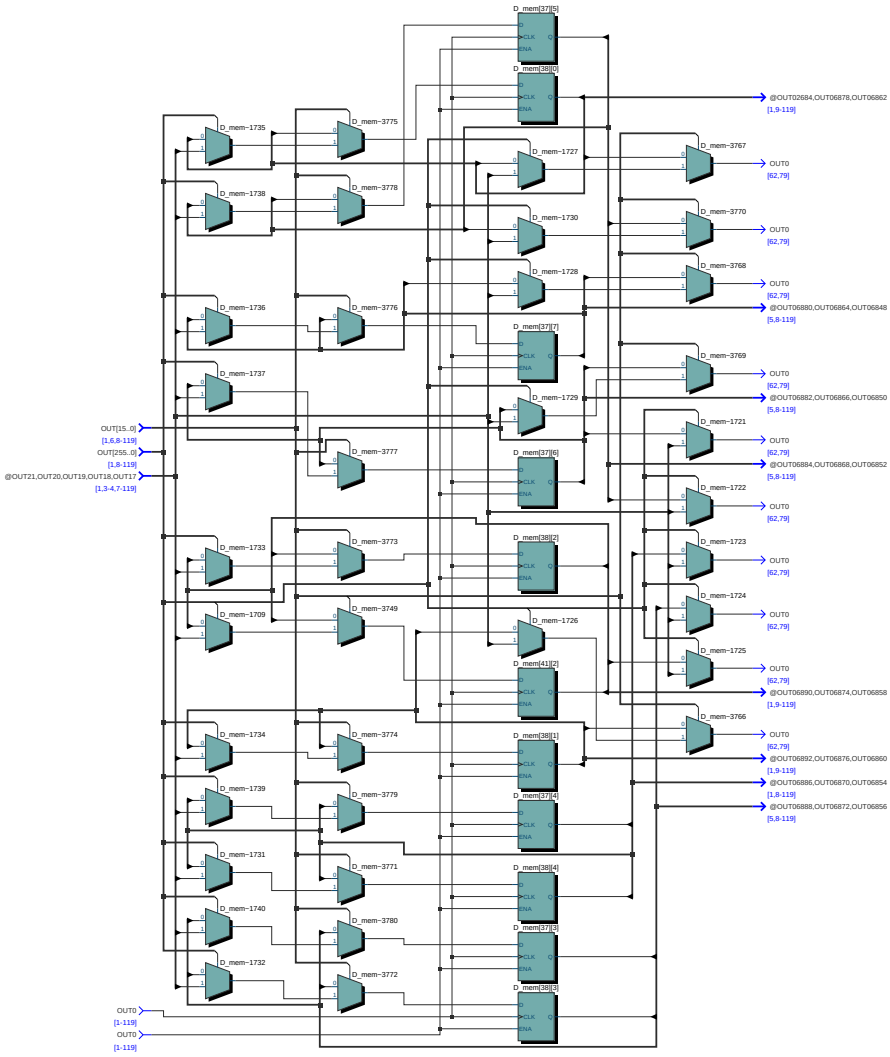
D_mem[37][5]
D_mem[38][0]
@OUT02684,OUT06878,OUT06862
[1,9-119]
D_mem-1735
D_mem-3775
D_mem-1727
D_mem-3767
OUT0
[62,79]
D_mem-1738
D_mem-3778
D_mem-1730
D_mem-3770
OUT0
[62,79]
D_mem-1728
D_mem-3768
OUT0
[62,79]
@OUT06880,OUT06864,OUT06848
[5,8-119]
D_mem-1736
D_mem-3776
D_mem[37][7]
D_mem-3769
OUT0
[62,79]
@OUT06882,OUT06866,OUT06850
[5,8-119]
D_mem-1737
D_mem-1729
D_mem-1721
OUT0
[62,79]
@OUT06884,OUT06868,OUT06852
[5,8-119]
OUT[15..0]
[1,6,8-119]
OUT[255..0]
[1,8-119]
@OUT21,OUT20,OUT19,OUT18,OUT17
[1,3-4,7-119]
D_mem-3777
D_mem[37][6]
D_mem-1722
OUT0
[62,79]
D_mem-1733
D_mem-3773
D_mem[38][2]
D_mem-1723
OUT0
[62,79]
D_mem-1709
D_mem-3749
D_mem-1726
D_mem-1724
OUT0
[62,79]
D_mem-1725
OUT0
[62,79]
@OUT06890,OUT06874,OUT06858
[1,9-119]
D_mem[41][2]
D_mem-3766
OUT0
[62,79]
@OUT06892,OUT06876,OUT06860
[1,9-119]
@OUT06886,OUT06870,OUT06854
[1,8-119]
@OUT06888,OUT06872,OUT06856
[5,8-119]
D_mem-1734
D_mem-3774
D_mem[38][1]
D_mem-1739
D_mem-3779
D_mem[37][4]
D_mem-1731
D_mem-3771
D_mem[38][4]
D_mem-1740
D_mem-3780
D_mem[37][3]
D_mem-1732
D_mem-3772
D_mem[38][3]
OUT0
[1-119]
OUT0
[1-119]

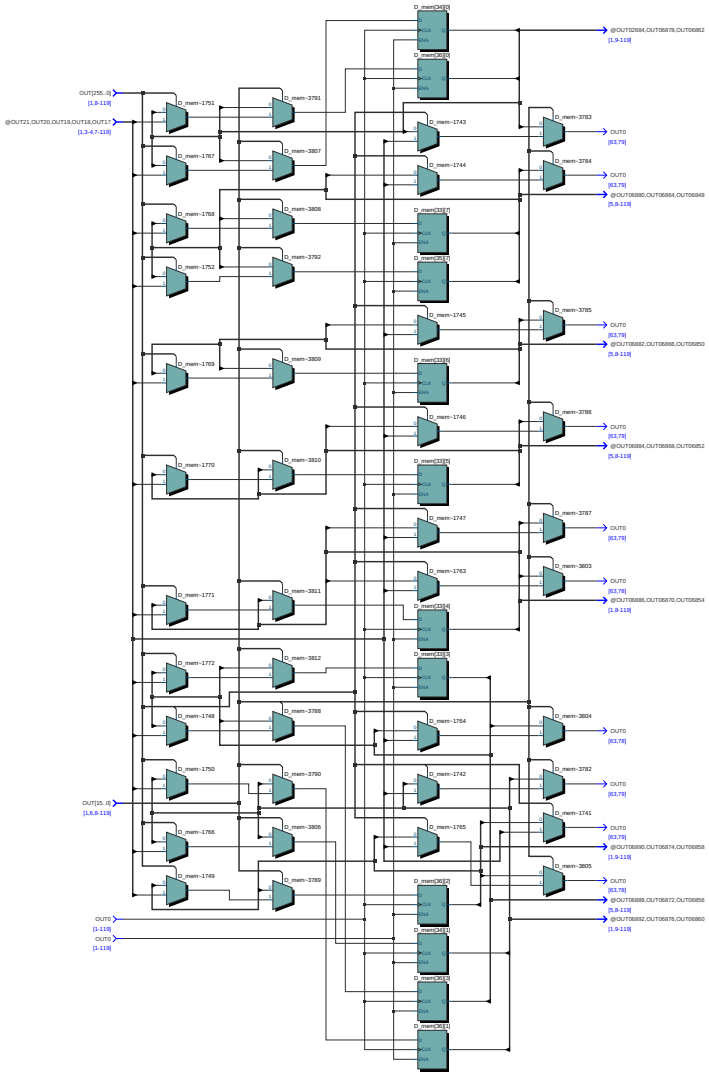
D_mem[340]0
@OUT02684,OUT06878,OUT06862
[1,8-11]
OUT[255..0]
[1,8-11]
@OUT21,OUT20,OUT19,OUT18,OUT17
[1,3-4,7-11]
D_mem-1751
D_mem-3791
D_mem[341]0
D_mem-1743
D_mem-3783
OUT0
[63,79]
D_mem-1767
D_mem-3807
D_mem-1744
D_mem-3784
OUT0
[63,79]
@OUT06880,OUT06864,OUT06848
[5,8-11]
D_mem-1769
D_mem-3808
D_mem[337]1
D_mem[342]1
D_mem-1752
D_mem-3792
D_mem-1745
D_mem-3785
OUT0
[63,79]
@OUT06882,OUT06866,OUT06850
[5,8-11]
D_mem-1769
D_mem-3809
D_mem[338]0
D_mem-1746
D_mem-3786
OUT0
[63,79]
@OUT06884,OUT06868,OUT06852
[5,8-11]
D_mem-1770
D_mem-3810
D_mem[339]0
D_mem-1747
D_mem-3787
OUT0
[63,79]
D_mem-1763
D_mem-3803
OUT0
[63,78]
@OUT06886,OUT06870,OUT06854
[1,8-11]
D_mem-1771
D_mem-3811
D_mem[334]4
D_mem[343]1
D_mem-1772
D_mem-3812
D_mem-1768
D_mem-3788
D_mem-1764
D_mem-3804
OUT0
[63,78]
D_mem-1750
D_mem-3790
D_mem-1742
D_mem-3782
OUT0
[63,79]
OUT[15..0]
[1,6,8-11]
D_mem-1741
OUT0
[63,79]
@OUT06890,OUT06874,OUT06858
[1,9-11]
D_mem-1766
D_mem-3806
D_mem-1765
D_mem-3805
OUT0
[63,78]
@OUT06888,OUT06872,OUT06856
[5,9-11]
@OUT06892,OUT06876,OUT06860
[1,9-11]
D_mem-1749
D_mem-3789
D_mem[336]2
D_mem[344]1
D_mem[335]1
D_mem[340]1
OUT0
[1-11]
OUT0
[1-11]

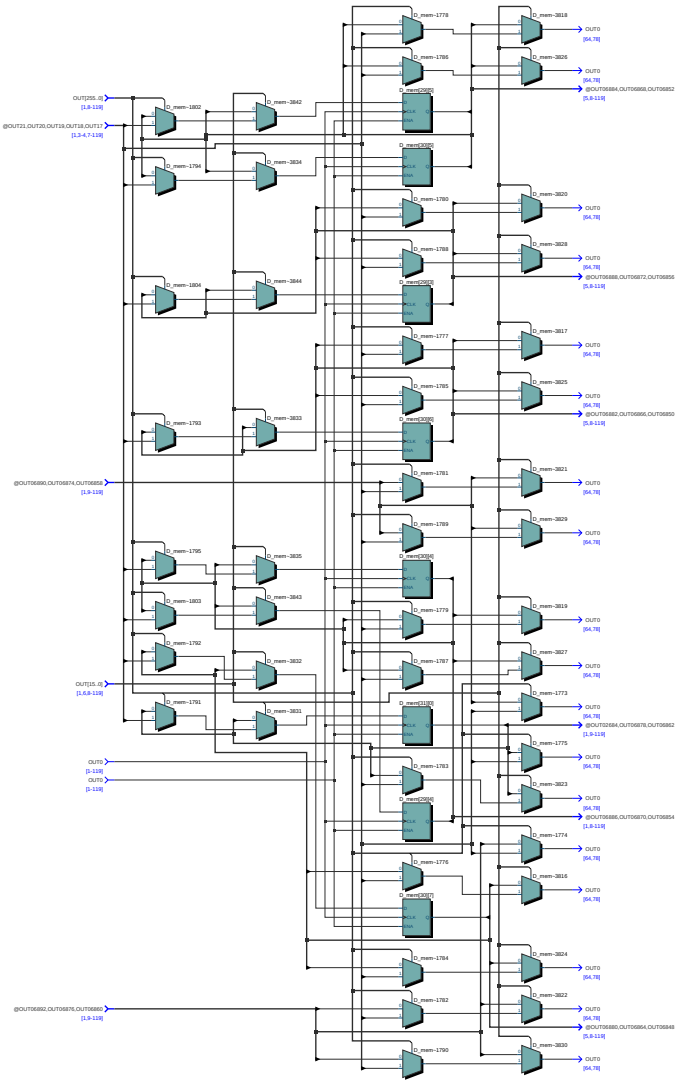
OUT[255..0]
[1,8-119]
@OUT21,OUT20,OUT19,OUT18,OUT17
[1,2-4,7-119]
@OUT06890,OUT06874,OUT06858
[1,9-119]
OUT[15..0]
[1,6,8-119]
OUT2
[1-119]
OUT0
[1-119]
@OUT06892,OUT06876,OUT06860
[1,9-119]
D_mem~1778
D_mem~1786
D_mem[2048]
D_mem[3072]
D_mem~1802
D_mem~3842
D_mem~1794
D_mem~3834
D_mem~1780
D_mem~1788
D_mem[2056]
D_mem~1804
D_mem~3844
D_mem~1777
D_mem~1785
D_mem[3080]
D_mem~1793
D_mem~3833
D_mem~1781
D_mem~1789
D_mem[3088]
D_mem~1795
D_mem~3835
D_mem~1803
D_mem~3843
D_mem~1779
D_mem~1787
D_mem[3112]
D_mem~1792
D_mem~3832
D_mem~1791
D_mem~3831
D_mem~1783
D_mem[2064]
D_mem~1776
D_mem[3072]
D_mem~1784
D_mem~1782
D_mem~1790
D_mem~3818
D_mem~3826
D_mem~3820
D_mem~3828
D_mem~3817
D_mem~3825
D_mem~3821
D_mem~3829
D_mem~3819
D_mem~3827
D_mem~1773
D_mem~1775
D_mem~3823
D_mem~1774
D_mem~3816
D_mem~3824
D_mem~3822
D_mem~3830
CLK
DIN
OUT0
[64,78]
@OUT06884,OUT06868,OUT06852
[5,8-119]
@OUT06888,OUT06872,OUT06856
[5,8-119]
@OUT06882,OUT06866,OUT06850
[5,8-119]
@OUT02684,OUT06878,OUT06862
[1,9-119]
@OUT06886,OUT06870,OUT06854
[1,8-119]
@OUT06880,OUT06864,OUT06848
[5,8-119]

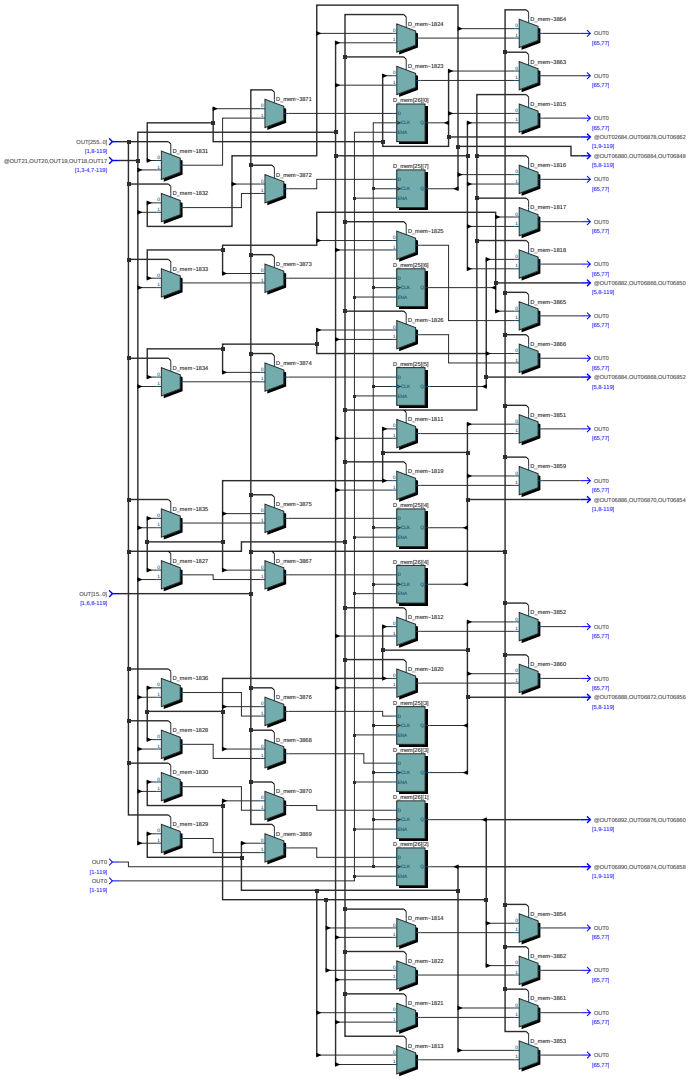
OUT[25..0]
[1,8-119]
@OUT21,OUT20,OUT19,OUT18,OUT17
[1,3-4,7-119]
OUT[15..0]
[1,8-119]
OUT0
[1-119]
OUT0
[1-119]
D_mem~1824
D_mem~1823
D_mem~1815
D_mem~1816
D_mem~1817
D_mem~1818
D_mem~1865
D_mem~1866
D_mem~1851
D_mem~1859
D_mem~1852
D_mem~1860
D_mem~1854
D_mem~1862
D_mem~1861
D_mem~1853
D_mem~1814
D_mem~1822
D_mem~1821
D_mem~1813
D_mem~1811
D_mem~1819
D_mem~1812
D_mem~1820
D_mem~1831
D_mem~1832
D_mem~1833
D_mem~1834
D_mem~1835
D_mem~1827
D_mem~1836
D_mem~1828
D_mem~1830
D_mem~1829
D_mem~1871
D_mem~1872
D_mem~1873
D_mem~1874
D_mem~1875
D_mem~1867
D_mem~1876
D_mem~1868
D_mem~1870
D_mem~1869
D_mem[26][0]
D_mem[25][7]
D_mem~1825
D_mem[25][6]
D_mem~1826
D_mem[25][5]
D_mem[25][4]
D_mem[25][3]
D_mem[25][2]
D_mem[25][1]
D_mem[25][0]
CLK
ENA
OUT0
[65,77]
@OUT02694,OUT06878,OUT06862
[1,9-119]
@OUT06880,OUT06864,OUT06848
[5,8-119]
@OUT06882,OUT06866,OUT06850
[5,8-119]
@OUT06884,OUT06868,OUT06852
[5,8-119]
@OUT06886,OUT06870,OUT06854
[1,8-119]
@OUT06888,OUT06872,OUT06856
[5,8-119]
@OUT06892,OUT06876,OUT06860
[1,9-119]
@OUT06890,OUT06874,OUT06858
[1,9-119]

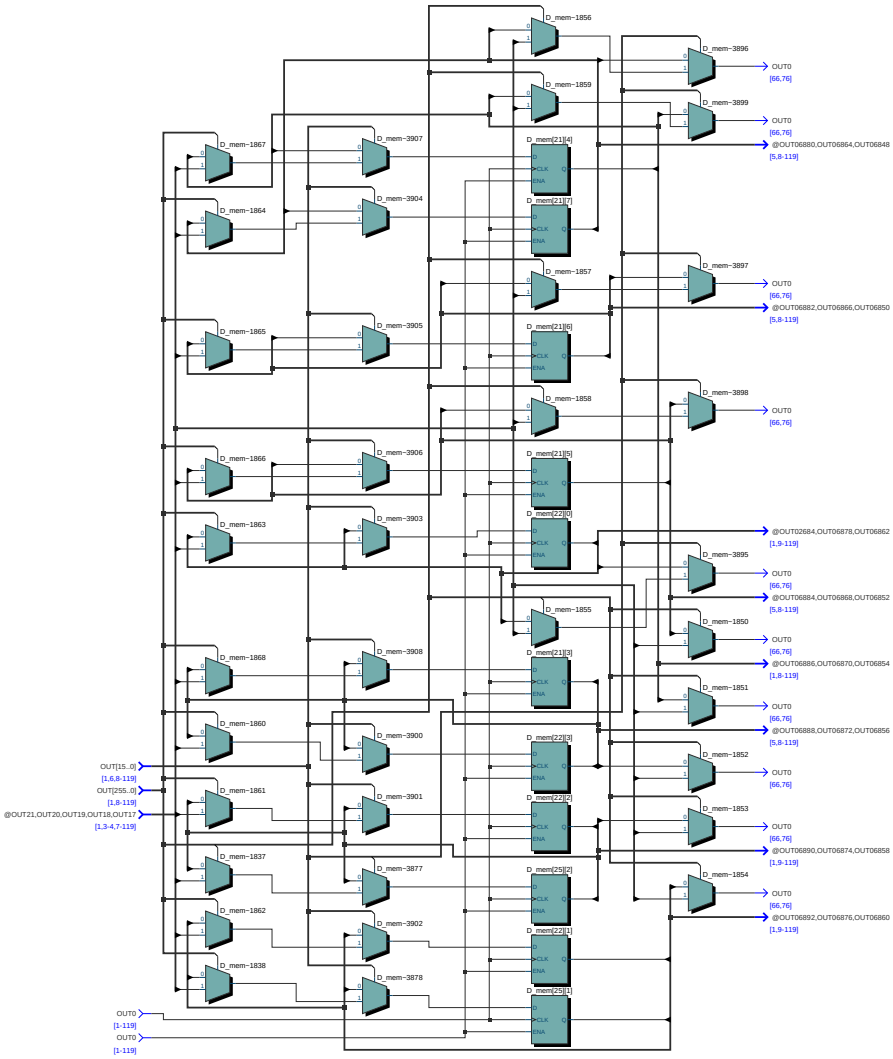
D_mem~1856
D_mem~3896
OUT0
[66,76]
D_mem~1859
D_mem~3899
OUT0
[66,76]
@OUT06880,OUT06864,OUT06848
[5,8-119]
D_mem~1867
D_mem~3907
D_mem[21][4]
D_mem~1864
D_mem~3904
D_mem[21][7]
D_mem~1857
D_mem~3897
OUT0
[66,76]
@OUT06882,OUT06866,OUT06850
[5,8-119]
D_mem~1865
D_mem~3905
D_mem[21][6]
D_mem~1858
D_mem~3898
OUT0
[66,76]
D_mem~1866
D_mem~3906
D_mem[21][5]
D_mem[22][0]
D_mem~1863
D_mem~3903
@OUT02684,OUT06878,OUT06862
[1,9-119]
D_mem~3895
OUT0
[66,76]
@OUT06884,OUT06868,OUT06852
[5,8-119]
D_mem~1855
D_mem~1850
OUT0
[66,76]
@OUT06886,OUT06870,OUT06854
[1,8-119]
D_mem~1868
D_mem~3908
D_mem[21][3]
D_mem~1851
OUT0
[66,76]
@OUT06888,OUT06872,OUT06856
[5,8-119]
D_mem~1860
D_mem~3900
D_mem[22][3]
D_mem~1852
OUT0
[66,76]
OUT[15..0]
[1,6,8-119]
OUT[255..0]
[1,8-119]
@OUT21,OUT20,OUT19,OUT18,OUT17
[1,3-4,7-119]
D_mem~1861
D_mem~3901
D_mem[22][4]
D_mem~1853
OUT0
[66,76]
@OUT06890,OUT06874,OUT06858
[1,9-119]
D_mem~1837
D_mem~3877
D_mem[25][2]
D_mem~1854
OUT0
[66,76]
@OUT06892,OUT06876,OUT06860
[1,9-119]
D_mem~1862
D_mem~3902
D_mem[22][1]
D_mem~1838
D_mem~3878
D_mem[25][1]
OUT0
[1-119]
OUT0
[1-119]

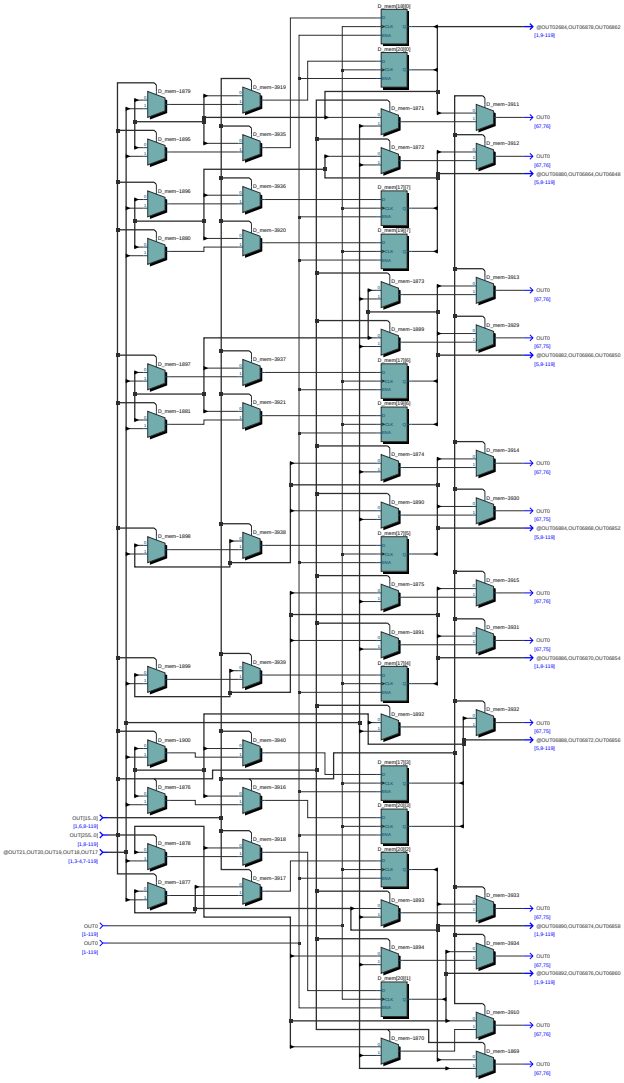
D_mem[1820]
D_mem[2032]
D_mem[1879]
D_mem–3919
D_mem–1871
D_mem–3911
D_mem–1895
D_mem–3935
D_mem–1872
D_mem–3912
D_mem–1896
D_mem–3936
D_mem[1707]
D_mem–1880
D_mem–3920
D_mem[1543]
D_mem–1873
D_mem–3913
D_mem–1889
D_mem–3929
D_mem–1897
D_mem–3937
D_mem[1708]
D_mem–1881
D_mem–3921
D_mem[1544]
D_mem–1874
D_mem–3914
D_mem–1890
D_mem–3930
D_mem[1709]
D_mem–1898
D_mem–3938
D_mem–1875
D_mem–3915
D_mem–1891
D_mem–3931
D_mem[1710]
D_mem–1899
D_mem–3939
D_mem–1892
D_mem–3932
D_mem–1900
D_mem–3940
D_mem[1711]
D_mem–1876
D_mem–3916
D_mem[2031]
D_mem[2033]
D_mem–1878
D_mem–3918
D_mem–1877
D_mem–3917
D_mem–1893
D_mem–3933
D_mem–1894
D_mem–3934
D_mem[2034]
D_mem–3910
D_mem–1879
D_mem–1869
@OUT02684,OUT06878,OUT06862
[1,9-113]
CUT0
[67,76]
@OUT06880,OUT06864,OUT06848
[5,9-113]
@OUT06882,OUT06866,OUT06850
[5,9-113]
@OUT06884,OUT06868,OUT06852
[5,9-113]
@OUT06886,OUT06870,OUT06854
[1,9-113]
@OUT06888,OUT06872,OUT06856
[5,9-113]
@OUT06890,OUT06874,OUT06858
[1,9-113]
@OUT06892,OUT06876,OUT06860
[1,9-113]
OUT0[15..0]
[1,4,9-113]
OUT2[55..0]
[1,9-113]
@OUT21,OUT20,OUT19,OUT18,OUT17
[1,3-4,7-113]
OUT0
[1-113]
OUT0
[1-113]

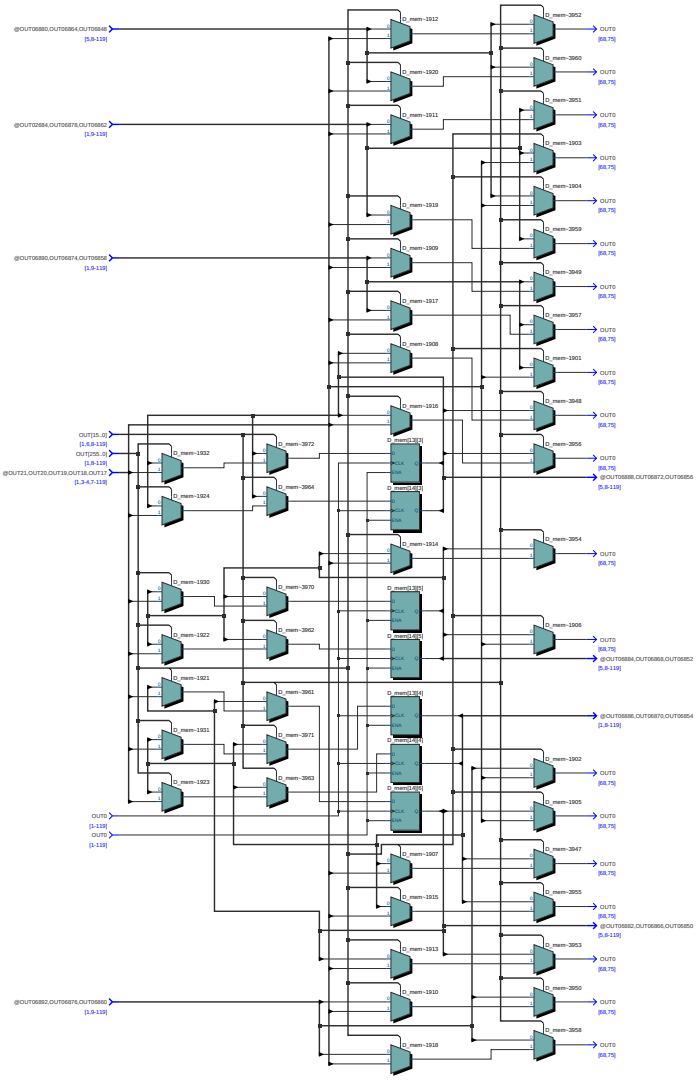
@OUT06880,OUT06864,OUT06848
[5,8-119]
@OUT02684,OUT06878,OUT06862
[1,9-119]
@OUT06890,OUT06874,OUT06858
[1,9-119]
OUT[15..0]
[1,6,8-119]
OUT[255..0]
[1,9-119]
@OUT21,OUT20,OUT19,OUT18,OUT17
[1,3-4,7-118]
OUT0
[1-119]
OUT0
[1-119]
@OUT06892,OUT06876,OUT06860
[1,9-119]
D_mem-1912
D_mem-1920
D_mem-1911
D_mem-1919
D_mem-1909
D_mem-1917
D_mem-1908
D_mem-1916
D_mem-1932
D_mem-3972
D_mem-3964
D_mem-1924
D_mem-1914
D_mem-1930
D_mem-3970
D_mem-3962
D_mem-1922
D_mem-1921
D_mem-3961
D_mem-1931
D_mem-3971
D_mem-3963
D_mem-1923
D_mem-1907
D_mem-1915
D_mem-1913
D_mem-1910
D_mem-1918
D_mem-3952
D_mem-3960
D_mem-3951
D_mem-1903
D_mem-1904
D_mem-3959
D_mem-3949
D_mem-3957
D_mem-1901
D_mem-3948
D_mem-3956
@OUT06888,OUT06872,OUT06856
[5,8-119]
D_mem-3954
D_mem-1906
@OUT06884,OUT06868,OUT06852
[5,8-119]
@OUT06886,OUT06870,OUT06854
[1,8-119]
D_mem-1902
D_mem-1905
D_mem-3947
D_mem-3955
@OUT06882,OUT06866,OUT06850
[5,8-119]
D_mem-3953
D_mem-3950
D_mem-3958
OUT0
[68,75]

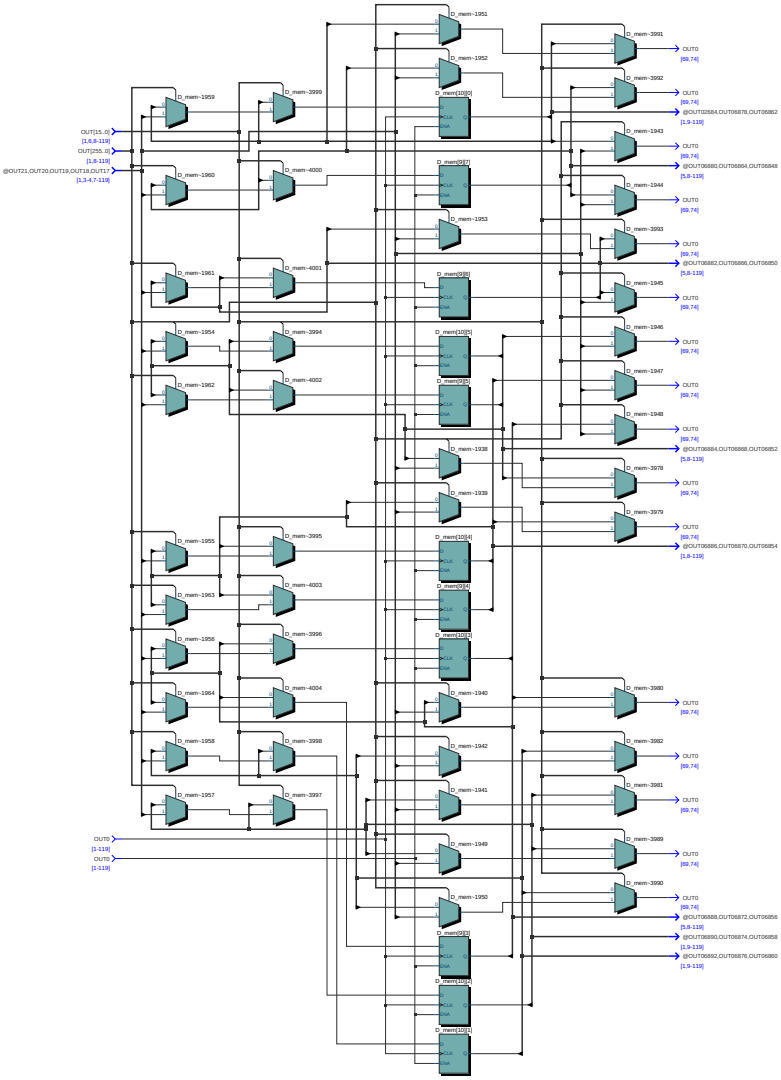
OUT[15..0]
[1,8-119]
OUT[255..0]
[1,8-119]
@OUT21,OUT20,OUT19,OUT18,OUT17
[1,3-4,7-119]
OUT5
[1-119]
OUT0
[1-119]
D_mem-1951
D_mem-1952
D_mem[10][6]
D_mem[0][7]
D_mem-1953
D_mem[0][6]
D_mem[10][5]
D_mem[0][5]
D_mem-1938
D_mem-1939
D_mem[10][4]
D_mem[0][4]
D_mem[10][3]
D_mem-1940
D_mem-1942
D_mem-1941
D_mem-1949
D_mem-1950
D_mem[0][3]
D_mem[10][2]
D_mem[10][1]
D_mem-3999
D_mem-4000
D_mem-4001
D_mem-3994
D_mem-4002
D_mem-3995
D_mem-4003
D_mem-3996
D_mem-4004
D_mem-3998
D_mem-3997
D_mem-1959
D_mem-1960
D_mem-1961
D_mem-1954
D_mem-1962
D_mem-1955
D_mem-1963
D_mem-1956
D_mem-1964
D_mem-1958
D_mem-1957
D_mem-3991
D_mem-3992
D_mem-1943
D_mem-1944
D_mem-3993
D_mem-1945
D_mem-1946
D_mem-1947
D_mem-1948
D_mem-3978
D_mem-3979
D_mem-3980
D_mem-3982
D_mem-3981
D_mem-3989
D_mem-3990
CUT0
[69,74]
@OUT6884,OUT6878,OUT6862
[1,9-119]
@OUT6880,OUT6864,OUT6848
[5,8-119]
@OUT6882,OUT6866,OUT6850
[5,8-119]
@OUT6884,OUT6868,OUT6852
[5,8-119]
@OUT6886,OUT6870,OUT6854
[1,8-119]
@OUT6888,OUT6872,OUT6856
[5,8-119]
@OUT6890,OUT6874,OUT6858
[1,9-119]
@OUT6892,OUT6876,OUT6860
[1,3-119]

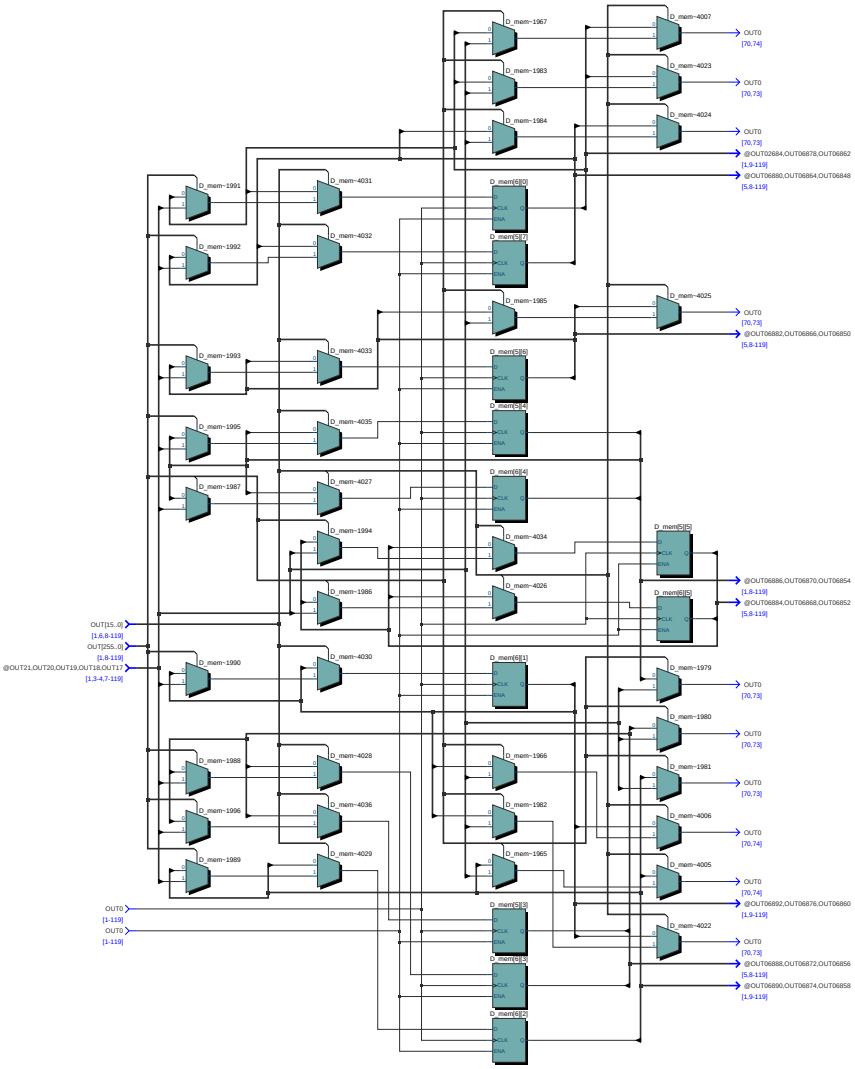
D_mem~1967
D_mem~1983
D_mem~1984
D_mem~4007
D_mem~4023
D_mem~4024
OUT0
[70,74]
OUT0
[70,73]
OUT0
[70,73]
@OUT06884,OUT06878,OUT06862
[1,9-119]
@OUT06880,OUT06864,OUT06848
[5,8-119]
D_mem~1991
D_mem~1992
D_mem~4031
D_mem~4032
D_mem[6][0]
D_mem[5][1]
D_mem~1985
D_mem~4025
OUT0
[70,73]
@OUT06882,OUT06866,OUT06850
[5,8-119]
D_mem~1993
D_mem~4033
D_mem[5][6]
D_mem[5][4]
D_mem~1995
D_mem~4035
D_mem~1987
D_mem~4027
D_mem[6][4]
D_mem~1994
D_mem~4034
D_mem[5][5]
@OUT06886,OUT06870,OUT06854
[1,8-119]
D_mem~1986
D_mem~4026
D_mem[6][5]
@OUT06884,OUT06868,OUT06852
[5,8-119]
OUT[15..0]
[1,6,8-119]
OUT[255..0]
[1,8-119]
@OUT21,OUT20,OUT19,OUT18,OUT17
[1,3-4,7-119]
D_mem~1990
D_mem~4030
D_mem[6][1]
D_mem~1979
OUT0
[70,73]
D_mem~1980
OUT0
[70,73]
D_mem~1988
D_mem~4028
D_mem~1966
D_mem~1981
OUT0
[70,73]
D_mem~1996
D_mem~4036
D_mem~1982
D_mem~4006
OUT0
[70,74]
D_mem~1989
D_mem~4029
D_mem~1965
D_mem~4005
OUT0
[70,74]
@OUT06892,OUT06876,OUT06860
[1,9-119]
OUT0
[1-119]
OUT0
[1-119]
D_mem[5][3]
D_mem~4022
OUT0
[70,73]
D_mem[6][3]
@OUT06888,OUT06872,OUT06856
[5,8-119]
D_mem[6][2]
@OUT06890,OUT06874,OUT06858
[1,9-119]

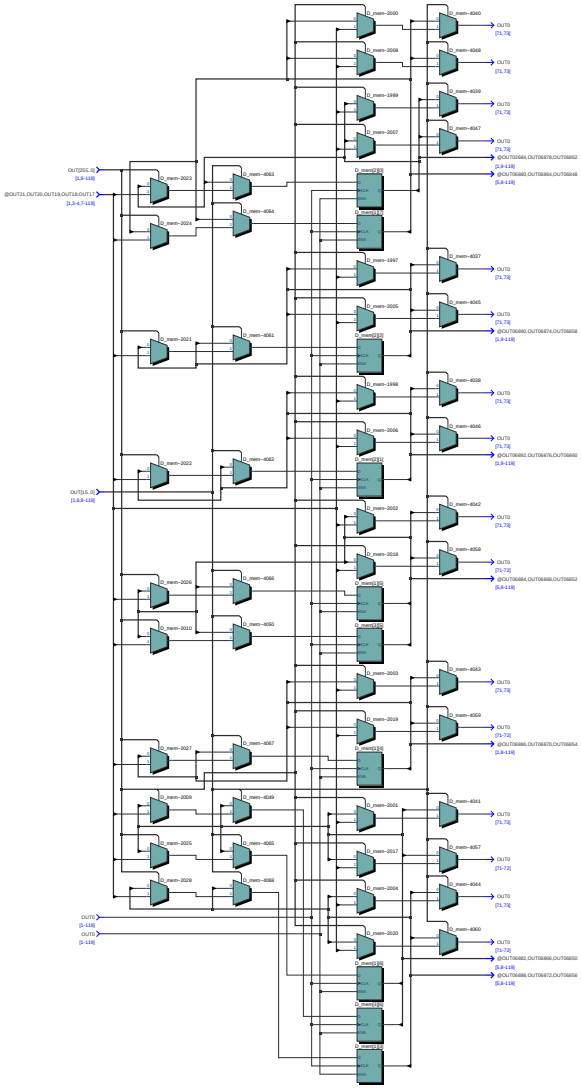
OUT[55:0]
[1,8-118]
@OUT21,OUT26,OUT14,OUT16,OUT17
[1,3-4,7-118]
OUT[15:0]
[1,6,8-118]
OUT0
[1-118]
OUT0
[1-118]
D_mem~2023
D_mem~2024
D_mem~2021
D_mem~2022
D_mem~2026
D_mem~2010
D_mem~2027
D_mem~2009
D_mem~2025
D_mem~2028
D_mem~4063
D_mem~4064
D_mem~4061
D_mem~4062
D_mem~4066
D_mem~4050
D_mem~4067
D_mem~4049
D_mem~4065
D_mem~4068
D_mem~2000
D_mem~2008
D_mem~1999
D_mem~2007
D_mem~1997
D_mem~2005
D_mem~1998
D_mem~2006
D_mem~2002
D_mem~2018
D_mem~2003
D_mem~2019
D_mem~2001
D_mem~2017
D_mem~2004
D_mem~2020
D_mem~4040
D_mem~4048
D_mem~4039
D_mem~4047
D_mem~4037
D_mem~4045
D_mem~4038
D_mem~4046
D_mem~4042
D_mem~4058
D_mem~4043
D_mem~4059
D_mem~4041
D_mem~4057
D_mem~4044
D_mem~4060
OUT0
[71,72]
@OUT02484,OUT06476,OUT06462
[1,8-118]
@OUT06480,OUT06464,OUT06448
[1,6-118]
@OUT06490,OUT06474,OUT06458
[1,8-118]
@OUT06492,OUT06476,OUT06460
[1,8-118]
@OUT06484,OUT06468,OUT06452
[1,8-118]
@OUT06486,OUT06470,OUT06454
[1,8-118]
@OUT06482,OUT06466,OUT06450
[1,8-118]
@OUT06488,OUT06472,OUT06456
[1,8-118]

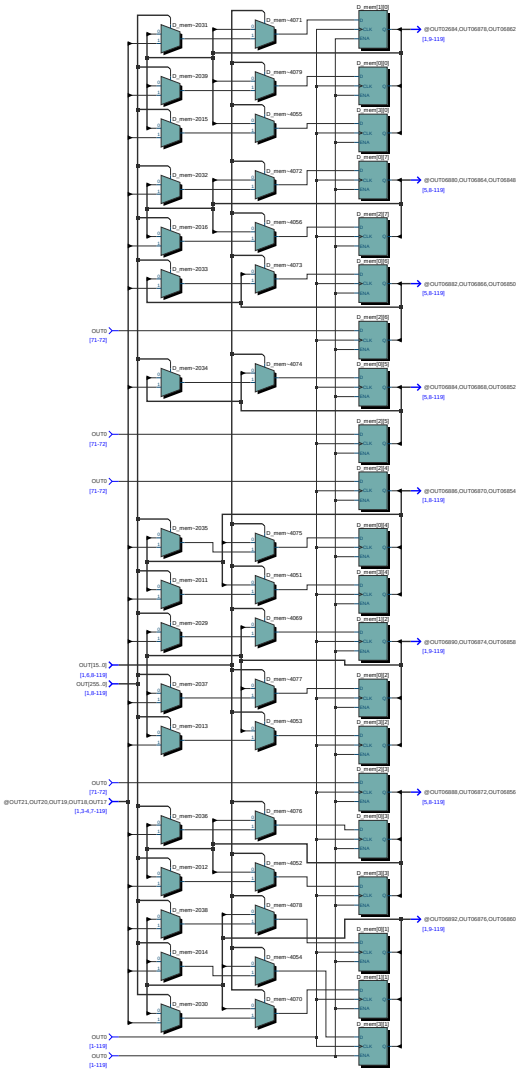
D_mem-2031
D_mem-2029
D_mem-2015
D_mem-2032
D_mem-2016
D_mem-2033
D_mem-2034
D_mem-2035
D_mem-2011
D_mem-2029
D_mem-2037
D_mem-2013
D_mem-2036
D_mem-2012
D_mem-2038
D_mem-2014
D_mem-2030
D_mem-4071
D_mem-4079
D_mem-4055
D_mem-4072
D_mem-4056
D_mem-4073
D_mem-4074
D_mem-4075
D_mem-4051
D_mem-4069
D_mem-4077
D_mem-4053
D_mem-4076
D_mem-4052
D_mem-4078
D_mem-4054
D_mem-4070
D_mem[189]
D_mem[188]
D_mem[187]
D_mem[186]
D_mem[185]
D_mem[184]
D_mem[183]
D_mem[182]
D_mem[181]
D_mem[180]
D_mem[179]
D_mem[178]
D_mem[177]
D_mem[176]
D_mem[175]
D_mem[174]
D_mem[173]
D_mem[172]
D_mem[171]
D_mem[170]
D_mem[169]
D_mem[168]
D_mem[167]
D_mem[166]
D_mem[165]
D_mem[164]
D_mem[163]
D_mem[162]
D_mem[161]
D_mem[160]
D_mem[159]
D_mem[158]
D_mem[157]
D_mem[156]
D_mem[155]
D_mem[154]
D_mem[153]
D_mem[152]
D_mem[151]
D_mem[150]
D_mem[149]
D_mem[148]
D_mem[147]
D_mem[146]
D_mem[145]
D_mem[144]
D_mem[143]
D_mem[142]
D_mem[141]
D_mem[140]
D_mem[139]
D_mem[138]
D_mem[137]
D_mem[136]
D_mem[135]
D_mem[134]
D_mem[133]
D_mem[132]
D_mem[131]
D_mem[130]
D_mem[129]
D_mem[128]
D_mem[127]
D_mem[126]
D_mem[125]
D_mem[124]
D_mem[123]
D_mem[122]
D_mem[121]
D_mem[120]
D_mem[119]
D_mem[118]
D_mem[117]
D_mem[116]
D_mem[115]
D_mem[114]
D_mem[113]
D_mem[112]
D_mem[111]
D_mem[110]
D_mem[109]
D_mem[108]
D_mem[107]
D_mem[106]
D_mem[105]
D_mem[104]
D_mem[103]
D_mem[102]
D_mem[101]
D_mem[100]
D_mem[99]
D_mem[98]
D_mem[97]
D_mem[96]
D_mem[95]
D_mem[94]
D_mem[93]
D_mem[92]
D_mem[91]
D_mem[90]
D_mem[89]
D_mem[88]
D_mem[87]
D_mem[86]
D_mem[85]
D_mem[84]
D_mem[83]
D_mem[82]
D_mem[81]
D_mem[80]
D_mem[79]
D_mem[78]
D_mem[77]
D_mem[76]
D_mem[75]
D_mem[74]
D_mem[73]
D_mem[72]
D_mem[71]
D_mem[70]
D_mem[69]
D_mem[68]
D_mem[67]
D_mem[66]
D_mem[65]
D_mem[64]
D_mem[63]
D_mem[62]
D_mem[61]
D_mem[60]
D_mem[59]
D_mem[58]
D_mem[57]
D_mem[56]
D_mem[55]
D_mem[54]
D_mem[53]
D_mem[52]
D_mem[51]
D_mem[50]
D_mem[49]
D_mem[48]
D_mem[47]
D_mem[46]
D_mem[45]
D_mem[44]
D_mem[43]
D_mem[42]
D_mem[41]
D_mem[40]
D_mem[39]
D_mem[38]
D_mem[37]
D_mem[36]
D_mem[35]
D_mem[34]
D_mem[33]
D_mem[32]
D_mem[31]
D_mem[30]
D_mem[29]
D_mem[28]
D_mem[27]
D_mem[26]
D_mem[25]
D_mem[24]
D_mem[23]
D_mem[22]
D_mem[21]
D_mem[20]
D_mem[19]
D_mem[18]
D_mem[17]
D_mem[16]
D_mem[15]
D_mem[14]
D_mem[13]
D_mem[12]
D_mem[11]
D_mem[10]
D_mem[9]
D_mem[8]
D_mem[7]
D_mem[6]
D_mem[5]
D_mem[4]
D_mem[3]
D_mem[2]
D_mem[1]
D_mem[0]
CLK
DIN
Q
@OUT02684,OUT06878,OUT06862
[1,9-119]
@OUT06880,OUT06864,OUT06848
[5,8-119]
@OUT06882,OUT06866,OUT06850
[5,8-119]
@OUT06884,OUT06868,OUT06852
[5,8-119]
@OUT06886,OUT06870,OUT06854
[1,9-119]
@OUT06890,OUT06874,OUT06858
[1,9-119]
@OUT06888,OUT06872,OUT06856
[5,8-119]
@OUT06892,OUT06876,OUT06860
[1,9-119]
OUT0
[71-72]
OUT0
[71-72]
OUT0
[71-72]
OUT[15..0]
[1,6,8-119]
OUT[255..0]
[1,8-119]
OUT0
[71-72]
@OUT21,OUT20,OUT19,OUT18,OUT17
[1,3-4,7-119]
OUT0
[1-119]
OUT0
[1-119]

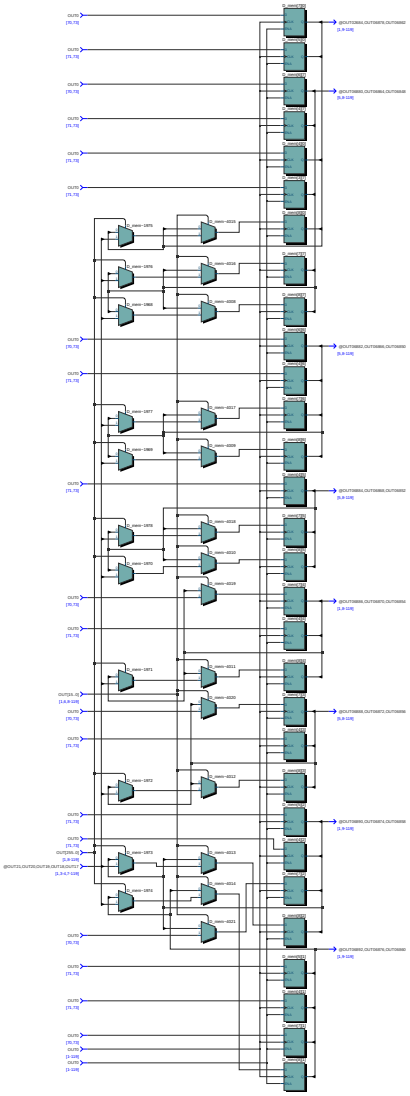

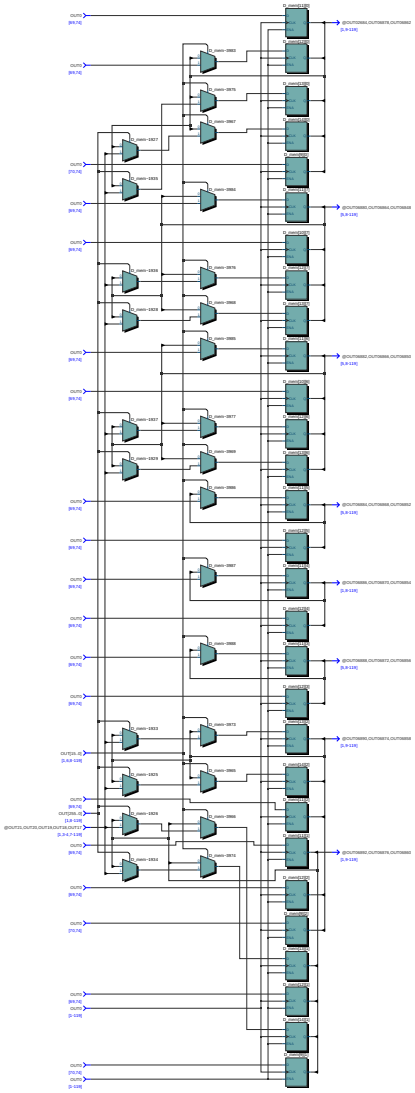

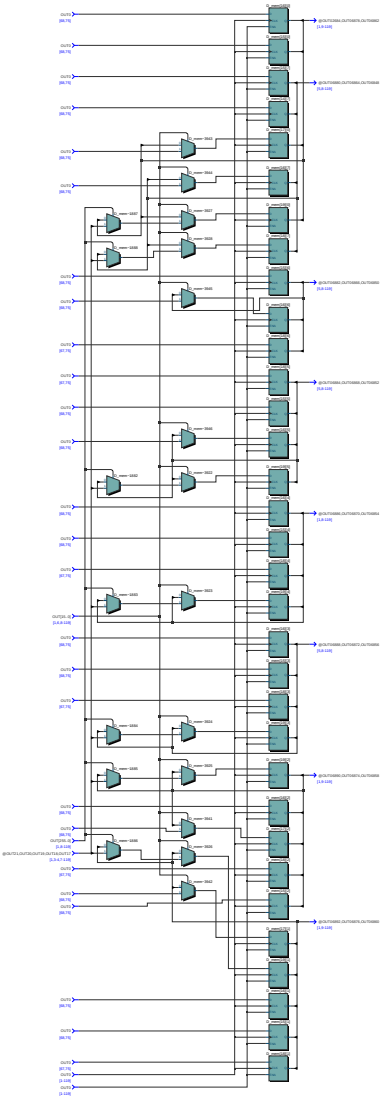

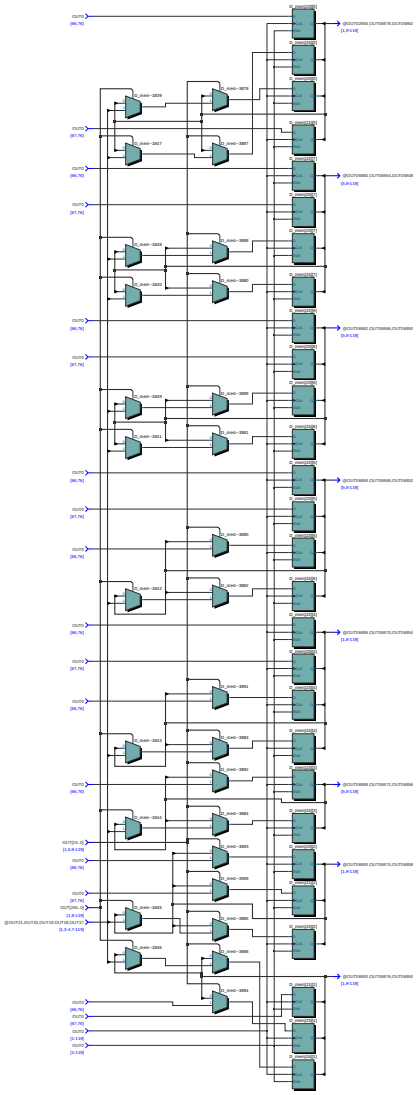

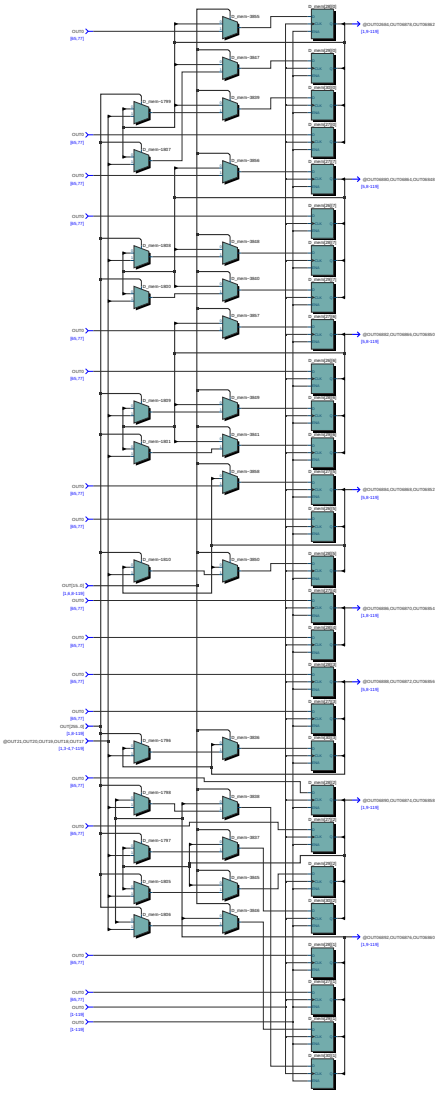

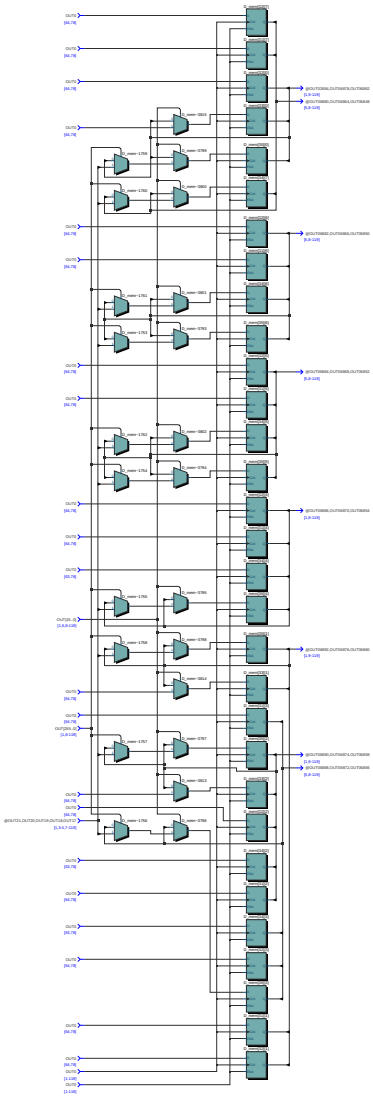

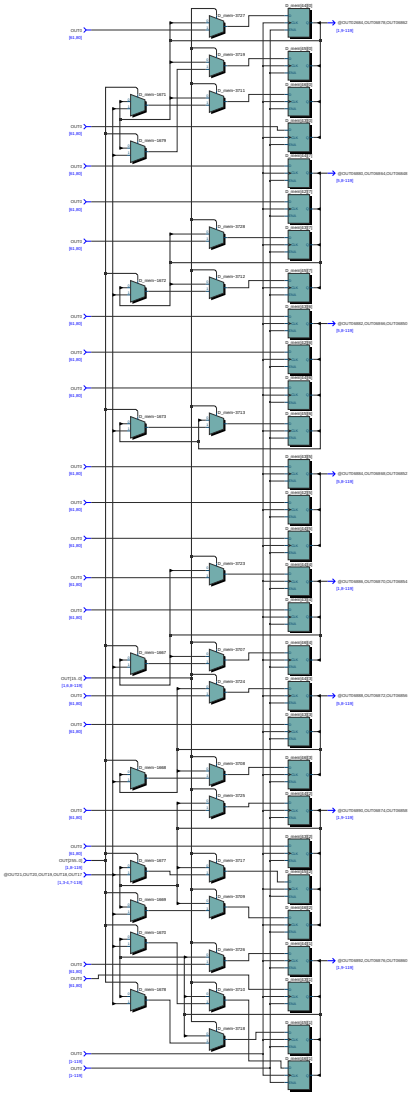

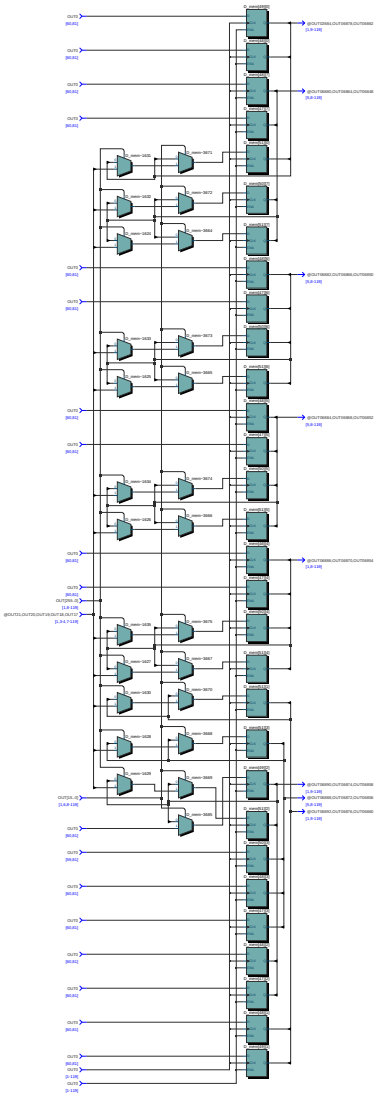

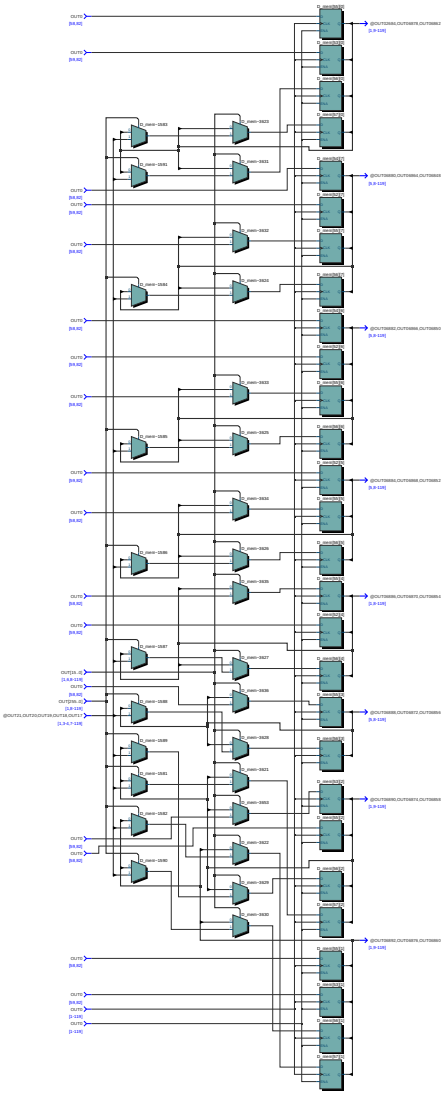

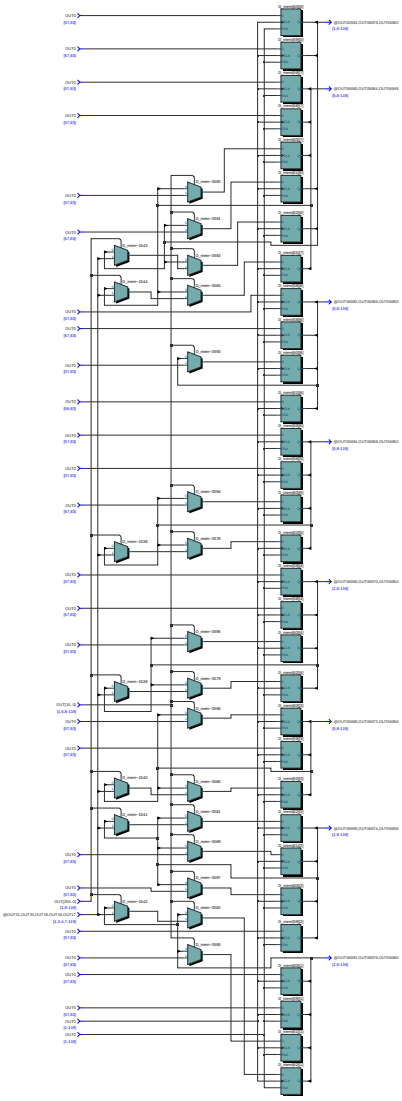

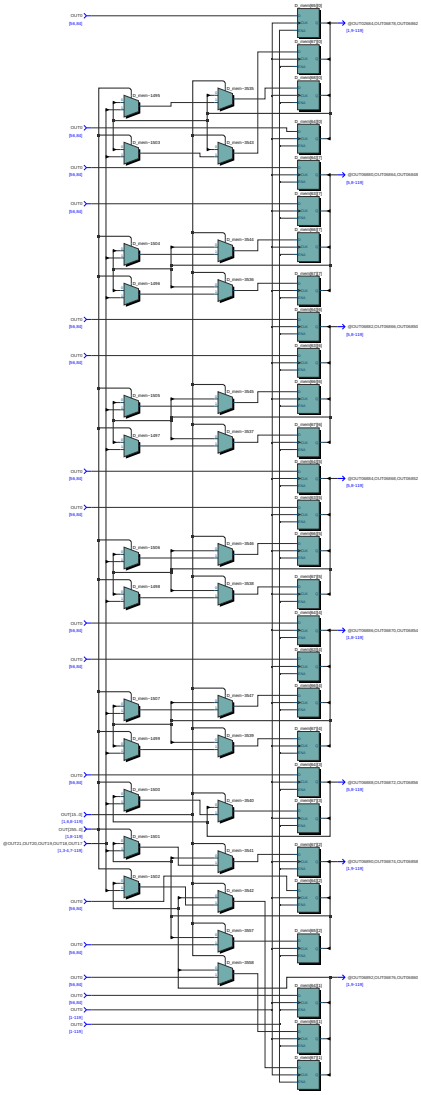

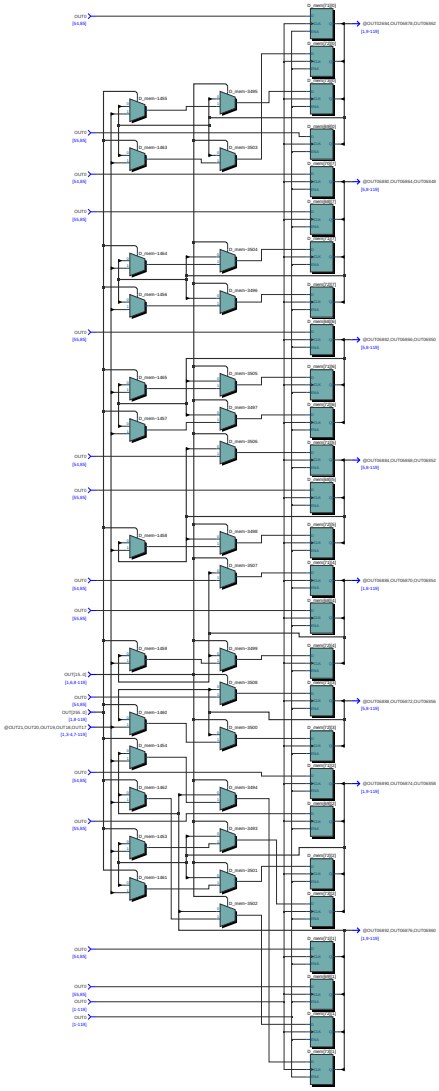

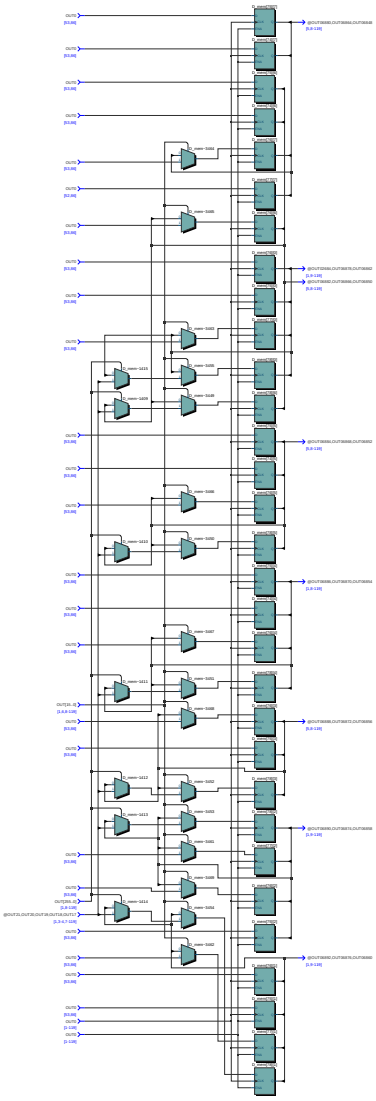

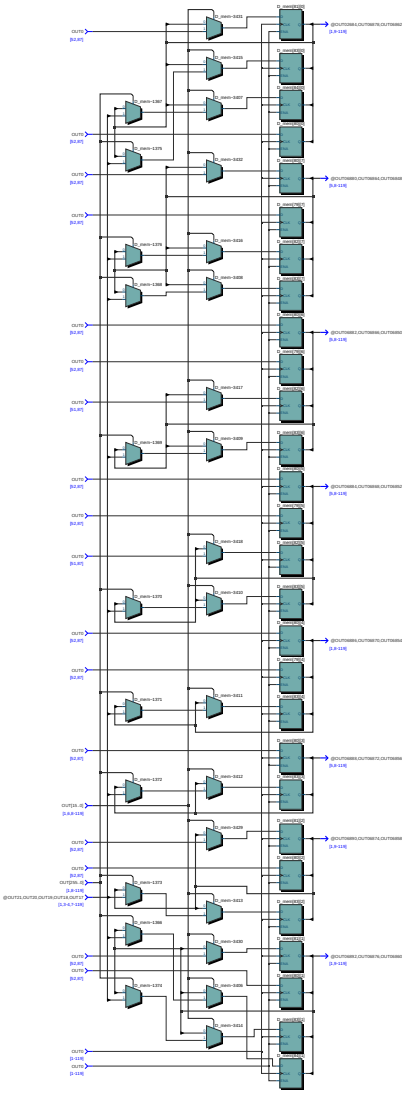

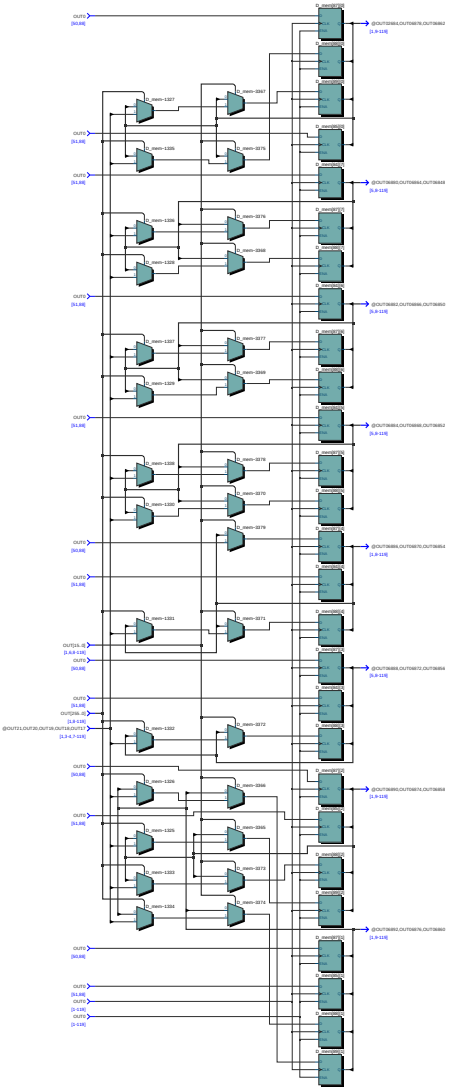

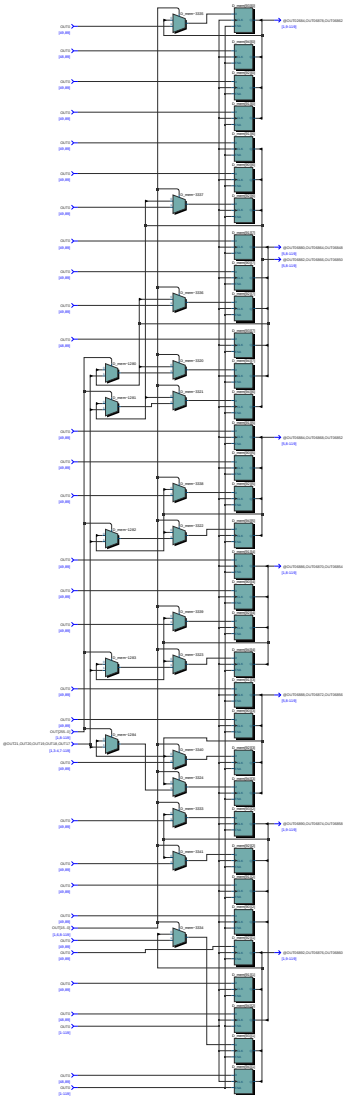

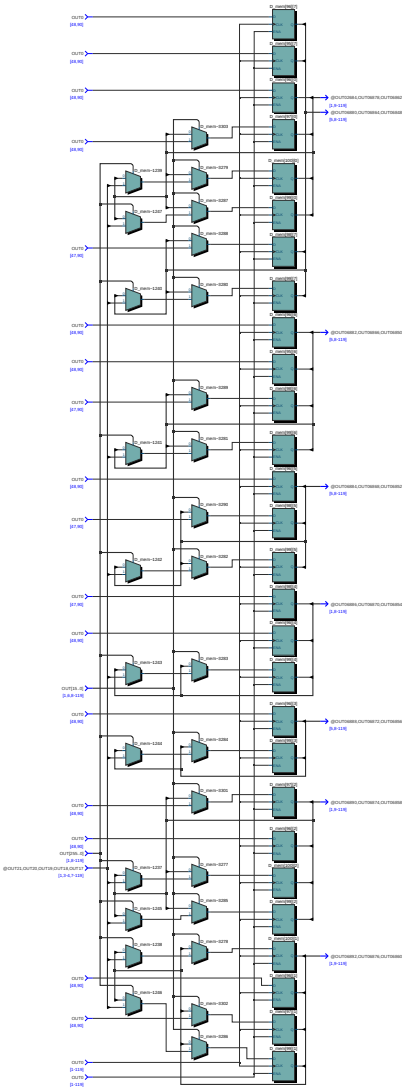

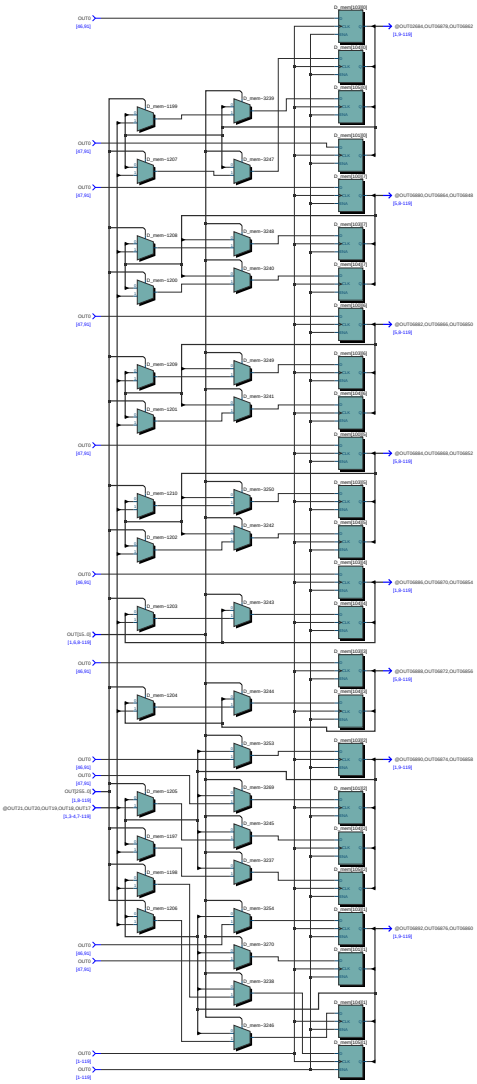
OUT0
[46.9s]
OUT0
[47.9s]
OUT0
[47.9s]
OUT0
[47.9s]
OUT0
[47.9s]
OUT0
[46.9s]
OUT[31..0]
[1,6,9-116]
OUT0
[46.9s]
OUT0
[46.9s]
OUT0
[47.9s]
OUT[56..0]
[1,9-116]
@OUT21,OUT20,OUT19,OUT18,OUT17
[1,3-4,7-116]
OUT0
[46.9s]
OUT0
[47.9s]
OUT0
[1-116]
OUT0
[1-116]
D_mem1[0][0]
D_mem1[1][0]
D_mem1[2][0]
D_mem1[3][0]
D_mem1[4][0]
D_mem1[5][0]
D_mem1[6][0]
D_mem1[7][0]
D_mem1[8][0]
D_mem1[9][0]
D_mem1[10][0]
D_mem1[11][0]
D_mem1[12][0]
D_mem1[13][0]
D_mem1[14][0]
D_mem1[15][0]
D_mem1[16][0]
D_mem1[17][0]
D_mem1[18][0]
D_mem1[19][0]
D_mem1[20][0]
D_mem1[21][0]
D_mem1[22][0]
D_mem1[23][0]
D_mem1[24][0]
D_mem1[25][0]
D_mem1[26][0]
D_mem1[27][0]
D_mem1[28][0]
D_mem1[29][0]
D_mem1[30][0]
D_mem1[31][0]
D_mem1[32][0]
D_mem1[33][0]
D_mem1[34][0]
D_mem1[35][0]
D_mem1[36][0]
D_mem1[37][0]
D_mem1[38][0]
D_mem1[39][0]
D_mem1[40][0]
D_mem1[41][0]
D_mem1[42][0]
D_mem1[43][0]
D_mem1[44][0]
D_mem1[45][0]
D_mem1[46][0]
D_mem1[47][0]
D_mem1[48][0]
D_mem1[49][0]
D_mem1[50][0]
D_mem1[51][0]
D_mem1[52][0]
D_mem1[53][0]
D_mem1[54][0]
D_mem1[55][0]
D_mem1[56][0]
D_mem1[57][0]
D_mem1[58][0]
D_mem1[59][0]
D_mem1[60][0]
D_mem1[61][0]
D_mem1[62][0]
D_mem1[63][0]
D_mem1[64][0]
D_mem1[65][0]
D_mem1[66][0]
D_mem1[67][0]
D_mem1[68][0]
D_mem1[69][0]
D_mem1[70][0]
D_mem1[71][0]
D_mem1[72][0]
D_mem1[73][0]
D_mem1[74][0]
D_mem1[75][0]
D_mem1[76][0]
D_mem1[77][0]
D_mem1[78][0]
D_mem1[79][0]
D_mem1[80][0]
D_mem1[81][0]
D_mem1[82][0]
D_mem1[83][0]
D_mem1[84][0]
D_mem1[85][0]
D_mem1[86][0]
D_mem1[87][0]
D_mem1[88][0]
D_mem1[89][0]
D_mem1[90][0]
D_mem1[91][0]
D_mem1[92][0]
D_mem1[93][0]
D_mem1[94][0]
D_mem1[95][0]
D_mem1[96][0]
D_mem1[97][0]
D_mem1[98][0]
D_mem1[99][0]
D_mem1[100][0]
D_mem1[101][0]
D_mem1[102][0]
D_mem1[103][0]
D_mem1[104][0]
D_mem1[105][0]
D_mem1[106][0]
D_mem1[107][0]
D_mem1[108][0]
D_mem1[109][0]
D_mem1[110][0]
D_mem1[111][0]
D_mem1[112][0]
D_mem1[113][0]
D_mem1[114][0]
D_mem1[115][0]
D_mem1[116][0]
@OUT02684,OUT06678,OUT06662
[1,9-116]
@OUT06680,OUT06664,OUT06648
[1,9-116]
@OUT06682,OUT06666,OUT06650
[1,9-116]
@OUT06684,OUT06668,OUT06652
[1,9-116]
@OUT06686,OUT06670,OUT06654
[1,9-116]
@OUT06688,OUT06672,OUT06656
[1,9-116]
@OUT06690,OUT06674,OUT06658
[1,9-116]
@OUT06692,OUT06676,OUT06660
[1,9-116]

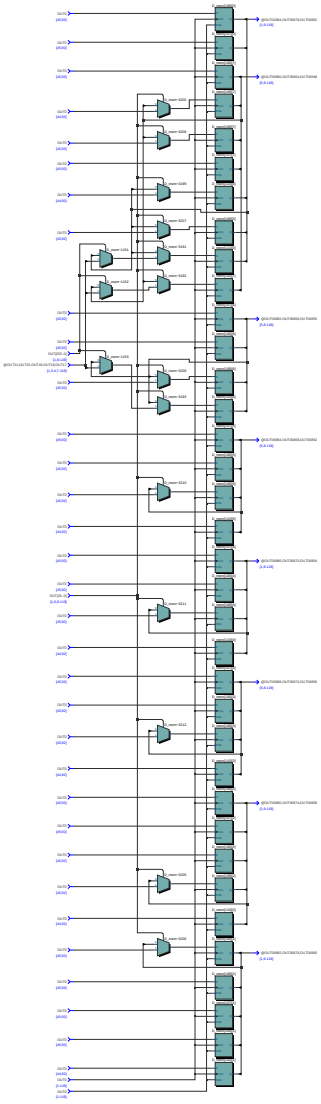

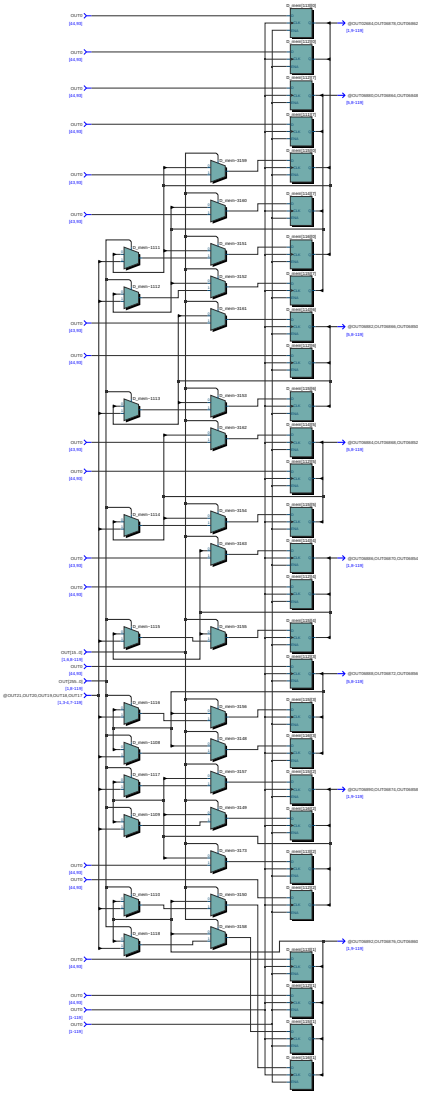

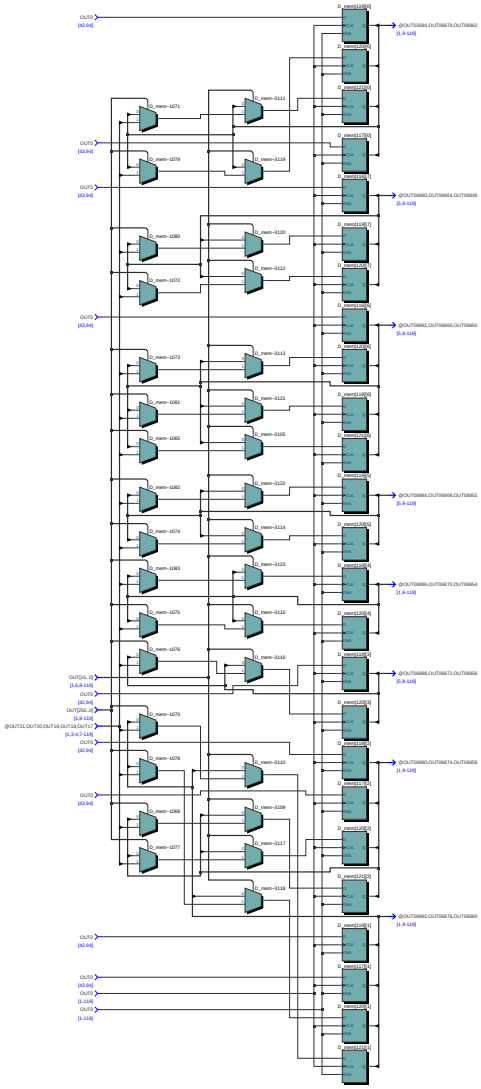

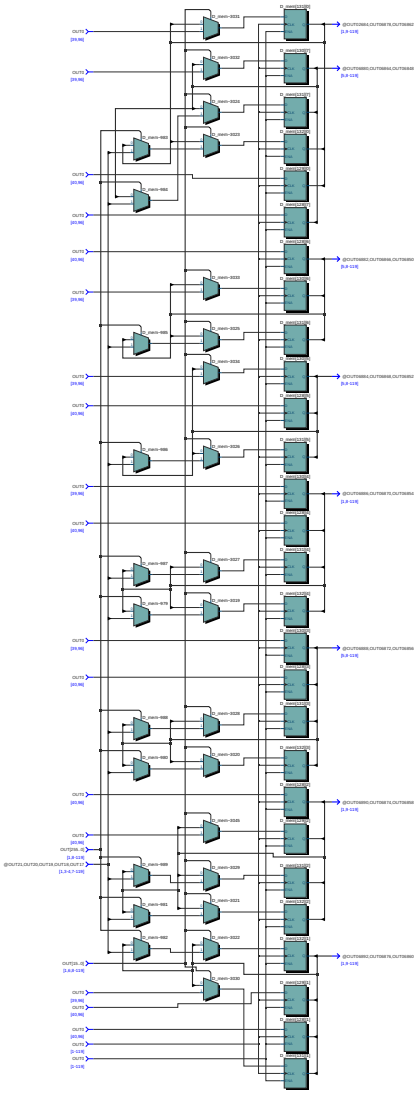

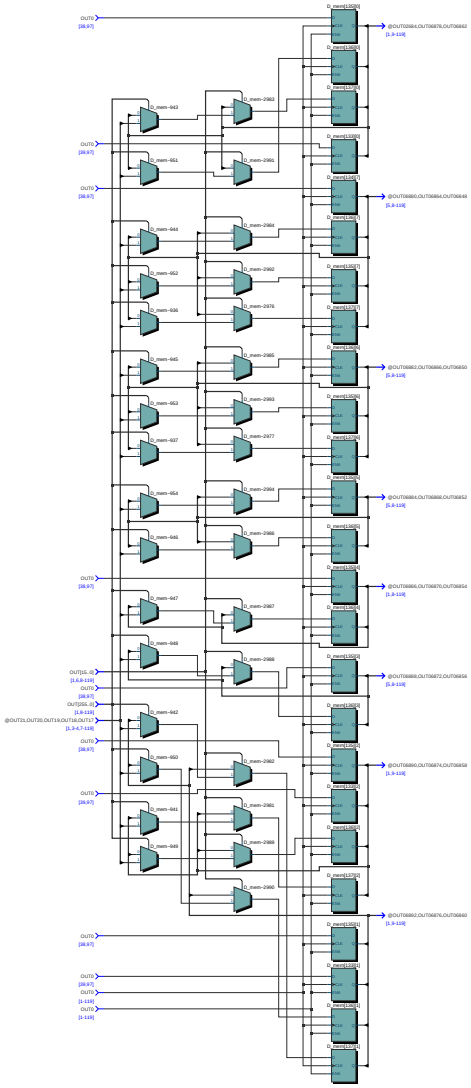
OUT0
[98:97]
OUT0
[98:97]
OUT0
[98:97]
OUT0
[98:97]
OUT[15:-0]
[1,0,8-110]
OUT0
[98:97]
OUT[255:-0]
[1,0-116]
@OUT31,OUT30,OUT19,OUT18,OUT10
[1,3-4,7-116]
OUT0
[98:97]
OUT0
[98:97]
OUT0
[98:97]
OUT0
[98:97]
OUT0
[1-116]
OUT0
[1-116]
D_mem-643
D_mem-661
D_mem-644
D_mem-662
D_mem-636
D_mem-645
D_mem-653
D_mem-627
D_mem-654
D_mem-646
D_mem-647
D_mem-648
D_mem-642
D_mem-650
D_mem-641
D_mem-649
D_mem-2963
D_mem-2961
D_mem-2964
D_mem-2962
D_mem-2976
D_mem-2965
D_mem-2963
D_mem-2977
D_mem-2964
D_mem-2966
D_mem-2967
D_mem-2968
D_mem-2962
D_mem-2961
D_mem-2968
D_mem-2966
D_mem[152]0
D_mem[152]3
D_mem[137]1
D_mem[153]0
D_mem[134]1
D_mem[146]1
D_mem[152]7
D_mem[137]1
D_mem[145]0
D_mem[152]3
D_mem[137]1
D_mem[145]0
D_mem[146]0
D_mem[152]6
D_mem[146]0
D_mem[152]8
D_mem[152]3
D_mem[145]0
D_mem[146]0
D_mem[137]0
D_mem[152]1
D_mem[134]1
D_mem[145]0
D_mem[137]1
@OUT06684,OUT06678,OUT06672
[1,8-110]
@OUT06680,OUT06654,OUT06649
[1,8-110]
@OUT06682,OUT06656,OUT06653
[1,8-110]
@OUT06684,OUT06666,OUT06652
[1,8-110]
@OUT06686,OUT06670,OUT06654
[1,8-110]
@OUT06689,OUT06672,OUT06656
[1,8-110]
@OUT06690,OUT06674,OUT06658
[1,8-110]
@OUT06692,OUT06676,OUT06660
[1,8-110]

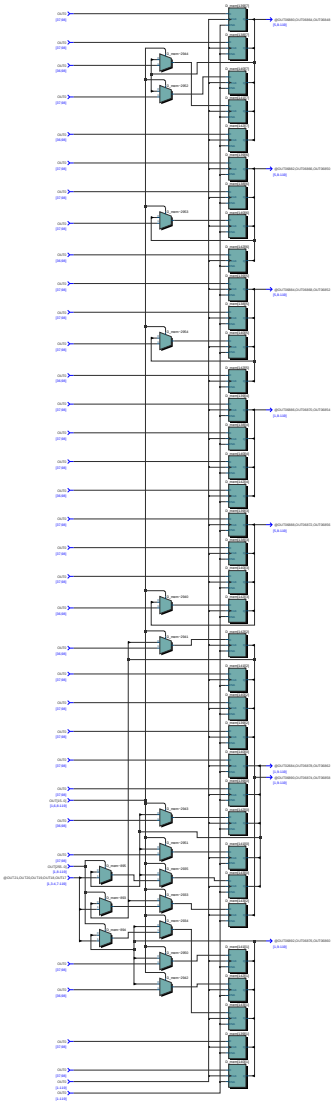

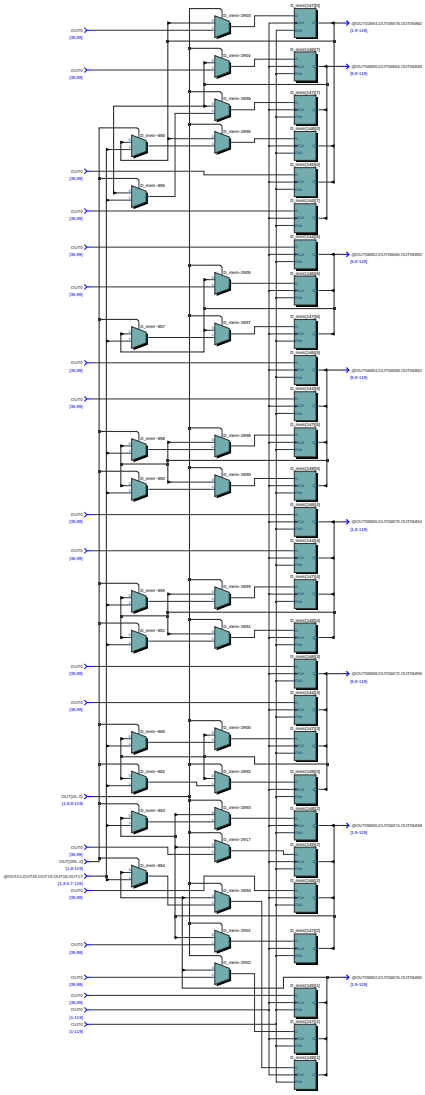

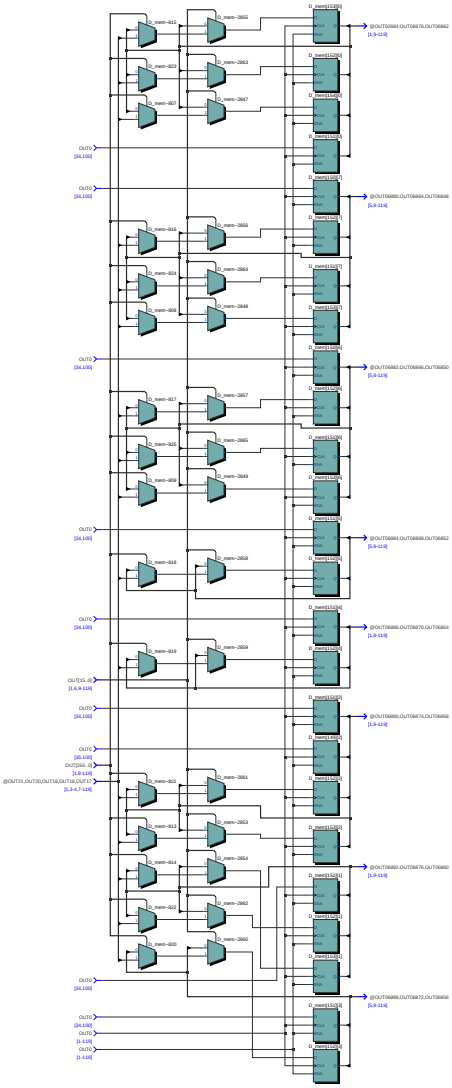
D_mem~815
D_mem~2655
D_mem~823
D_mem~2663
D_mem~827
D_mem~2647
OUT0
[34,10]
D_mem~816
D_mem~2656
D_mem~824
D_mem~2664
D_mem~828
D_mem~2648
D_mem~817
D_mem~2657
D_mem~825
D_mem~2665
D_mem~829
D_mem~2649
D_mem~818
D_mem~2658
D_mem~819
D_mem~2659
OUT1[1,-1]
[1,6,8-11]
OUT1[31,-1]
[1,8-11]
@OUT21,OUT20,OUT19,OUT18,OUT17
[1,3-4,7-11]
D_mem~821
D_mem~2661
D_mem~813
D_mem~2653
D_mem~814
D_mem~2654
D_mem~822
D_mem~2662
D_mem~820
D_mem~2660
D_mem[1512]
D_mem[1513]
D_mem[1514]
D_mem[1515]
D_mem[1516]
D_mem[1517]
D_mem[1518]
D_mem[1519]
D_mem[1520]
D_mem[1521]
D_mem[1522]
D_mem[1523]
D_mem[1524]
D_mem[1525]
D_mem[1526]
D_mem[1527]
D_mem[1528]
D_mem[1529]
D_mem[1530]
D_mem[1531]
D_mem[1532]
D_mem[1533]
D_mem[1534]
D_mem[1535]
D_mem[1536]
D_mem[1537]
D_mem[1538]
D_mem[1539]
D_mem[1540]
D_mem[1541]
D_mem[1542]
D_mem[1543]
D_mem[1544]
D_mem[1545]
D_mem[1546]
D_mem[1547]
D_mem[1548]
D_mem[1549]
D_mem[1550]
D_mem[1551]

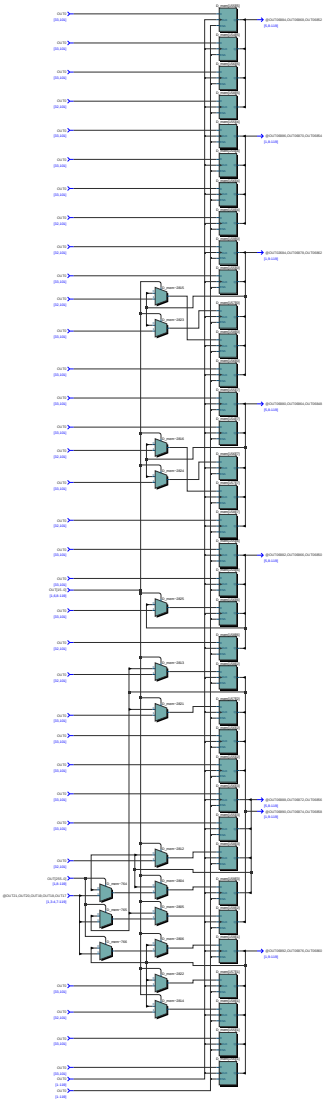

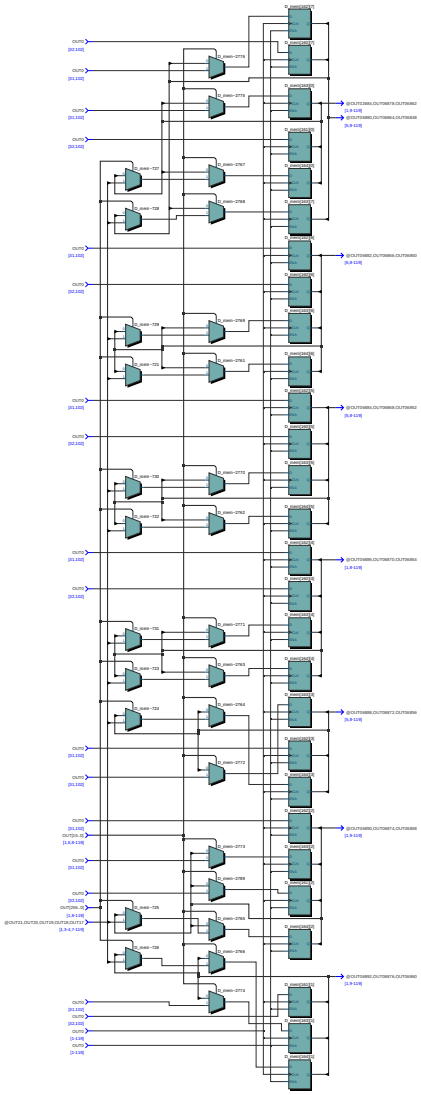

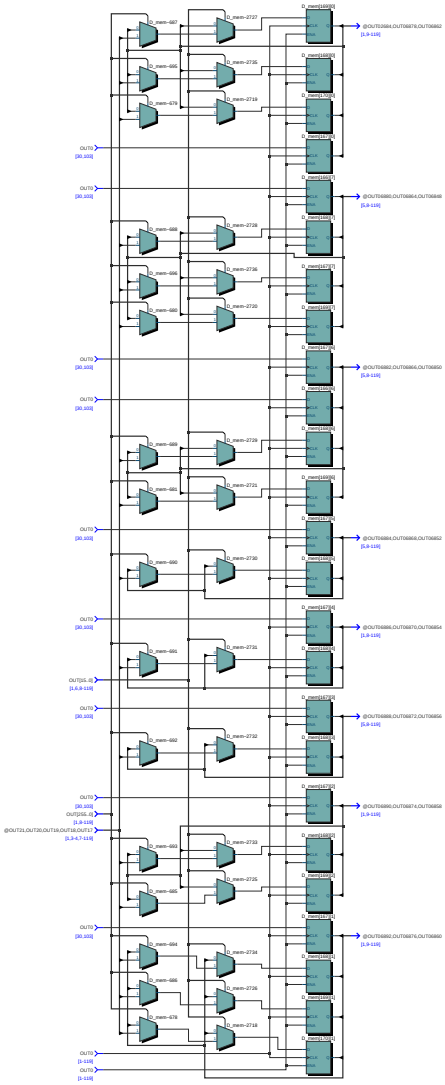
D_mem-2727
D_mem-2735
D_mem-2719
D_mem-2728
D_mem-2736
D_mem-2720
D_mem-2729
D_mem-2721
D_mem-2730
D_mem-2731
D_mem-2732
D_mem-2733
D_mem-2725
D_mem-2734
D_mem-2726
D_mem-2718
OUT0
[30,103]
OUT[15,0]
[1,8-118]
@OUT21,OUT20,OUT19,OUT18,OUT17
[1,3-4,7-118]
[1,9-115]
[1,8-118]
[1,1-118]

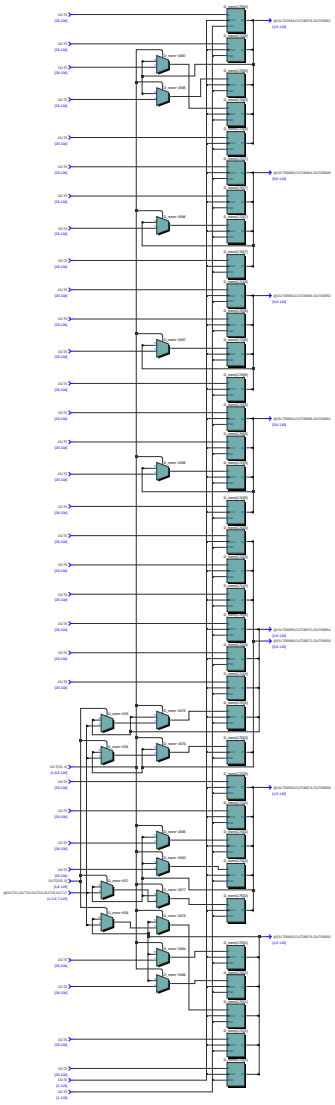

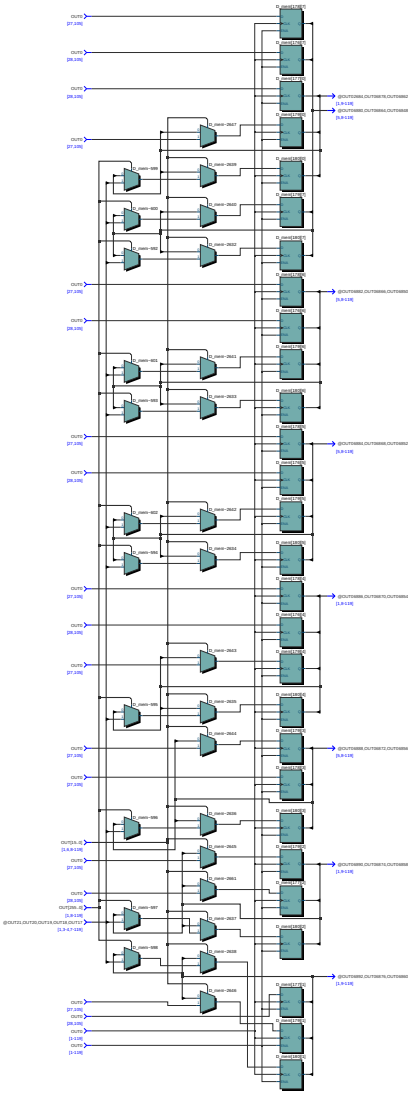

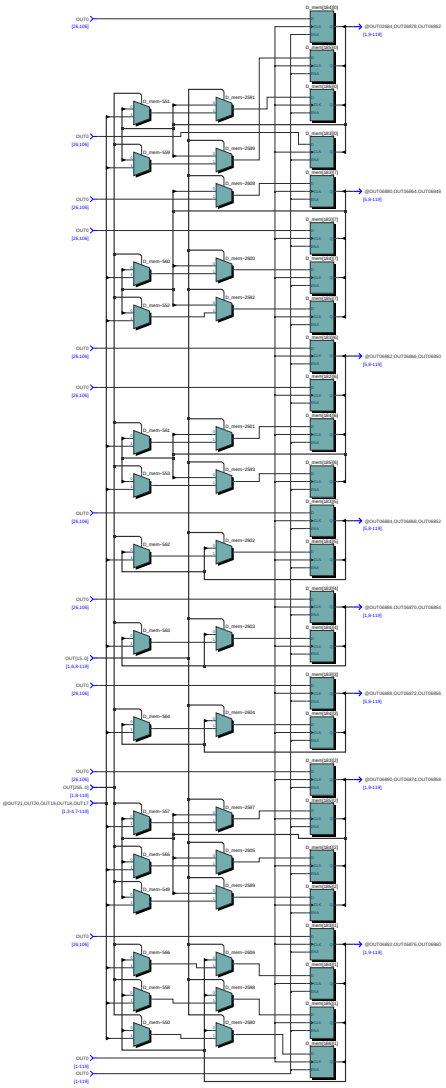
OUT0
[26,106]
OUT0
[26,106]
OUT0
[26,106]
OUT0
[26,106]
OUT0
[26,106]
OUT0
[26,106]
OUT0
[26,106]
OUT0
[26,106]
OUT[15..0]
[1,4,9-113]
OUT0
[26,106]
OUT0
[26,106]
OUT[15..0]
[1,9-113]
@OUT21,OUT20,OUT19,OUT18,OUT17
[1,3-4,7-113]
OUT0
[26,106]
OUT0
[1-113]
OUT0
[1-113]
@OUT02684,OUT06678,OUT06672
[1,9-113]
@OUT06690,OUT06684,OUT06648
[1,9-113]
@OUT06682,OUT06696,OUT06650
[1,9-113]
@OUT06694,OUT06658,OUT06652
[1,9-113]
@OUT06696,OUT06670,OUT06654
[1,9-113]
@OUT06688,OUT06672,OUT06654
[1,9-113]
@OUT06690,OUT06674,OUT06658
[1,9-113]
@OUT06692,OUT06676,OUT06660
[1,9-113]

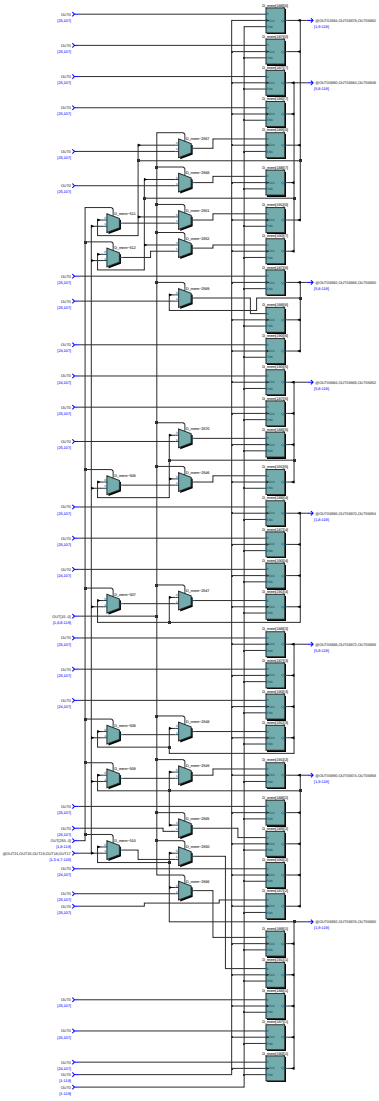

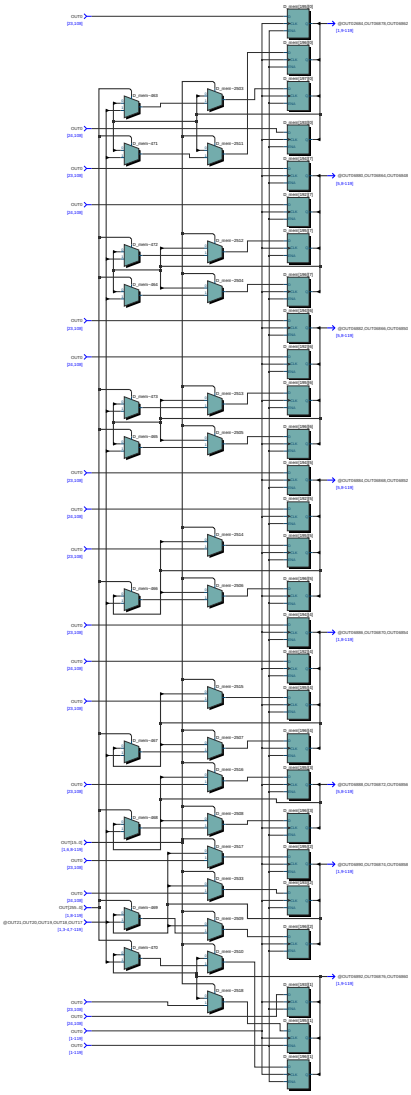

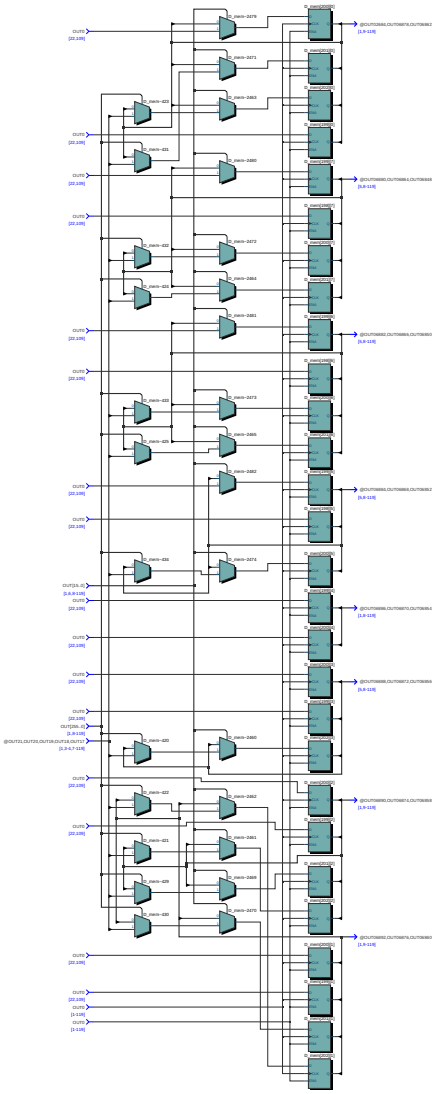

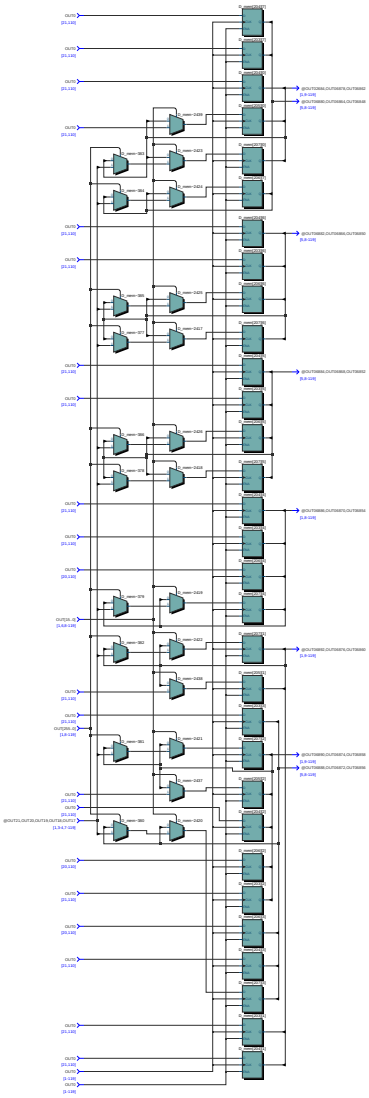

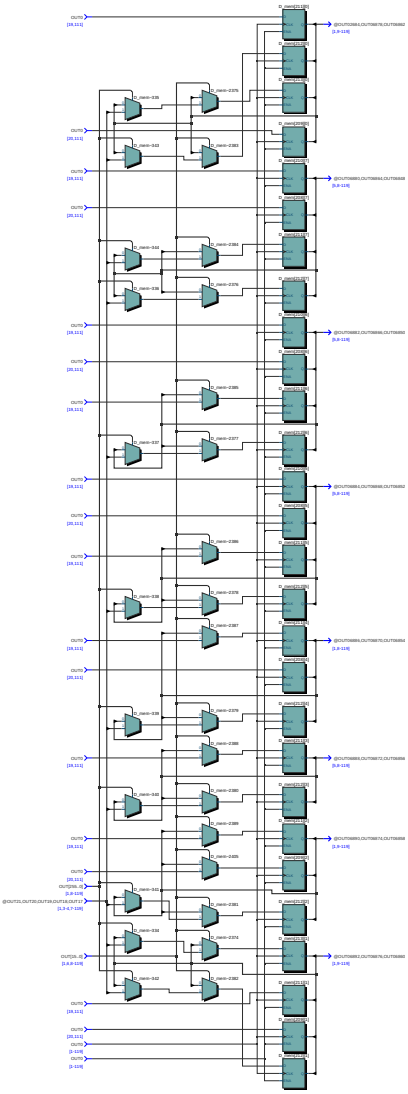

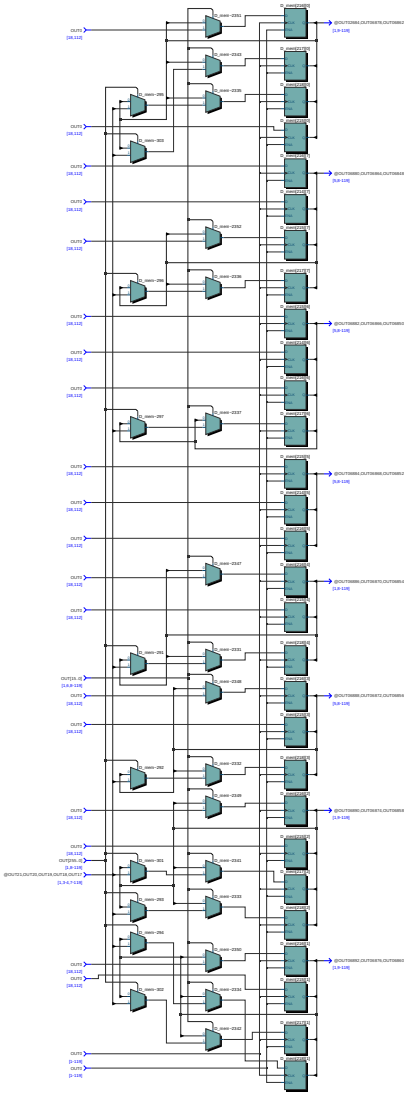

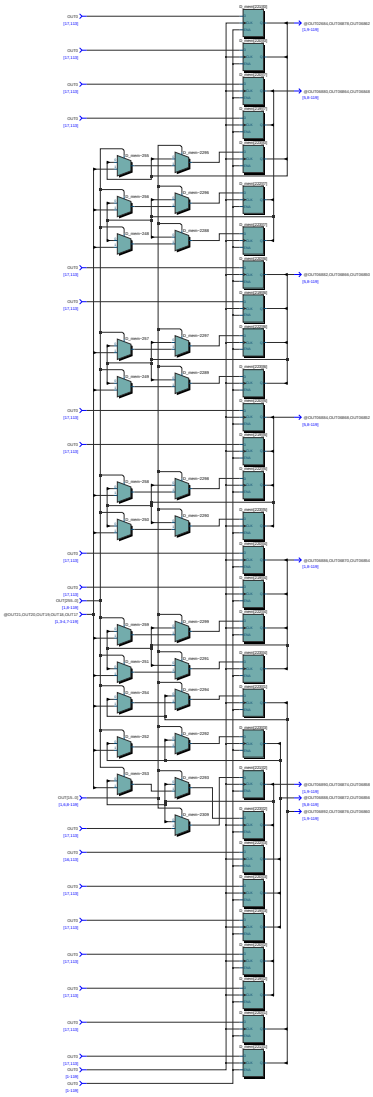

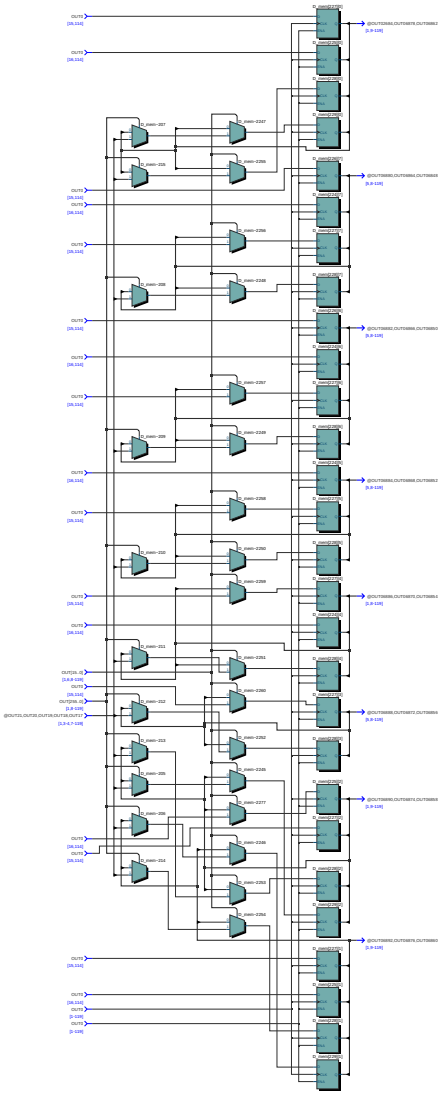

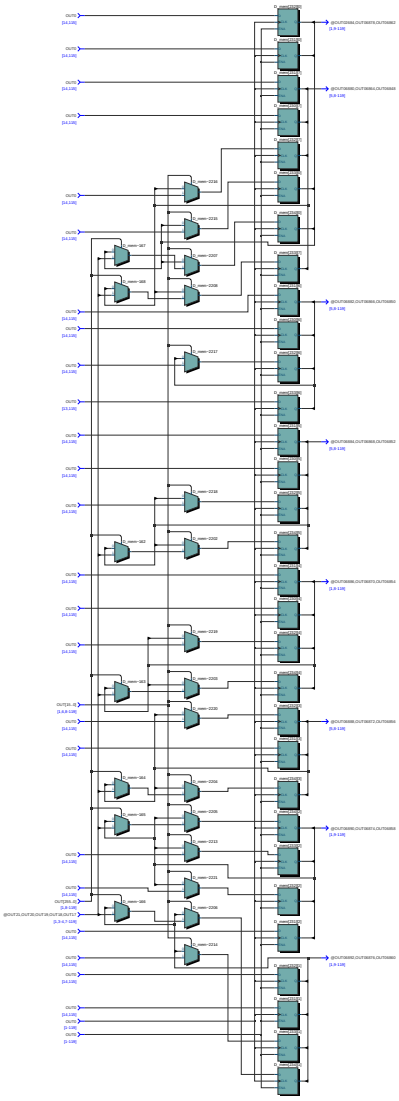

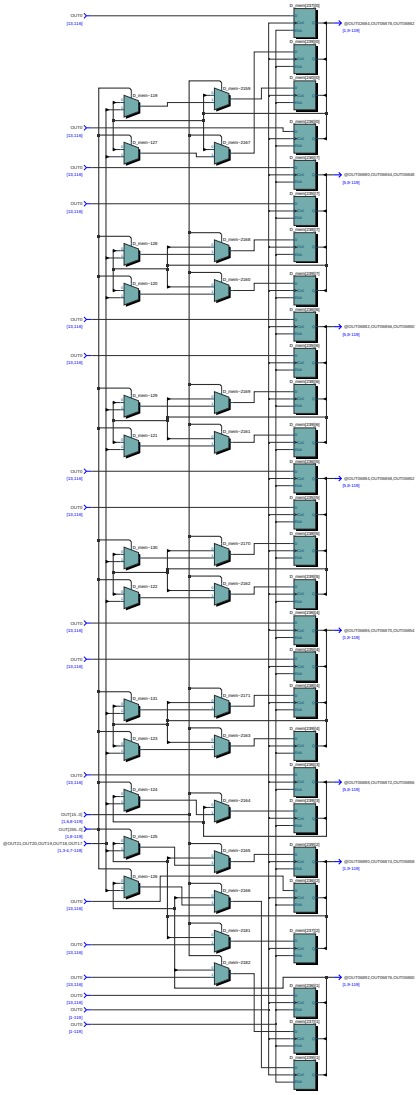

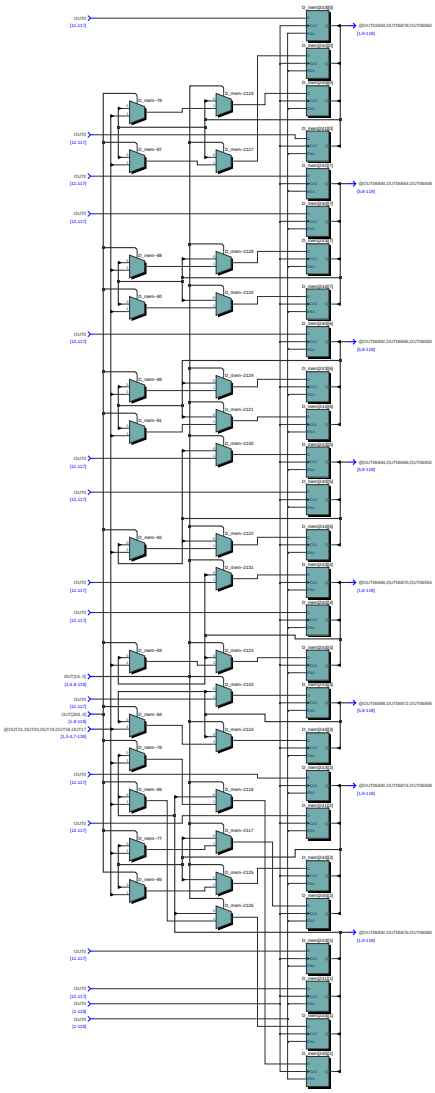

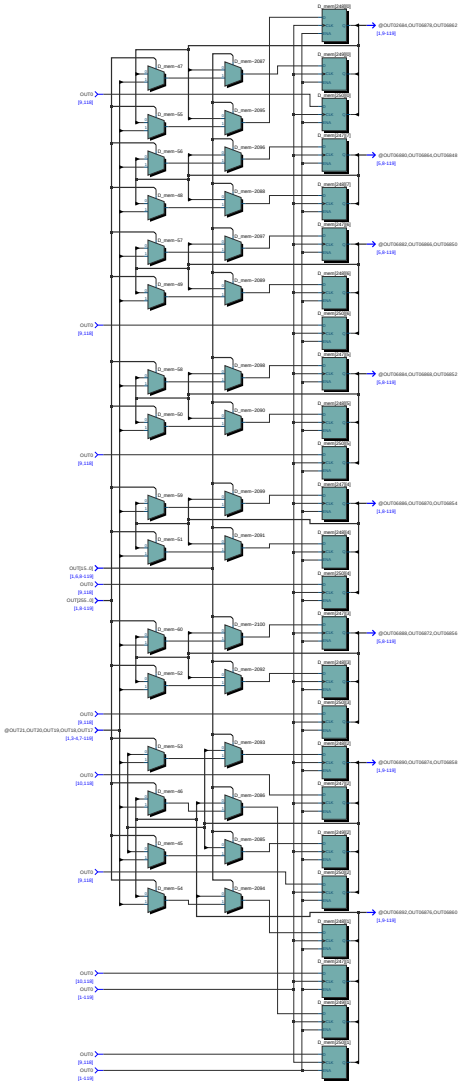
D_mem[2489]
D_mem[2488]
D_mem[2487]
D_mem[2486]
D_mem[2485]
D_mem[2484]
D_mem[2483]
D_mem[2482]
D_mem[2481]
D_mem[2480]
D_mem[2479]
D_mem[2478]
D_mem[2477]
D_mem[2476]
D_mem[2475]
D_mem[2474]
D_mem[2473]
D_mem[2472]
D_mem[2471]
D_mem[2470]
D_mem[2469]
D_mem[2468]
D_mem[2467]
D_mem[2466]
D_mem[2465]
D_mem[2464]
D_mem[2463]
D_mem[2462]
D_mem[2461]
D_mem[2460]
D_mem[2459]
D_mem[2458]
D_mem[2457]
D_mem[2456]
D_mem[2455]
D_mem[2454]
D_mem[2453]
D_mem[2452]
D_mem[2451]
D_mem[2450]
D_mem[2449]

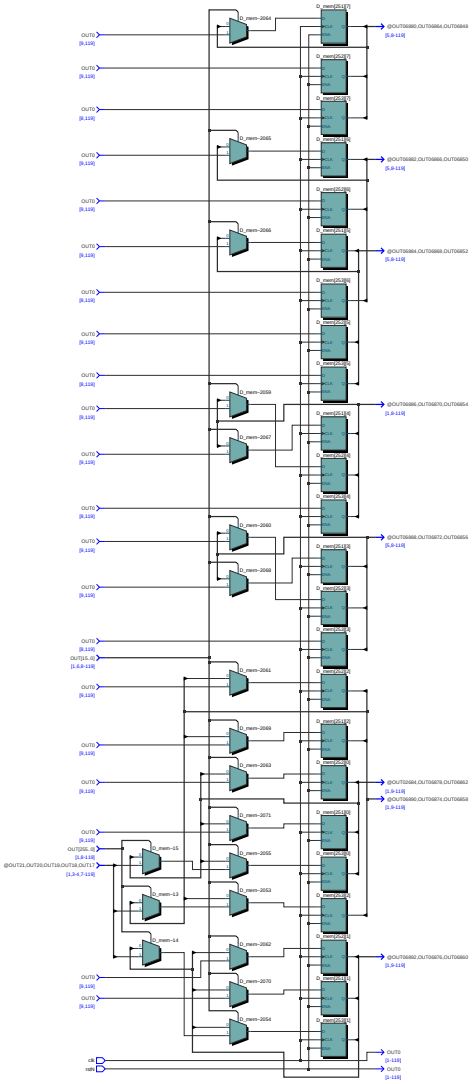
D_mem-2064
D_mem[25:17]
@OUT06886,OUT06864,OUT06849
[5,8-119]
OUT0
[8-119]
D_mem[25:27]
D_mem-2065
D_mem[25:26]
@OUT06882,OUT06866,OUT06853
[5,8-119]
D_mem-2066
@OUT06884,OUT06868,OUT06852
[5,8-119]
D_mem-2059
D_mem-2067
@OUT06886,OUT06870,OUT06854
[1,8-119]
D_mem-2060
D_mem-2068
@OUT06888,OUT06872,OUT06856
[5,8-119]
OUT15_0
[1,6,8-119]
D_mem-2061
D_mem-2069
@OUT02484,OUT06878,OUT06862
[1,8-119]
@OUT06890,OUT06874,OUT06858
[1,9-119]
D_mem-2063
D_mem-2071
OUT25_0
[1,8-119]
@OUT23,OUT26,OUT18,OUT19,OUT13
[1,3-4,7-119]
D_mem-15
D_mem-2055
D_mem-13
D_mem-2053
D_mem-14
D_mem-2062
@OUT06892,OUT06876,OUT06860
[1,9-119]
D_mem-2070
D_mem-2054
OUT0
[1-119]
OUT0
[2-119]
ck
rstn