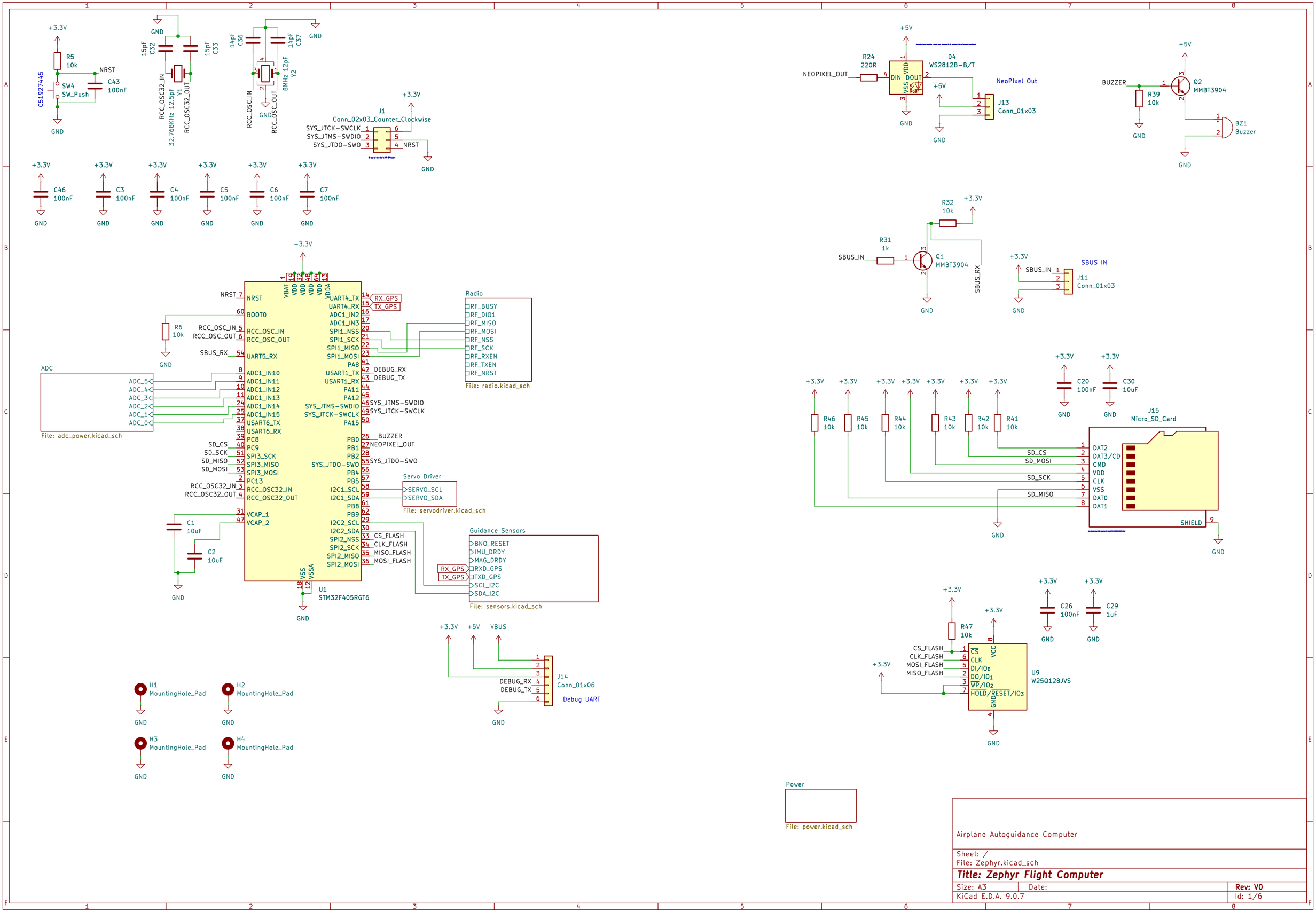

Airplane Autoguidance Computer

Sheet: /
File: Zephyr.kicad_sch

Title: Zephyr Flight Computer

Size: A3	Date:	Rev: V0
KiCad E.D.A. 9.0.7		Id: 1/6

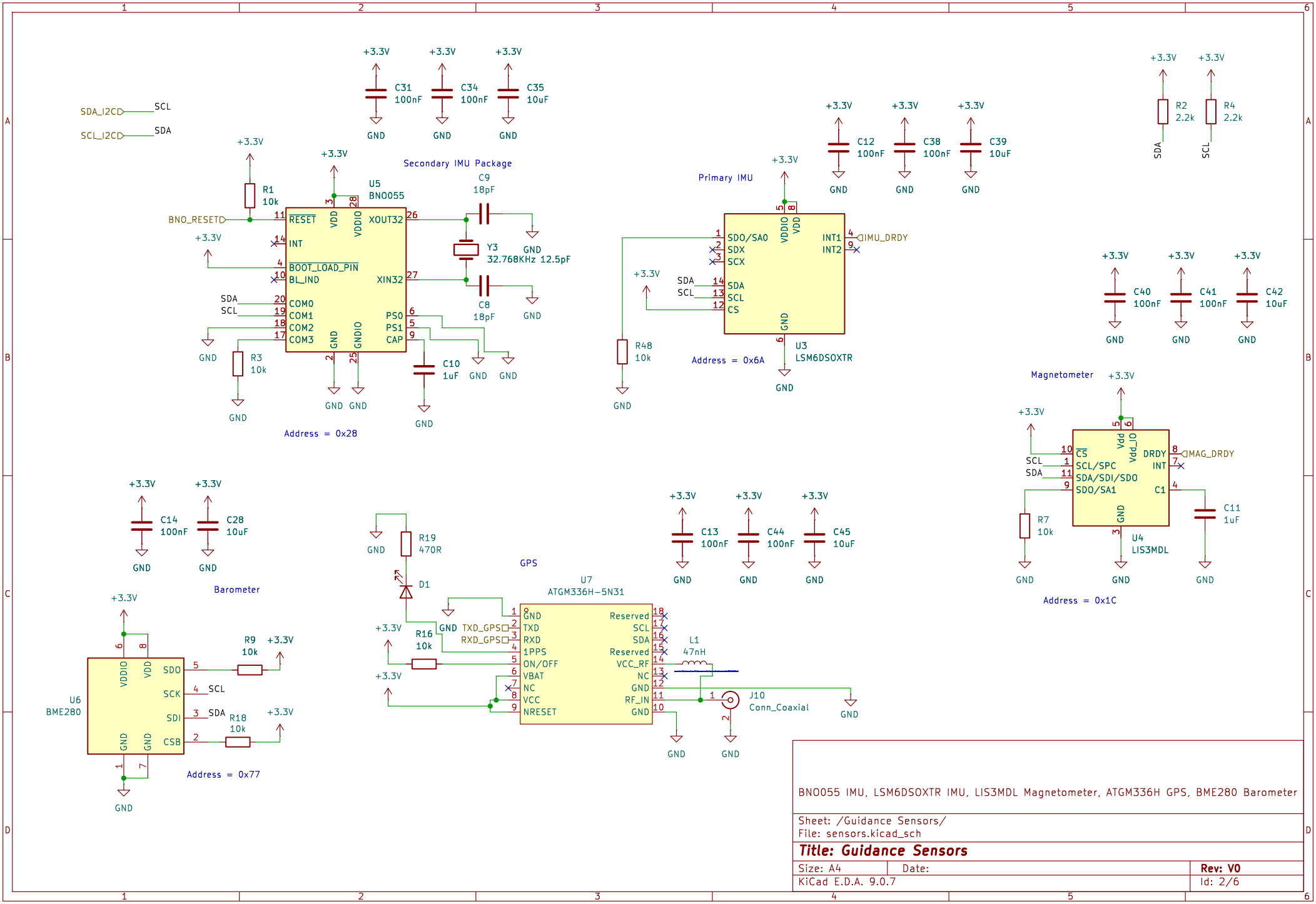

BNO055 IMU, LSM6DSOXTR IMU, LIS3MDL Magnetometer, ATGM336H GPS, BME280 Barometer

Sheet: /Guidance Sensors/
File: sensors.kicad_sch

Title: Guidance Sensors

Size: A4	Date:	Rev: V0
KiCad E.D.A. 9.0.7		Id: 2/6

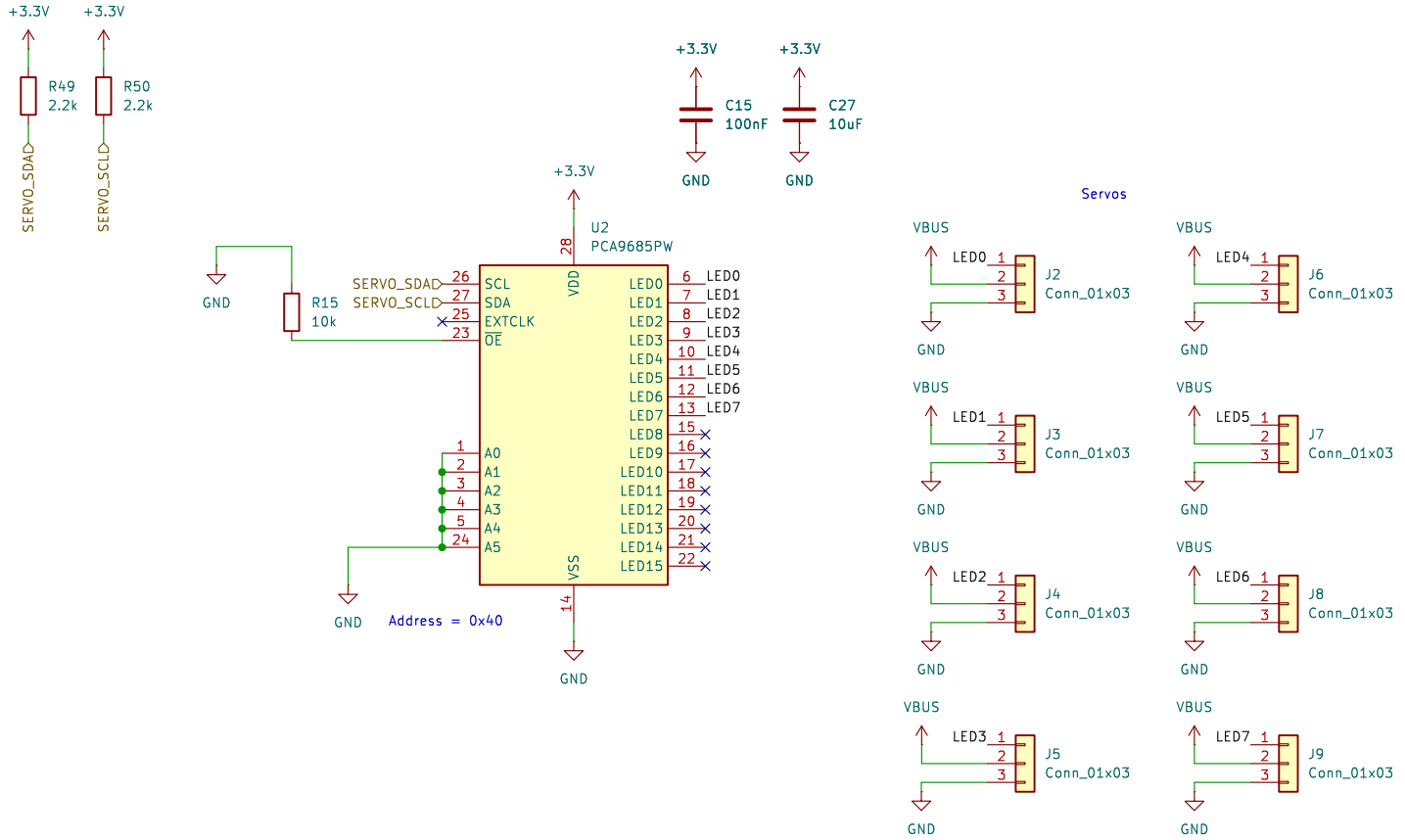

Sheet: /Servo Driver/
File: servodriver.kicad_sch

Title:

Size: A4	Date:	**Rev: V0**
KiCad E.D.A. 9.0.7		Id: 3/6

Here's our power scheme:

- VBUS is the input from the BEC (battery eliminator circuit) of the ESC. It's full of harmonics and is NOT clean at all.
We use this to drive servos and the rest of the power chain.
- The 5V net is actually 4.2V. This is because the LDO is used as the final step in filtering the BEC, so there's a voltage drop.
The only thing that is being fed by it is the 3.3V regulator, the radio and the Neopixels, which are all fine with the lower voltage
- The 3.3V net is true 3.3v and is the primary system voltage for the entire flight computer.

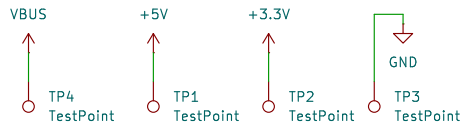

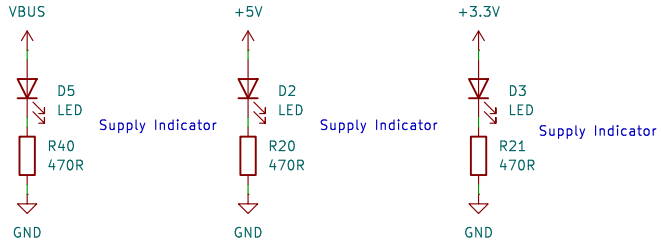

Filter curve

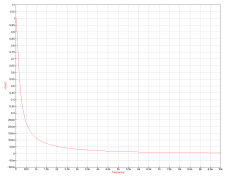

5V Input filter from BEC

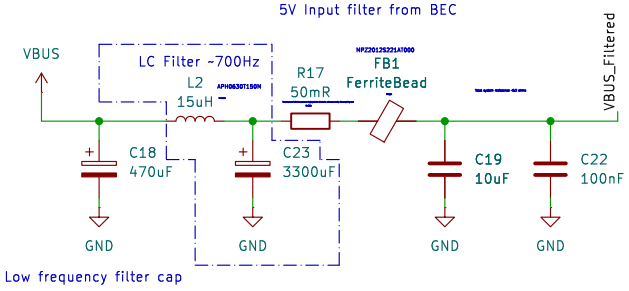

Cap omitted here because of previous caps

4.2V regulator

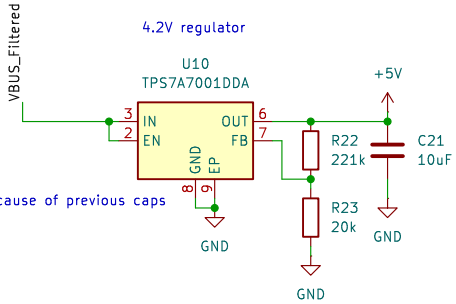

3.3V regulator

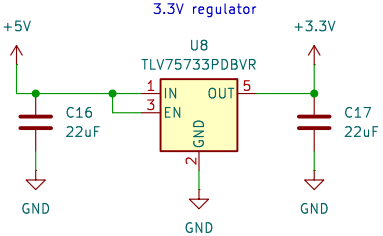

Sheet: /Power/ File: power.kicad_sch		
Title:		
Size: A4	Date:	**Rev: V0**
KiCad E.D.A. 9.0.7		Id: 4/6

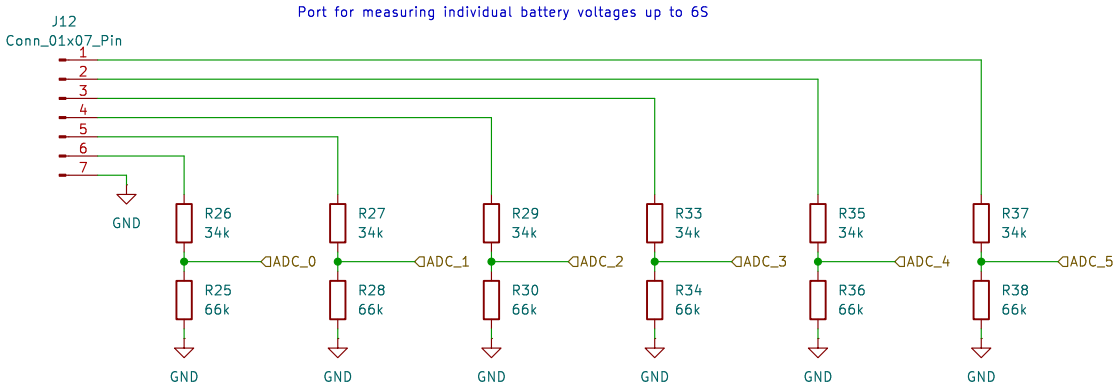

Sheet: /ADC/
File: adc_power.kicad_sch

Title:

Size: A4	Date:	**Rev: V0**
KiCad E.D.A. 9.0.7		Id: 5/6

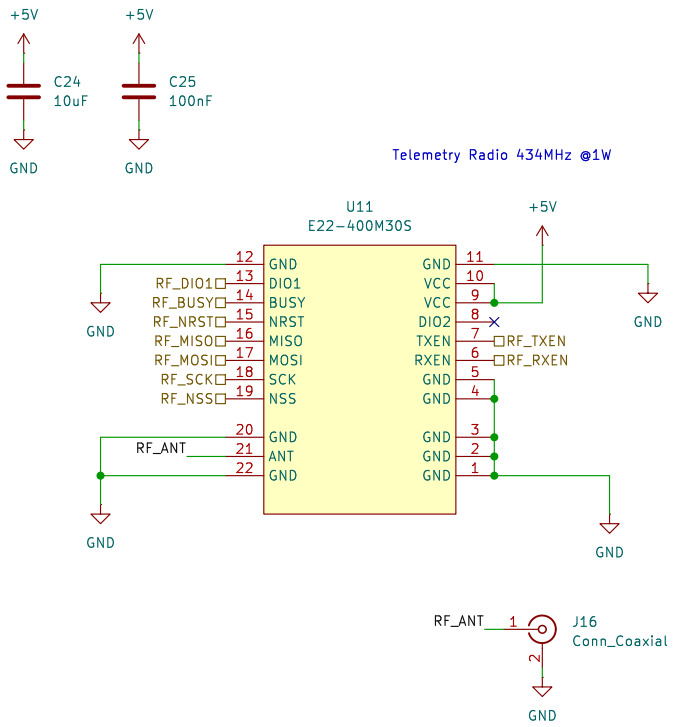

Sheet: /Radio/
File: radio.kicad_sch

Title:

Size: A4	Date:	**Rev: V0**
KiCad E.D.A. 9.0.7		Id: 6/6