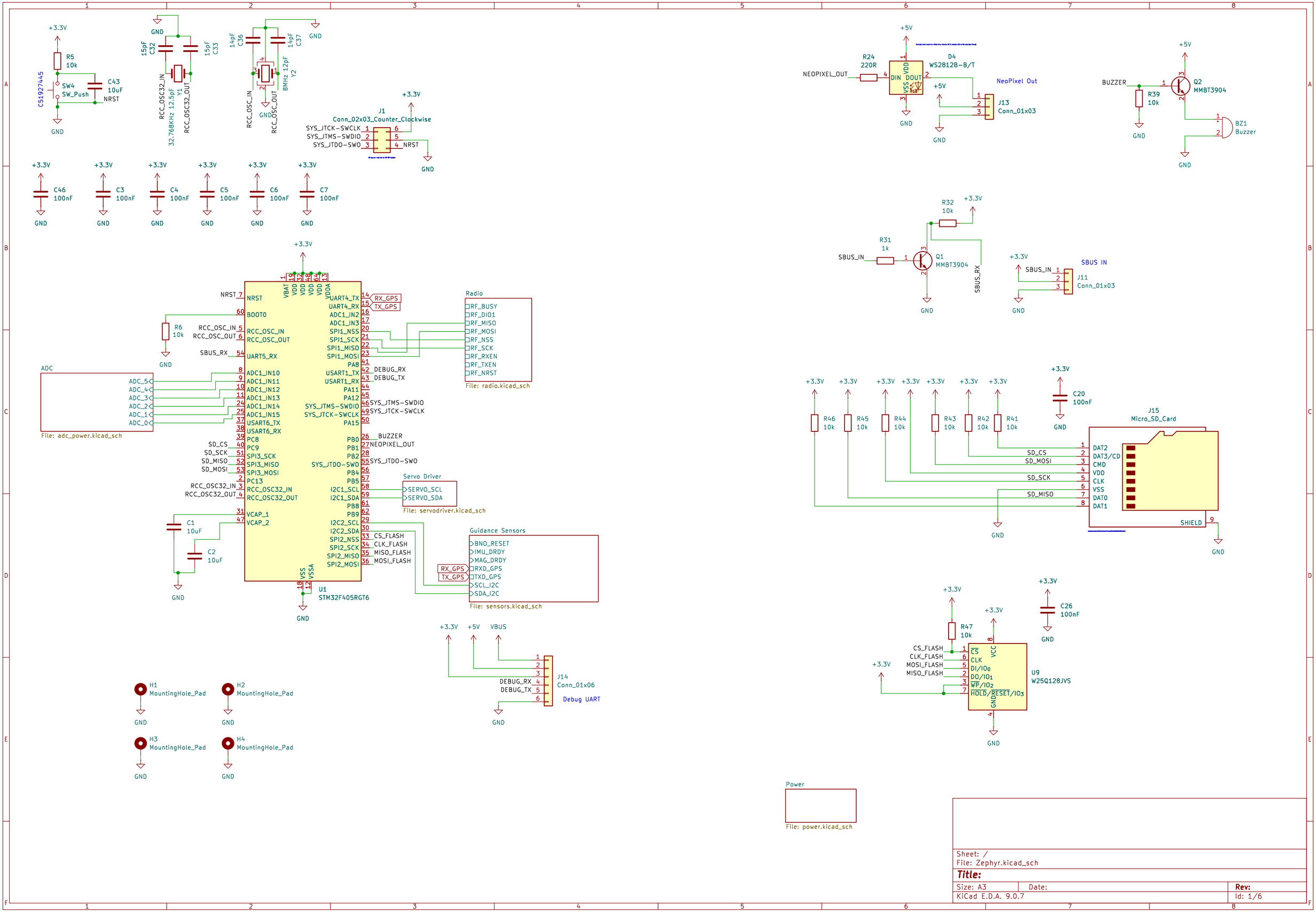
R5 10k
C51927445
SW4 SW_Push
C43 10uF
NRST
GND
+3.3V
15pF C32
15pF C33
RCC_OSC32_IN
RCC_OSC32_OUT
32.768KHz 12.5pF Y1
14pF C36
14pF C37
8MHz 12pF Y2
RCC_OSC_IN
RCC_OSC_OUT
J1 Conn_02x03_Counter_Clockwise
SYS_JTCK-SWCLK
SYS_JTMS-SWDIO
SYS_JTDO-SWO
C46 100nF
C3 100nF
C4 100nF
C5 100nF
C6 100nF
C7 100nF
+5V
R24 220R
NEOPIXEL_OUT
D4 WS2812B-B/T
DIN DOUT VDD VSS
NeoPixel Out
J13 Conn_01x03
BUZZER
R39 10k
Q2 MMBT3904
BZ1 Buzzer
R32 10k
R31 1k
SBUS_IN
Q1 MMBT3904
SBUS_RX
SBUS IN
J11 Conn_01x03
R6 10k
ADC
ADC_5
ADC_4
ADC_3
ADC_2
ADC_1
ADC_0
File: adc_power.kicad_sch
NRST
BOOT0
RCC_OSC_IN
RCC_OSC_OUT
UART5_RX
ADC1_IN10
ADC1_IN11
ADC1_IN12
ADC1_IN13
ADC1_IN14
ADC1_IN15
USART6_TX
USART6_RX
PC8
PC9
SPI3_SCK
SPI3_MISO
SPI3_MOSI
PC13
RCC_OSC32_IN
RCC_OSC32_OUT
VCAP_1
VCAP_2
VBAT VDD VDDA VSS VSSA
UART4_TX
UART4_RX
ADC1_IN2
ADC1_IN3
SPI1_NSS
SPI1_SCK
SPI1_MISO
SPI1_MOSI
PA8
USART1_TX
USART1_RX
PA11
PA12
SYS_JTMS-SWDIO
SYS_JTCK-SWCLK
PA15
PB0
PB1
PB2
SYS_JTDO-SWO
PB4
PB5
I2C1_SCL
I2C1_SDA
PB8
PB9
I2C2_SCL
I2C2_SDA
SPI2_NSS
SPI2_SCK
SPI2_MISO
SPI2_MOSI
RX_GPS
TX_GPS
DEBUG_RX
DEBUG_TX
BUZZER
NEOPIXEL_OUT
SYS_JTDO-SWO
SD_CS
SD_SCK
SD_MISO
SD_MOSI
CS_FLASH
CLK_FLASH
MISO_FLASH
MOSI_FLASH
U1 STM32F405RGT6
C1 10uF
C2 10uF
Radio
RF_BUSY
RF_DIO1
RF_MISO
RF_MOSI
RF_NSS
RF_SCK
RF_RXEN
RF_TXEN
RF_NRST
File: radio.kicad_sch
Servo Driver
SERVO_SCL
SERVO_SDA
File: servodriver.kicad_sch
Guidance Sensors
BNO_RESET
IMU_DRDY
MAG_DRDY
RXD_GPS
TXD_GPS
SCL_I2C
SDA_I2C
File: sensors.kicad_sch
VBUS
J14 Conn_01x06
Debug UART
H1 MountingHole_Pad
H2 MountingHole_Pad
H3 MountingHole_Pad
H4 MountingHole_Pad
R46 10k
R45 10k
R44 10k
R43 10k
R42 10k
R41 10k
C20 100nF
J15 Micro_SD_Card
DAT2
DAT3/CD
CMD
VDD
CLK
VSS
DAT0
DAT1
SHIELD
R47 10k
C26 100nF
U9 W25Q128JVS
CS
DI/IO0
DO/IO1
WP/IO2
HOLD/RESET/IO3
Power
File: power.kicad_sch
Sheet: /
File: Zephyr.kicad_sch
Title:
Size: A3
Date:
Rev:
KiCad E.D.A. 9.0.7
Id: 1/6

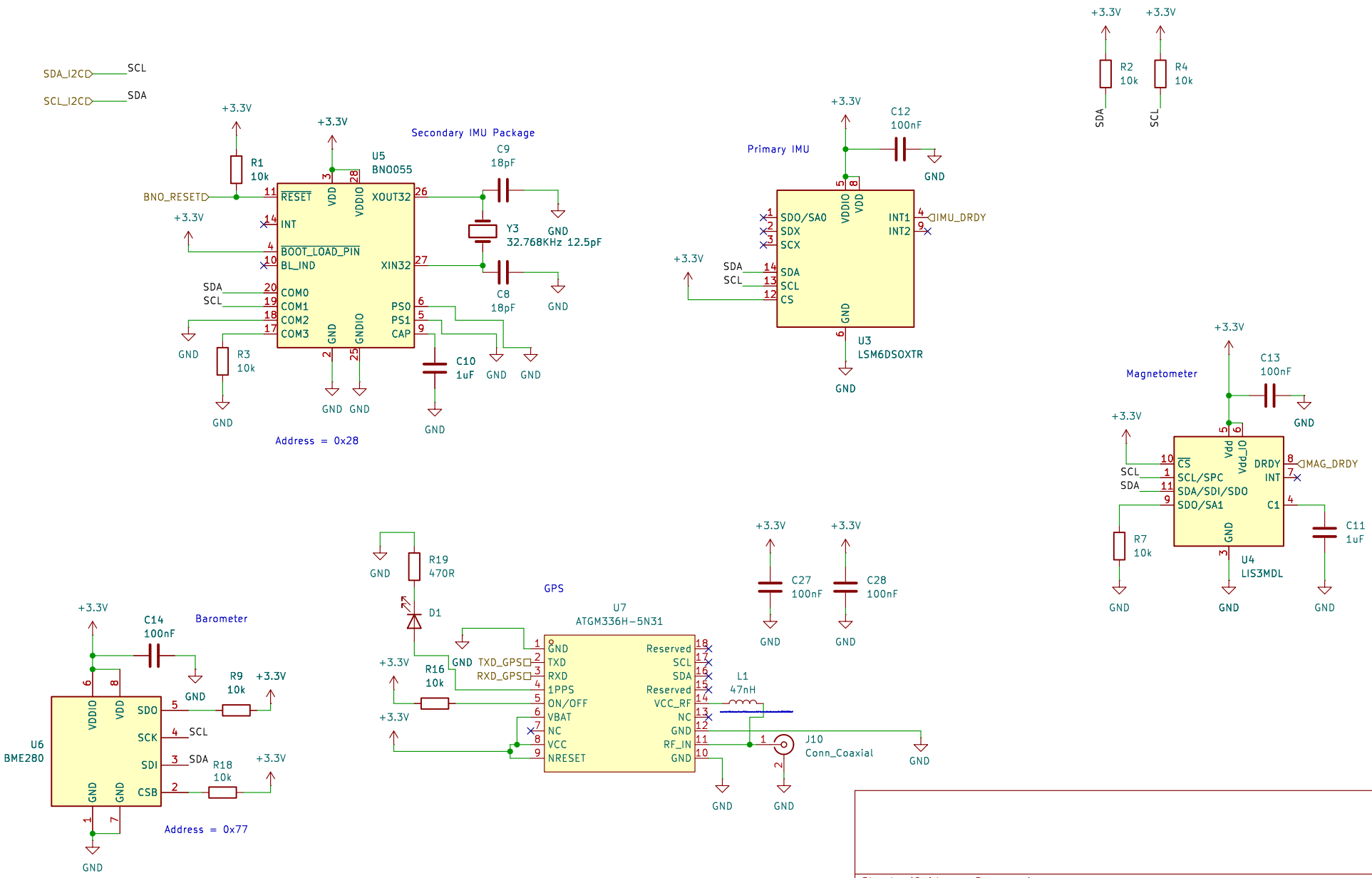

Sheet: /Guidance Sensors/
File: sensors.kicad_sch

Title:

Size: A4	Date:	Rev:
KiCad E.D.A. 9.0.7		Id: 2/6

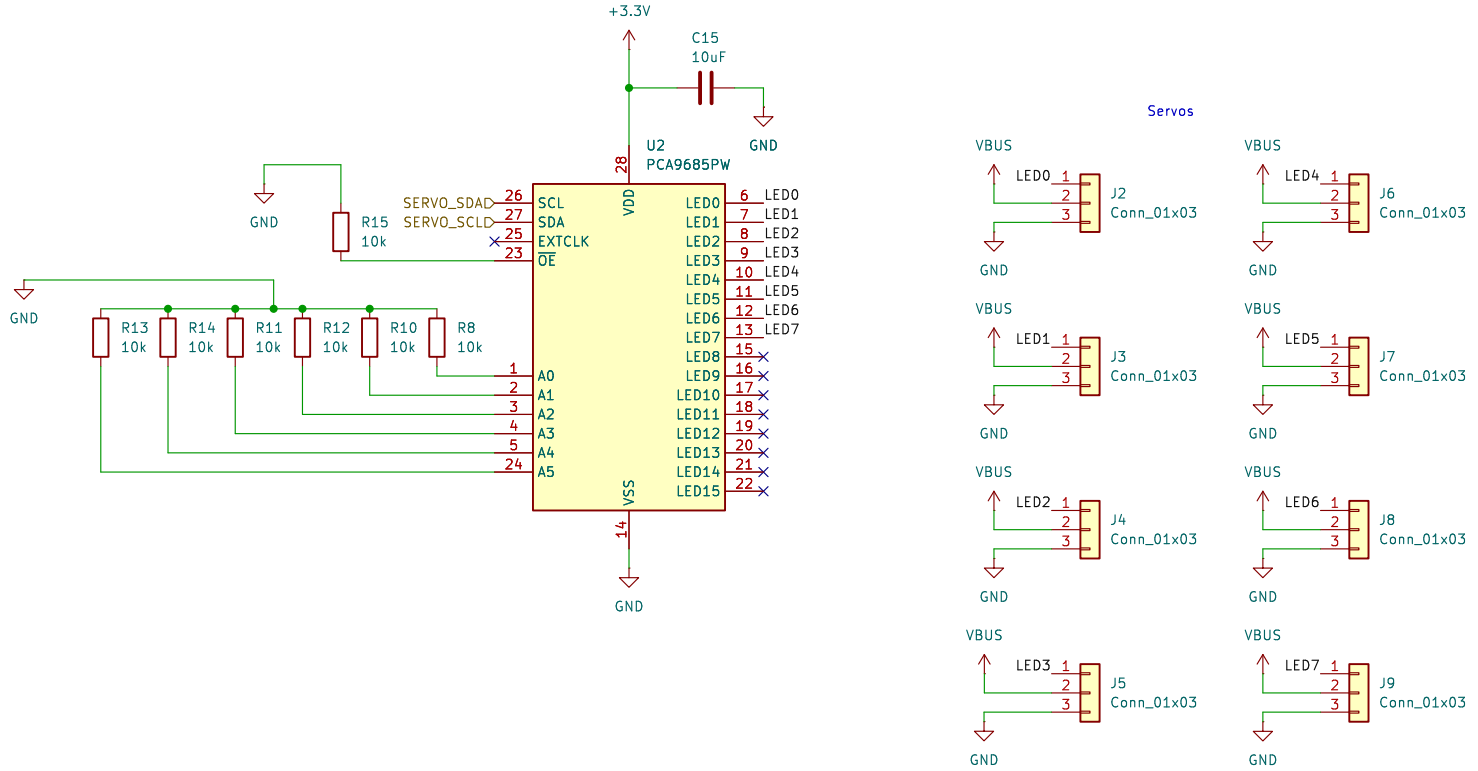

Sheet: /Servo Driver/
File: servodriver.kicad_sch

Title:

Size: A4	Date:	Rev:
KiCad E.D.A. 9.0.7		Id: 3/6

Here's our power scheme:

- VBUS is the input from the BEC (battery eliminator circuit) of the ESC. It's full of harmonics and is NOT clean at all.
We use this to drive servos and the rest of the power chain.
- The 5V net is actually 4.2V. This is because the LDO is used as the final step in filtering the BEC, so there's a voltage drop.
The only thing that is being fed by it is the 3.3V regulator, the radio and the Neopixels, which are all fine with the lower voltage
- The 3.3V net is true 3.3v and is the primary system voltage for the entire flight computer.

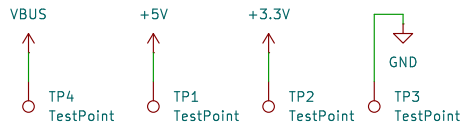

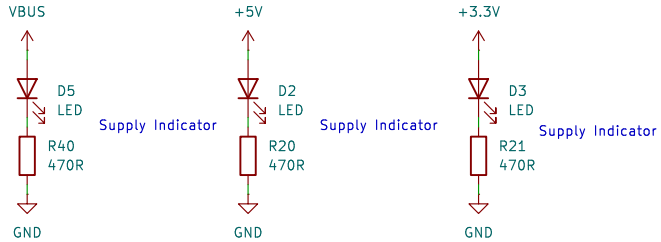

Filter curve

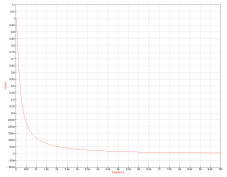

5V Input filter from BEC

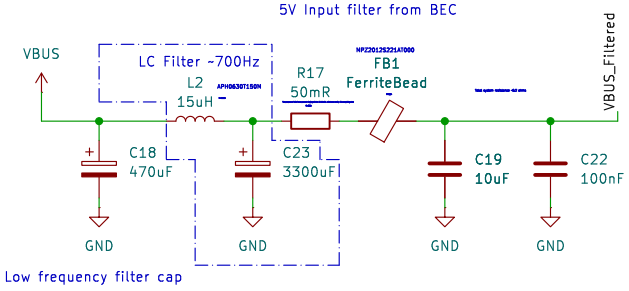

Cap omitted here because of previous caps

4.2V regulator

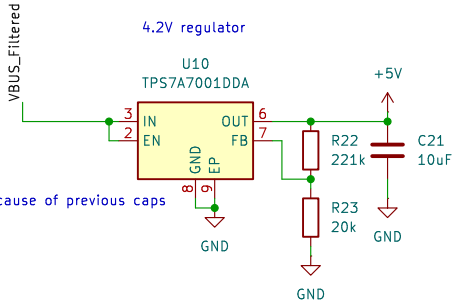

3.3V regulator

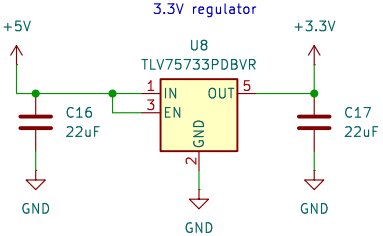

Sheet: /Power/ File: power.kicad_sch		
Title:		
Size: A4	Date:	**Rev:**
KiCad E.D.A. 9.0.7		Id: 4/6

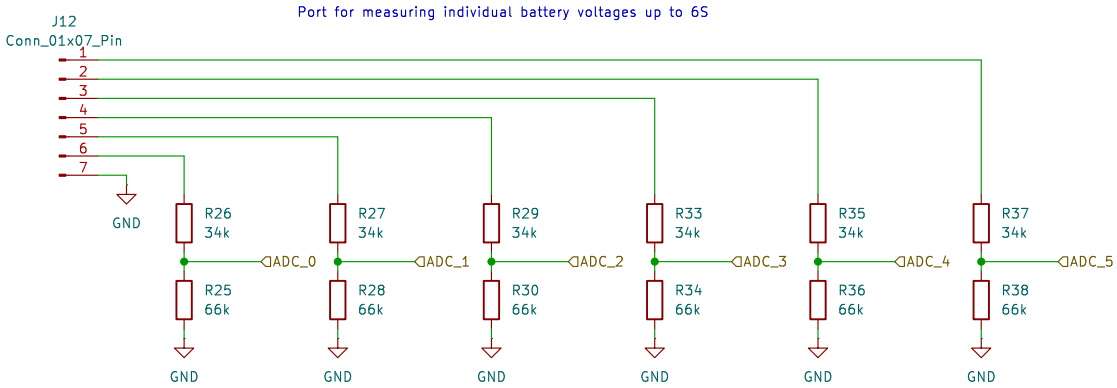

Sheet: /ADC/
File: adc_power.kicad_sch

Title:

Size: A4	Date:	Rev:
KiCad E.D.A. 9.0.7		Id: 5/6

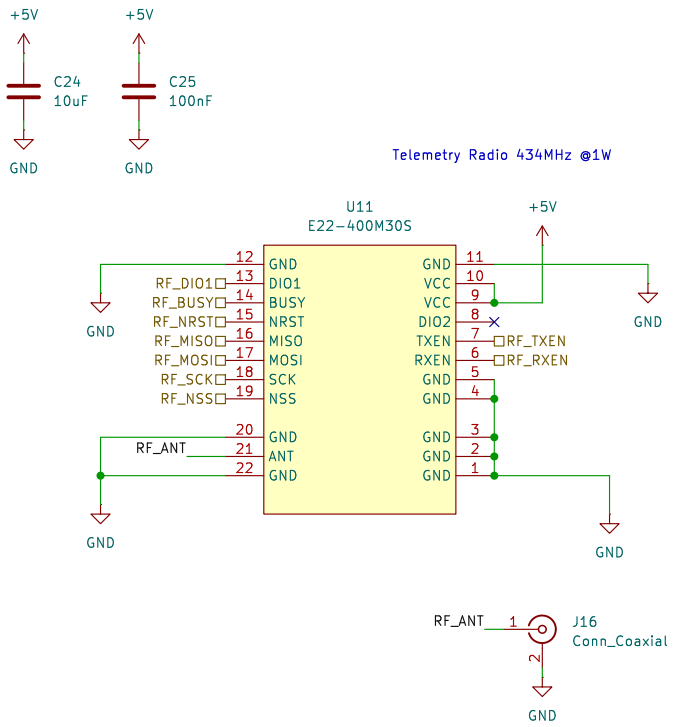

Sheet: /Radio/
File: radio.kicad_sch

Title:

Size: A4	Date:	**Rev:**
KiCad E.D.A. 9.0.7		Id: 6/6