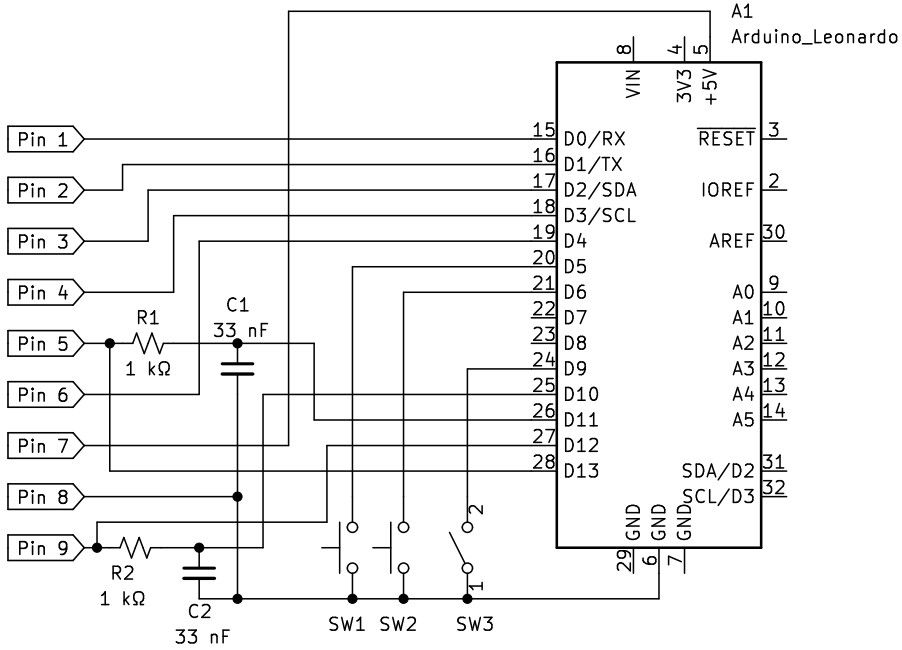

Sheet: /
File: ATARI_MULTI_DEVICE.kicad_sch

Title:

Size: A5	Date:	**Rev:**
KiCad E.D.A. kicad (6.0.7)		Id: 1/1