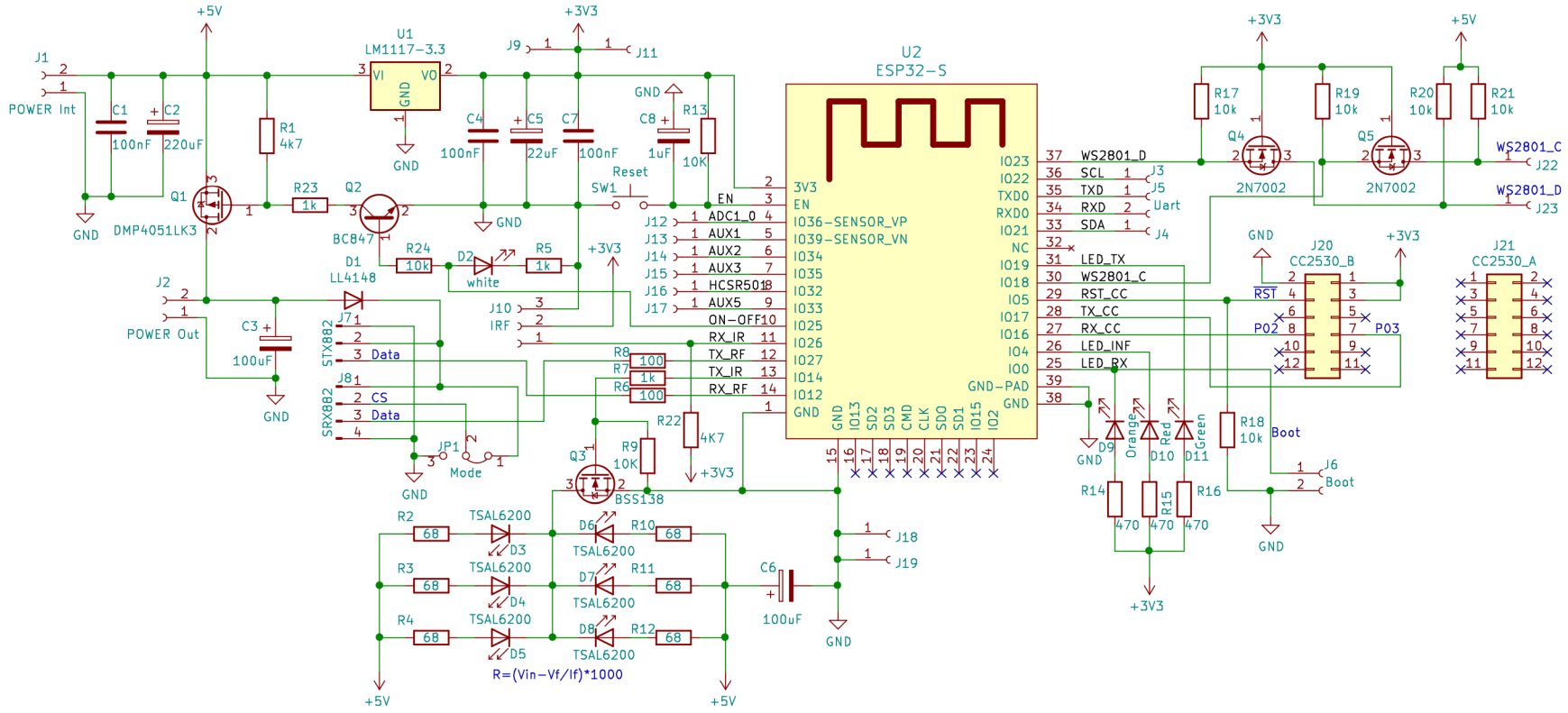

OpenMQTTGateway https://docs.openmqttgateway.com/
Tx IR 38KHz: GPIO14
Rx IR 38KHz: GPIO26 (HX1838)
Tx CC2530: GPIO17(RX)
Rx CC2530: GPIO16(TX)
Rst CC2530: GPIO5
Tx RF 433Mhz: GPIO27 (Module STX882)
Rx RF 433Mhz: GPIO12 (Module SRX882)
ON/OFF: GPIO25
Led WS2801: GPIO23 (Data), GPIO18(CLOCK)
Led_Send: GPIO19
Led_Receive: GPIO0 + boot button as full reset button (long press >10s)
Led_Info: GPIO4
HCSR501: GPIO32
I2C: GPIO21/GPIO22
ADC: GPIO36
Aux: GPIO33,34,35,39

Radioelf

Sheet: /
File: esp32_gateway.sch

Title: Gateway_ESP32

Size: A4	Date: 2020-11-20	**Rev: 0.0.2**
KiCad E.D.A. kicad 5.1.8-db983349188ubuntu18.04.1		Id: 1/1