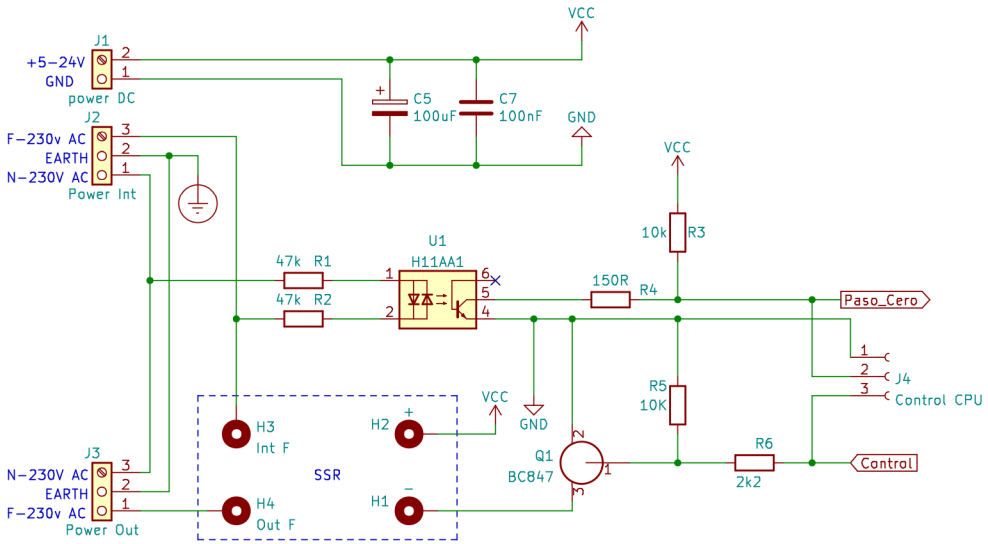

Radioelf

Sheet: /
File: dimmer.kicad_sch

Title:

Size: A4	Date: 2018-12-14	**Rev: 2**
KiCad E.D.A. kicad 6.0.0-rc1-unknown-d1e6c216e1~144~ubuntu18.04.1		Id: 1/1