ELECTRONIC ANALYTICAL CONTROL UNIT

TYPE 704 - VOLUME 4

TABLE OF CONTENTS

INDEX NO	DESCRIPTION	PART NO	ENG CHG
1	SYSTEM DIAGRAMS		
9.0	SH 1 POWER SUPPLY INDEX	503908	241159
9.0	SH 2 POWER SUPPLY INDEX	503909	242108
9.0	SH 3 POWER SUPPLY INDEX	503910	242108
9.01	COORDINATE & TERM DWGS INDEX	323294	241159
9.01.01	COORDINATE DWG PWR FR. #1	503911	241159
9.01.02	COORDINATE DWG PWR FR. #2	503912	241159
9.01.03	COORDINATE DWG PWR DIST FR.	503913	241159
9.01.04	SH 1 PDF INTER PWR FRAME CABLE TERMS	503914	241344
9.01.04	SH 2 PDF INTER PWR FRAME CABLE TERMS	503915	241848
9.01.05	PDF INTERMACHINE TERMS TB 159	503916	242108
9.01.06	PWR FR #1 RECT TERM PANELS	503917	241159
9.01.07	PWR FR #2 RECT TERM PANELS	503918	241159
9.01.08	PWR FR #1 MISC AC & SEQ CKT TERMS	503919	241159
9.01.09	PWR FR #2 MISC AC & SEQ CKT TERMS	503920	241159
9.02	SH 1 SEQUENCING CKTS	503921	241856
9.02	SH 2 SEQUENCING CKTS	503922	242108
9.02	SH 3 SEQUENCING CKTS	503923	241159
9.02	SH 4 SEQUENCING CKTS	503924	241344
9.02	SH 5 SEQUENCING CKTS	512700	242108
9.02	SH 6 SEQUENCING CKTS	512701	241159
9.02	SH 7 SEQUENCING CKTS	512702	241159
9.03	RECT FOR PLUS 150RY 3A PWR SUPPLY	323304	241856
9.04.01	RECT FOR PLUS 150VDC 60A PWR SPLY	323305	241159
9.04.02	VOLTAGE CTRL CKTS FOR PLUS 150 &	323306	241159
	MINUS 100V DC PWR SPLYS 3 SHEETS	323306	241159
9.04.03	RIPPLE SUPP FOR PLUS 150V 60A DC PWR SUPPLY	323307	241159
9.05.01	RECT FOR MINUS 250V 10A DC PWR SPLY	323308	241159
9.05.02	SH 1 VOLTAGE CTRL FOR MINUS 250 &	512703	241159
	PLUS 220 DC PWR SUPPLIES	512703	241159
9.05.02	SH 2 VOLTAGE CTRL FOR MINUS 250 &	512704	241159
	PLUS 220 DC PWR SUPPLIES	512704	241159
9.05.03	RIPPLE SUPP FOR MINUS 250V DC PWR SUPPLY	323310	241159
9.06.01	RECT FOR MINUS 130 3A PWR SUPPLY	512705	241856
9.06.02	VOLTAGE CTRL FOR MINUS 130V 3A DC PWR SUPPLY	512706	241159
9.07.01	RECT FOR MINUS 100V 60A DC PWR SPLY	323314	241159
9.07.03	RIPPLE SUPPRESSOR FOR MINUS 100V DC	323316	241159
	PWR SUPPLY	323316	241159
9.07.04	MINUS 100V DC DELAY CKT	512707	241344
9.08.01	RECT FOR PLUS 220V 16A DC PWR SPLY	323317	241159
9.08.03	RIPPLE SUPPRESSOR FOR PLUS 220V DC	323319	241159
	PWR SUPPLY	323319	241159
9.09.01	RECT FOR PLUS 15V 70A DC PWR SPLY	323320	241856
9.09.02	VOLTAGE CTRL UNIT FOR PLUS 15 DC &	323321	242247
	MINUS 30V DC PWR SPLY 2 SHEETS	323321	242247
9.10.02	VOLTAGE CTRL UNIT FOR PLUS 15 DC &	323321	242247
	MINUS 30V DC PWR SPLY 2 SHEETS	323321	242247
9.10.01	RECT FOR MINUS 30V 40A DC PWR SPLY	323322	241856
9.11.01	AC LINE REG L1, L2, & L3	323324	241856
9.12.01	AC LINE REG L1, L2, & L3	323324	241856
9.13.01	AC LINE REG L1, L2, & L3	323324	241856
9.11.02	AC LINE REG FOR LINES 1, 2 & 3	323325	241159
9.12.02	AC LINE REG FOR LINES 1, 2 & 3	323325	241159
9.13.02	AC LINE REG FOR LINES 1, 2 & 3	323325	241159
9.14	BLOWER MOTORS IN PWR FR. #1	323330	241159
9.15	BLOWER MOTORS IN PWR FR. #2	323331	241159
9.16.01	AC VOLTMETER CKT	323332	241159
9.16.02	SH 1 DC METERING	512708	241344
9.16.02	SH 2 DC METERING	512709	241159
9.17	SH 1 DC FUSING	512710	241454

TC 503659 EC 243096

INDEX NO	DESCRIPTION	PART NO	ENG CHG
9.17	SH 2 DC FUSING	512711	241454
9.17	SH 3 DC FUSING	512712	241454
9.17	SH 4 DC FUSING	512713	241454
9.17	SH 5 DC FUSING	512714	241159
9.17	SH 6 DC FUSING	512715	241454
9.17.01	DC FUSE LOCATION CHART	512716	242496
9.18	SH 1 REG AC FUSING	512717	241666
9.18	SH 2 REG AC FUSING	512718	241666
9.18	SH 3 REG AC FUSING	512719	241666
9.18	SH 4 REG AC FUSING	512720	241666
9.18	SH 5 REG AC FUSING	512721	241666
9.18	SH 6 REG AC FUSING	512722	241159
9.18.01	REG AC FUSE LOCATION CHART	512723	242270
9.19	SH 1 UNREG AC FUSING	512724	241666
9.19	SH 2 UNREG AC FUSING	512725	241666
9.19	SH 3 UNREG AC FUSING	512726	241666
9.19	SH 4 UNREG AC FUSING	512727	241666
9.19	SH 5 UNREG AC FUSING	512728	241666
9.19	SH 6 UNREG AC FUSING	512729	241771
9.19.01	UNREG AC FUSE LOCATION	512730	242496
9.20	SH 1 FUSE ALARM CKT FRMS 1 & 2 & PDF	512731	241159
9.20	SH 2 FUSE ALARM CKT FRMS 1 & 2 & PDF	512732	241159
9.21	FAST DISCHARGE RES & RELAY CONN	512733	241159
9.23	NORMAL OFF & DC OFF INTK CIRCUITS	512734	242504
9.23.01	PHASE PROT. INTLOCK	503666	241848
9.24	REG AC FUSING FRAME #1	512735	241159
9.25	UNREG AC FUSING FRAME #1	512736	241159
9.26	REG AC FUSING FRAME #2	512737	241159
9.27	UNREG AC FUSING FRAME #2	512738	241159
9.28	AC OUTLET CKT	512739	241159
9.29	SH 1 WIRING DIAGRAM-MAIN FRAME SERVICE	512740	241159
9.29	SH 2 WIRING DIAGRAM-MAIN FRAME SERVICE	512741	242921
9.29	SH 3 WIRING DIAGRAM-MAIN FRAME SERVICE	512742	242496
9.29	SH 4 WIRING DIAGRAM-MAIN FRAME SERVICE	512743	241159
9.29	SH 5 TERMINALS ON SERVICE PNL ON MAIN FRAME	512744	241159
9.29.05	PLUGGABLE UNIT LOCN CHART	503625	242760
9.30.01	INTERNAL AC SERVICE WIRING	509115	241771
9.30.02	INTERNAL DC SERVICE WIRING	509116	241944
9.30.03	TERMINAL BOARD ASSIGNMENTS	509117	241771
9.32	SH 1 WD-DRUM FRAME	512749	241159
9.32	SH 2 WD-DRUM FRAME	512750	241159
9.32	SH 3 WD-DRUM FRAME	512751	241159
9.32	SH 4 WD-DRUM FRAME	512752	241159
9.32	SH 5 WD-DRUM FRAME	512753	241159
9.32	SH 6 WD-DRUM FRAME	512754	241159
10.5	WD & TIMING CHART CARD READER-711 6 SHEETS	323702	241644
10.5	WD & TIMING CHART CARD	513305	242084
	READER-711 MOD 2 6 SHEETS	513305	242084
11.6	WD & TIMING CHART CARD RECORDER 4 SHEETS	322930	242759
12.7	WD & TIMING CHART PRINTER 12 SHEETS	321448	241767

2 PREVIOUS ENG CHGS.

09/29/55	241842
10/27/55	241955
01/16/56	242328
05/23/56	242877
08/02/56	243096

END

POWER SUPPLY

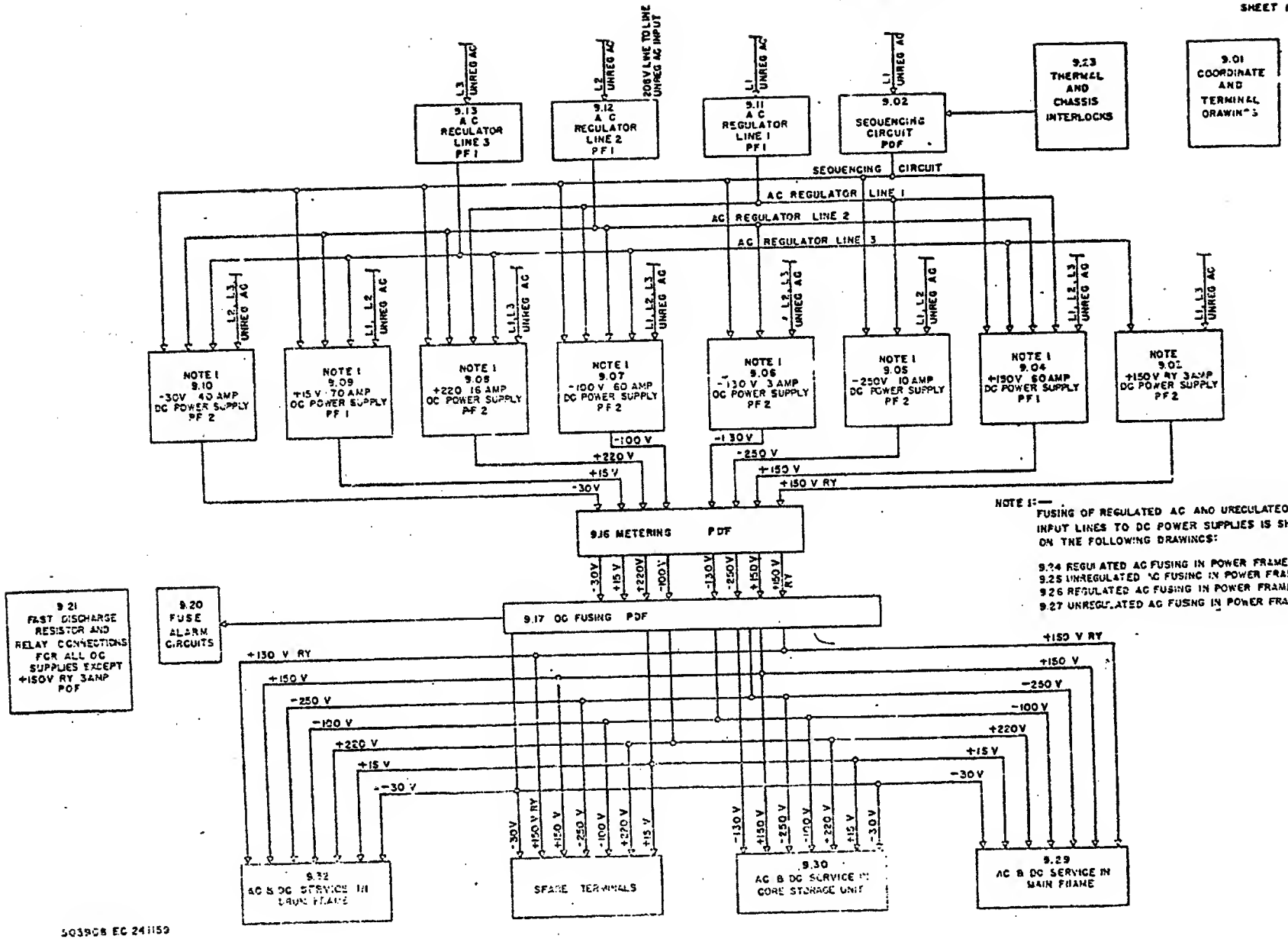

NOTE 1:—
FUSING OF REGULATED AC AND UNREGULATED AC INPUT LINES TO DC POWER SUPPLIES IS SHOWN ON THE FOLLOWING DRAWINGS:

9.24 REGULATED AC FUSING IN POWER FRAME 1
9.25 UNREGULATED AC FUSING IN POWER FRAME 1
9.26 REGULATED AC FUSING IN POWER FRAME 2
9.27 UNREGULATED AC FUSING IN POWER FRAME 2

503908 EC 241159

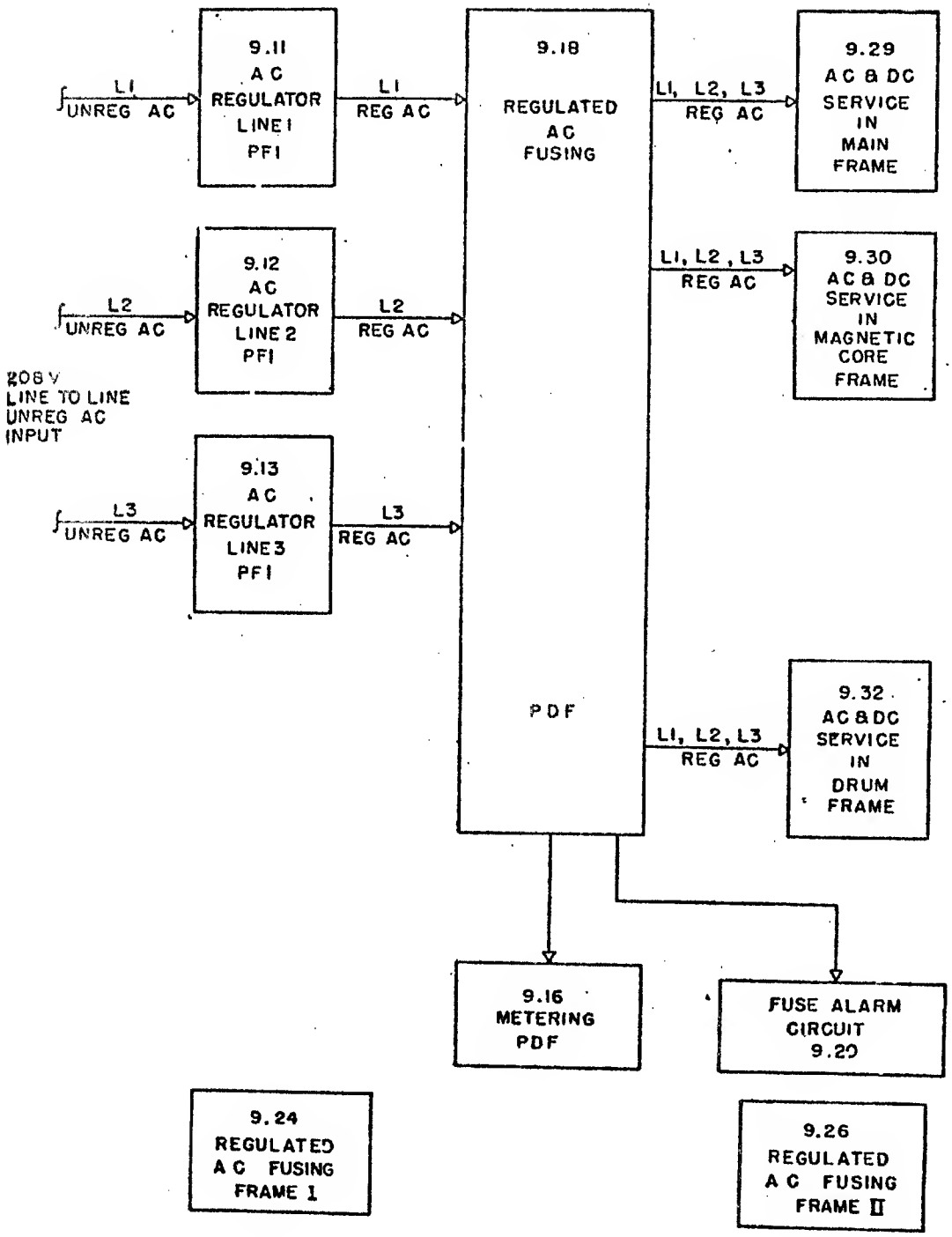
L1
UNREG AC
9.11
AC
REGULATOR
LINE 1
PF1
L1
REG AC
9.18
REGULATED
AC
FUSING
L1, L2, L3
REG AC
9.29
AC & DC
SERVICE
IN
MAIN
FRAME
L2
UNREG AC
9.12
AC
REGULATOR
LINE 2
PF1
L2
REG AC
L1, L2, L3
REG AC
9.30
AC & DC
SERVICE
IN
MAGNETIC
CORE
FRAME
208 V
LINE TO LINE
UNREG AC
INPUT
L3
UNREG AC
9.13
AC
REGULATOR
LINE 3
PF1
L3
REG AC
PDF
L1, L2, L3
REG AC
9.32
AC & DC
SERVICE
IN
DRUM
FRAME
9.16
METERING
PDF
FUSE ALARM
CIRCUIT
9.20
9.24
REGULATED
AC FUSING
FRAME I
9.26
REGULATED
AC FUSING
FRAME II

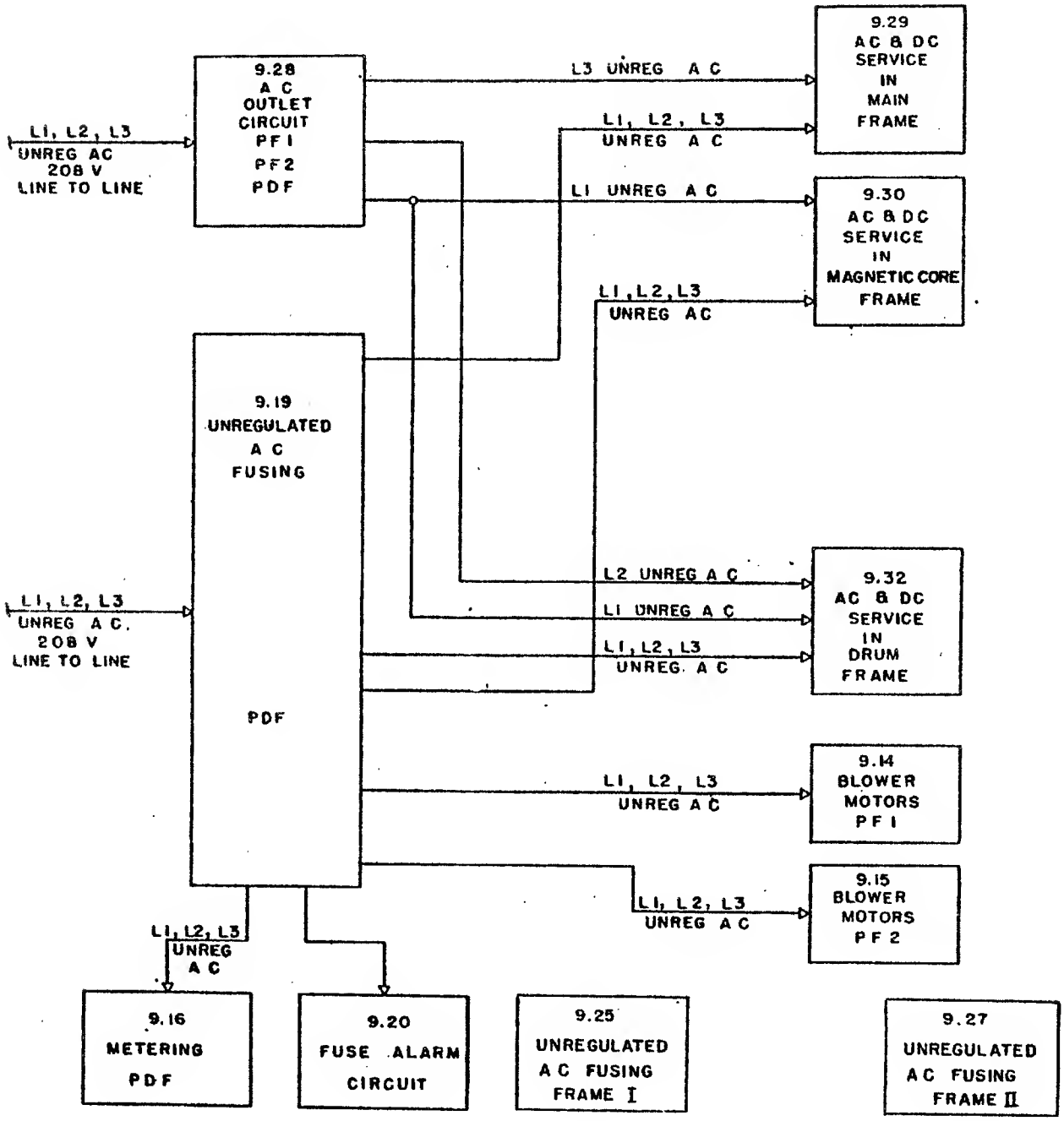

503910 EC 242108

9.01.01
COORDINATE
DRAWING OF
POWER FRAME 1

9.01.02
COORDINATE
DRAWING OF
POWER FRAME 2

9.01.03
COORDINATE
DRAWING OF
POWER
DISTRIBUTION
FRAME

9.01.04
POWER DIST FR
INTERPOWER FRAME
CABLE
TERMINALS

9.01.05
POWER DIST FR
INTERMACHINE
FRAME CABLE
TERMINALS

9.01.06
POWER FRAME 1
RECTIFIER
TERMINALS

9.01.07
POWER FRAME 2
RECTIFIER
TERMINALS

9.01.08
POWER FRAME 1
MISCELLANEOUS
A C AND
SEQUENCING
CIRCUIT TERMINALS

9.01.09
POWER FRAME 2
MISCELLANEOUS
A C AND
SEQUENCING
CIRCUIT TERMINALS

POWER FRAME # 1

COORDINATE DRAWING

9.01.01

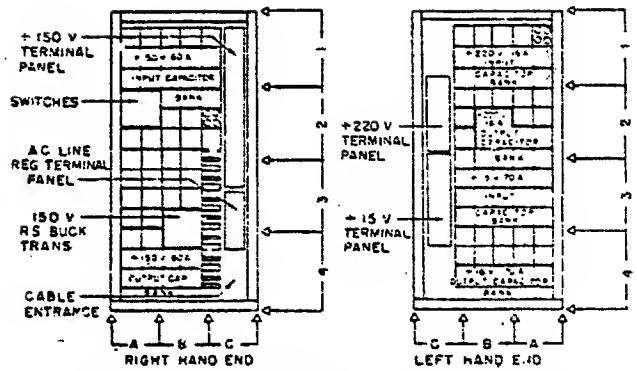

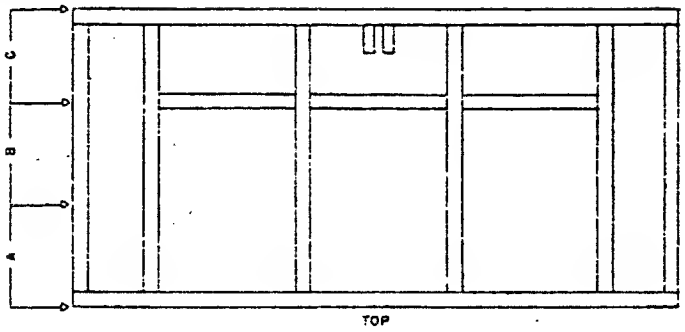

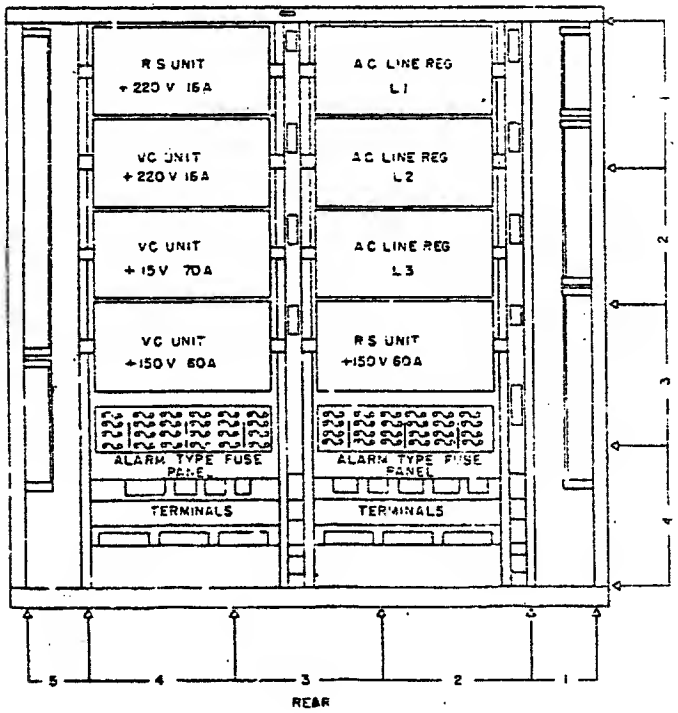

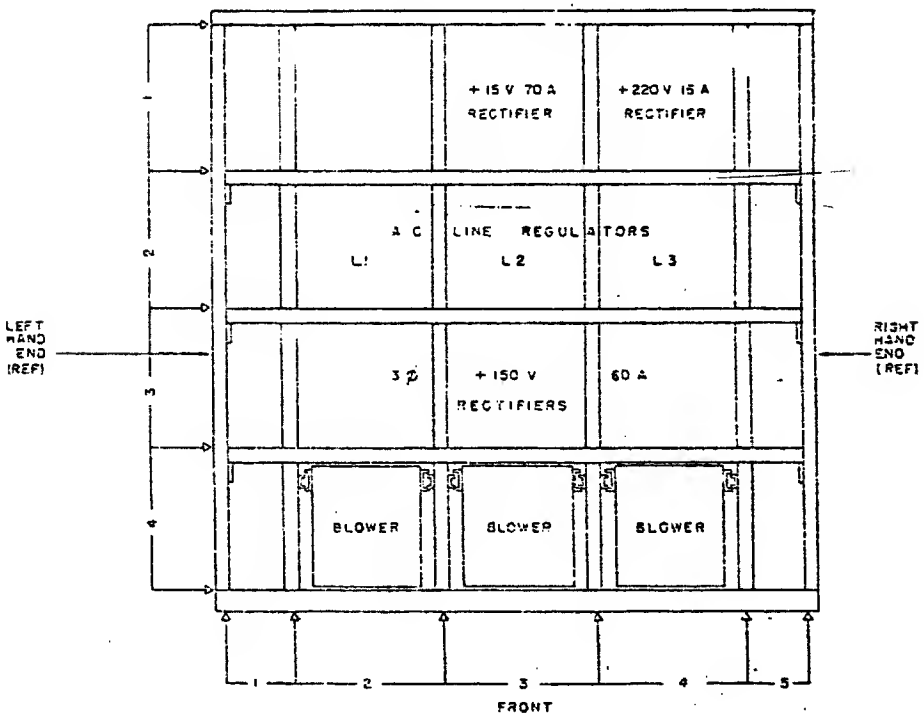

503911 EC 24:159

POWER FRAME # 2

COORDINATE DRAWING

9.01.02

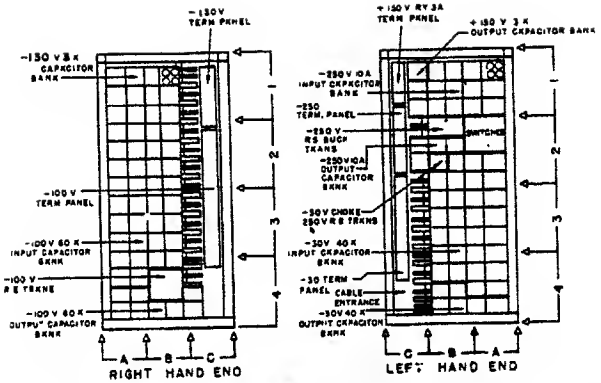

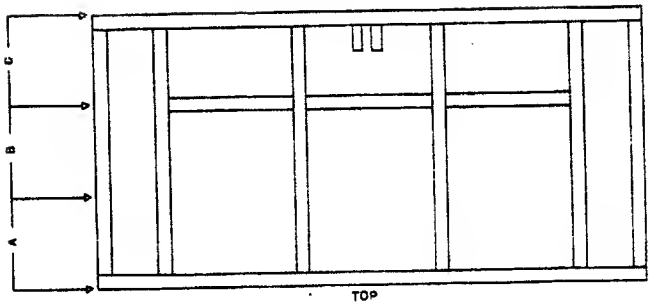

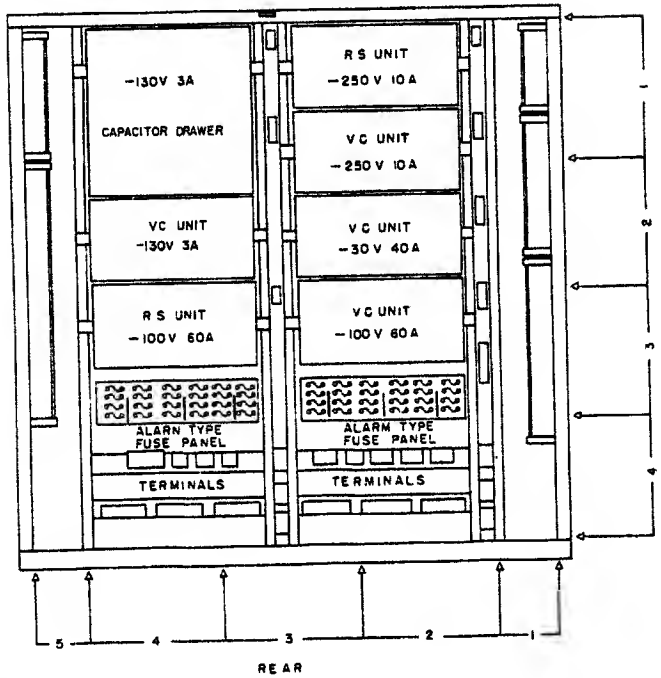

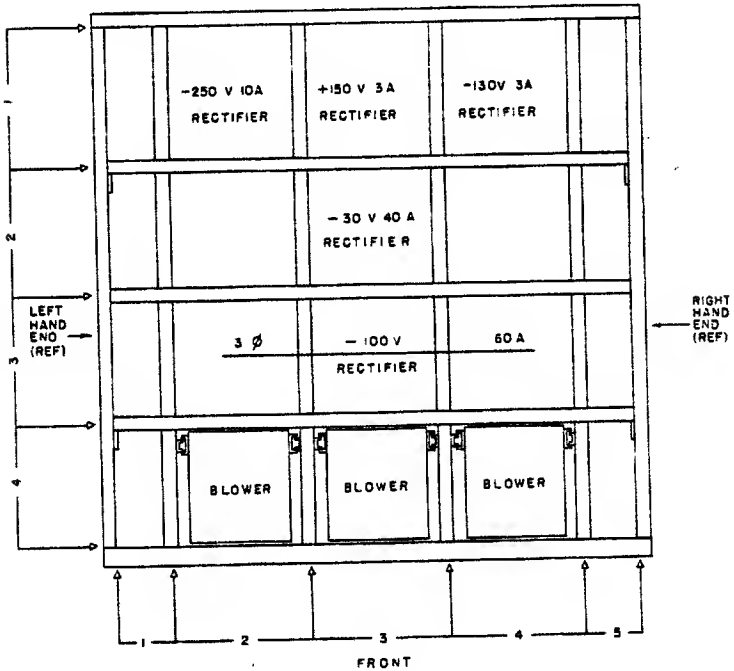

503912 EC 241159

POWER DISTRIBUTION FRAME
INTER POWER FRAME CABLE TERMINALS
VIEW "B"

9.01.04

SHEET 1 OF 2

* CONNECTS ONLY TO TB 105-4 PF1- 53Z (NEUTRAL OF AC REGULATOR)

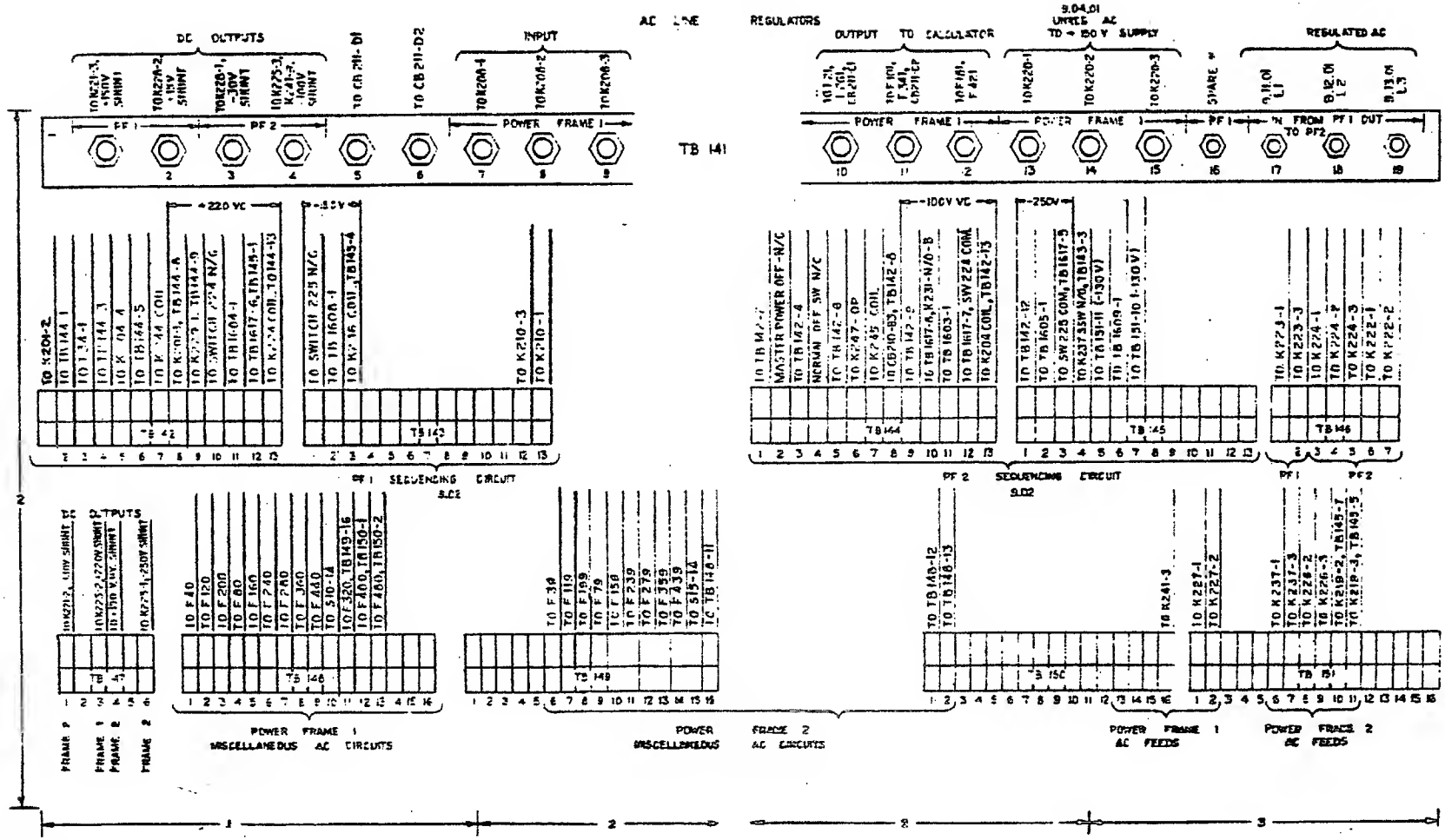

SD5514 EC 241344

INTER POWER FRAME CABLE TERMINALS

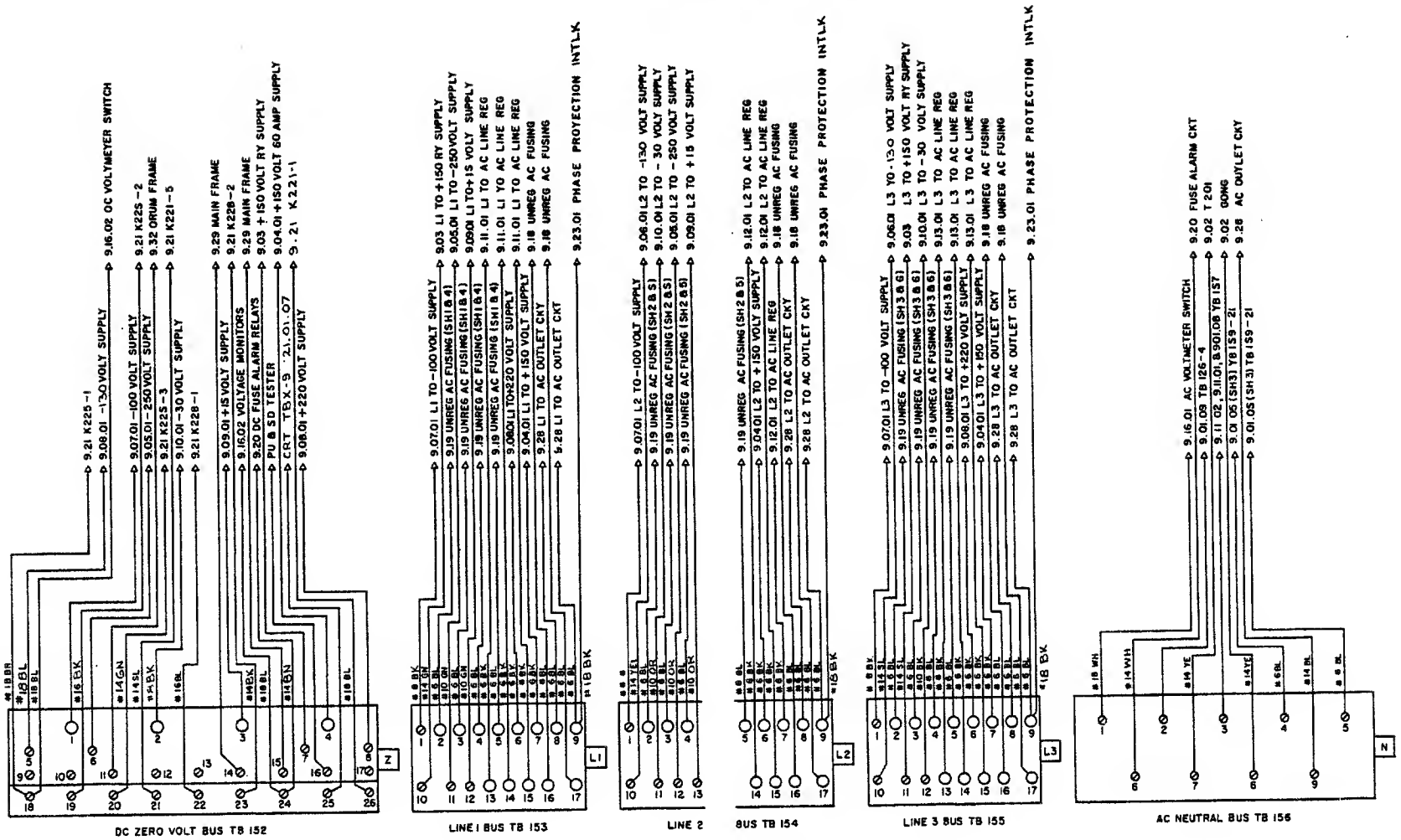

VIEW "B"

PDF INTERMACHINE TERMINALS
(TB 159)

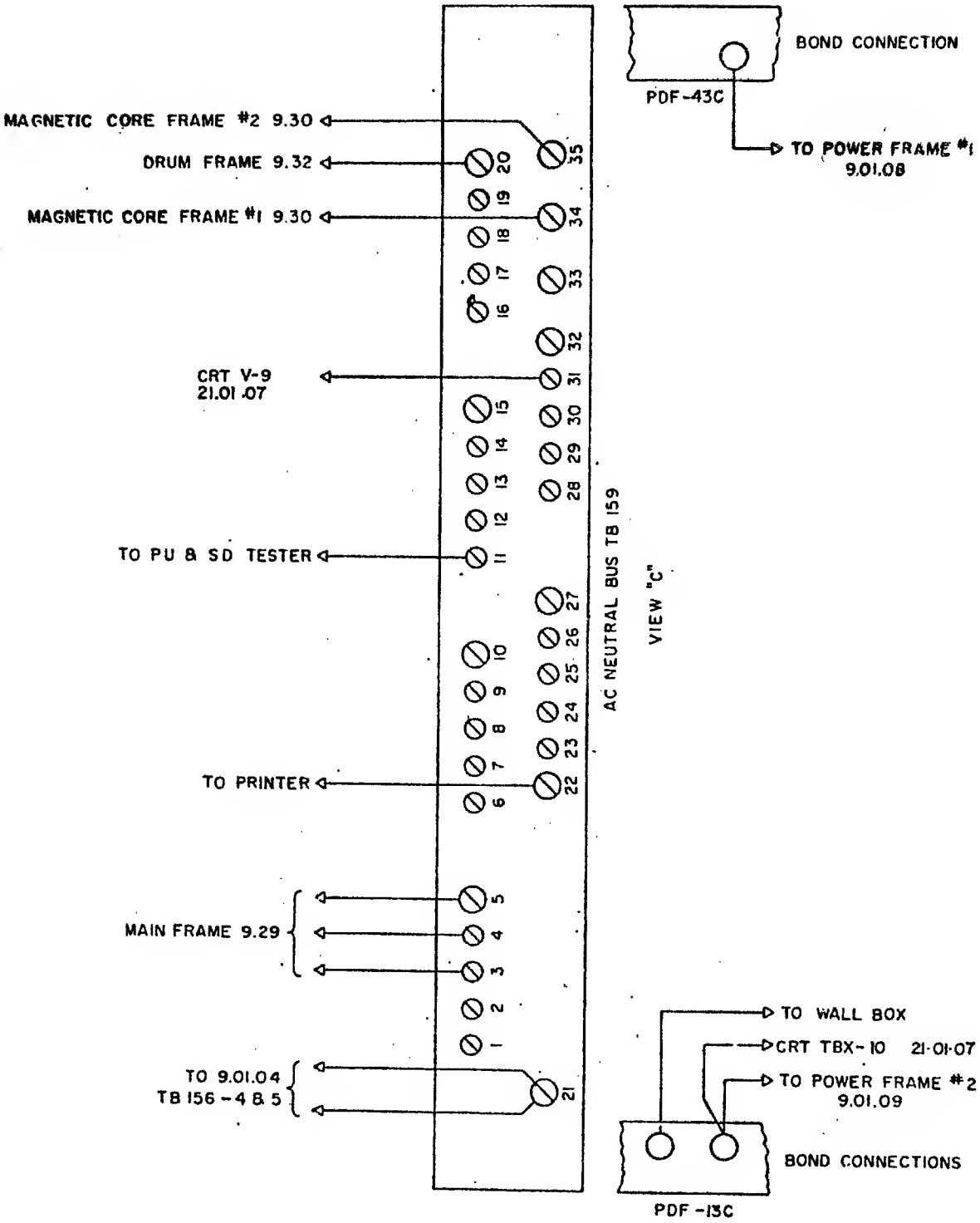

503916 EC242108

TOP

RIGHT HAND END

TB 104

21 − INPUT + 22

+150 TERMINAL PANEL
LOCATION PF1-51C
PF1-52C

51 − OUTPUT 52 +

208 VOLTS AC UNREG
53 L1
54 L2
55 L3

TB 102

+ 1 INPUT 4 −

− 19 OUTPUT + 20

L1 21
208 V
UNREG AC

L3 23
+220 TERMINAL PANEL
LOCATION: PF1-12C

TB 103

+ 11 INPUT − 14

− 57 OUTPUT + 58

59 L1
208 V
UNREG AC

62 L2
+15 TERMINAL PANEL

TB 105

UNREG AC
1 L1
2 L2
3 L3
4 N

REG AC
5 L1
6 L2
7 L3

AC LINE REG
TERMINAL PANEL
LOCATION: PF1-53C
PF1-54C

POWER FRAME NO 2 RECTIFIER TERMINAL PANELS

9.01.07

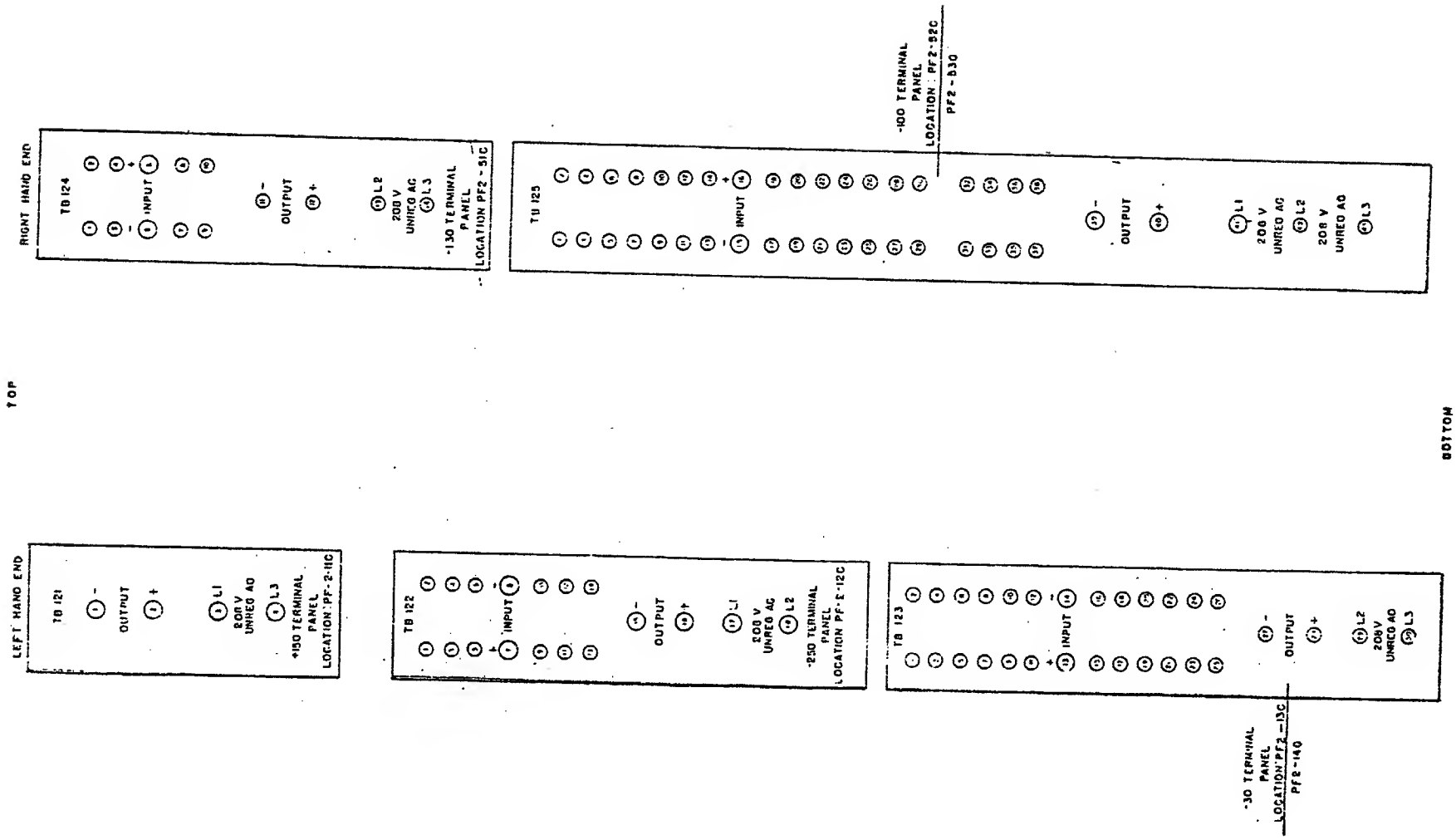

503918EC241159

503518 EC 241159

POWER FRAME NO 1 (VIEW "C") MISCELLANEOUS A.C. AND SEQUENCING CIRCUIT TERMINALS

9.01.08

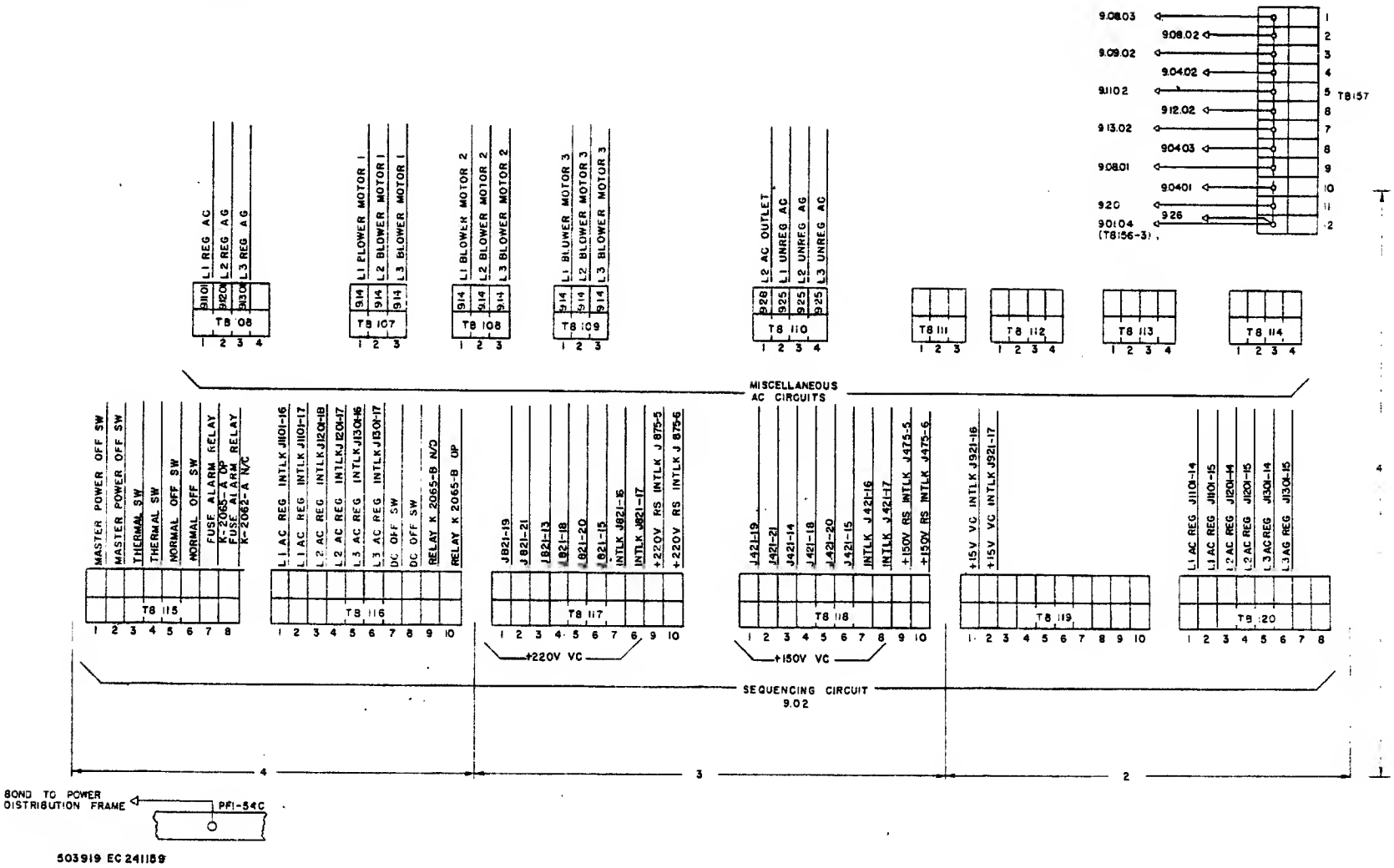

503919 EC 241159

POWER FRAME NO 2 (VIEW "C") MISCELLANEOUS AC & SEQUENCING CIRCUIT TERMINALS

9.01.09

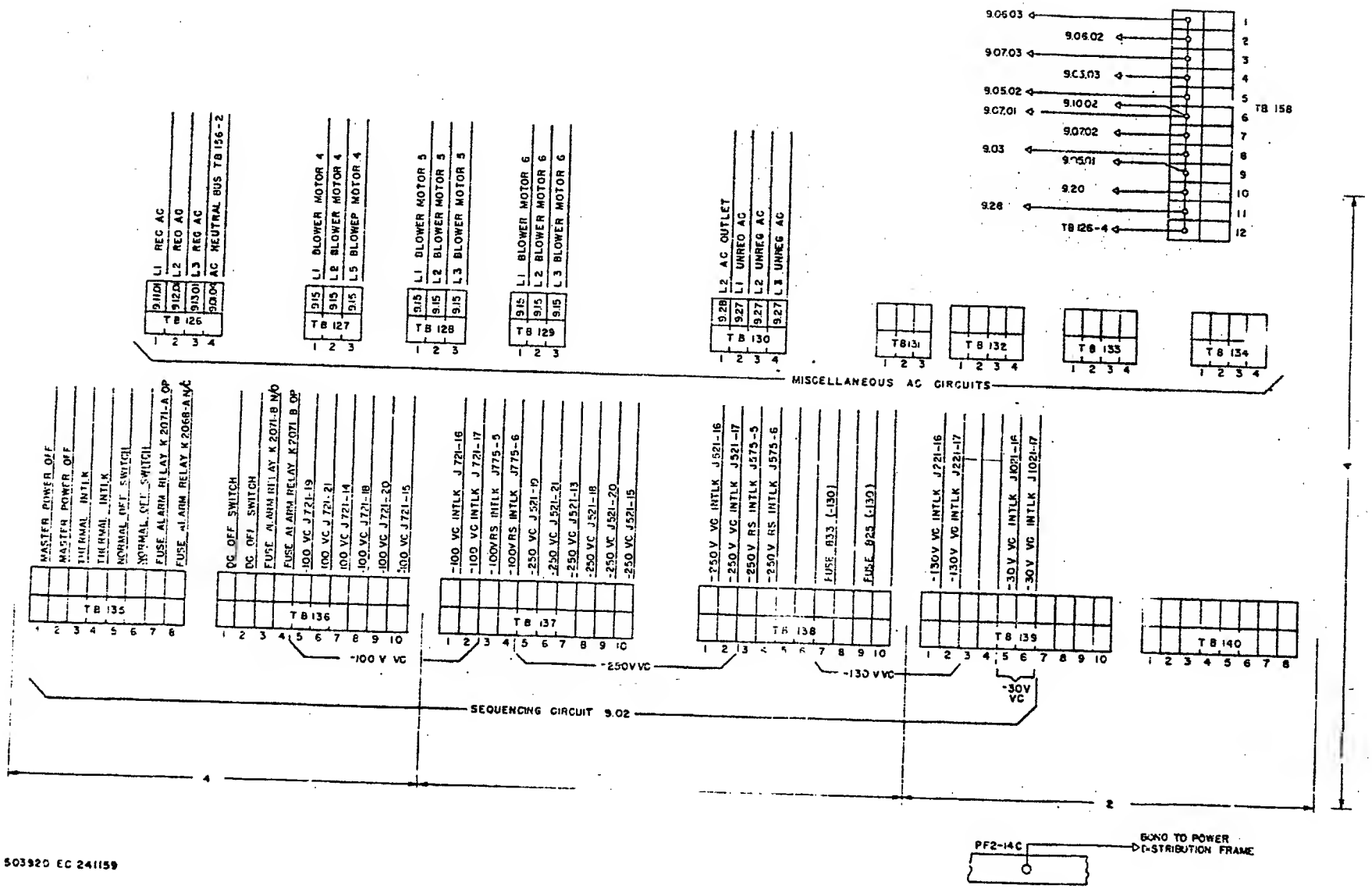

503920 EC 241159

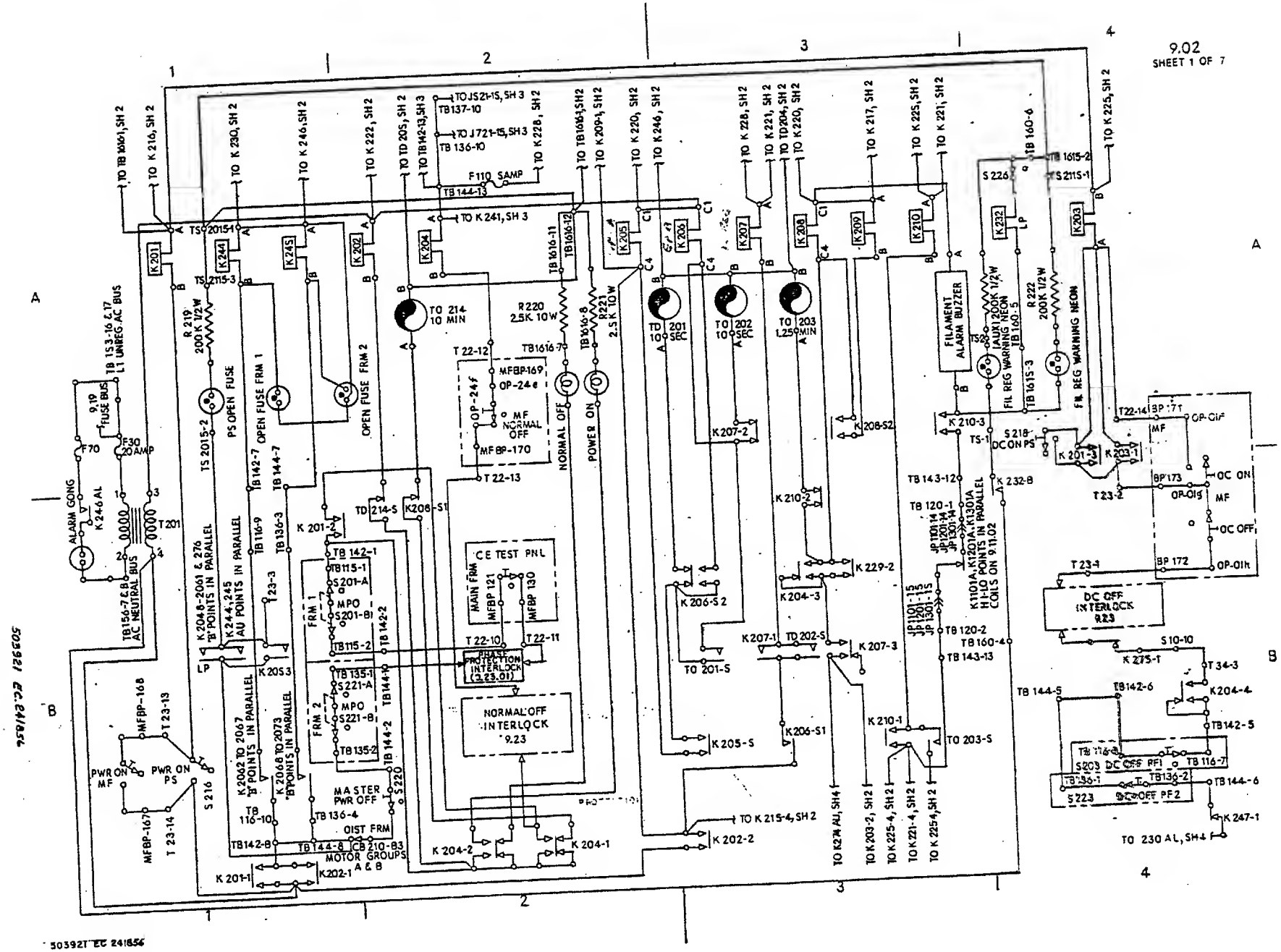
9.02
SHEET 1 OF 7
TO TB 1001, SH 2
TO K 216, SH 2
TO K 230, SH 2
TO K 246, SH 2
TO K 222, SH 2
TO TD 205, SH 2
TO TB 142-13, SH 3
TO JS21-15, SH 3
TB 137-10
TO J721-15, SH 3
TB 136-10
TO K 228, SH 2
F110 SAMP
TB 144-13
TO K 241, SH 3
TO TB 1616-1, SH 2
TO K 209-1, SH 2
TO K 220, SH 2
TO K 246, SH 2
TO K 228, SH 2
TO K 221, SH 2
TO TD204, SH 2
TO K 220, SH 2
TO K 217, SH 2
TO K 225, SH 2
TO K 221, SH 2
TO K 225, SH 2
TB 160-6
TB 1615-2
TS 211S-1
S 226
K 201
K 244
K 245
K 202
K 204
K 205
K 206
K 207
K 208
K 209
K 210
K 232
K 203
TS 2015-1
TS 2115-3
R 219 200K 1/2W
TS 2015-2
PS OPEN FUSE
OPEN FUSE FRM 1
OPEN FUSE FRM 2
TO 214 10 MIN
R 220 2.5K 10W
TB 1616-11
TB 1616-12
TB 1616-8
R 221 2.5K 10W
TB 1616-7
TD 201 10 SEC
TO 202 10 SEC
TO 203 1.25 MIN
FILAMENT ALARM BUZZER
TS 2
(AUX) 200K 1/2W
TB 160-5
R 222 200K 1/2W
FIL REG WARNING NEON
TB 161S-3
FIL REG WARNING NEON
T 22-12
MF BP-169
OP-24f
OP-24e
MF NORMAL OFF
MF BP-170
T 22-13
NORMAL OFF
POWER ON
K 207-2
K 208-S2
K 210-3
TS-1
S 218 DC ON PS
K 201-3
K 203-1
T 22-14
BP 171
OP-01f
MF
OC ON
BP 173
OP-01s
MF
OC OFF
BP 172
OP-01h
T 23-2
T 23-4
DC OFF INTERLOCK 9.23
S 10-10
K 275-1
T 34-3
K 204-4
TB 142-5
TB 144-5
TB 142-6
TB 116-8
S 203 DC OFF PF1
TB 116-7
TB 136-1
TB 136-2
S 223 DC OFF PF2
TB 144-6
K 247-1
TO 230 AL, SH 4
TB 143-12
TB 120-1
K 232-8
JP 1101-14
JP 1201-14
JP 1301-14
K1101A, K1201A, K1301A
HI-LO POINTS IN PARALLEL
COILS ON 9.11.02
JP 1101-15
JP 1201-15
JP 1301-15
TB 120-2
TB 160-4
TB 143-13
K 229-2
K 204-3
K 207-1
TD 202-S
K 207-3
K 210-2
K 210-1
TO 203-S
K 206-S1
K 205-S
TO 201-S
K 206-S2
TO K 215-4, SH 2
K 202-2
TO K 203-2, SH 2
TO K 225-4, SH 2
TO K 221-4, SH 2
TO K 254, SH 2
TB 153-16 & 17
L1 UNREG. AC BUS
9.19 FUSE BUS
F70
F30 20 AMP
ALARM GONG
K 246 AL
T 201
TB 156-7 & 8
AC NEUTRAL BUS
K 2048-2061 & 276
"B" POINTS IN PARALLEL
K 244, 245
AU POINTS IN PARALLEL
TB 142-7
TB 144-7
TB 116-9
TB 136-3
T 23-3
K 201-2
TD 214-S
K 208-S1
TB 142-1
TB 115-1
S 201-A
MPO
S 201-B
TB 115-2
TB 142-2
FRM 1
TB 135-1
S 221-A
MPO
S 221-B
TB 135-2
TB 144-1
TB 144-2
FRM 2
K 205-3
LP
K 2062 TO 2067
"B" POINTS IN PARALLEL
K 2068 TO 2073
"B" POINTS IN PARALLEL
MF BP-168
T 23-13
PWR ON MF
PWR ON PS
S 216
MF BP-167
T 23-14
TB 116-10
TB 136-4
MASTER PWR OFF
S 220
DIST FRM
TB 142-8
TB 144-8
CB 210-B3
MOTOR GROUPS A & B
K 201-1
K 202-1
CE TEST PNL
MAIN FRM
MF BP 121
MF BP 130
T 22-10
T 22-11
BRAKE PROTECTION INTERLOCK (3.23.01)
NORMAL OFF INTERLOCK 9.23
K 204-2
K 204-1
TO K 2?4 AU, SH 4

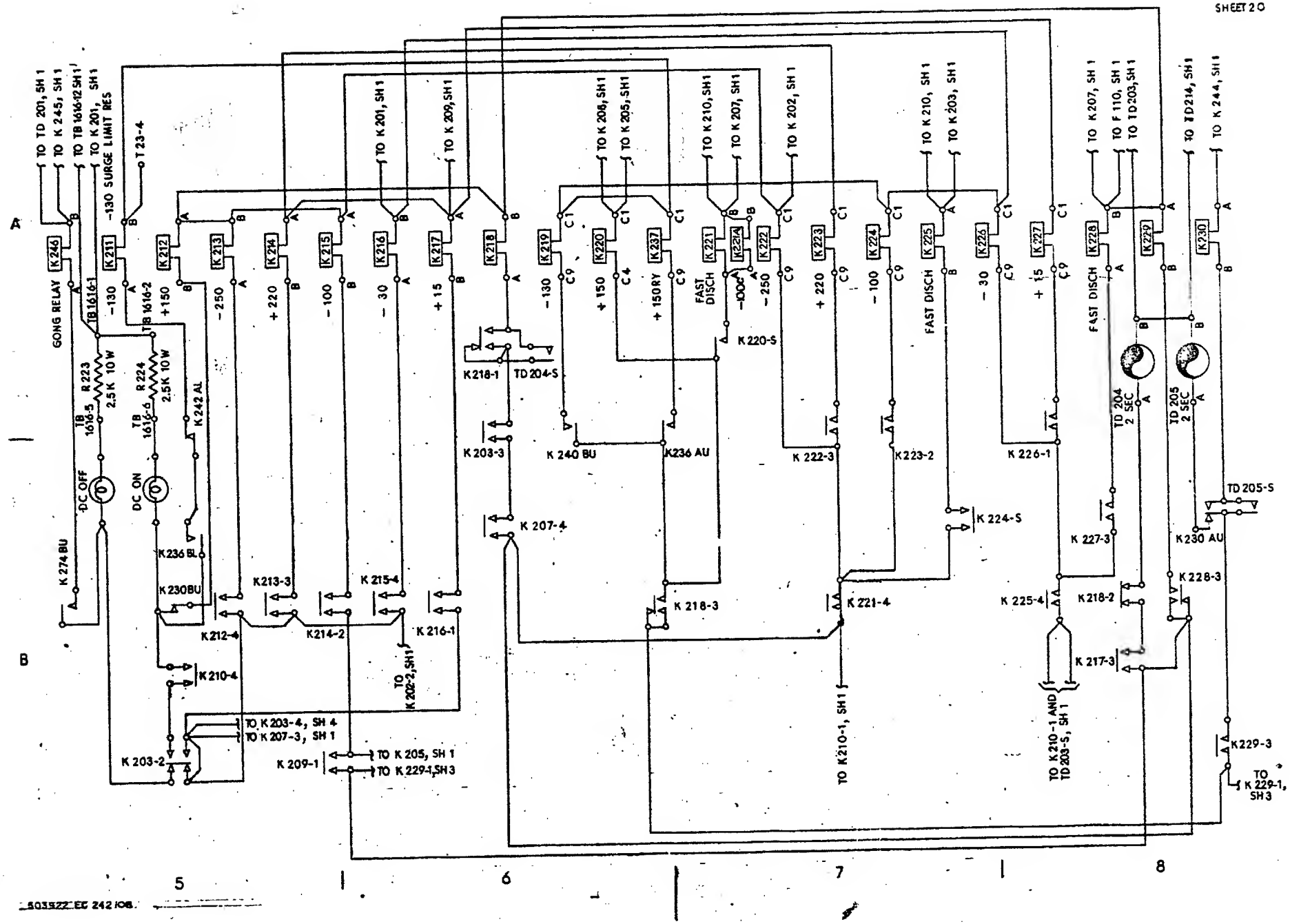

503522 EC 242 108

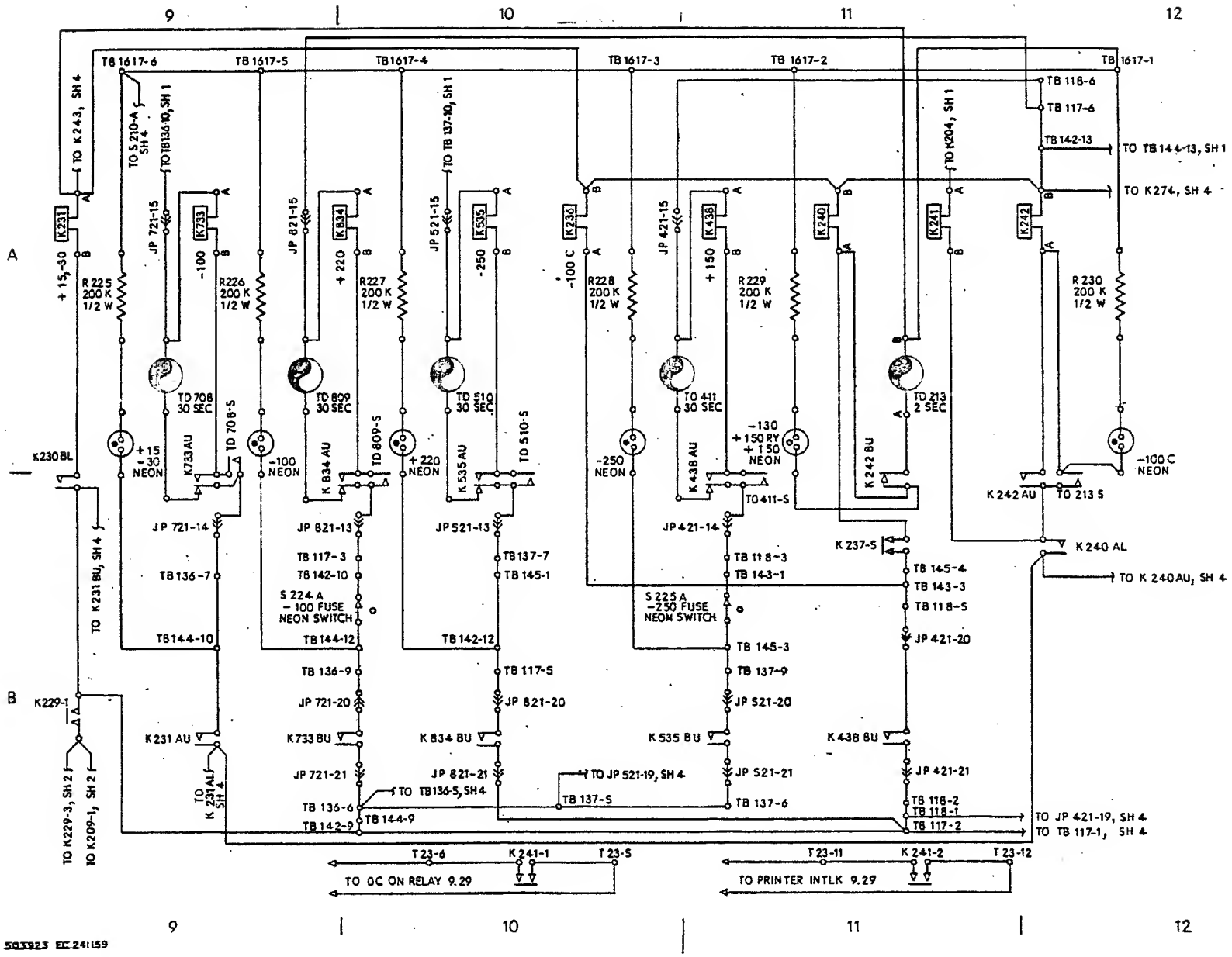
9
10
11
12
A
B
TB 1617-6
TB 1617-5
TB 1617-4
TB 1617-3
TB 1617-2
TB 1617-1
TO K 243, SH 4
TO S 210-A SH 4
TO TB136-10, SH 1
TO TB 137-10, SH 1
TO K204, SH 1
TB 118-6
TB 117-6
TB 142-13
TO TB 144-13, SH 1
TO K 274, SH 4
K231
K733
K834
K535
K236
K438
K240
K241
K242
+15-30
JP 721-15
JP 821-15
JP 521-15
JP 421-15
-100
+220
-250
-100 C
+150
R 225 200 K 1/2 W
R226 200 K 1/2 W
R227 200 K 1/2 W
R228 200 K 1/2 W
R229 200 K 1/2 W
R 230 200 K 1/2 W
TD 708 30 SEC
TD 809 30 SEC
TD 510 30 SEC
TD 411 30 SEC
TD 213 2 SEC
+15 30 NEON
-100 NEON
+220 NEON
-250 NEON
-130 +150 RY +150 NEON
-100 C NEON
K230BL
K733 AU
TD 708-S
K 834 AU
TD 809-S
K 535 AU
TD 510-S
K 438 AU
TO 411-S
K 242 BU
K 242 AU
TO 213 S
K 240 AL
TO K 240 AU, SH 4
JP 721-14
JP 821-13
JP 521-13
JP 421-14
TB 136-7
TB 117-3
TB 142-10
TB 137-7
TB 145-1
TB 118-3
TB 143-1
K 237-S
TB 145-4
TB 143-3
TB 118-5
S 224 A -100 FUSE NEON SWITCH
S 225 A -250 FUSE NEON SWITCH
TB 144-10
TB 144-12
TB 142-12
TB 145-3
TB 137-9
JP 421-20
TB 136-9
TB 117-5
JP 721-20
JP 821-20
JP 521-20
K229-1
K 231 AU
K733 BU
K 834 BU
K 535 BU
K 438 BU
JP 721-21
JP 821-21
JP 521-21
JP 421-21
TO JP 521-19, SH 4
TO TB136-5, SH 4
TB 137-5
TB 137-6
TB 136-6
TB 142-9
TB 144-9
TB 118-2
TB 118-1
TB 117-2
TO JP 421-19, SH 4
TO TB 117-1, SH 4
TO K 231 BU, SH 4
TO K 231 AU SH 4
TO K229-3, SH 2
TO K209-1, SH 2
T 23-6
K 241-1
T 23-5
T 23-11
K 241-2
T 23-12
TO OC ON RELAY 9.29
TO PRINTER INTLK 9.29

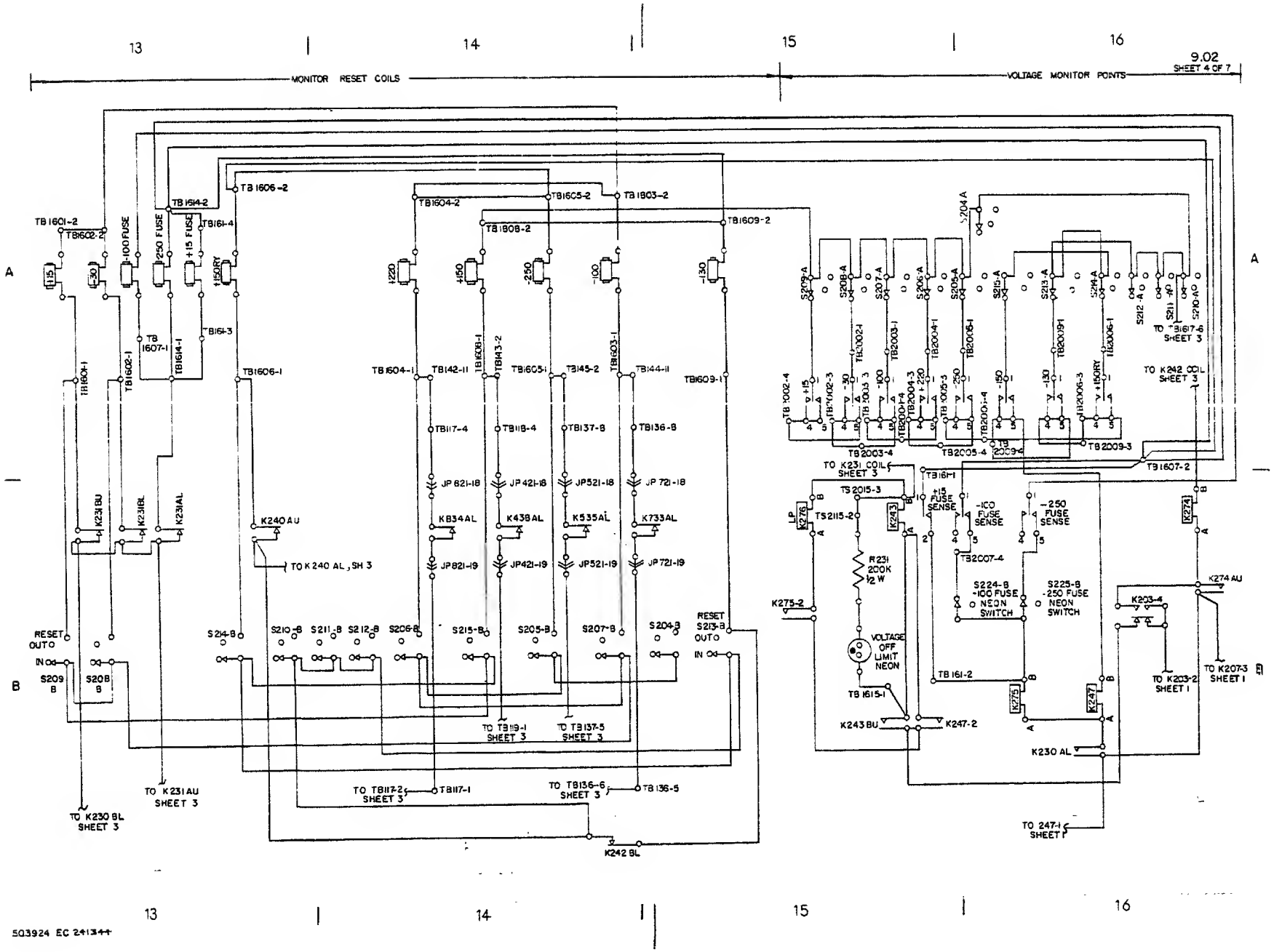

503924 EC 241344

TIMING CHART FOR SEQUENCING CIRCUIT

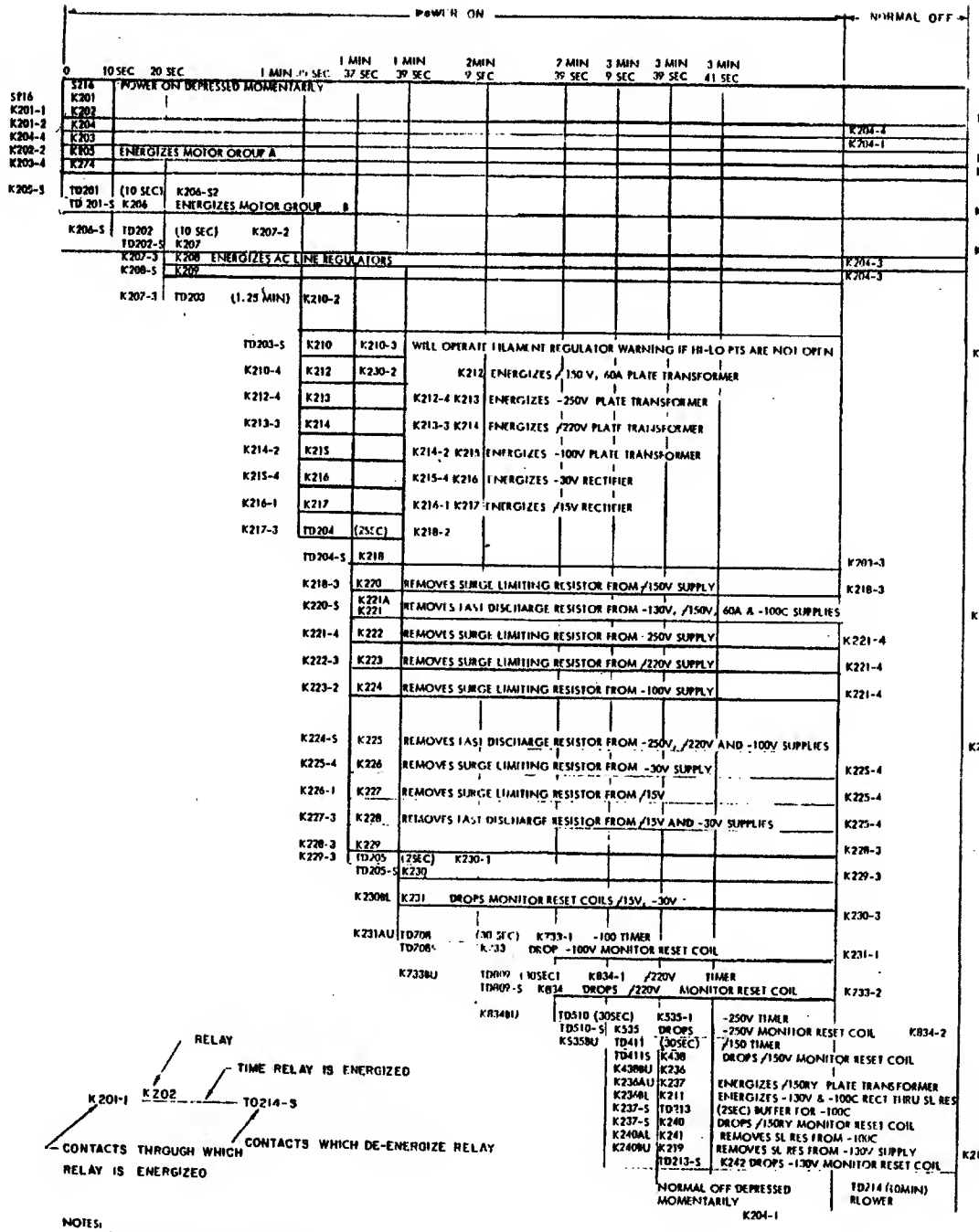

NOTES:

1- DEPRESSION OF DC OFF DROPS K203 MOTOR GROUPS A AND B AND AC LINE REGULATORS REMAIN ENERGIZED

2- DEPRESSION OF DC ON PICKS UP K203 TO RESTORE THE DC VOLTAGES AFTER A DC OFF

3- DEPRESSION OF MASTER POWER OFF DE-ENERGIZES K202 TO DROP ALL AC AND DC VOLTAGES IMMEDIATELY

LOCATION OF COMPONENTS ON MACHINE AND DRAWING 902 SHTS 1,2,3 & 4

9.02
SHEET 6 OF 7

RELAYS AND CONTACTORS

		DRAWING LOCATION					
		COIL	AU OR1	BU OR2	BL OR3	AL OR4	S	MACHINE LOCATION
	K201	1A	1B	1B	4A			PDF-41C
	K202	2A	1B	3B				PDF-31C
	K203	4A	4A	3B	6B	16B		PDF-31C
	K204	3A	2B	2B	3B	4B		PDF-11C
	K205	2A					3B	PDF-21C
	K206	3A					31-3B, 32-3B	PDF-21C
	K207	3A	3B	3A	3B	6B		PDF-21C
	K208	3A					31-2B, 32-3A	PDF-12C
	K209	8A	6B					PDF-11C
	K210	3A	8B	3B	3A	5B		PDF-21C
	K211	3A						PDF-41C
	K212	3A				3B		PDF-31C
	K213	3A			3B			PDF-31C
CONTR	K214	3A		6B				PDF-11C
	K215	6A				6B		PDF-41C
	K216	6A	6B					PDF-41C
	K217	6A			8B			PDF-11C
	K218	6A	6A	8B	6B			PDF-21C
	K219	6A						PDF-41C
	K220	6A					7A	PDF-11C
	K221	7A				7B		PDF-21C
	K222	7A			7A			PDF-41C
	K223	7A		7A				PDF-11C
	K224	7A					7B	PDF-41C
	K225	7A				6B		PDF-31C
	K226	7A	6A					PDF-41C
	K227	6A			8B			PDF-11C
	K228	8A			8B			PDF-11C
	K229	8A	9B	9B	8B			PDF-21C
	K230	8A	8B	5B	9B	14B		PDF-13A
RELAY	K231	9A	9B	13B	13B	13B		PDF-13A
	K236	10A	6B		5B			PDF-23A
CONTR	K237	6A					11B	PDF-41C
RELAY	K240	11A	13B	6B		12B		PDF-23A
CONTR	K241	11A	10B	11B				PDF-21C
	K242	12A	12B	11B	14B	5A		PDF-23A
	K243	13B		13A				PDF-13A
	K244	14	1B					PDF-23A
	K245	14	1B					PDF-23A
	K246	5A			1B			PDF-23A
	K247	16B	4B	15B				PDF-13A
	K274	16B	16B	5B				PDF-33A
	K275	16B	4B	13B				PDF-13A
	K276	13B			1B			PDF-13A
	K298	10A	11B	11B		14B		PFI-43C
	K299	10A	10B	11B		14B		PF2-21C
	K232	4A	9.23	4B				PDF-31A
	K233	9A	9B	10B		14B		PF2-23C
	K234	10A	10B	10B		14B		PFI-41C
	K1201	3.11.02				3B		PFI-21C
	K1221	3.12.02				3B		PFI-21C
	K3301	15.02				3B		PFI-23C
	K2046	9.20			1B	9.23		PDF-13A
	K2049	9.20			1B	9.23		PDF-13A
	K2050	9.20			1B	9.23		PDF-13A
RELAY	K2051	9.20			1B	9.23		PDF-12A
	K2052	9.20			1B	9.23		PDF-23A
	K2053	9.20			1B	9.23		PDF-23A
	K2054	9.20			1B	9.23		PDF-23A
	K2055	9.20			1B	9.23		PDF-23A
	K2056	9.20			1B	9.23		PDF-23A
	K2057	9.20			1B	9.23		PDF-23A
	K2058	9.20			1B	9.23		PDF-23A
	K2059	9.20			1B	9.23		PDF-33A
	K2060	9.20			1B	9.23		PDF-33A
	K2061	9.20			1B	9.23		PDF-33A
	K2062	9.20			1B	9.23		PFI-24C
	K2063	9.20			1B	9.23		PFI-24C
	K2064	9.20			1B	9.23		PFI-24C
	K2065	9.20			1B	9.23		PFI-34C
	K2066	9.20			1B	9.23		PFI-34C
	K2067	9.20			1B	9.23		PFI-34C
	K2068	9.20			1B	9.23		PF2-24C
	K2069	9.20			1B	9.23		PF2-24C
	K2070	9.20			1B	9.23		PF2-24C
	K2071	9.20			1B	9.23		PF2-34C
	K2072	9.20			1B	9.23		PF2-34C
	K2073	9.20			1B	9.23		PF2-34C

TERMINAL BOARDS

TERMINAL BOARD	DRAWING LOCATION 1	2	3	4	5	6	7	8	9	10	11	12	13	OTHERS	MACHINE LOCATION
TB113	1B	1B													PFI-44C
TB116							4B	4B	1B	1B					PFI-44C
TB117	14B	11B	10B	14A	10B	12A									PFI-34C
TB118	11B	11B	11B	14A	11B	12A									PFI-34C
TB120	3B	3B													PFI-24C
TB135	1B	1B													PF2-44C
TB136	4B	4B	1B	1B	14B	10B	3B	14A	10B	2A					PF2-44C
TB137					10B	11B	10B	14A	11B	2A					PF2-34C
TB142	1B	1B		9B	4B	4B	1A	1B	10B	10B	14A	10B	2A		PDF-12B
TB143	11B	14A	11B									3B	3B		1-3: PDF-12B, 12-13: PDF-22B
TB144	1B	1B	9B		4B	4B	1A	1B	10B	9B	14A	10B	2A		PDF-22B
TB145	10B	14A	1B	1B											1-4. PDF-22B, 5-6: PDF-32B
TB153														U UNREG. A.C. BUS 1A, 3A	PDF-12B
TB156							1B	1B						AC. NEUT BUS 1B, 3A	PDF-32B
TB160				4B	4A	4A									PDF-31A
TB161	15B	15B	3A	3A											PDF-11A
TB1601	13A	13A													PDF-11A
TB1602	13A	13A													PDF-11A
TB1603	14A	14A													PDF-21A
TB1604	14A	14A													PDF-21A
TB1605	14A	14A													PDF-31A
TB1606	13A	13A													PDF-31A
TB1607	13A	16A													PDF-31A
TB1608	14A	14A													PDF-11A
TB1609	13A	13A													PDF-11A
TB1614	13A	13A													PDF-31A
TB1615	15B	4A	4A												PDF-31A
TB1616	5A	5A			5A	5A	2A	2A			2A	2A			PDF-31A
TB1617	12A	11A	10A	10A	9A	9A									PDF-21A
TB2002	15A		15A	15A											PDF-11A
TB2003	15A		15A	15A											PDF-21A
TB2004	15A		15A	15A											PDF-21A
TB2005	16A		15A	15A											PDF-21A
TB2006	16A		16A	16A											PDF-31A
TB2007				5B											PDF-31A
TB2009	16A		16A	16A											PDF-11A
TB2011	14A	14													PDF-31A
TB2015	1A	1A	15B												PDF-31A
TB2115	4A	13B	1A												PDF-21A

MISCELLANEOUS

ITEM	DRAWING LOCATION	MACHINE LOCATION
TRANSFORMER T201	1B	PDF-22C
FUSE F30	1A	PDF-11B
FUSE F110	2A	PDF-11B
FILAMENT ALARM BUZZER	3A	PDF-12C
CB 210 B3	1B	PDF-32A
ALARM GONG	1B	PDF-32B
FUSE TO	1A	PDF-11B
CUST. ENG. TEST PNL	2B	MAIN FR.

MANUAL SWITCHES

SWITCH	FUNCTION	DWG LOCATION A	B	MACHINE LOCATION
S201	MASTER POWER OFF PFI	1B	1B	PFI-52A
S203	DC OFF PFI	4B		PFI-52A
S204	MONITOR SWITCH	16A	15B	PDF-11A
S205	MONITOR SWITCH	15A	14B	PDF-11A
S206	MONITOR SWITCH	15A	14B	PDF-11A
S207	MONITOR SWITCH	15A	14B	PDF-11A
S208	MONITOR SWITCH	15A	13B	PDF-11A
S209	MONITOR SWITCH	15A	13B	PDF-11A
S210	MONITOR SWITCH	16A	15B	PDF-11A
S211	MONITOR SWITCH	16A	14B	PDF-11A
S212	MONITOR SWITCH	16A	14B	PDF-11A
S213	MONITOR SWITCH	16A	15B	PDF-11A
S214	MONITOR SWITCH	16A	13B	PDF-11A
S215	MONITOR SWITCH	16A	14B	PDF-11A
S216	POWER ON PS	1B		PDF-31A
S218	DC ON PS	4A		PDF-31A
S220	MASTER POWER OFF	2B		PDF-31A
S221	MASTER POWER OFF PF2	2B	2B	PF2-12A
S223	D.C. OF PF2	4B		PF2-12A
S224	-100 FUSE NEON	10B	15B	PDF-11A
S225	-250 FUSE NEON	11B	15B	PDF-31A
S226	FIL. & ALARM INTLK	4A		PDF-31A
	NORMAL OFF MF	2A		MAIN FR
	POWER ON MF	1B		MAIN FR
	D.C. OFF MF	4B		MAIN FR.
	D.C. ON MF	4B		MAIN FR.

SIGNAL LIGHTS

NEONS	DRAWING LOCATION	MACHINE LOCATION
PS OPEN FUSE	1A	PDF-21A
OPEN FUSE PFI	1A	PDF-23A
OPEN FUSE PF2	1A	PDF-13A
FIL. REG. WARNING	4A	PDF-2.A
VOLTAGE OFF LIMIT	15B	PDF 21A
+15, -30	9A	PDF-21A
-100	9A	PDF-21A
+220	10A	PDF-21A
-250	10A	PDF-21A
+150 RY-130, +150	11A	PDF-21A
-100 C	12A	PDF-2.A

LAMPS	DRAWING LOCATION	MACHINE LOCATION
NORMAL OFF	2A	PDF-21A
POWER ON	2A	PDF-21A
D.C. OFF	5B	PDF-31A
D.C. ON	5B	PDF-31A
FIL. REG. WARNING (AUX)	4A	PDF-31A

TERMINAL POINTS

TERMINAL	DRAWING LOCATION	MACHINE LOCATION
T22-10	2B	PDF-33C
T22-11	2B	PDF-33C
T22-12	2A	PDF-33C
T22-13	2A	PDF-33C
T22-14	4A	PDF-33C
T23-1	4B	PDF-33C
T23-2	4B	PDF-33C
T23-3	1B	PDF-33C
T23-4	5A	PDF-33C
T23-5	10B	PDF-33C
T23-6	10B	PDF-33C
T23-11	11B	PDF-33C
T23-12	11B	PDF-33C
T23-13	1B	PDF-33C
T23-14	1B	PDF-33C
T34-3	4B	PDF-13C
510-10	4B	PDF-32C

RESISTORS

RESISTOR	DRAWING LOCATION	MACHINE LOCATION
R219	1A	PDF-31A
R220	2A	PDF-31A
R221	2A	PDF-31A
R222	4A	PDF-31A
R223	5A	PDF-31A
R224	5A	PDF-31A
R225	9A	PDF-21A
R226	9A	PDF-21A
R227	10A	PDF-21A
R228	10A	PDF-21A
R229	11A	PDF-21A
R230	12A	PDF-21A
R231	15B	PDF-31A

MONITORS

MONITOR	DWG LOCATION RESET COIL	POINT	MACHINE LOCATION
+15	13A	15A	PDF-11A
-30	13A	15A	PDF-11A
-100	14A	15A	PDF-21A
+150	14A	16A	PDF-11A
+220	14A	15A	PDF-21A
-250	14A	15A	PDF-31A
-130	13A	16A	PDF-31A
+150 RY	13A	16A	PDF-11A
+15 FUSE SENSE	13A	15B	PDF-11A
-100 FUSE SENSE	13A	16B	PDF-31A
-250 FUSE SENSE	13A	16B	PDF-31A

PLUGS

JONES PLUG	DRAWING LOCATION 13	14	15	16	17	18	19	20	21	MACHINE LOCATION
JP421			1B	10A		14B	13B	11B	1B	PFI-33C
JP521	10B			10A		14B	14B	2B	10B	PF2-21C
JP721		3B	3A			14B	14B	10B	10B	PF2-23C
JP821	10B		9A			14B	14B	10B	10B	PFI-31C
JP1101		3B	3B							PFI-21C
JP1201		3B	3B							PFI-21C
JP1301		3B	3B							PFI-22C

TIMERS

TIMER	DRAWING LOCATION TIMER	SWITCH-S	MACHINE LOCATION
TD-201	3A	3B	PDF-12A
TD-202	3A	3B	PDF-12A
TD-203	3A	3B	PDF-22A
TD-204	8A	6A	PDF-22A
TD-205	8A	8B	PDF-22A
TD-213	11A	12B	PDF-32A
TD-214	2A	2B	PDF-32A
TD-411	10A	11B	PFI-43C
TD-510	10A	10B	PF2-33C
TD-708	9A	9B	PF2-23C
TD-809	9A	10B	PFI-43C

RELAY AND CONTACTOR POINT DESIGNATIONS

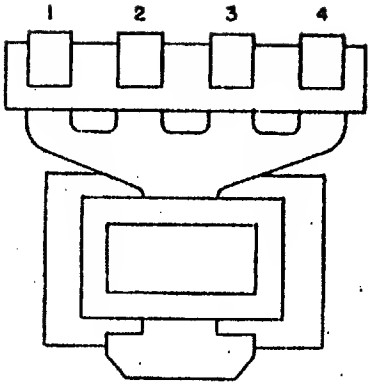

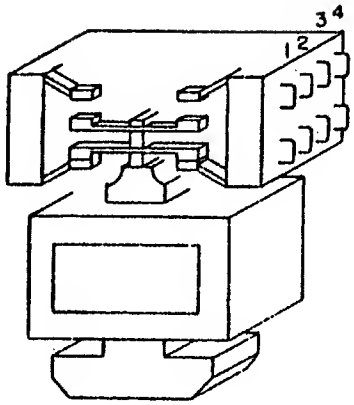

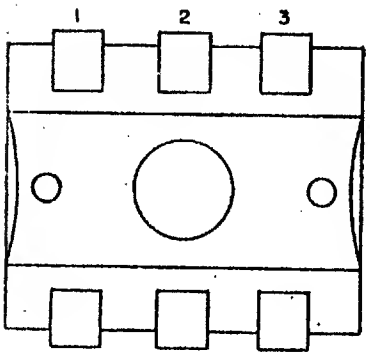

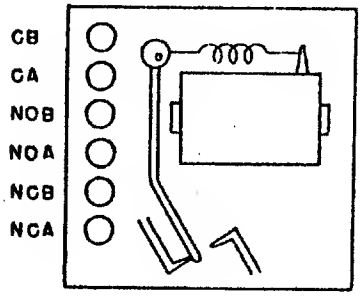

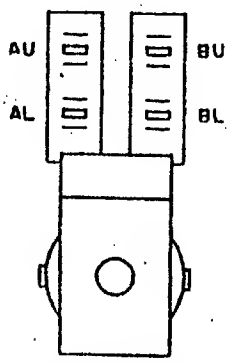

CONTACT END

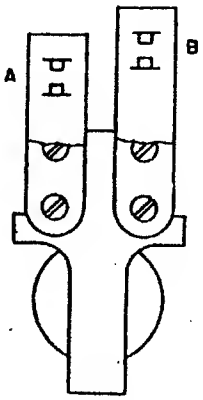

CONTACT END

512702 EC 241159

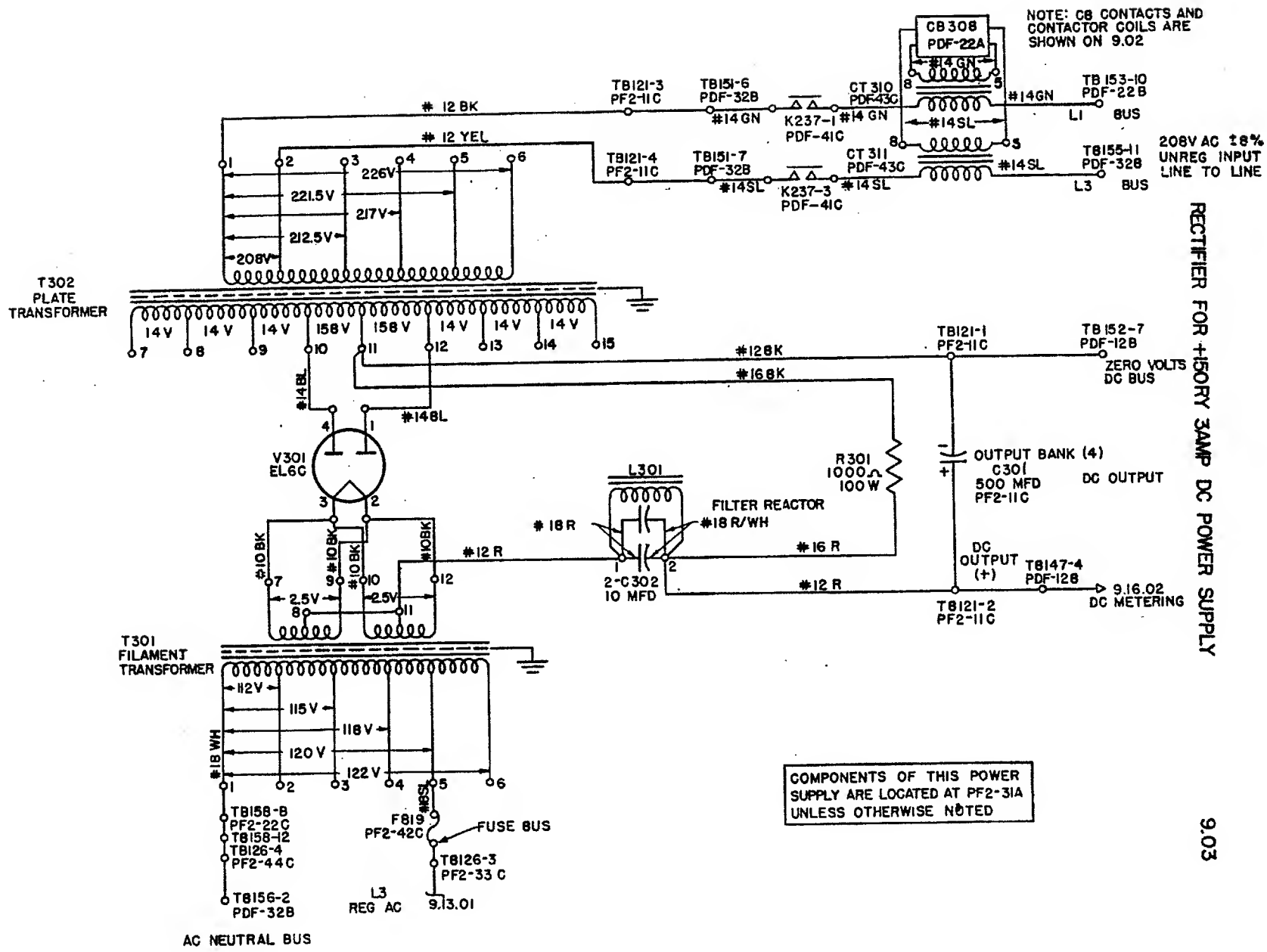

RECTIFIER FOR +15ORY 3AMP DC POWER SUPPLY

9.03

338804 Fig. 242496

RECTIFIER FOR +150 VDC 60 AMP POWER SUPPLY

9.04.01

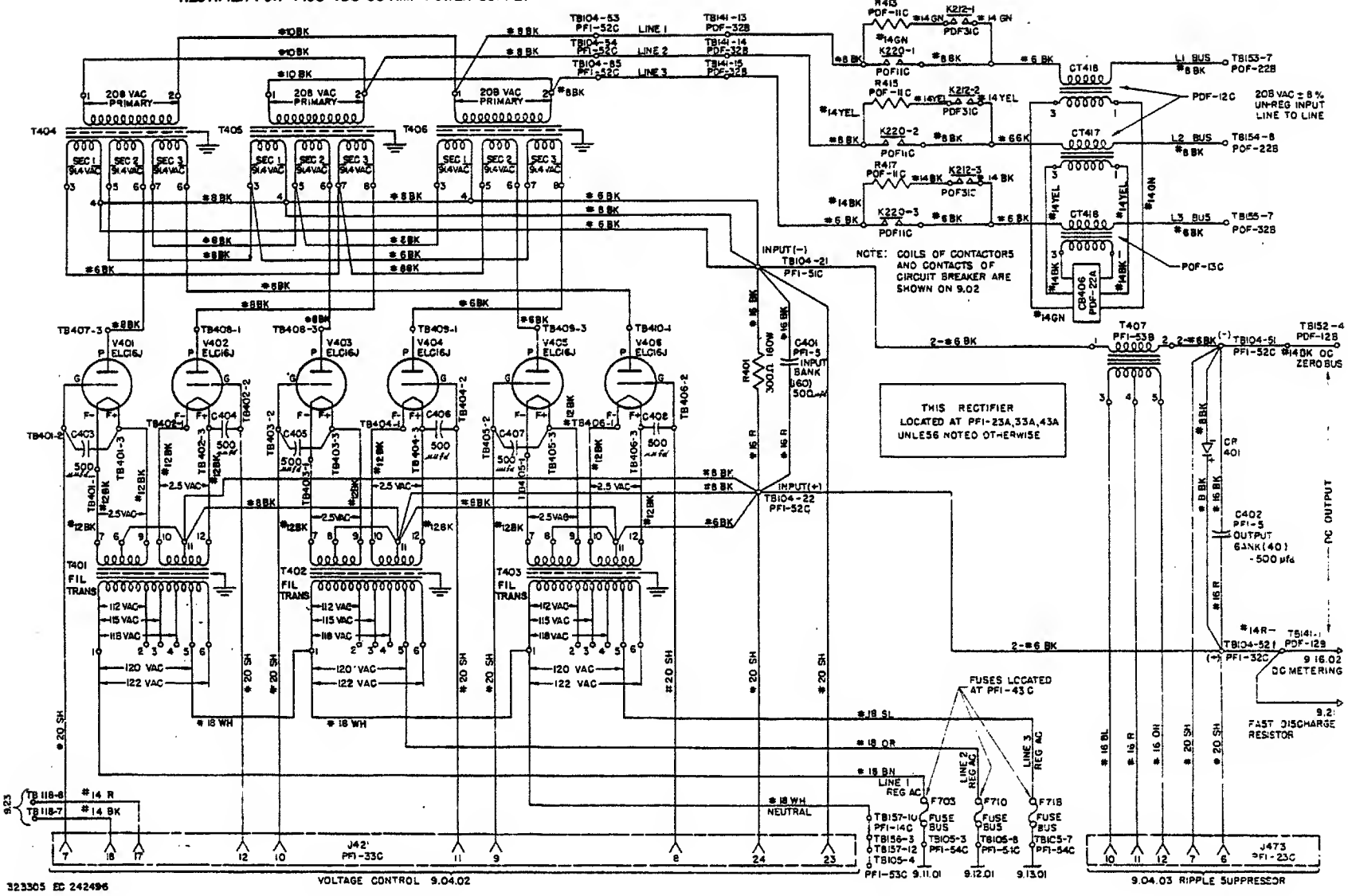

323305 EC 242496

VOLTAGE CONTROL CIRCUITS FOR +150V & -100V DC POWER SUPPLIES

9.07.02

9.04.02

SHEET 1 OF 3

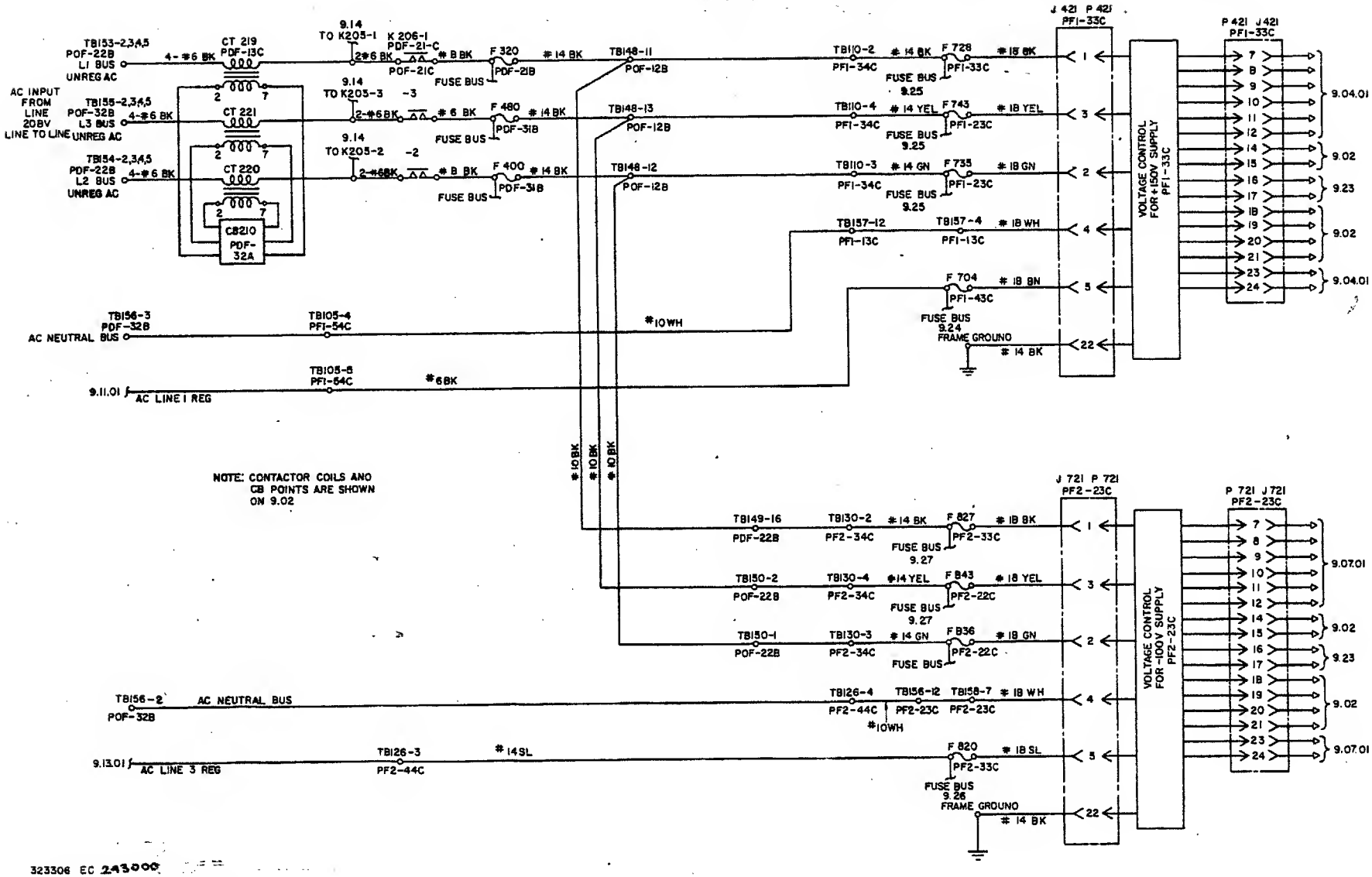

323306 EC 243000

VOLTAGE CONTROL FOR -100, +150 (60A) DC POWER SUPPLIES

NOTE: -100 V AND +150 V VOLTAGE CONTROL CHASSIS ARE INTERCHANGEABLE
PLUGGABLE UNITS IDENTIFIED BY THE SAME NUMBER ARE INTERCHANGEABLE

9.07 02
9.04.02
SHEET 2 OF 3

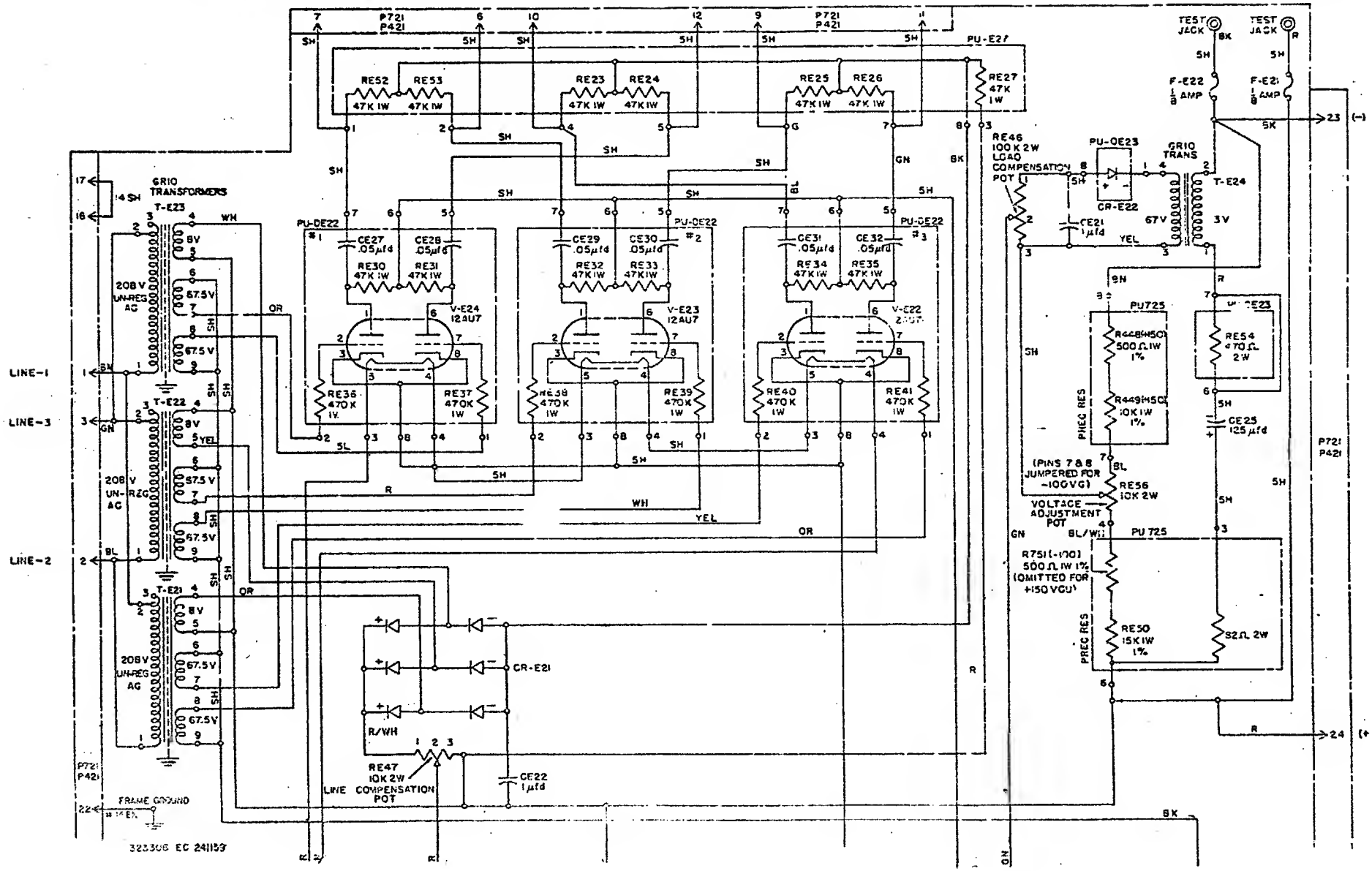

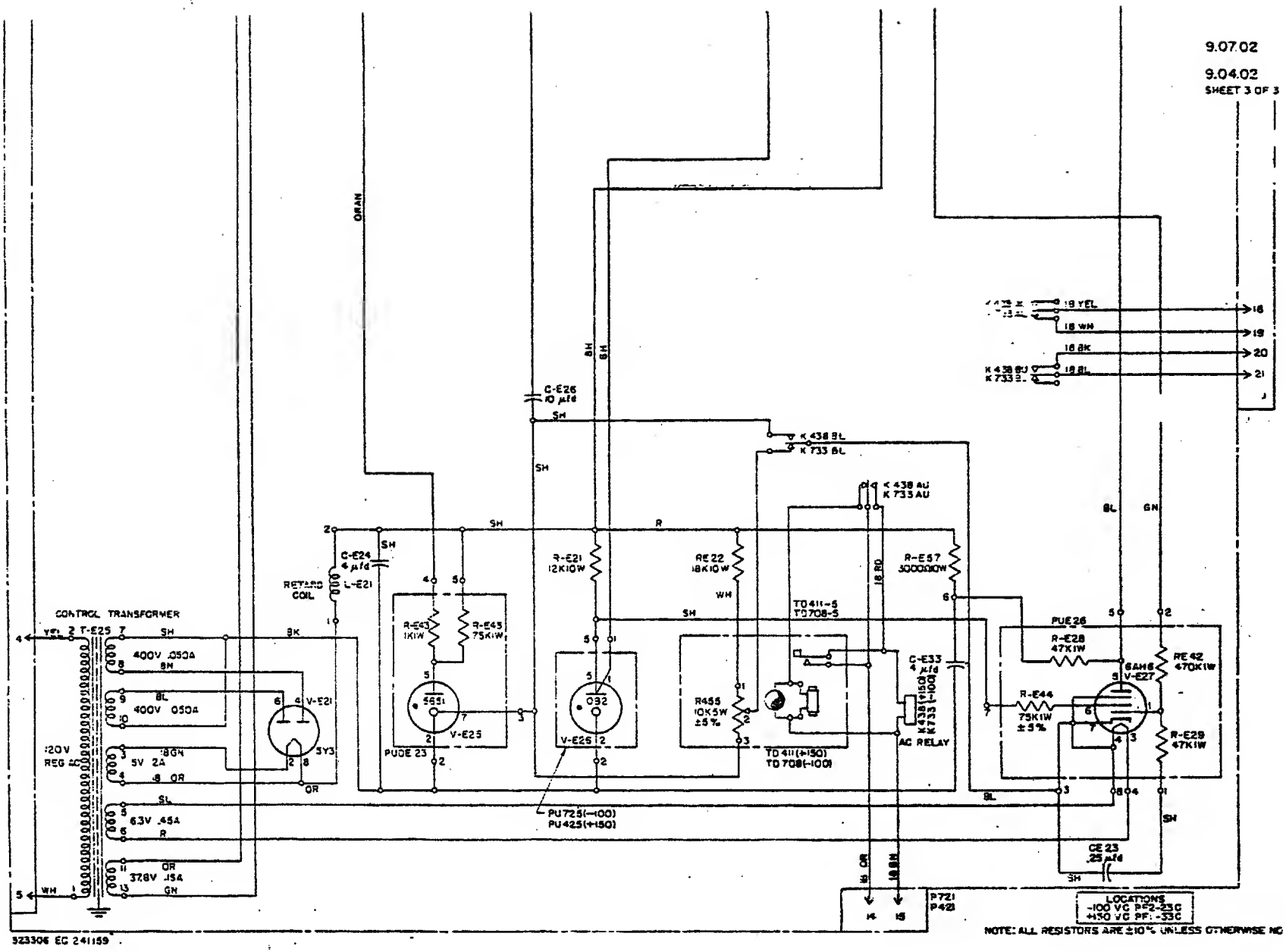
9.07.02
9.04.02
SHEET 3 OF 3
CONTROL TRANSFORMER
T-E25
400V .050A
400V .050A
5V 2A
6.3V .454
37.6V .154
120V
REG AC
V-E21
5Y3
RETARD COIL
L-E21
C-E24 4 µfd
C-E26 10 µfd
R-E43 1K1W
R-E45 75K1W
5651
V-E25
PUDE 23
R-E21 12K10W
032
V-E26
PU72S(-100)
PU42S(+150)
RE22 18K10W
R455 10K5W ±5%
TD411-5
TD708-5
TD411(+150)
TD708(-100)
K 438 BL
K 733 BL
K 438 AU
K 733 AU
C-E33 4 µfd
AC RELAY
R-E57 300000W
PUE26
R-E28 47K1W
6AH6 V-E27
RE42 470K1W
R-E44 75K1W ±5%
R-E29 47K1W
CE23 .25 µfd
P721
P421
LOCATIONS
-100 VC PF2-23C
+150 VC PF: -33C
NOTE: ALL RESISTORS ARE ±10% UNLESS OTHERWISE NO
323306 EC 241159

RIPPLE SUPPRESSOR FOR +150V 60 AMP DC POWER SUPPLY

9.04.03

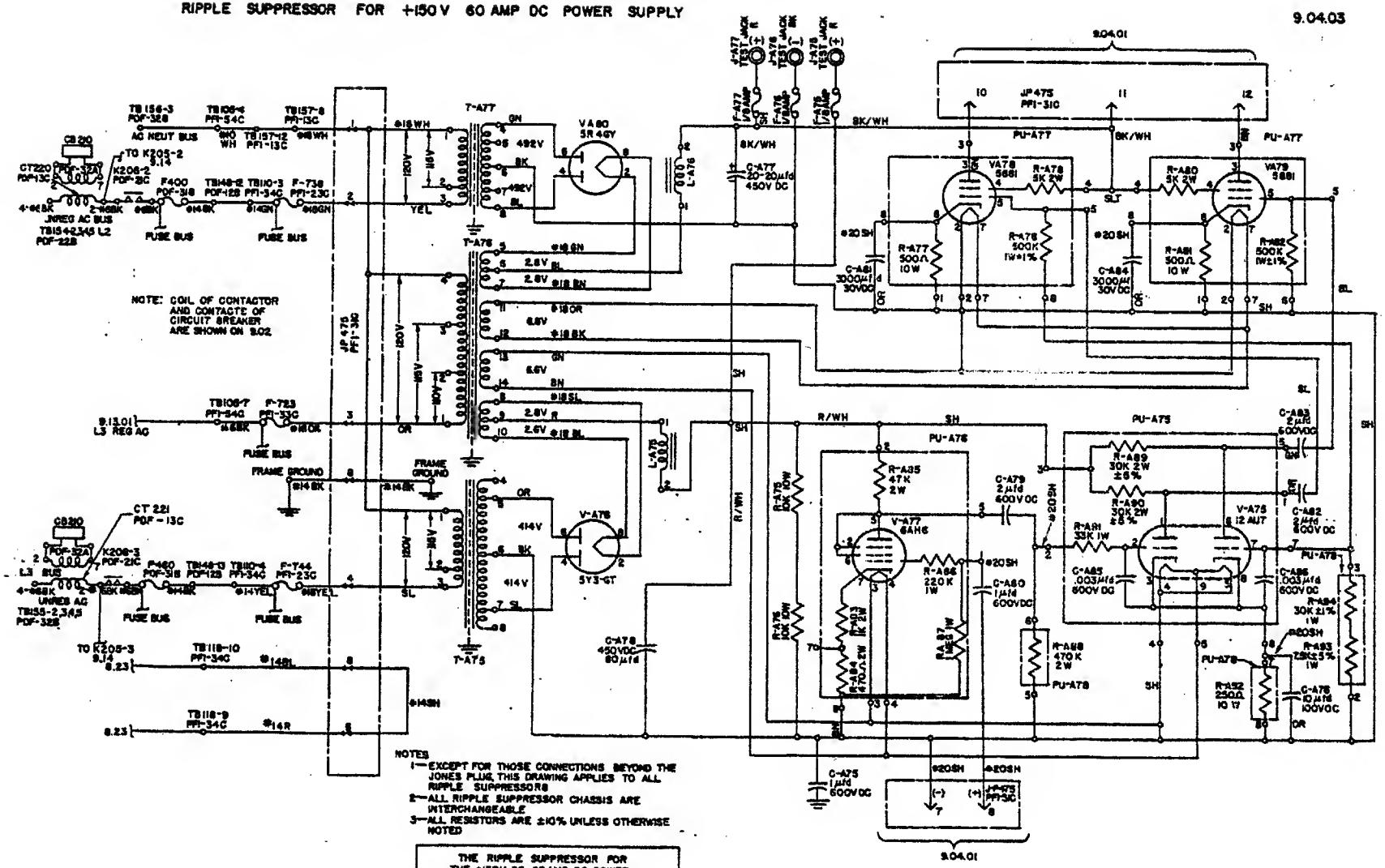

NOTES

1—EXCEPT FOR THOSE CONNECTIONS BEYOND THE JONES PLUG, THIS DRAWING APPLIES TO ALL RIPPLE SUPPRESSORS

2—ALL RIPPLE SUPPRESSOR CHASSIS ARE INTERCHANGEABLE

3—ALL RESISTORS ARE ±10% UNLESS OTHERWISE NOTED

THE RIPPLE SUPPRESSOR FOR THE +150V DC, 60 AMP DC POWER SUPPLY IS LOCATED AT PFI-23C

4—PLUGGABLE UNITS IDENTIFIED BY THE SAME NUMBER ARE INTERCHANGEABLE.

323307 EC 2/1/59

RECTIFIER FOR −250 V, 10 AMP DC POWER SUPPLY

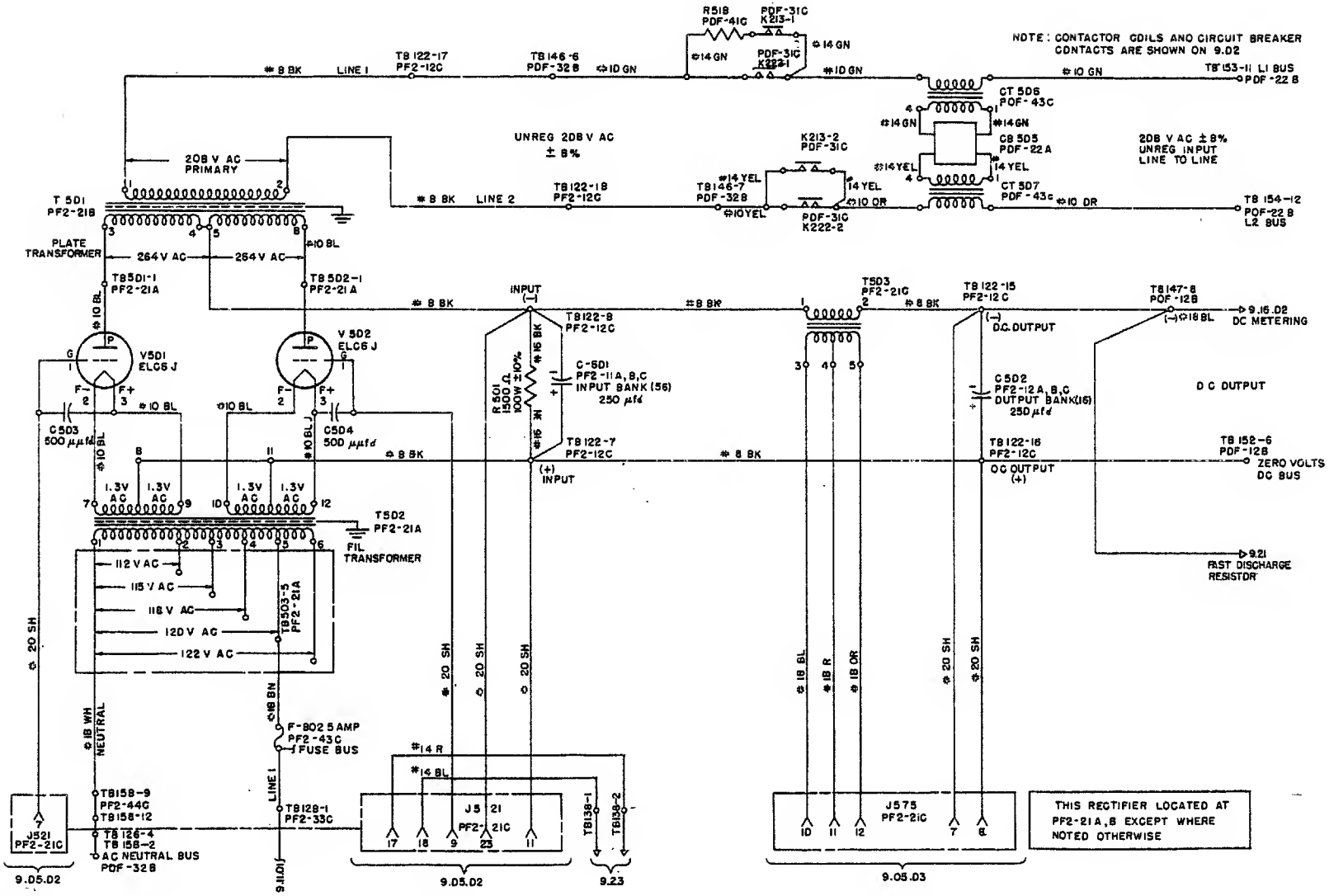

323308 EG 241159

VOLTAGE CONTROLS FOR -250, +220 DC POWER SUPPLIES

9.05.02

9.08.02

SHEET 1 OF 2

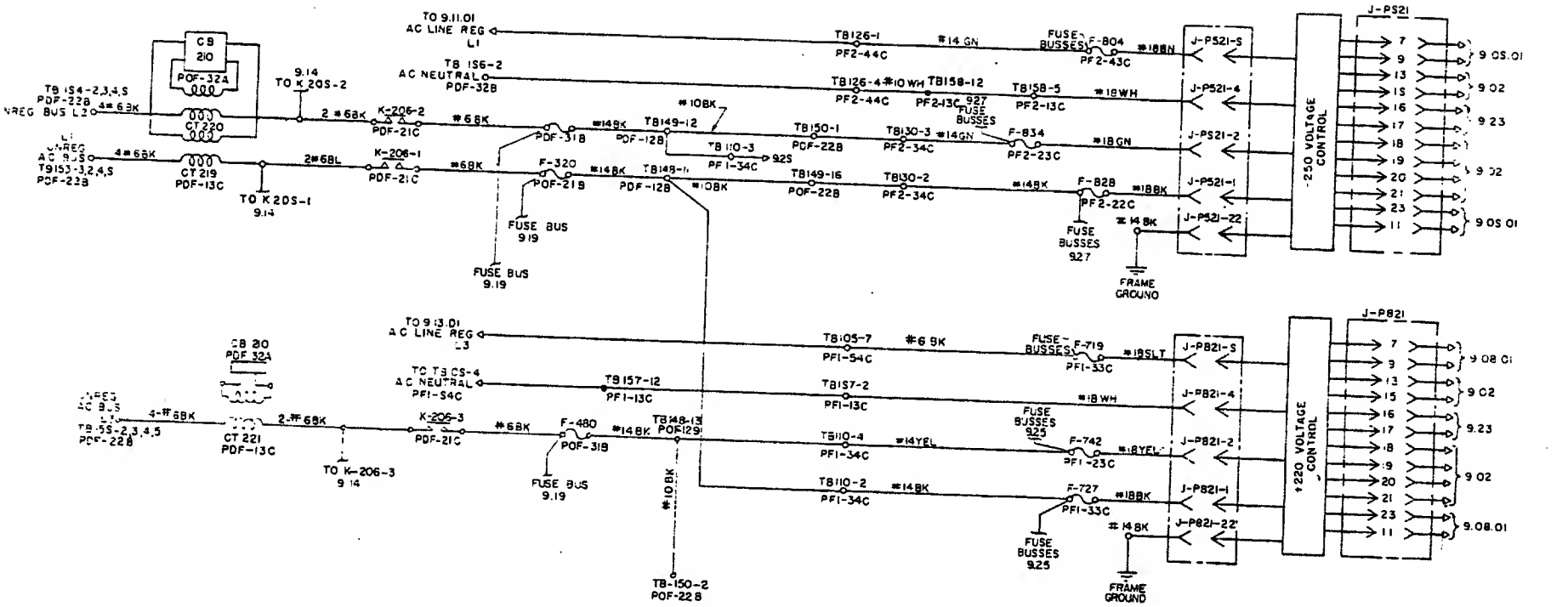

VOLTAGE CONTROL CIRCUIT FOR −250V, +220V DC POWER SUPPLIES

9.05.02

NOTE. −250V, +220V VOLTAGE CONTROL CHASSIS ARE INTERCHANGEABLE. PLUGGABLE UNITS IDENTIFIED BY THE SAME NUMBER ARE INTERCHANGEABLE. ALL RESISTORS ARE ± 10% UNLESS NOTED OTHERWISE. ALL WIRES ARE 20 GAGE UNLESS NOTED OTHERWISE. P821(+220)

9.08.02
SHEET 2 OF 2

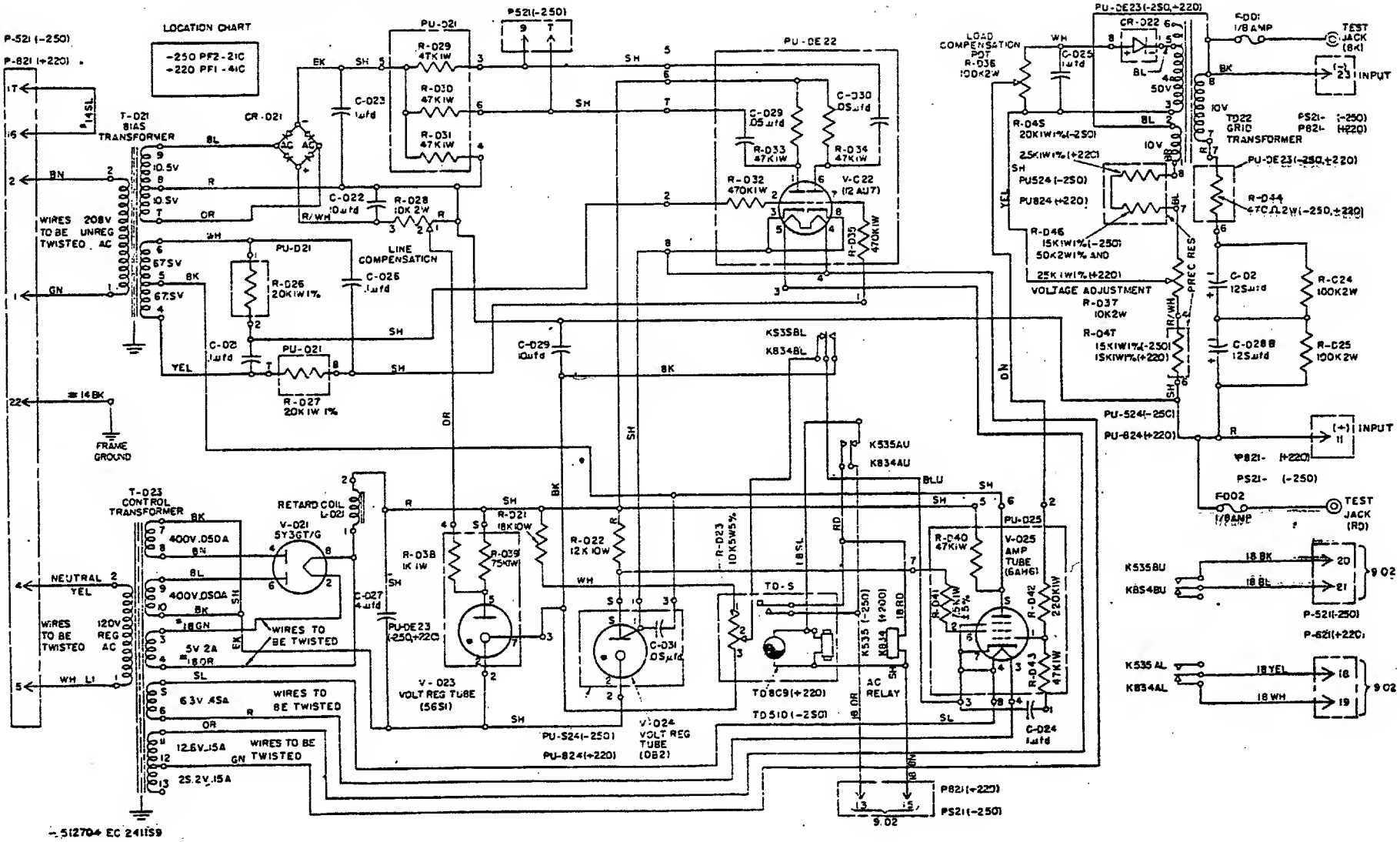

RIPPLE SUPPRESSOR FOR -250V DC POWER SUPPLY

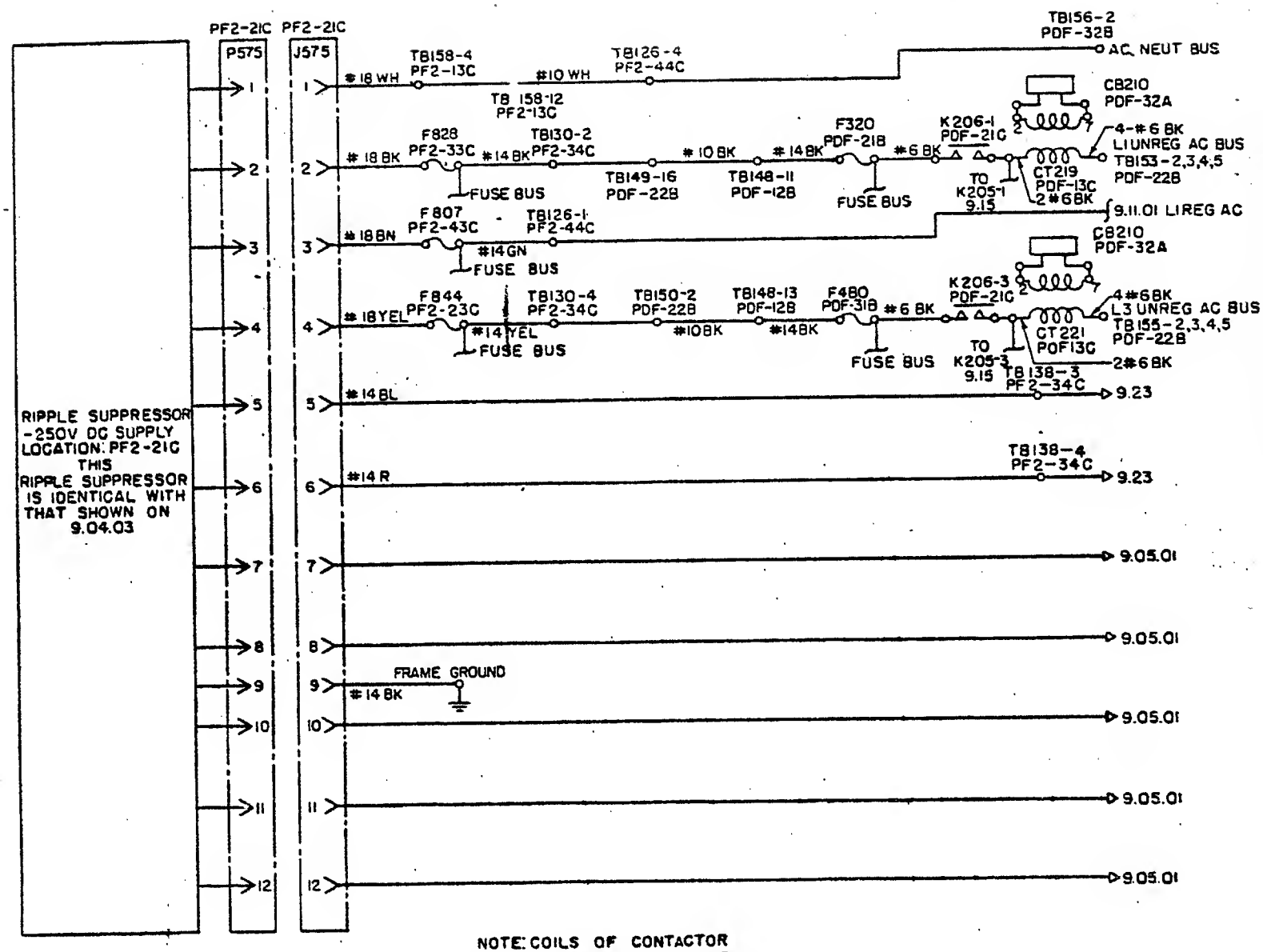

NOTE: COILS OF CONTACTOR AND CONTACTS OF CIRCUIT BREAKER ARE SHOWN ON 9.02

NOTE: ALL RIPPLE SUPPRESSOR CHASSIS ARE INTERCHANGEABLE PLUGGABLE UNITS IDENTIFIED BY THE SAME NUMBER ARE INTERCHANGEABLE

323310 EC 241159

RECT FOR −130 VOLT 3 AMP DC POWER SUPPLY

9.06.01

ALL COMPONENTS IN THIS RECT. LOCATED AT PF2-41A UNLESS OTHERWISE NOTED.

ALL RESISTORS ARE ±10 % UNLESS NOTED OTHERWISE.

NOTE: CONTACTOR COILS AND CIRCUIT BREAKER CONTACTS ARE SHOWN ON 9.02.

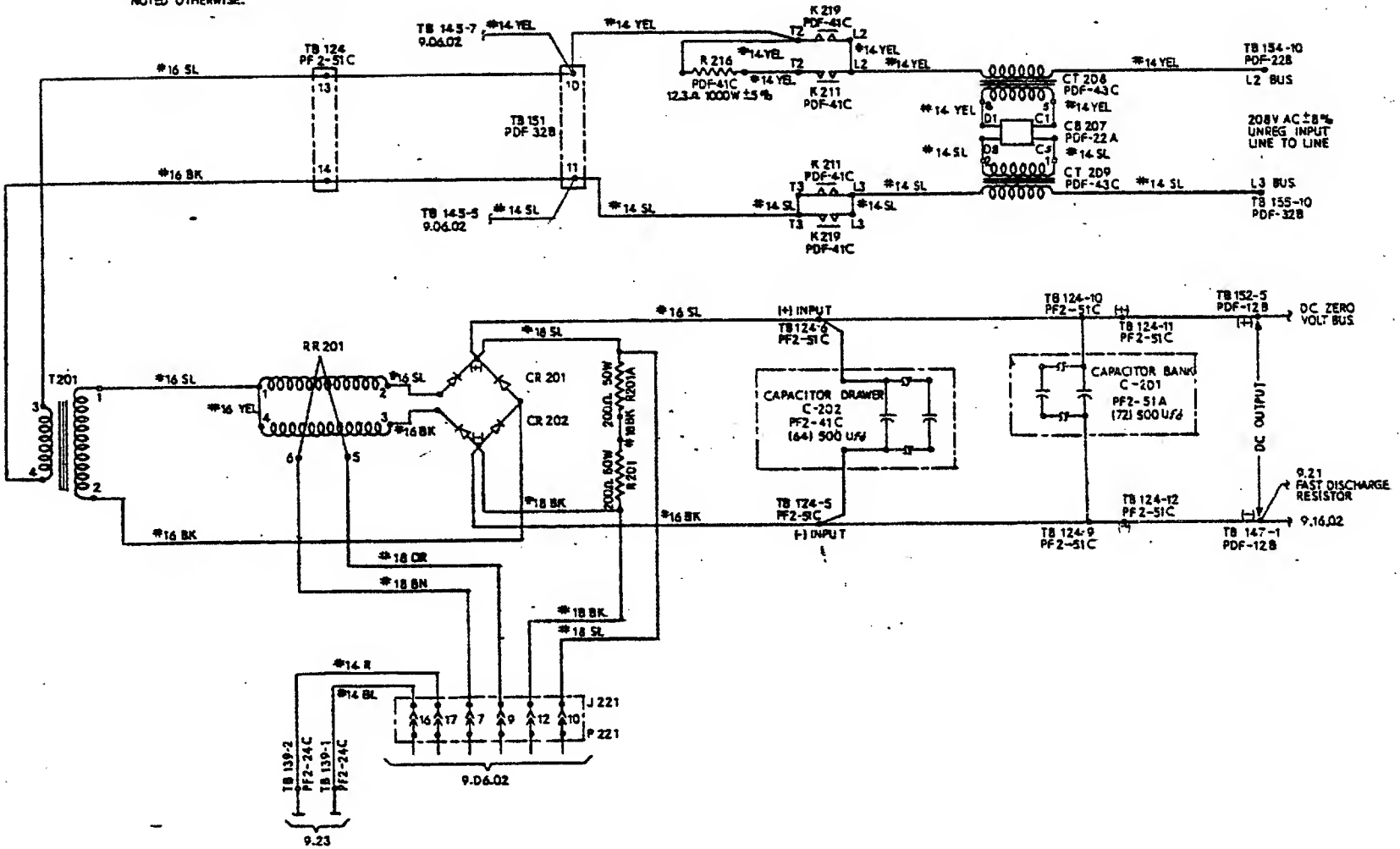

512705 EC 241856

VOLTAGE CONTROL FOR -130 VOLT 3 AMP DC POWER SUPPLY

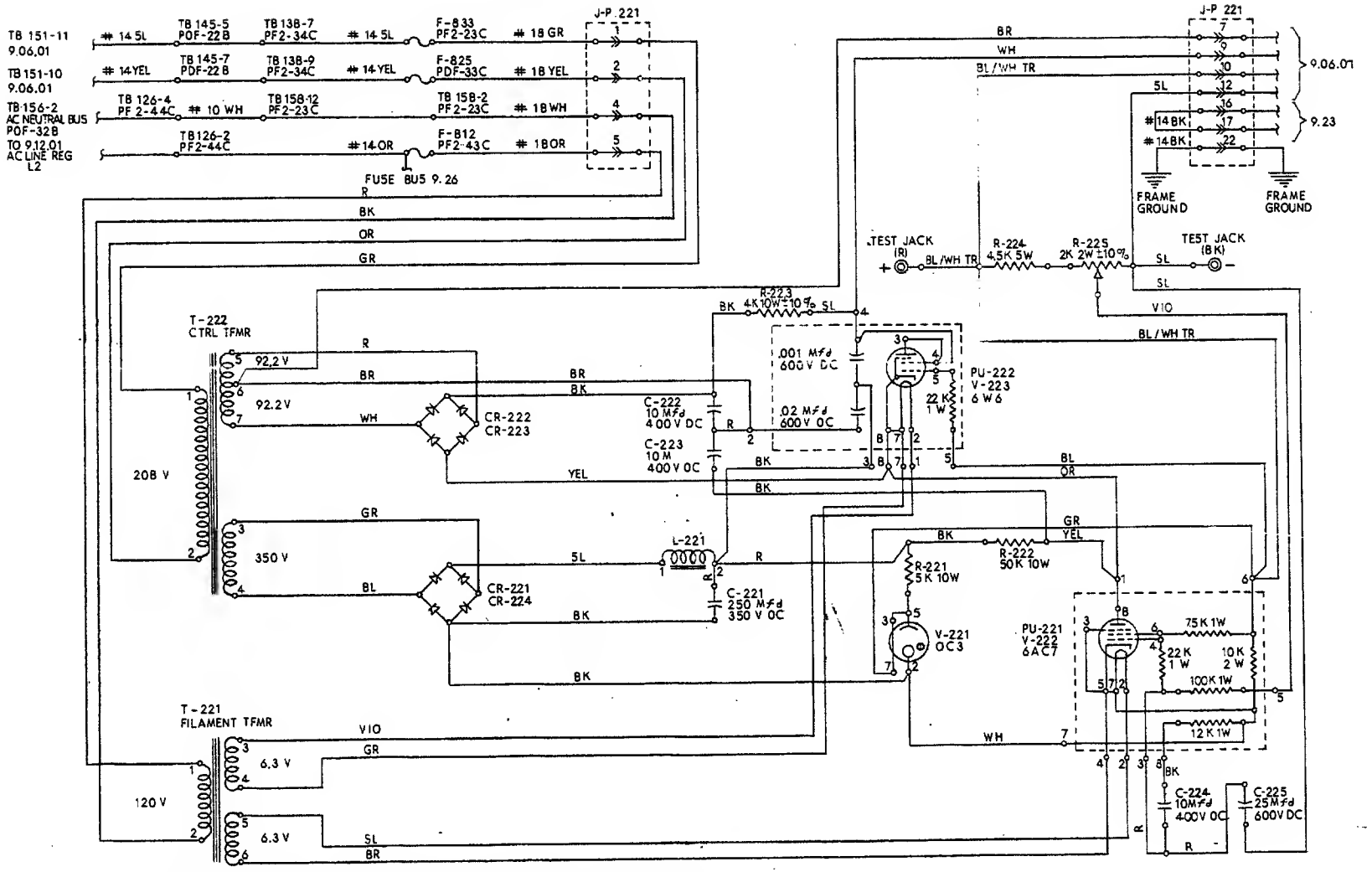

NOTES:

- ALL COMPONENTS IN THIS CHASSIS LOCATED AT PF2-42C UNLESS OTHERWISE NOTED
- ALL WIRES ARE # 20 GAUGE UNLESS OTHERWISE NOTED.
- ALL RESISTORS ARE ± 5% UNLESS OTHERWISE NOTED.

RECTIFIER FOR -100V 60AMP DC POWER SUPPLY

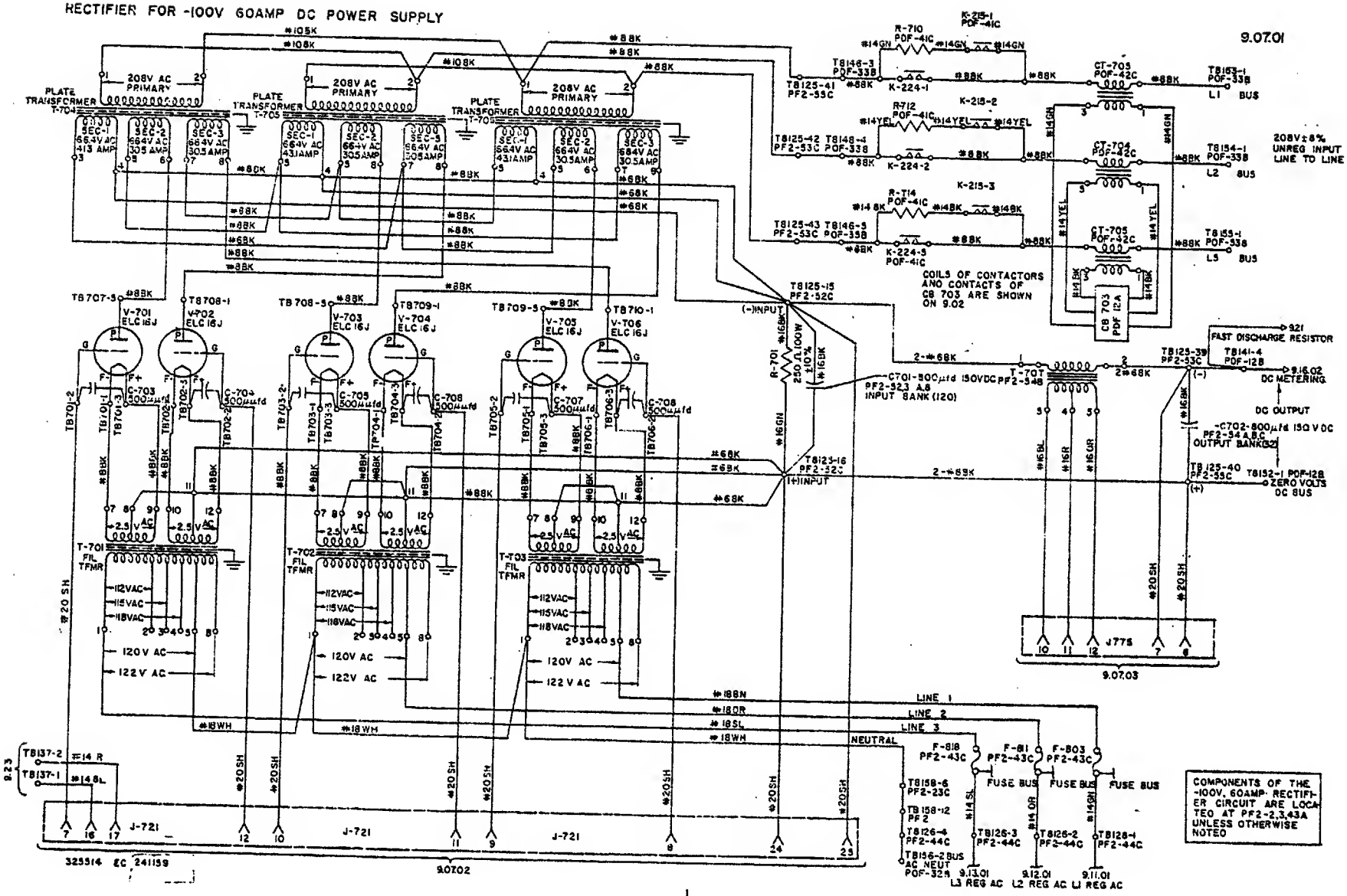

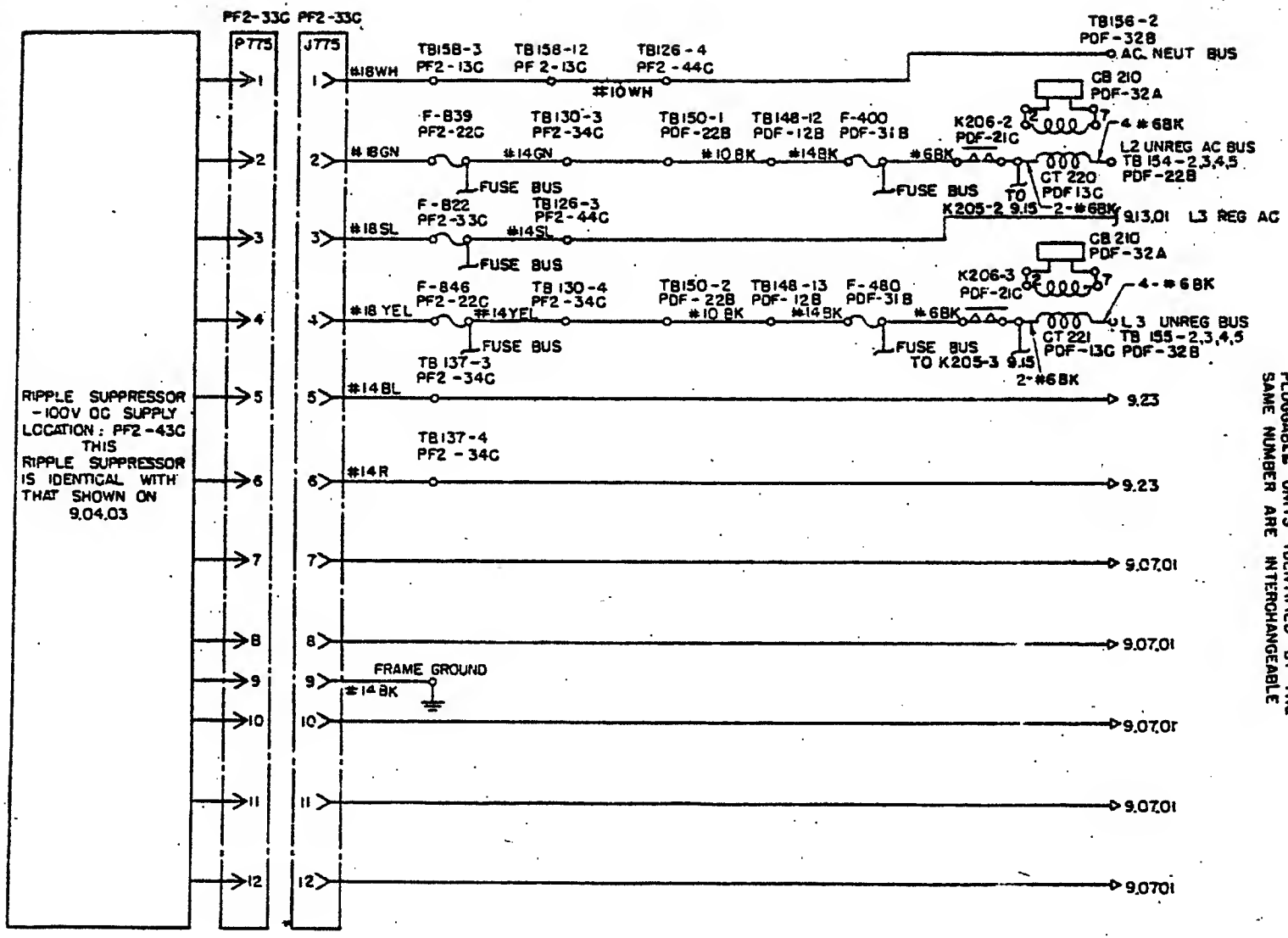

NOTE: ALL RIPPLE SUPPRESSOR CHASSIS ARE INTERCHANGEABLE PLUGGABLE UNITS IDENTIFIED BY THE SAME NUMBER ARE INTERCHANGEABLE

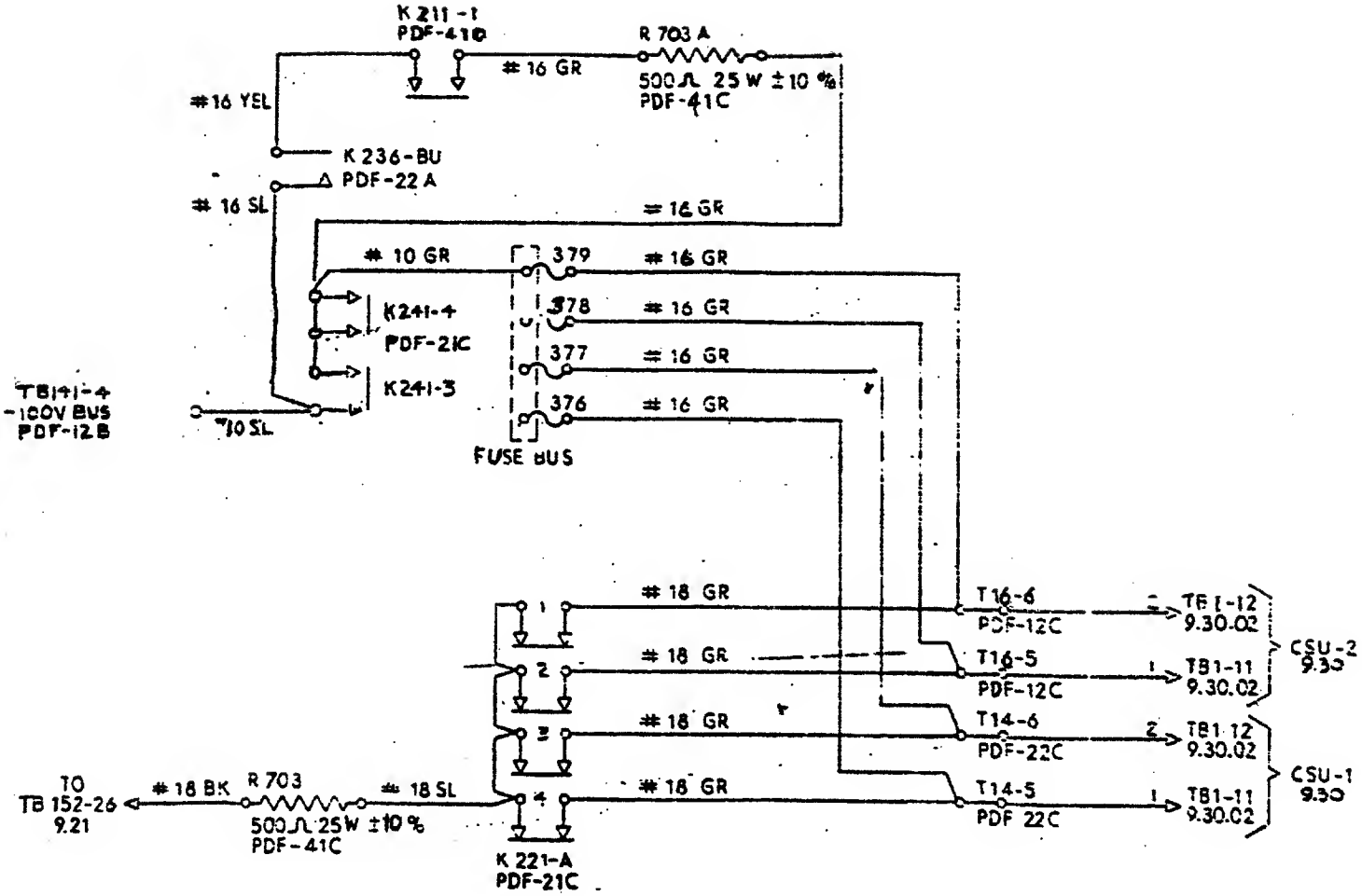
K 211-1
PDF-41C
R 703 A
#16 GR
500Ω 25 W ±10 %
PDF-41C
#16 YEL
K 236-BU
PDF-22 A
#16 SL
#16 GR
#10 GR
379
#16 GR
K241-4
PDF-21C
378
#16 GR
377
#16 GR
K241-3
376
#16 GR
TB141-4
-100V BUS
PDF-12B
#10 SL
FUSE BUS
#18 GR
T16-6
PDF-12C
TB1-12
9.30.02
CSU-2
9.30
#18 GR
T16-5
PDF-12C
TB1-11
9.30.02
#18 GR
T14-6
PDF-22C
TB1-12
9.30.02
CSU-1
9.30
TO
TB 152-26
9.21
#18 BK
R 703
500Ω 25W ±10 %
PDF-41C
#18 SL
#18 GR
T14-5
PDF 22C
TB1-11
9.30.02
K 221-A
PDF-21C

RECTIFIER FOR +220 V 16 AMP DC POWER SUPPLY

9.08.01

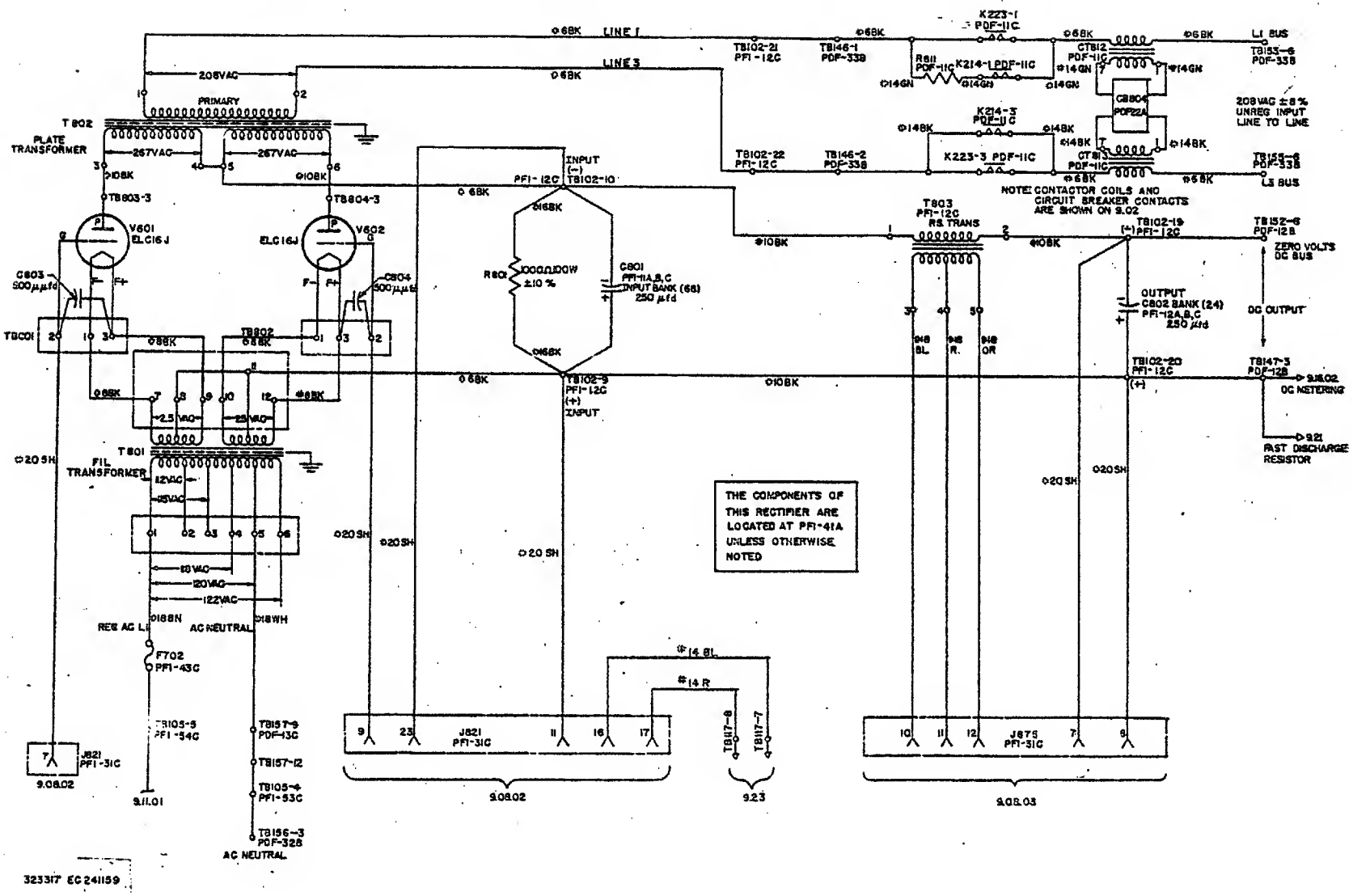

323317 EC241159

RIPPLE SUPPRESSOR FOR +220V DC POWER SUPPLY

NOTE: ALL RIPPLE SUPPRESSOR CHASSIS ARE INTER-CHANGEABLE

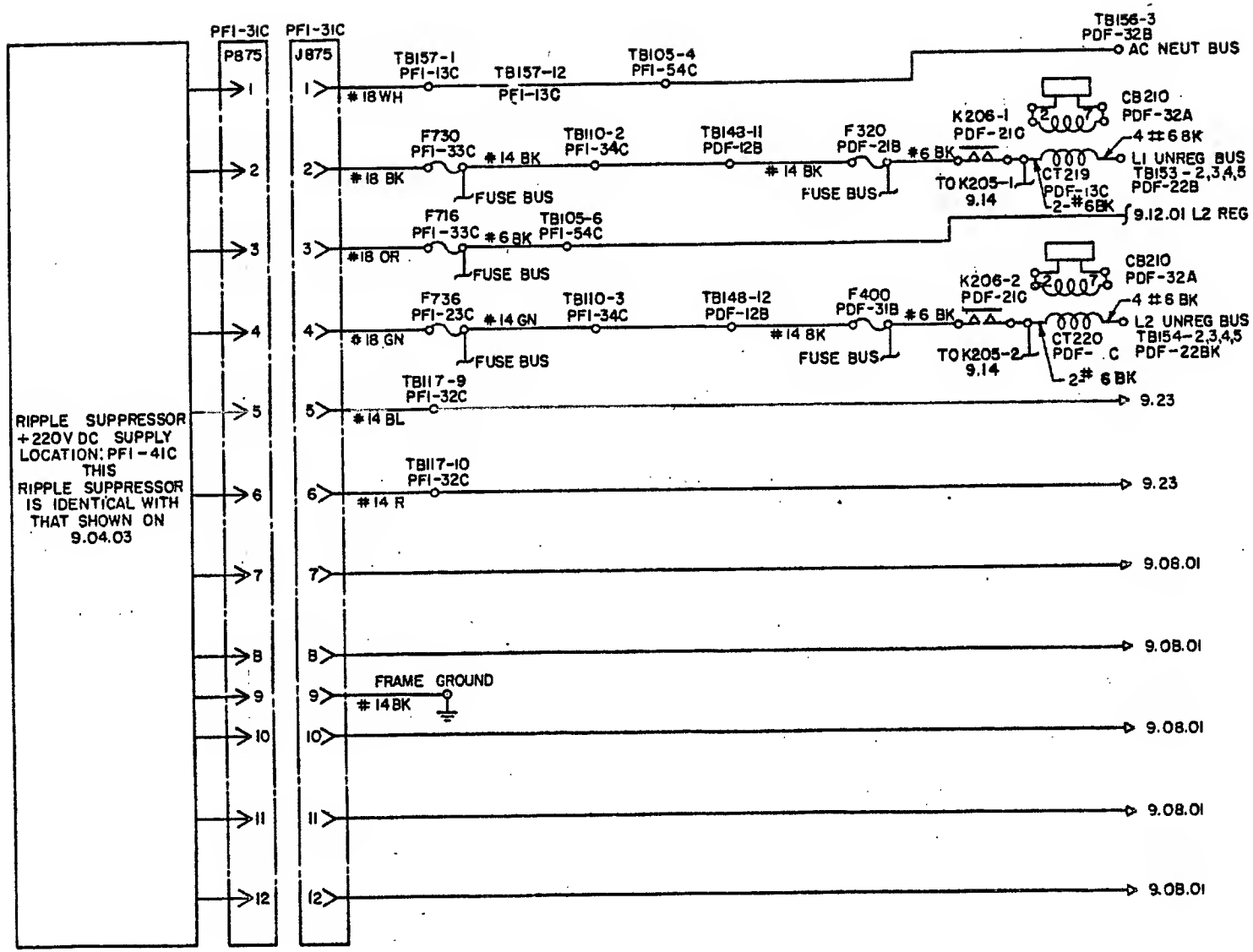

9.08.03

323319 EC-241159

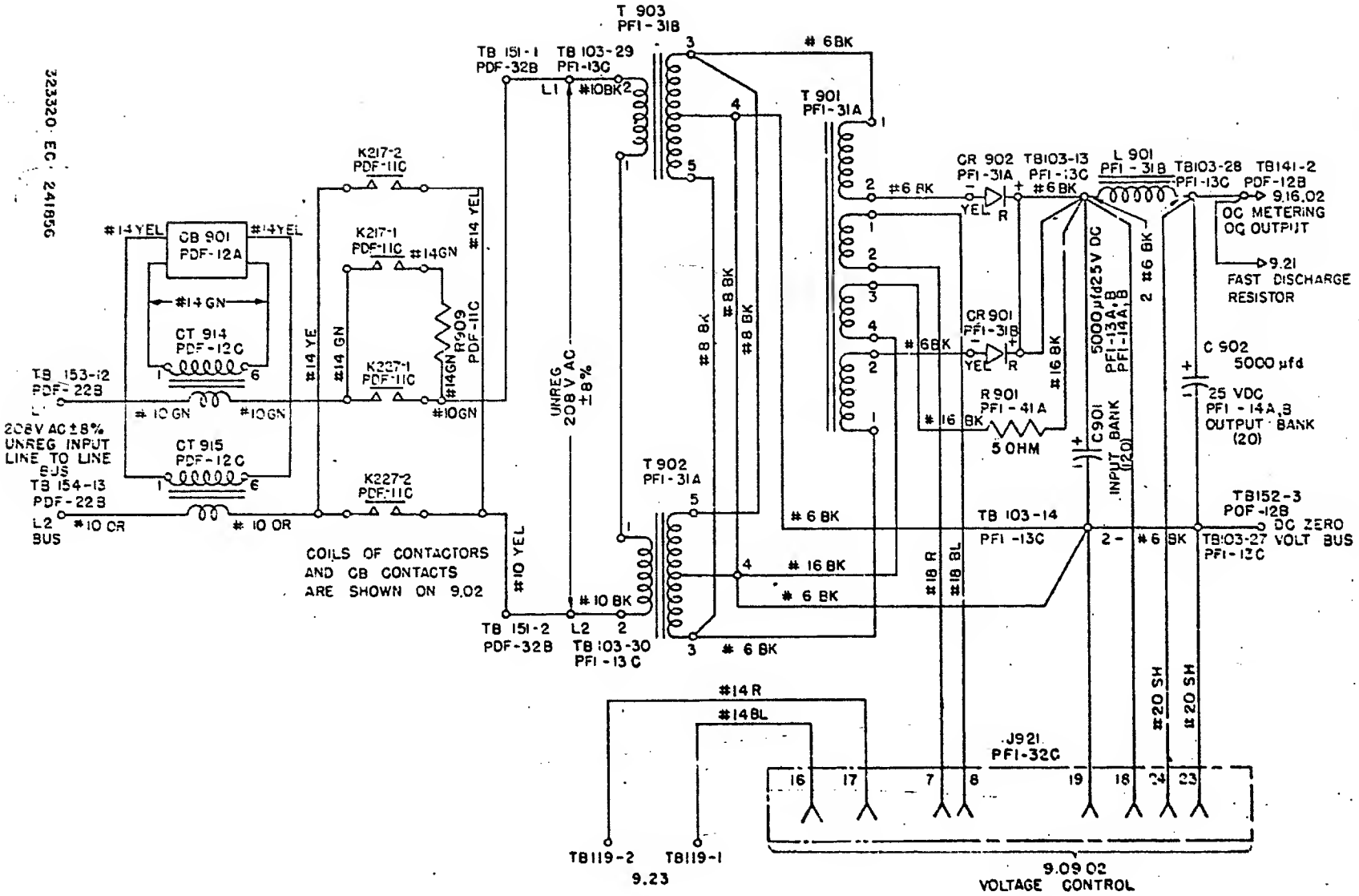
323320 EC 241856
T 903
PFI-31B
TB 151-1
PDF-32B
TB 103-29
PFI-13C
L1
#10BK
#6BK
T 901
PFI-31A
K217-2
PDF-11C
K217-1
PDF-11C
#14GN
#14YEL
CB 901
PDF-12A
#14GN
CT 914
PDF-12C
R909
PDF-11C
K227-1
PDF-11C
#14GN
#14 YE
#14 GN
#14 YEL
TB 153-12
PDF-22B
#10 GN
#10GN
208V AC±8%
UNREG INPUT
LINE TO LINE
BUS
CT 915
PDF-12C
TB 154-13
PDF-22B
L2
BUS
#10 OR
#10 OR
K227-2
PDF-11C
COILS OF CONTACTORS
AND CB CONTACTS
ARE SHOWN ON 9.02
UNREG
208 V AC
±8%
#10 YEL
#10 BK
TB 151-2
PDF-32B
L2
TB 103-30
PFI-13C
T 902
PFI-31A
#8 BK
#8 BK
#8 BK
#6 BK
#16 BK
#6 BK
#6 BK
CR 902
PFI-31A
YEL
R
TB103-13
PFI-13C
#6 BK
CR 901
PFI-31B
YEL
R
#6 BK
#16 BK
R 901
PFI-41A
5 OHM
#16 BK
#18 R
#18 BL
L 901
PFI-31B
TB103-28
PFI-13C
TB141-2
PDF-12B
9.16.02
OC METERING
OC OUTPUT
9.21
FAST DISCHARGE
RESISTOR
5000µfd25V DC
PFI-13A,B
PFI-14A,B
2 #6 BK
C 902
5000 µfd
25 VDC
PFI-14A,B
OUTPUT BANK
(20)
C 901
INPUT BANK
(120)
TB 103-14
PFI-13C
2-
#6 BK
TB152-3
PDF-12B
DC ZERO
VOLT BUS
TB103-27
PFI-13C
#20 SH
#20 SH
#14 R
#14BL
J921
PFI-32C
16
17
7
8
19
18
24
23
TB119-2
TB119-1
9.23
9.09 02
VOLTAGE CONTROL

VOLTAGE CONTROL CIRCUIT FOR +15V DC & -30V DC

9.09.02
9.10.02
SHEET 1 OF 2

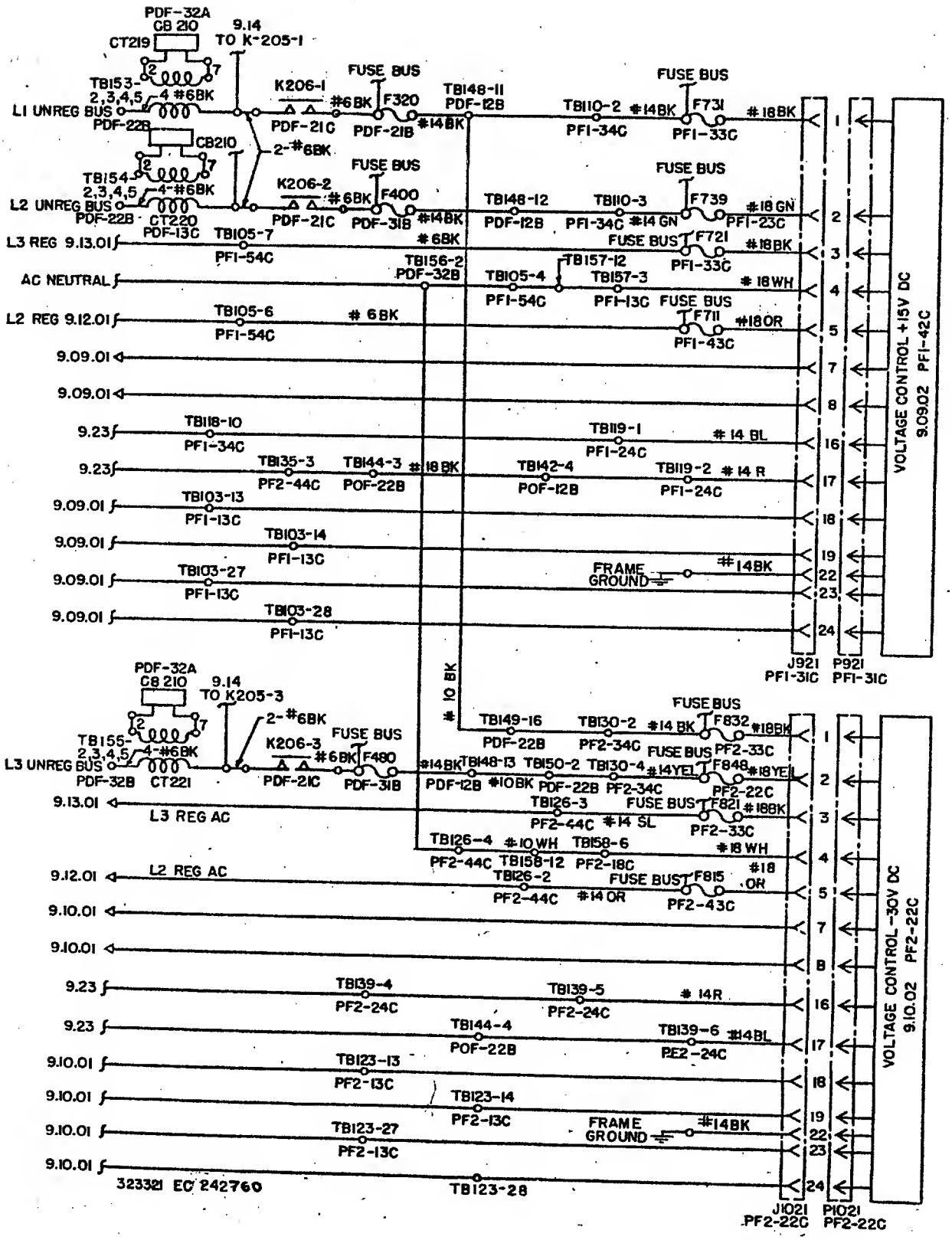

323321 EC 242760

VOLTAGE CONTROL FOR +15V 70 AMP AND -30V 40 AMP DC SUPPLIES

9.09.02
9.10.02
SHEET 2OF2

NOTE +15VAND -30V VOLTAGE CONTROL CHASSIS ARE INTERCHANGEABLE
PLUGGABLE UNITS IDENTIFIED BY THE SAME NUMBER ARE INTERCHANGEABLE
RESISTORS ARE ±10% UNLESS NOTED OTHERWISE
WIRES ARE 20 GAGE

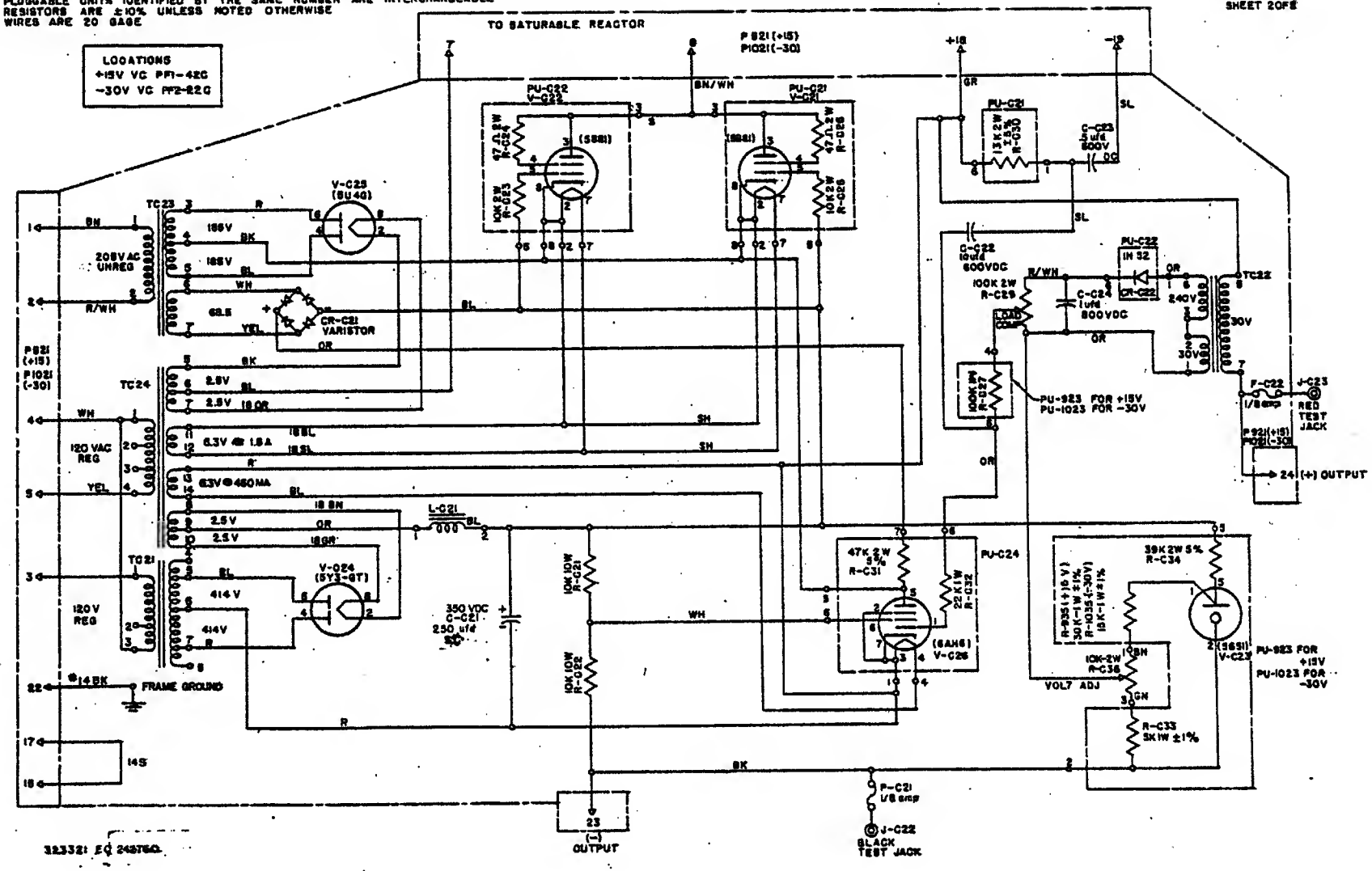

32332: EC 245760

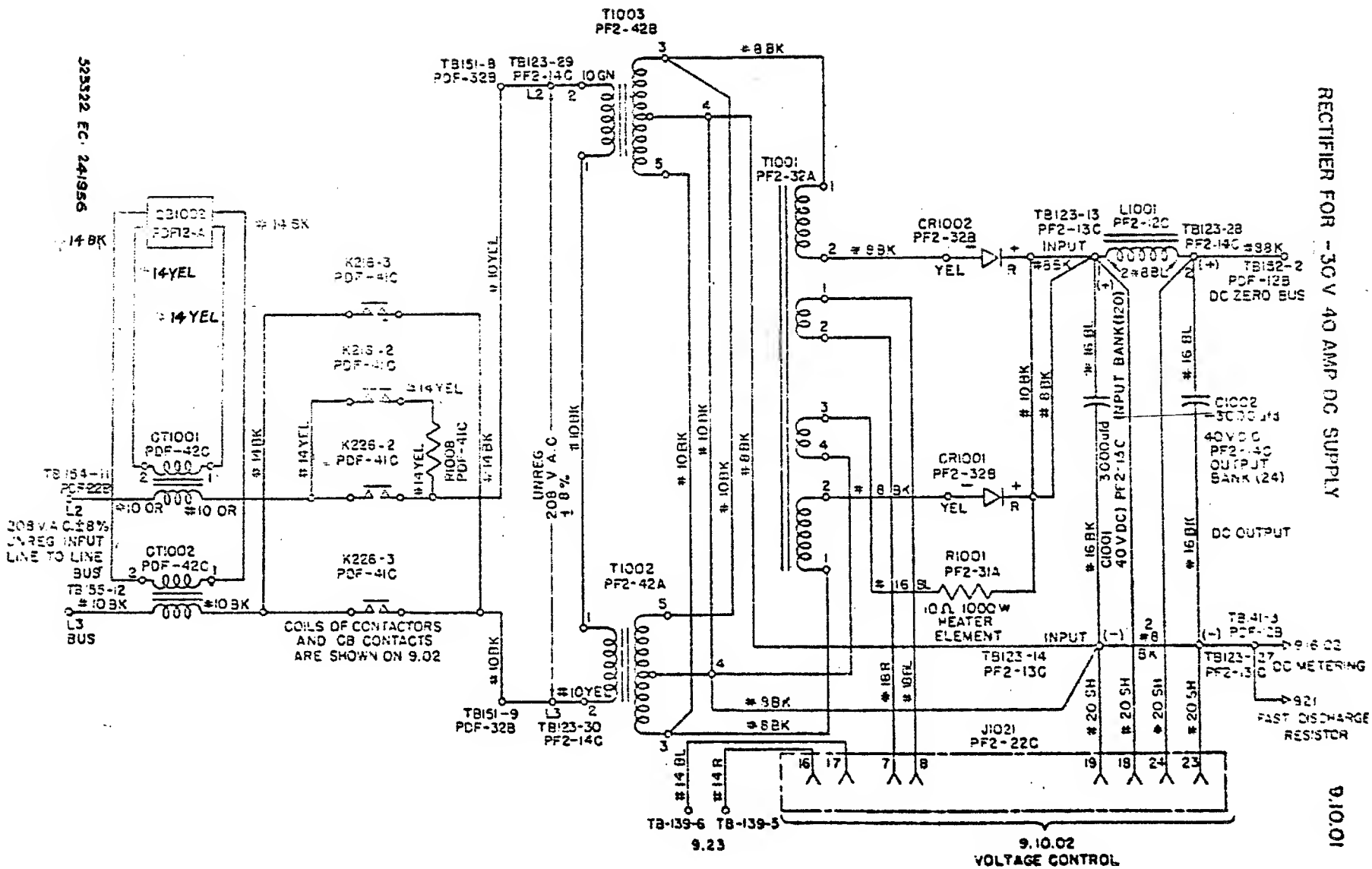
RECTIFIER FOR -30 V 40 AMP DC SUPPLY
9.10.01
323322 EC 241956
T1003
PF2-42B
T1001
PF2-32A
T1002
PF2-42A
CR1002
PF2-32B
CR1001
PF2-32B
TB123-13
PF2-13C
INPUT
L1001
PF2-12C
TB123-28
PF2-14C
TB132-2
PDF-12B
DC ZERO BUS
C1002
40 V DC
PF2-14C
OUTPUT
BANK (24)
DC OUTPUT
C1001
40 V DC
PF2-14C
(INPUT BANK (120))
R1001
PF2-31A
10 Ω 1000 W
HEATER
ELEMENT
TB123-14
PF2-13C
TB41-3
PDF-12B
TB123-27
PF2-13C
DC METERING
921
FAST DISCHARGE
RESISTOR
J1021
PF2-22C
9.10.02
VOLTAGE CONTROL
TB-139-6
TB-139-5
9.23
TB151-8
PDF-32B
TB123-29
PF2-14C
TB151-9
PDF-32B
TB123-30
PF2-14C
UNREG
208 V A.C
± 8%
CT1001
PDF-42C
CT1002
PDF-42C
TB154-11
PDF-22B
TB155-12
L2
208 V A.C ±8%
UNREG INPUT
LINE TO LINE
BUS
L3
BUS
K216-3
PDF-41C
K216-2
PDF-41C
K226-2
PDF-41C
K226-3
PDF-41C
R1008
PDF-41C
COILS OF CONTACTORS
AND CB CONTACTS
ARE SHOWN ON 9.02

9.11.02
9.12.02
9.13.02

AC LINE REGULATOR FOR LINES 1, 2 & 3

ALL WIRES 20 GA UNLESS OTHERWISE NOTED

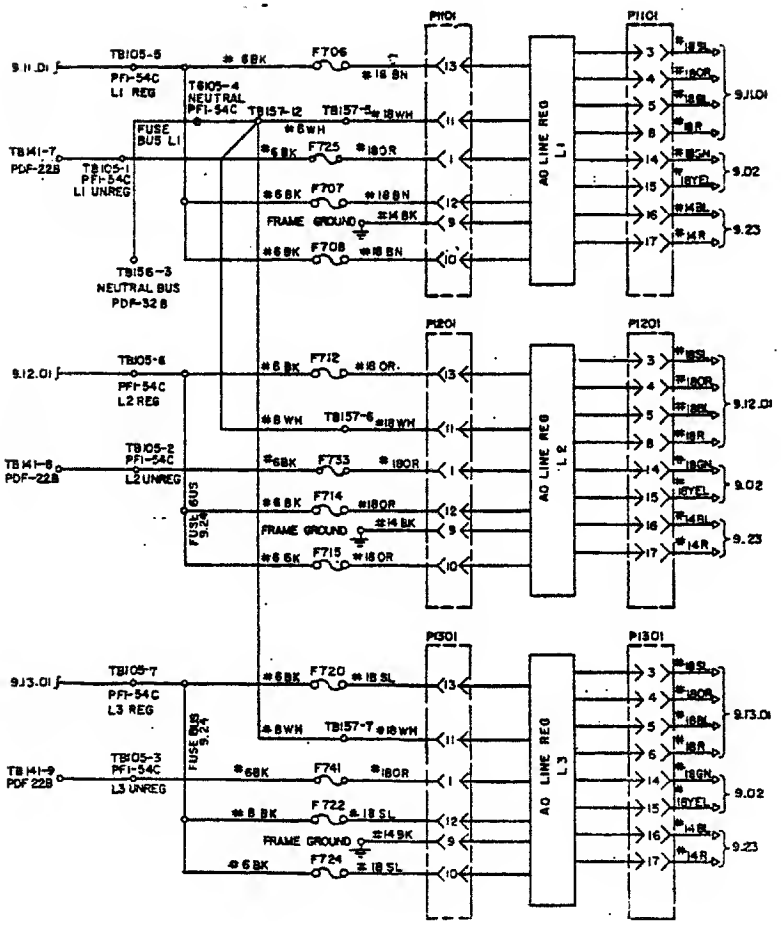

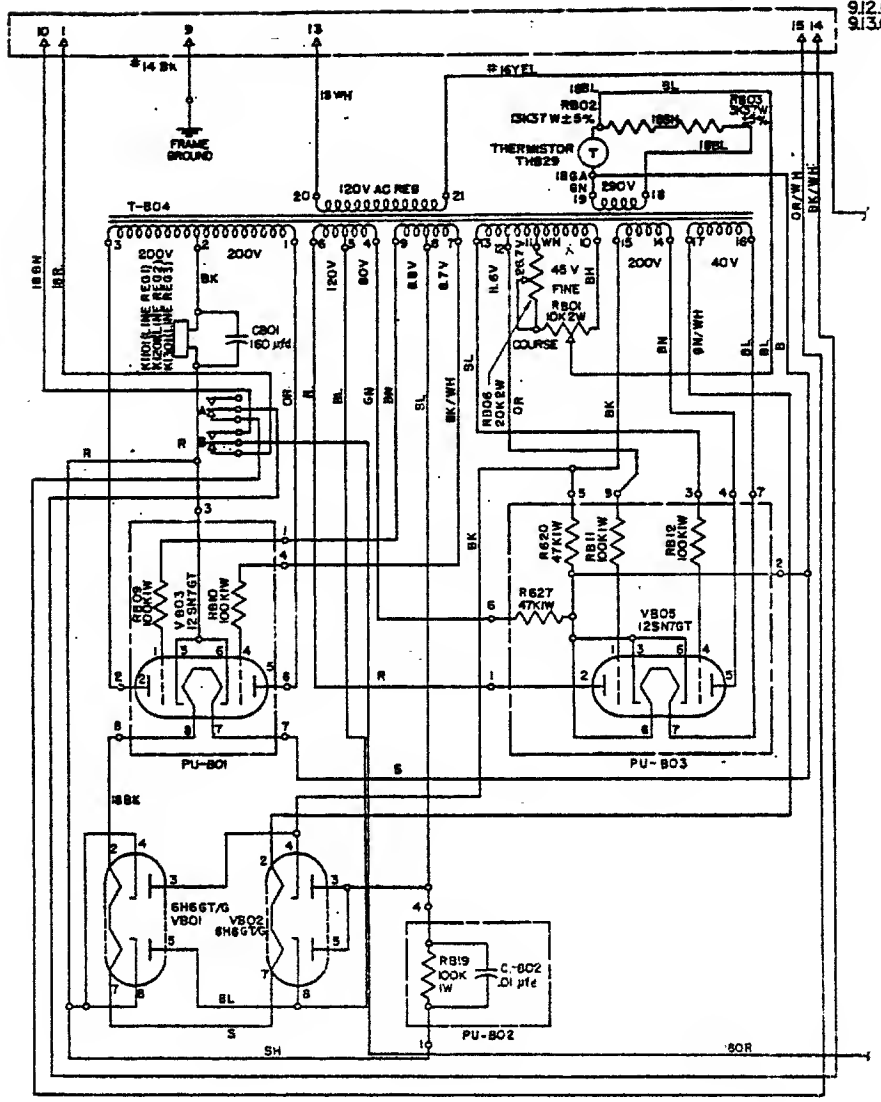

323325 EC\24U99

AC LINE REGULATOR FOR LINES 1, 2 & 3

ALL WIRES 20 GA UNLESS OTHERWISE NOTED

9.11.02

9.12.02

9.13.02

SHEET 2 OF 2

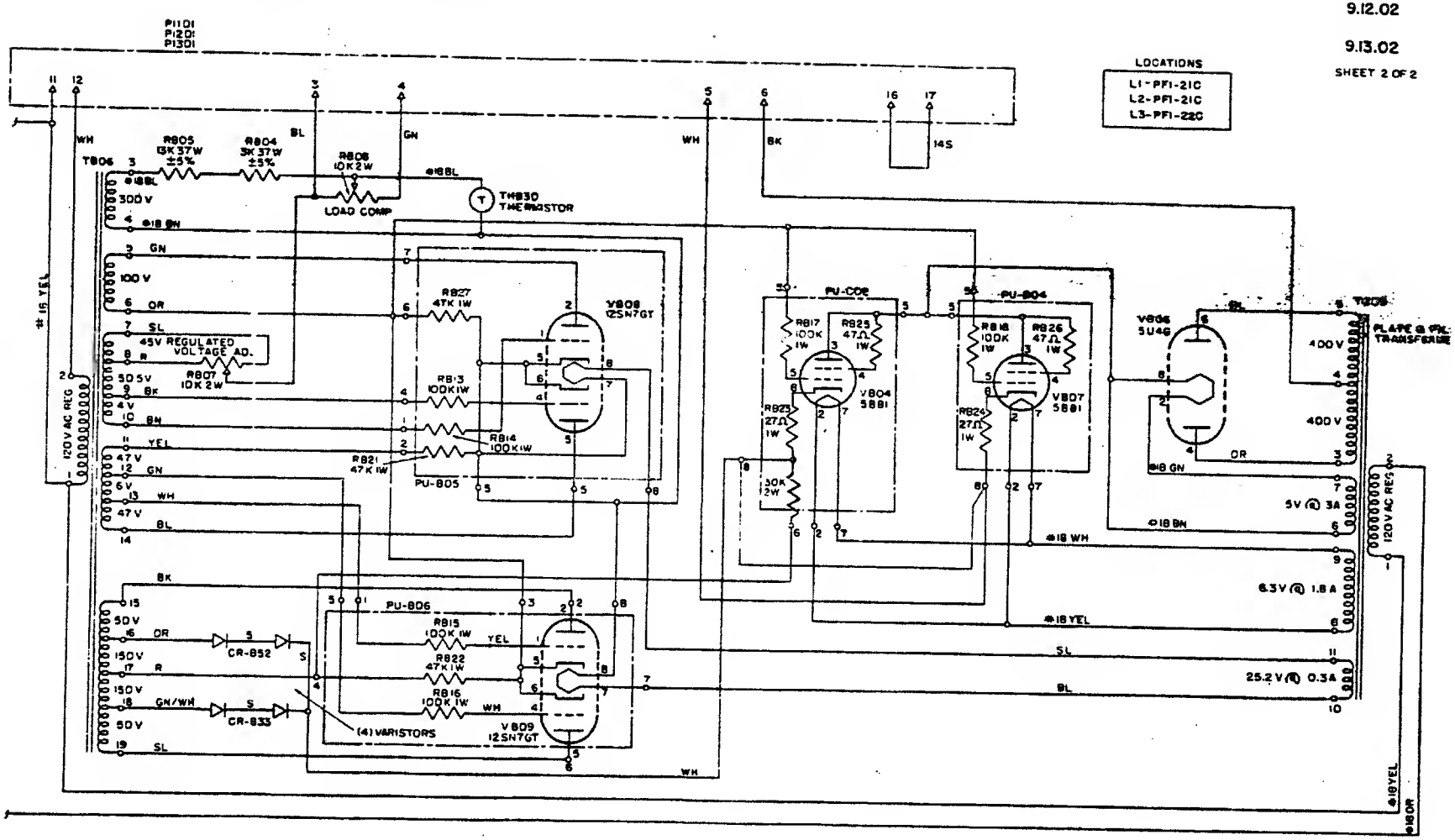

525325 EC - 241150

AC LINE REGULATOR FOR LINES 1,2 & 3

ALL WIRES 20 GA UNLESS OTHERWISE NOTED

9.11.02

9.12.02

9.13.02

SHEET 2 OF 2

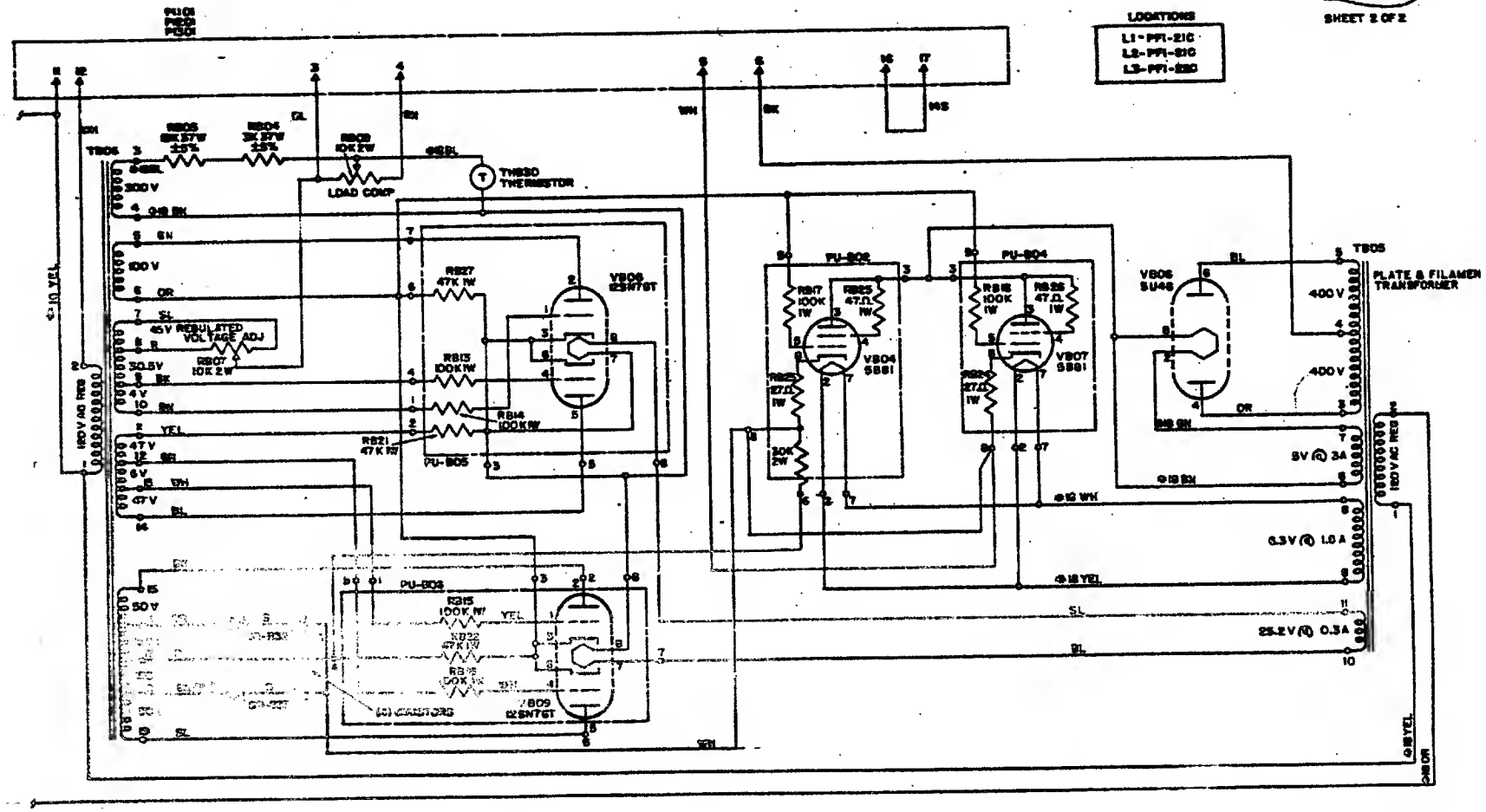

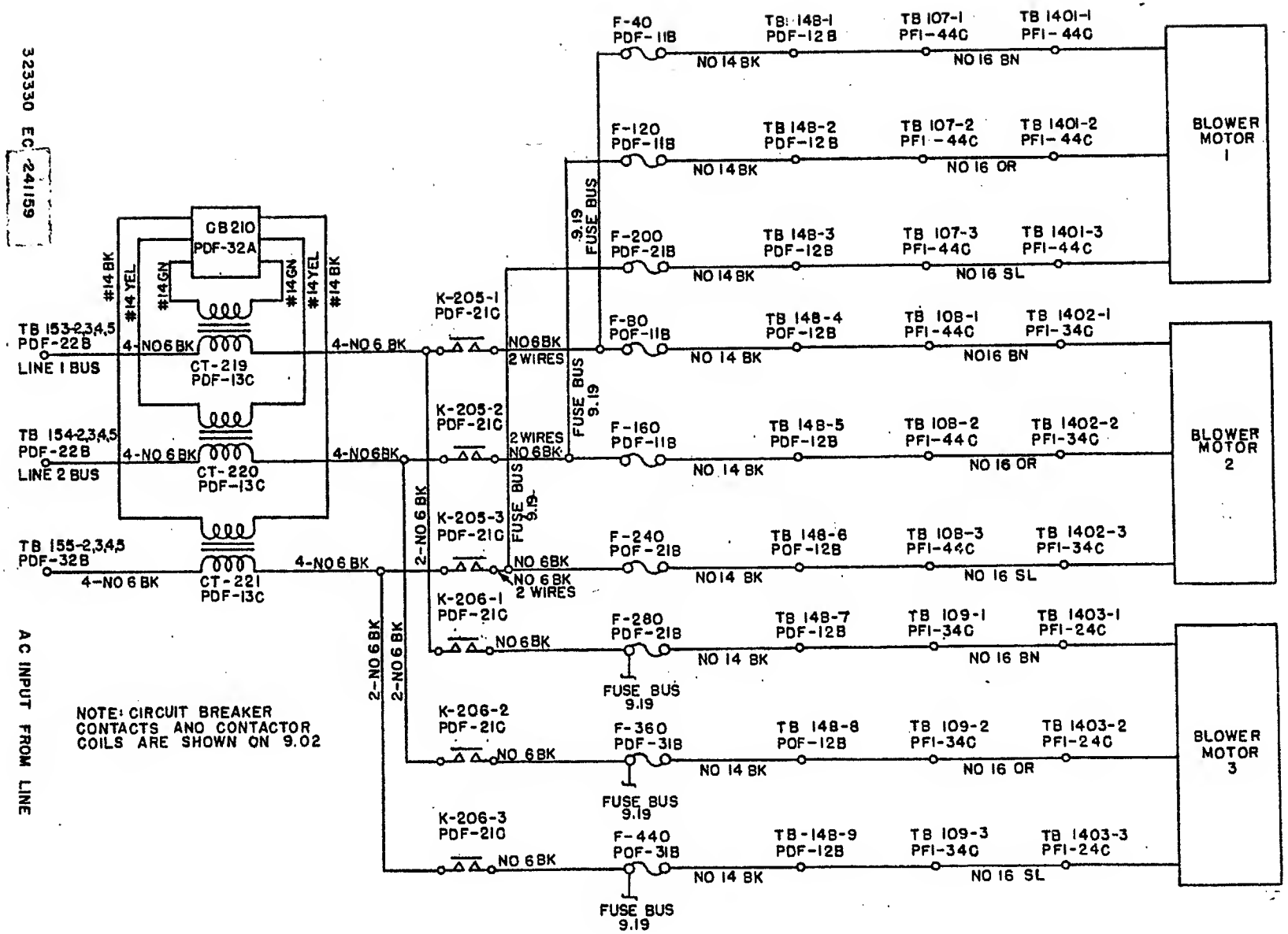
323330 EC 241159
AC INPUT FROM LINE
TB 153-2,3,4,5
PDF-22B
LINE 1 BUS
TB 154-2,3,4,5
PDF-22B
LINE 2 BUS
TB 155-2,3,4,5
PDF-32B
4-NO 6 BK
CB 210
PDF-32A
#14 BK
#14 YEL
#14 GN
CT-219
PDF-13C
CT-220
PDF-13C
CT-221
PDF-13C
K-205-1
PDF-21C
K-205-2
PDF-21C
K-205-3
PDF-21C
K-206-1
PDF-21C
K-206-2
PDF-21C
K-206-3
PDF-21C
NO 6 BK
2 WIRES
2-NO 6 BK
FUSE BUS 9.19
F-40
PDF-11B
F-120
PDF-11B
F-200
PDF-21B
F-80
PDF-11B
F-160
PDF-11B
F-240
PDF-21B
F-280
PDF-21B
F-360
PDF-31B
F-440
PDF-31B
TB 148-1
PDF-12B
TB 148-2
PDF-12B
TB 148-3
PDF-12B
TB 148-4
PDF-12B
TB 148-5
PDF-12B
TB 148-6
PDF-12B
TB 148-7
PDF-12B
TB 148-8
PDF-12B
TB 148-9
PDF-12B
TB 107-1
PFI-44C
TB 107-2
PFI-44C
TB 107-3
PFI-44C
TB 108-1
PFI-44C
TB 108-2
PFI-44C
TB 108-3
PFI-44C
TB 109-1
PFI-34C
TB 109-2
PFI-34C
TB 109-3
PFI-34C
TB 1401-1
PFI-44C
TB 1401-2
PFI-44C
TB 1401-3
PFI-44C
TB 1402-1
PFI-34C
TB 1402-2
PFI-34C
TB 1402-3
PFI-34C
TB 1403-1
PFI-24C
TB 1403-2
PFI-24C
TB 1403-3
PFI-24C
NO 14 BK
NO 16 BN
NO 16 OR
NO 16 SL
BLOWER MOTOR 1
BLOWER MOTOR 2
BLOWER MOTOR 3
NOTE: CIRCUIT BREAKER CONTACTS AND CONTACTOR COILS ARE SHOWN ON 9.02

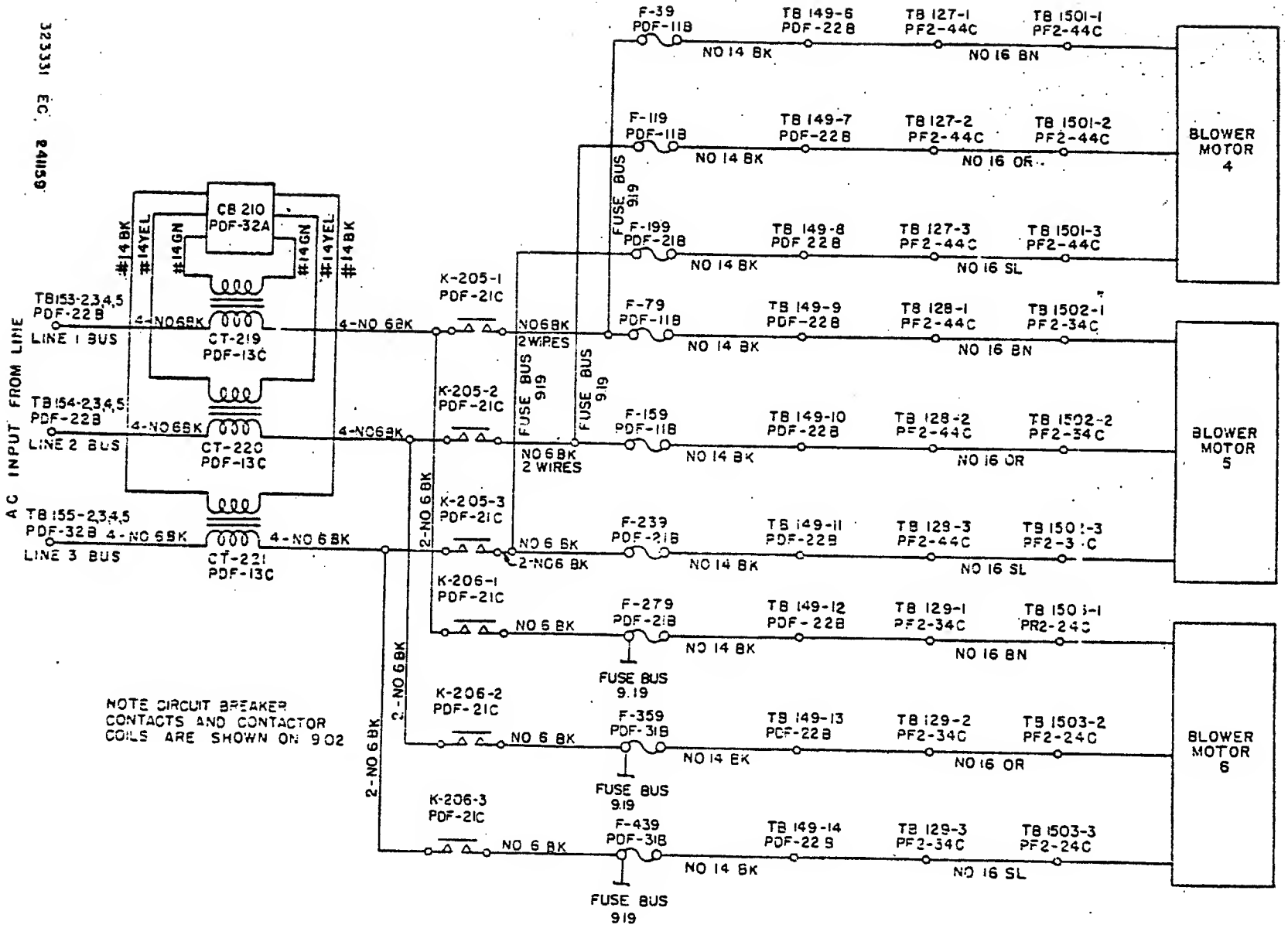

323331 EC 241159

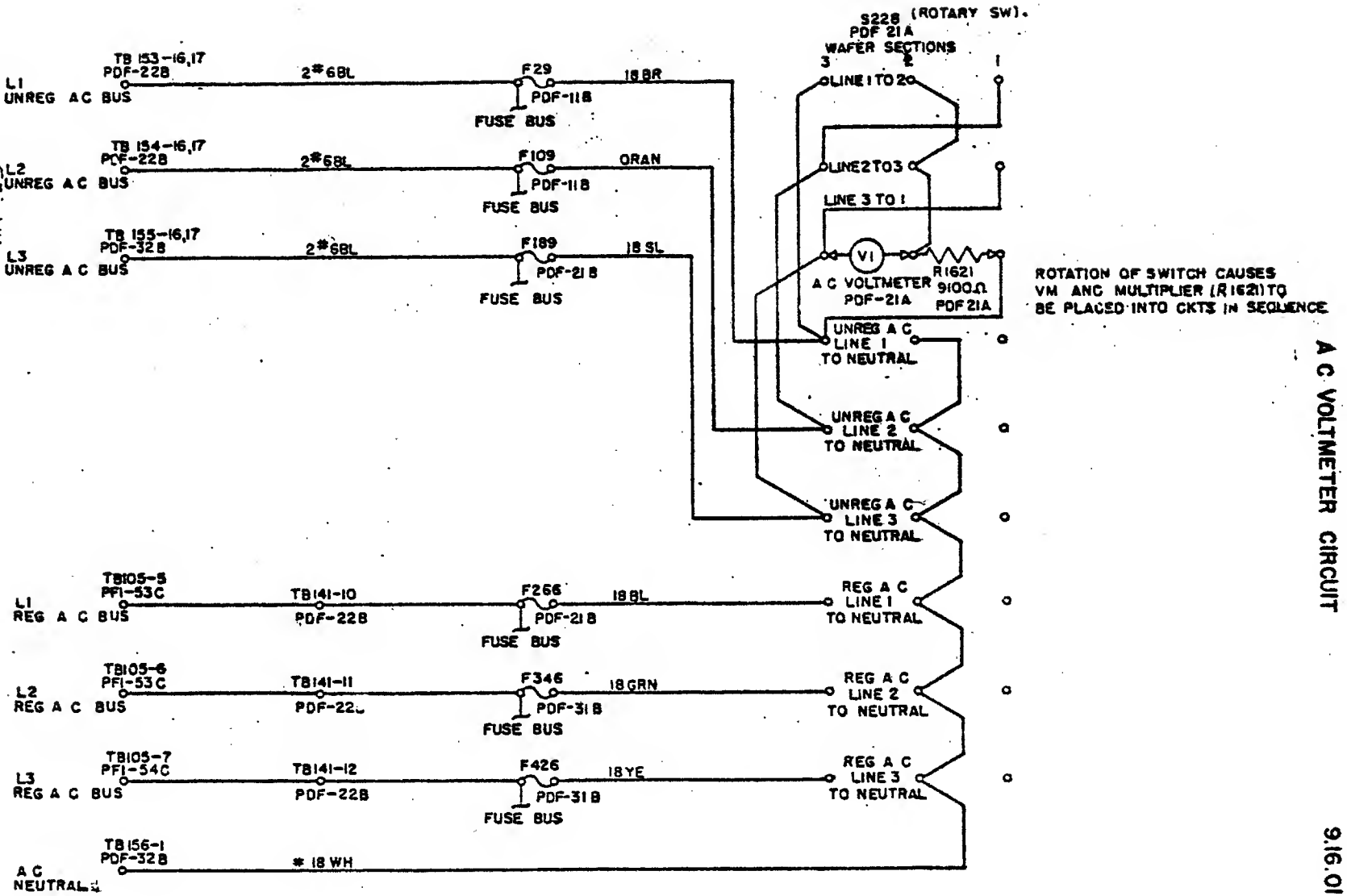

323332 E C / 241188

A C VOLTMETER CIRCUIT

9.16.01

DC METERING

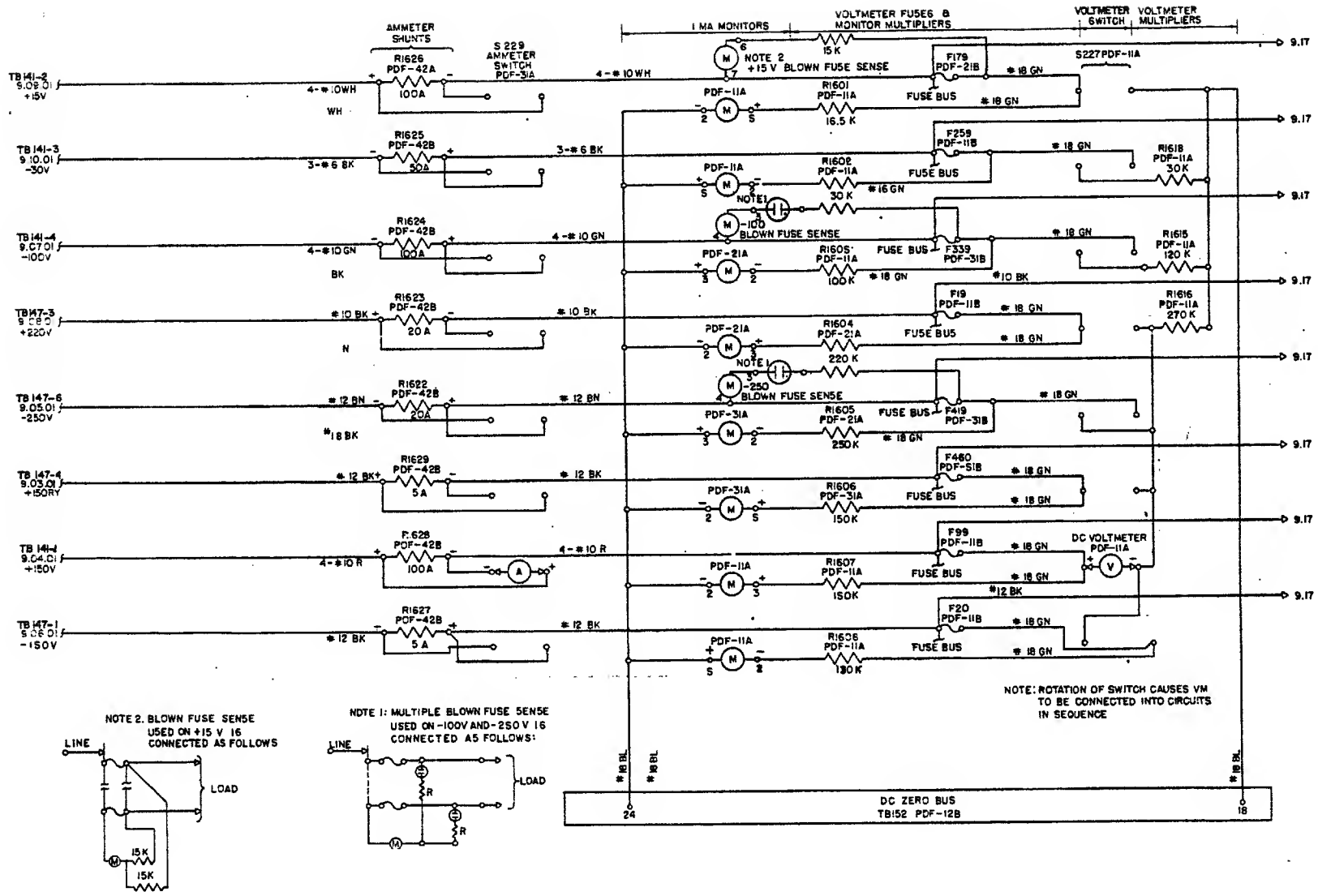
AMMETER SHUNTS
S 229 AMMETER SWITCH PDF-31A
1 MA MONITORS
VOLTMETER FUSES & MONITOR MULTIPLIERS
VOLTMETER SWITCH
VOLTMETER MULTIPLIERS
TB141-2 9.09.01 +15V
TB141-3 9.10.01 -30V
TB141-4 9.07.01 -100V
TB147-3 9.08.01 +220V
TB147-6 9.05.01 -250V
TB147-4 9.03.01 +150RY
TB141-1 9.04.01 +150V
TB147-1 9.06.01 -150V
R1626 PDF-42A 100A
R1625 PDF-42B 50A
R1624 PDF-42B 100A
R1623 PDF-42B 20A
R1622 PDF-42B 20A
R1629 PDF-42B 5A
R1628 PDF-42B 100A
R1627 PDF-42B 5A
NOTE 2 +15 V BLOWN FUSE SENSE
-100 BLOWN FUSE SENSE
-250 BLOWN FUSE SENSE
NOTE 1
R1601 PDF-11A 16.5 K
R1602 PDF-11A 30 K
R1605 PDF-11A 100 K
R1604 PDF-21A 220 K
R1605 PDF-21A 250 K
R1606 PDF-31A 150 K
R1607 PDF-11A 150 K
R1608 PDF-11A 130 K
F179 PDF-21B
F259 PDF-11B
F339 PDF-31B
F19 PDF-11B
F419 PDF-31B
F460 PDF-51B
F99 PDF-11B
F20 PDF-11B
FUSE BUS
S227 PDF-11A
R1618 PDF-11A 30 K
R1615 PDF-11A 120 K
R1616 PDF-11A 270 K
DC VOLTMETER PDF-11A
NOTE: ROTATION OF SWITCH CAUSES VM TO BE CONNECTED INTO CIRCUITS IN SEQUENCE
DC ZERO BUS TB152 PDF-12B
NOTE 2. BLOWN FUSE SENSE USED ON +15 V 16 CONNECTED AS FOLLOWS
NOTE 1: MULTIPLE BLOWN FUSE SENSE USED ON -100V AND -250 V 16 CONNECTED AS FOLLOWS:
LINE
LOAD
15K
15K
R

DC VOLTMETER AND MONITOR CIRCUIT

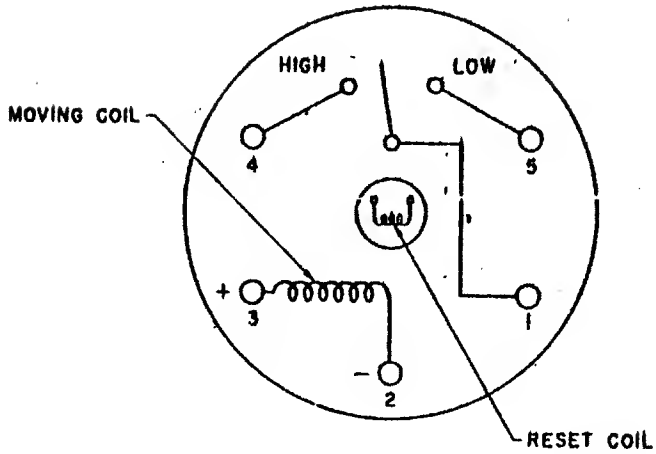

VOLTAGE MONITOR-WIRING SIDE

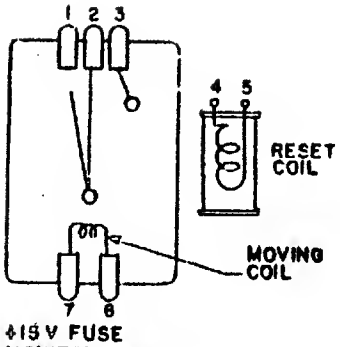

+15 V FUSE
MONITOR WIRING SIDE

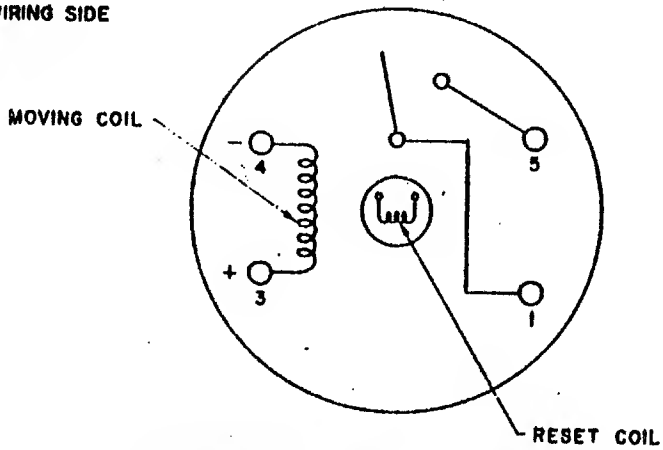

−100 V AND −250 V
BIAS VOLTAGE FUSE MONITOR-WIRING SIDE

9.17.01

DC FUSE LOCATION CHART

FUSE NO.	AMPS.	PART NO.
1	1	322891
2	1	322891
3	1	322891
4	1	322891
5	1	322891
6	1	322891
7	1	322891
8	1	322891
9	1	322891
10	1	322891
11	1	322891
12	1	322891
13	1	322891
14	1	322891
15	1	322891
16		*
17		*
18		*
19	1	322891
20	1	322891
41	2	322892
42	2	322892
43		*
44		*
45	1	322891
46	1	322891
47	2	322892
48		*
49		*
50		*
51		*
52		*
53		*
54		*
55		*
56		*
57		*
58		*
59		*
60	3	322893
81	2	322892
82	3	322893
83	3	322893
84	3	322893
85	3	322893
86	3	322893
87	3	322893
88	2	322892
89	3	322893
90	3	322893
91	2	322892
92	2	322892
93	2	322892
94	1	322891
95	5	322894
96		*
97		*
98		*
99		*
100		*

FUSE NO.	AMPS.	PART NO.
121	3	322893
122	3	322893
123		*
124		*
125	3	322893
126	3	322893
127	1	322891
128		*
129		*
130		*
131		*
132		*
133		*
134		*
135		*
136		*
137		*
138		*
139		*
140	SPARE	*
161	5	322894
162	5	322894
163	5	322894
164	5	322894
165	3	322893
166	3	322893
167	2	322892
168	5	322894
169	5	322894
170	5	322894
171	3	322893
172	3	322893
173	5	322894
174	2	322892
175	5	322894
176	2	322892
177		*
178		*
179	1	322891
180		*
201	1	322891
202	1	322891
203		*
204		*
205	5	322894
206	5	322894
207	5	322894
208		*
209		*
210		*
211		*
212		*
213		*
214		*
215		*
216		*
217		*
218		*
219		*

FUSE NO.	AMPS.	PART NO.
220		*
241	2	322892
242	5	322894
243	3	322893
244	2	322892
245	2	322892
246	2	322892
247	2	322892
248	2	322892
249	2	322892
250	2	322892
251	1	322891
252	1	322891
253	1	322891
254	1	322891
255	3	322893
256		*
257		*
258		*
259	1	322891
260		*
281	1	322891
282	1	322891
283		*
284		*
285	2	322892
286	2	322892
287	1	322891
288		*
289		*
290		*
291		*
292		*
293		*
294		*
295		*
296		*
297		*
298		*
299		*
300		*
321	2	322892
322	3	322893
323	3	322893
324	3	322893
325	3	322893
326	3	322893
327	3	322893
328	2	322892
329	2	322892
330	3	322893
331	2	322892
332	2	322892
333	2	322892
334	1	322891
335	5	322894
336		*
337		*
338		*

* 322088(107) DUMMY FUSE

FUSE NO.	AMPS.	PART NO.
339	1	322891
340	1	322891
361	3	322893
362	3	322893
363		*
364		*
365	3	322893
366	2	322892
367	1	322891
368		*
369		*
370		*
371		*
372		*
373		*
374		*
375		*
376	5	322894
377	5	322894
378		*
379		*
380	1	322891
401	1	322891
402	1	322891
403	1	322891
404	1	322891
405	1	322891
406	1	322891
407	1	322891
408	1	322891
409	1	322891
410	1	322891
411	1	322891
412	1	322891
413	1	322891
414	1	322891
415	1	322891
416		*
417		*
418		*
419	1	322891
420	1	322891
441	2	322892
442	2	322892
443		*
444		*
445	1	322891
446	1	322891
447	1	322891
448		*
449		*
450		*
451		*
452		*
453		*
454		*
455		*
456		*
457		*
458		*
459		*
460	1	322891

512716 EC 242496

+ 220 VOLT DC FUSING

SHEET 1 OF 6

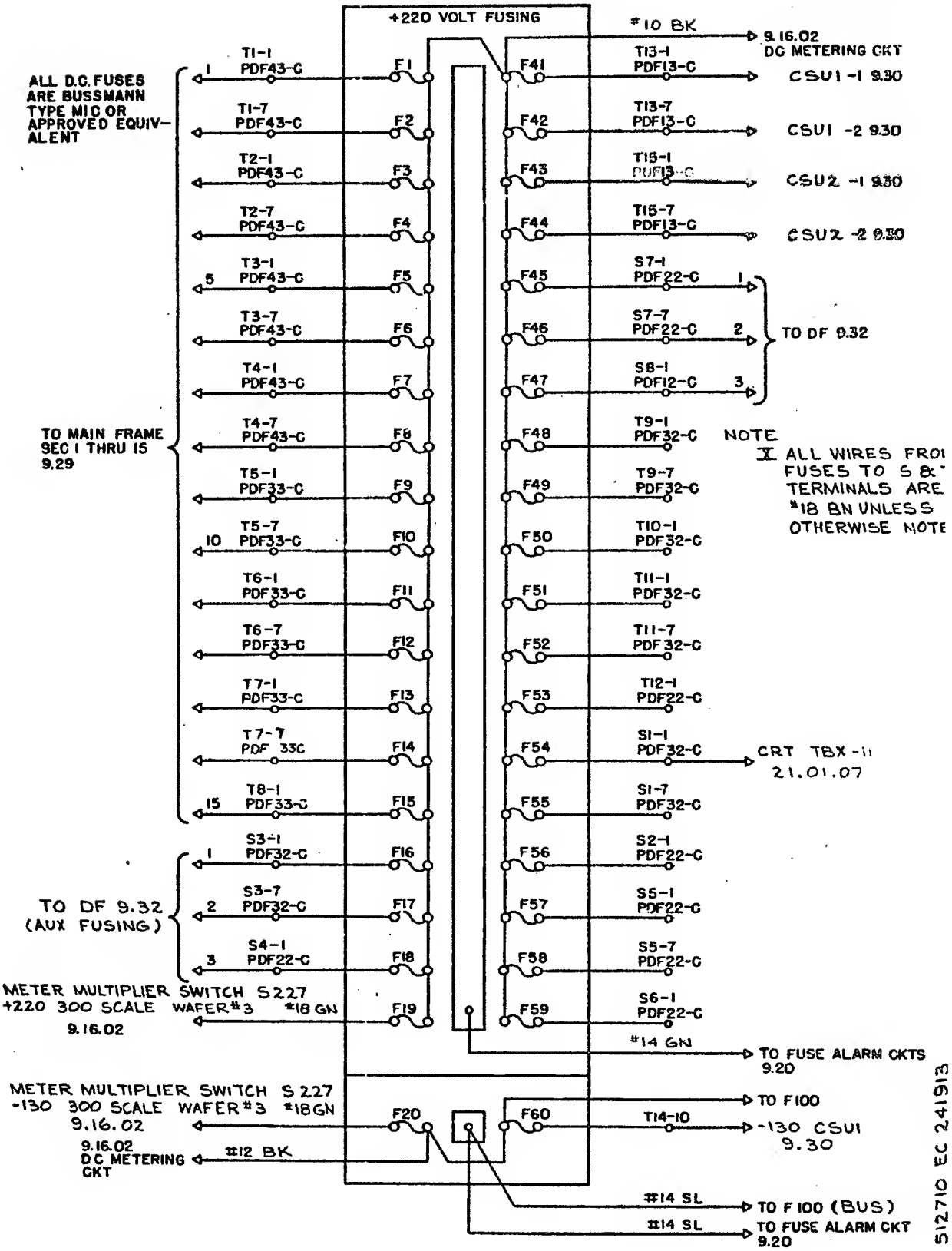

512710 EC 241913

+150 VOLT DC FUSING

SHEET 2 OF 6

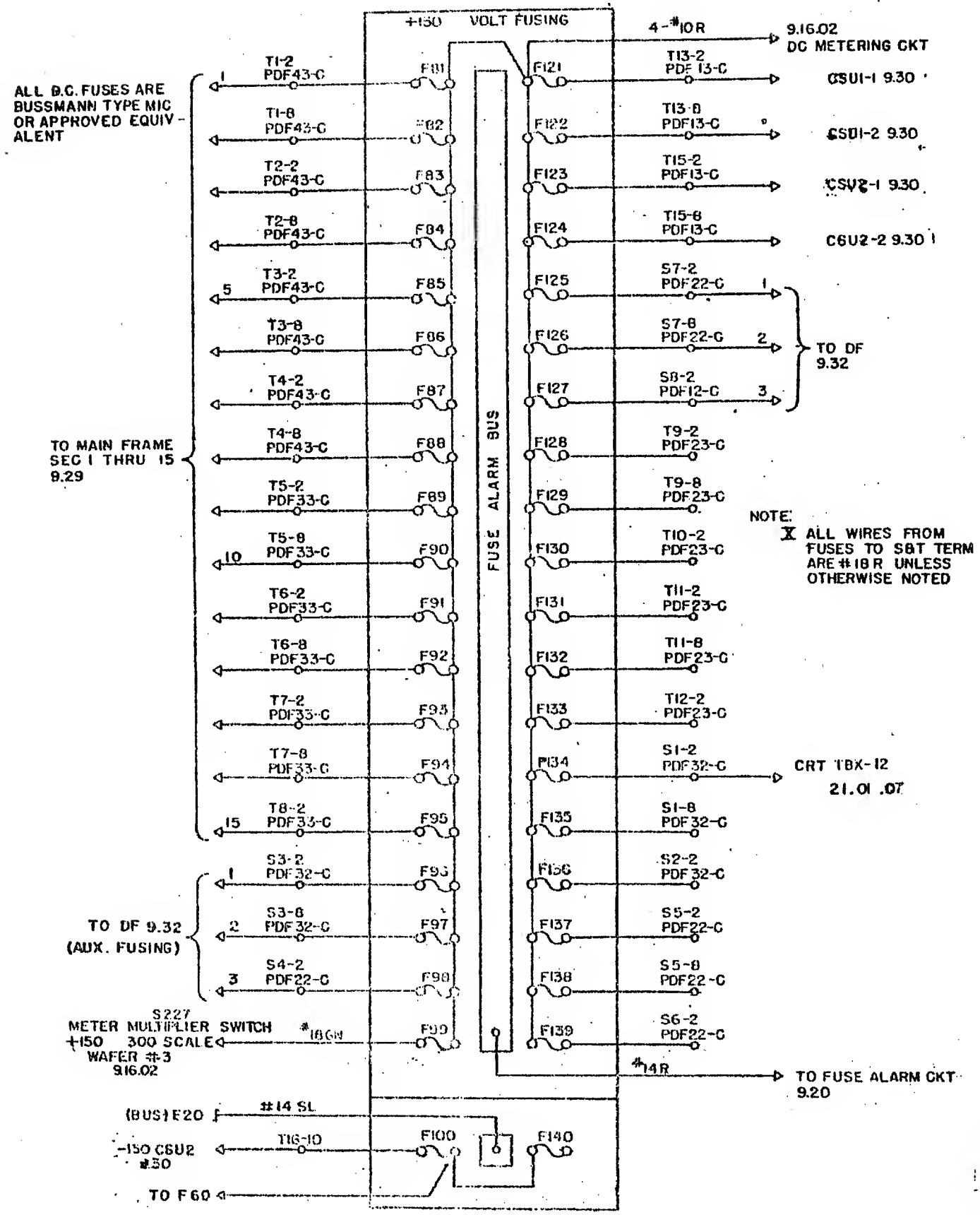

512712

NOTE:
II PRINT TO ENG SPEC 895291.

+ 15 VOLT DC FUSING

9.17

SHEET 3 OF 6

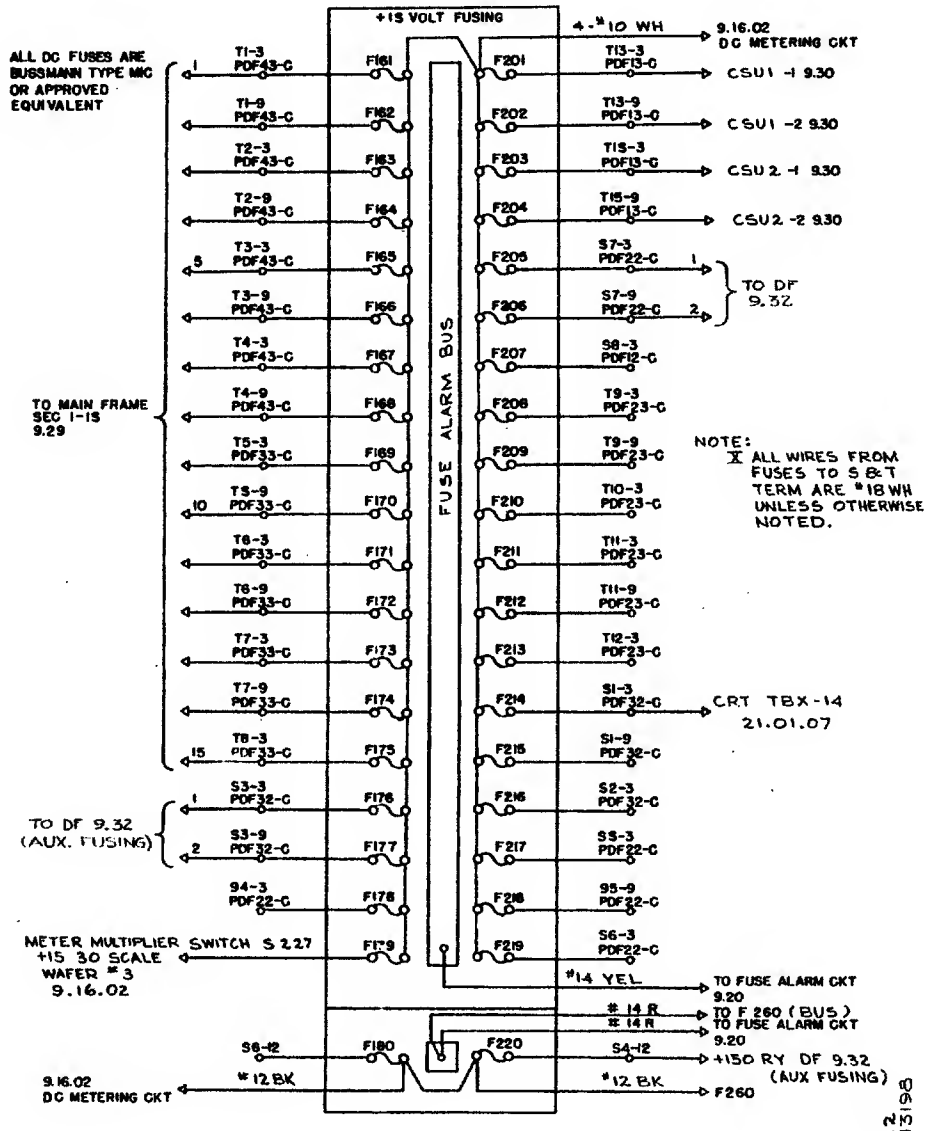

NOTE:
X ALL WIRES FROM FUSES TO S 8&T TERM ARE #18 WH UNLESS OTHERWISE NOTED.

WAS, 704-3554

512712
EC 243198

STANDARDS CONTROL	RELEASED FOR MANUFACTURE	QTY.	512712
NONE	503629		

DATE	CHANGE NO.
6-3-59	241153
7-15-59	241154
10-31-59	241913
9-24-59	245196

INTERNATIONAL BUSINESS MACHINES CORP.
POWER DISTRIBUTION UNIT MODEL 746 MOD 2
SYSTEMS DIAGRAM
9.17
RET 12-16-54 NONE
J.C. 12-22-59

512712

512713

NOTE II PRINT TO ENG SPEC 895291.

-30 VOLT DC FUSING

9.17

SHEET 4 OF 6

ALL DC FUSES ARE BUSSMANN TYPE MIC OR APPROVED EQUIVALENT.

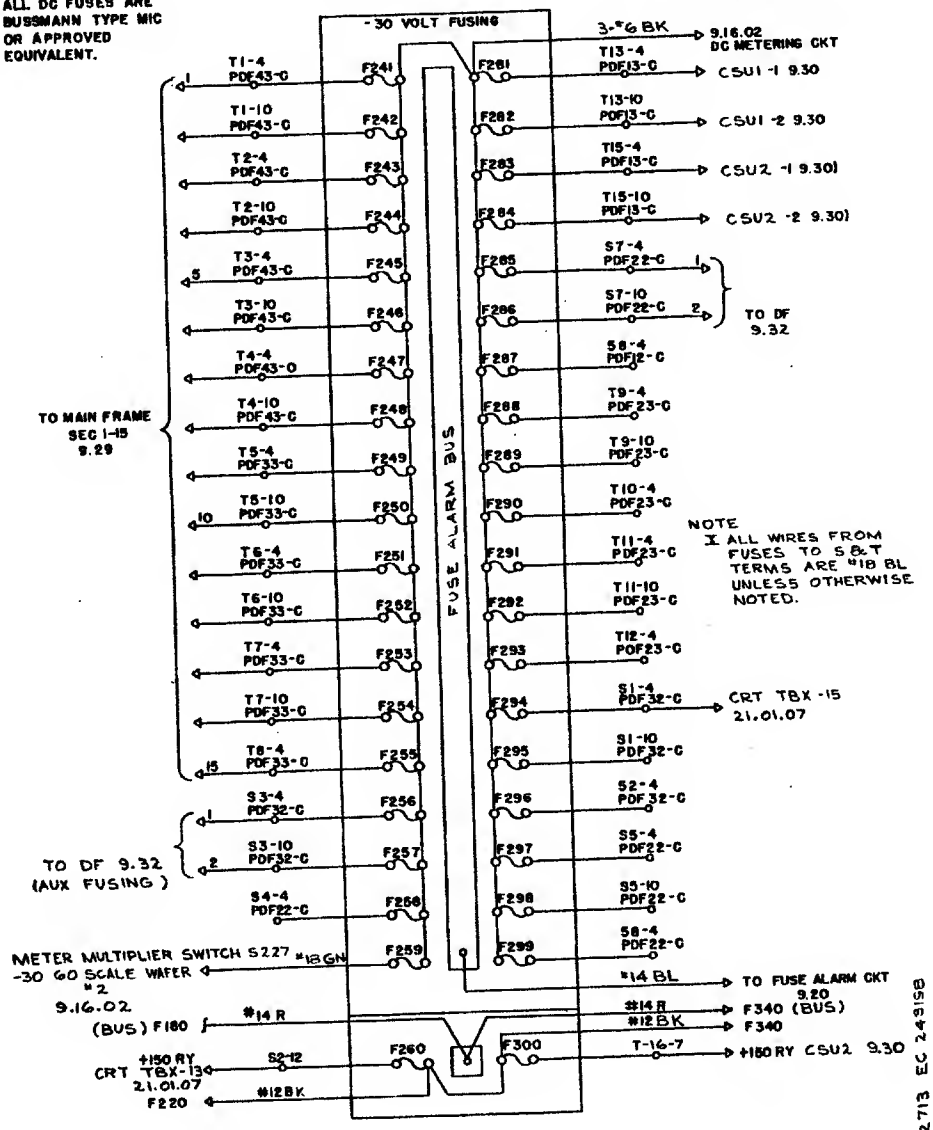

NOTE I ALL WIRES FROM FUSES TO S&T TERMS ARE #18 BL UNLESS OTHERWISE NOTED.

512713 EC 243158

WAS 704-3554

STANDARD CODE	RELEASED FOR ASSEMBLY	QTY.	512713
NONE	503629		

DATE	CHANGE NO
6-10-59	241159
7-15-59	241454
10-23-59	241913
5-24-60	243198

INTERNATIONAL BUSINESS MACHINES CORP.
PROD. POWER DISTRIBUTION UNIT
MODEL 7416 MOD 2
NAME SYSTEMS DIAGRAM
9.17
SCALE NONE
DRAWN RCT 12-16-54
TRACED JL 12-14-55
CHECKED JC 5-23-55
LAYOUT
CHECKED EJK 12/16/55

512713

512714

STANDARD CODE	RELEASED FOR ASSEMBLY	QTY.
NONE	503629	

DATE	CHANGE NO.
6-10-55	241159
10-31-55	241915

WAS 704-3554

512714

NOTE II PRINT TO ENG SPEC 895291.

-100 VOLT DC FUSING

9.17

SHEET 3 OF 6

ALL DC FUSES ARE BUSSMANN TYPE MIC OR APPROVED EQUIVALENT.

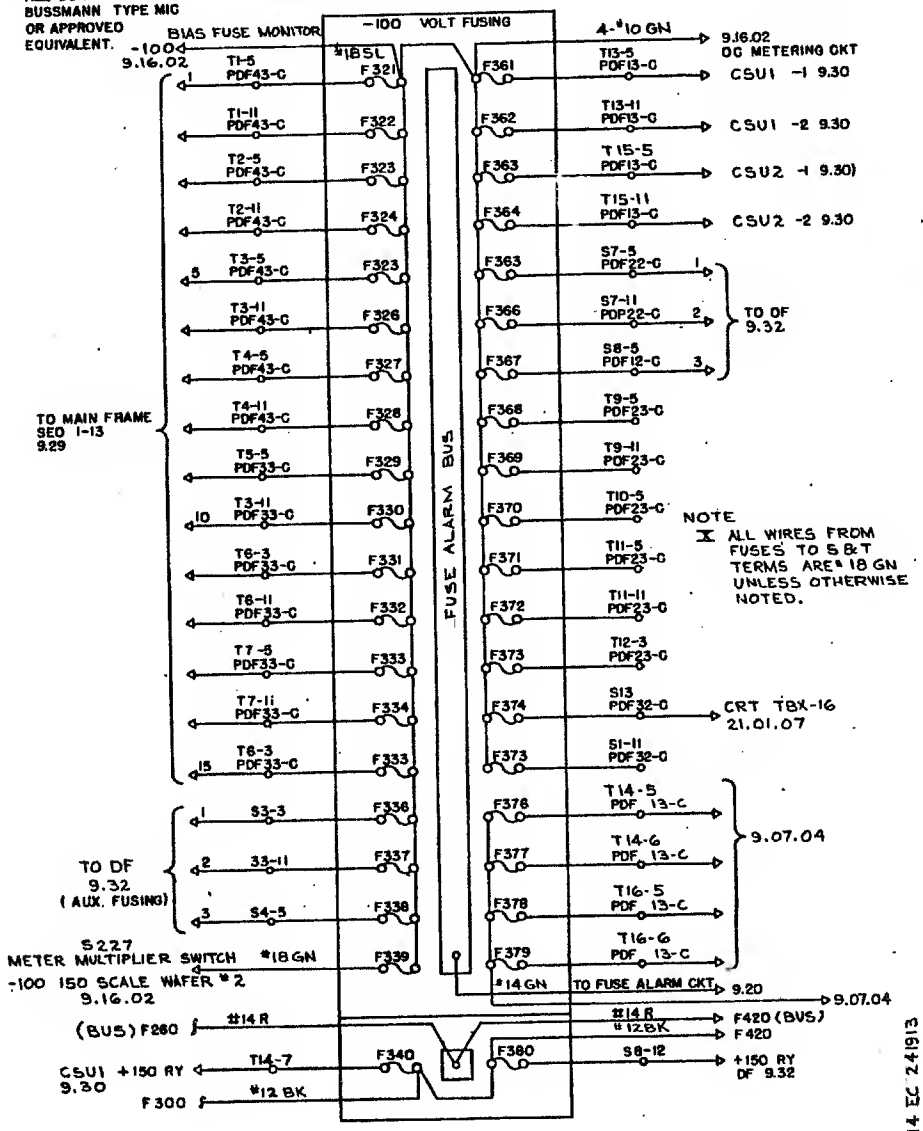

NOTE X ALL WIRES FROM FUSES TO S & T TERMS ARE #18 GN UNLESS OTHERWISE NOTED.

S12714 EC 241913

INTERNATIONAL BUSINESS MACHINES CORP.

POWER DISTRIBUTION UNIT 74-9 MOD 2

SYSTEMS DIAGRAM 9.17

DRAWN RET 12-16-54 SCALE NONE

CHECK

APPROVED JC 5-25-55

TOLERANCE UNLESS OTHERWISE NOTED: DECIMALS ± .005; FRACTIONS ± 1/64; ANGLES ± 1°

ALIGNMENT WITHIN: CONCENTRIC WITHIN; FLAT WITHIN; PARALLEL WITHIN; STRAIGHT WITHIN; SQUARE WITHIN

DO NOT SCALE DRAWING

MATERIAL SPECIFICATION; CASE DEPTH; HARDNESS; SURFACE TREATMENT

DRAWING MAY BE SCALED

OUTSIDE; INSIDE

SPEC NO; CODE IDENT NO.

512714

-250 VOLT DC FUSING

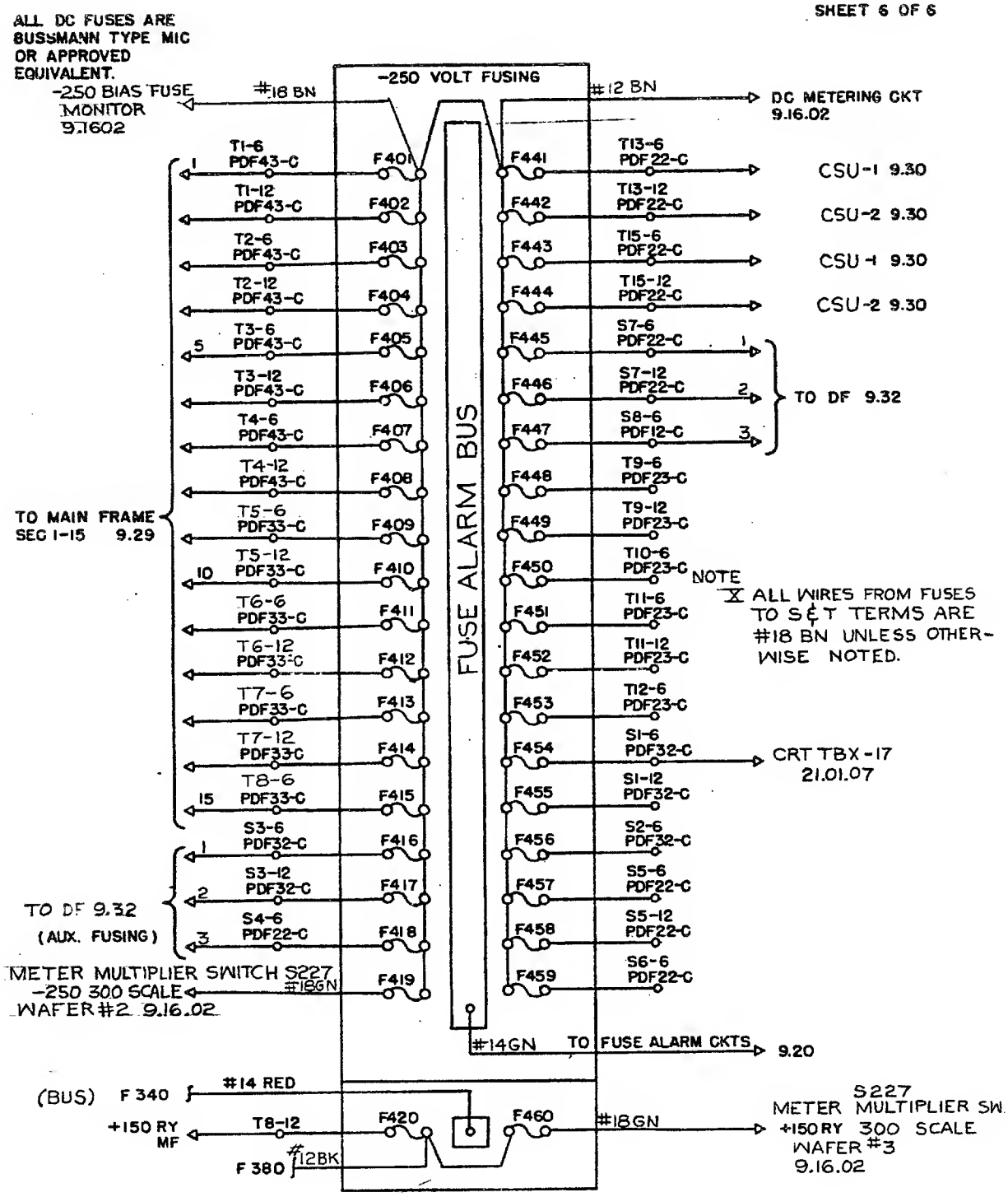

512715 EC 241913

145 704-5546

STANDARDS CODE	RELEASED FOR ASSEM	QTY
NONE	503628	512723

DATE	CHANGE NO
6-7-55	241130
9-12-55	241666
1-5-56	242270
5-28-56	243[illegible]

AC REGULATED FUSE LOCATION CHART

FUSE NO	AMPS	PART NO
5	5	322890
6	5	322890
7	5	322890
8	5	322890
9	5	322890
10	5	322890
11	5	322890
12	5	322890
13		*
14		*
15		*
16		*
17		*
18		*
19	5	322890
20		*
21		*
22		*
23	5	322890
24	5	322890
25	5	322890
26	5	322890
27		*
28		*
29		*
30		*
31		*
32		*
33		*
34		*
35	5	322890
36		*
37		*
38		*
39	5	322890
40	5	322890
41	5	322890
42	5	322890
43	5	322890
44	5	322890
45	5	322890
46	5	322890
47		*
48		*
49		*
50		*
51	5	322890
52		*
53		*
54		*
55	5	322890
56		*
57		*
58		*
59	5	322890
60	5	322890
61	5	322890
62	5	322890
63	5	322890
64	5	322890
65	5	322890
66	5	322890
67		*
68		*
69		*
70		*
71		*
72		*
73		*
74		*
75	5	322890
76		*
77		*
78		*
79		*
80		*
81		*
82		*
83		*
84		*
85	5	322890
86		*
87		*
88		*
89		*
90		*
91		*
92		*
93		*
94		*
95	5	322890
96		*
97		*
98	SPARE	*
99	SPARE	*
100		*
101		*
102		*
103		*
104		*
105	5	322890
106		*
107		*
108	SPARE	*
109	SPARE	*
110		*
111		*
112		*
113		*
114		*
115	5	322890
116		*
117		*
118		*
119		*
120		*
121		*
122		*
123		*
124		*
125	5	322890
126		*
127		*
128		*
129		*
130		*
131		*
132		*
133		*
134		*
135	5	322890
136		*
137		*
138		*
139		*
140		*
141		*
142		*
143		*
144		*
145	5	322890
146		*
147		*
148		*
149		*
150		*
151		*
152		*
153		*
154		*
155	5	322890
156		*
157		*
158		*
159		*
160		*
161		*
162		*
163		*
164		*
165	5	322890
166		*
167		*
168		*
169		*
170		*
171		*
172		*
173		*
174		*
175	5	322890
176		*
177		*
178		*
179		*
180		*
181		*
182		*
183		*
184		*
185	5	322890
186		*
187		*
188		*
189		*
190		*
191		*
192		*
193		*
194		*
195	5	322890
196		*
197		*
198		*
199		*
200		*
201		*
202		*
203		*
204		*
205	5	322890
206		*
207		*
208	SPARE	*
209	SPARE	*
210		*
211		*
212		*
213		*
214		*
215	5	322890
216		*
217		*
218		*
219		*
220		*
221		*
222		*
223		*
224		*
225	5	322890
226		*
227		*
228		*
229	5	322890
230	5	322890
231	5	322890
232	5	322890
233	5	322890
234	5	322890
235	5	322890
236	5	322890
237		*
238		*
239	SPARE	*
240		*
241		*
242		*
243		*
244		*
245	5	322890
246		*
247		*
248		*
249	SPARE	*
250	SPARE	*
251	5	322890
252	5	322890
253	5	322890
254	5	322890
255	5	322890
256	5	322890
257	5	322890
258	5	322890
259	5	322890
260	5	322890
261	5	322890
262	5	322890
263	5	322890
264	5	322890
265	5	322890
266	1	322895
267		*
268		*
269	SPARE	*
270		*
271		*
272		*
273		*
274		*
275	5	322890
276		*
277		*
278	SPARE	*
279	SPARE	*
280		*
281		*
282		*
283		*
284		*
285	5	322890
286		*
287		*
288	SPARE	*
289	SPARE	*
290	5	322890
291	5	322890
292	5	322890
293	5	322890
294	5	322890
295	5	322890
296	5	322890
297	5	322890
298	5	322890
299	5	322890
300	5	322890
301	5	322890
302	5	322890
303	5	322890
304	5	322890
305	5	322890
306		*
307		*
308	SPARE	*
309	SPARE	*
310		*
311		*
312		*
313		*
314		*
315	5	322890
316		*
317		*
318		*
319		*
320		*
321		*
322		*
323		*
324		*
325	5	322890
326		*
327		*
328		*
329		*
330		*
331		*
332		*
333		*
334		*
335	5	322890
336		*
337		*
338		*
339		*
340		*
341		*
342		*
343		*
344		*
345	5	322890
346	1	322895
347		*
348		*
349	SPARE	*
350		*
351		*
352		*
353		*
354		*
355	5	322890
356		*
357		*
358	SPARE	*
359	SPARE	*
360		*
361		*
362		*
363		*
364		*
365	5	322890
366		*
367		*
368		*
369	SPARE	*
370		*
371		*
372		*
373		*
374		*
375	5	322890
376		*
377		*
378		*
379		*
380		*
381		*
382	SPARE	*
383		*
384	SPARE	*
385	5	322890
386		*
387		*
388	SPARE	*
389	SPARE	*
390	5	322890
391	5	322890
392	5	322890
393	5	322890
394	5	322890
395	5	322890
396	1	322895
397		*
398		*
399	SPARE	*
400		*
401	5	322890
402	10	322889
403		*
404		*
405		*
406		*
407		*
408	SPARE	*
409	SPARE	*

- 322889 (59) DUMMY FUSE

NOTE:
X - PRINT TO ENG SPEC 505081

512723

REFER TO S.F.I.

MATERIAL SPECIFICATION NO.	TOLERANCES UNLESS OTHERWISE NOTED	ALIGNMENT WITHIN	NOTE I
CASE DEPTH	DECIMALS ± .005	CONCENTRIC WITHIN	TOT IND READING NOTE II
HARDNESS	FRACTIONS ± 1/64	FLAT WITHIN	NOTE III
SURFACE TREATMENT	ANGLES ± 2°	PARALLEL WITHIN	NOTE IV
SPEC NO / TECH RESEARCH APPRO DATE	CORNERS MAY BE BROKEN OUTSIDE / INSIDE	STRAIGHT WITHIN	NOTE V
		SQUARE WITHIN IN INCHES	NOTE VI

INTERNATIONAL BUSINESS MACHINES CORP

MACH [illegible] MODEL [illegible]

NAME AC [illegible] FUSE LOCATION CHART [illegible]

DRAW. [illegible] SCALE NONE

CHECK DMC 4-19-55 TRAC

APPRO [illegible] 5-25-55 CHECK

512723

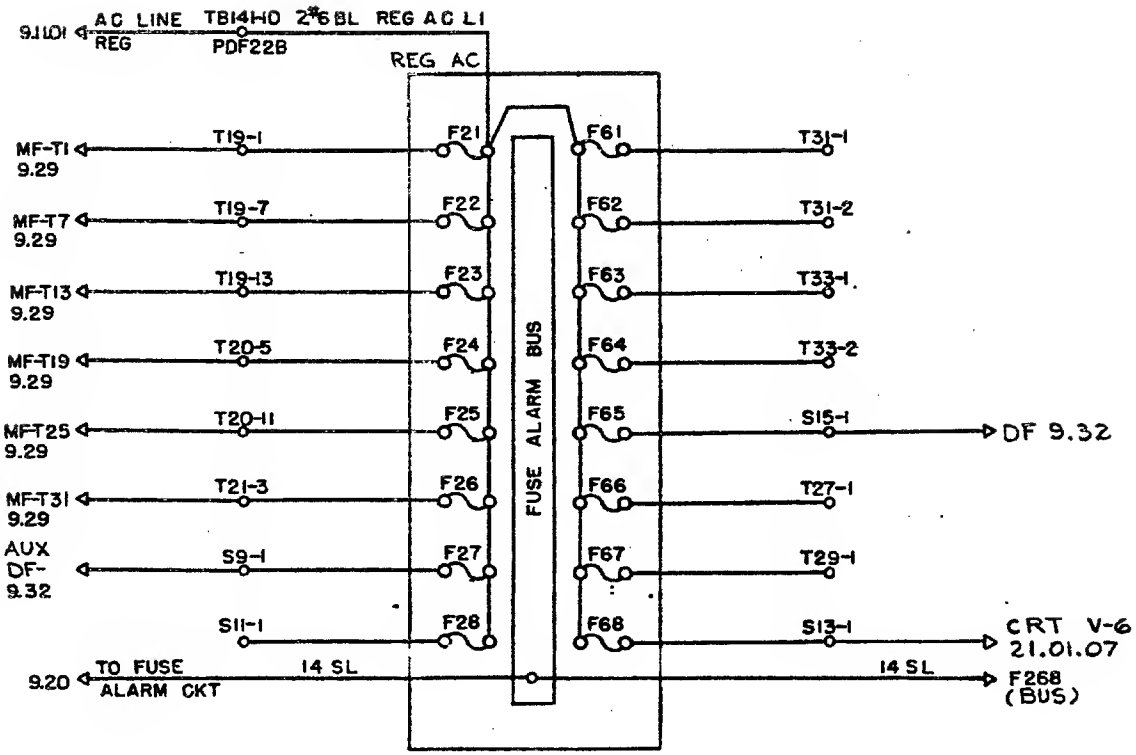

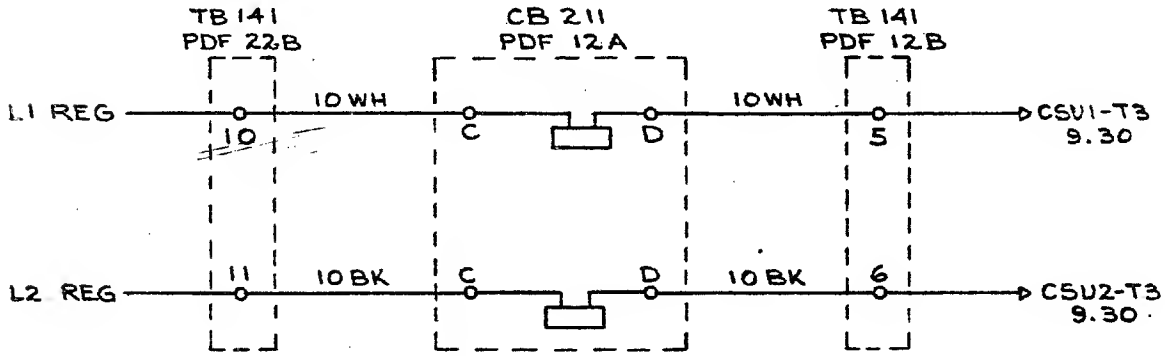

NOTE
X CONTACTS OF CB 211 SHOWN ON 9.23
XI ALL WIRES FROM FUSES TO S&T TERMINALS ARE #18 YEL UNLESS OTHERWISE NOTED.

512717 EC 241913

REG AC FUSING L2

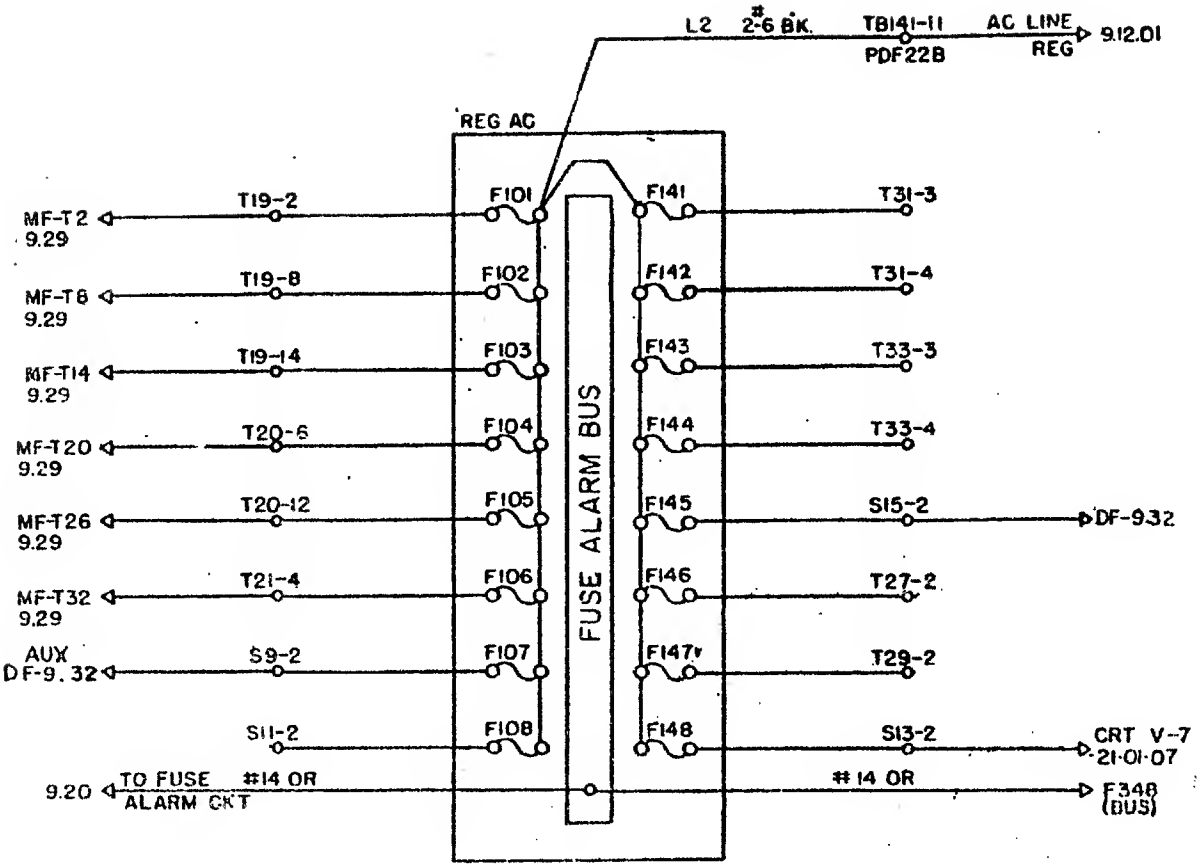

NOTE

X ALL WIRES FROM FUSES TO SBT TERMINALS ARE #18SL UNLESS OTHERWISE NOTED

ED 241913

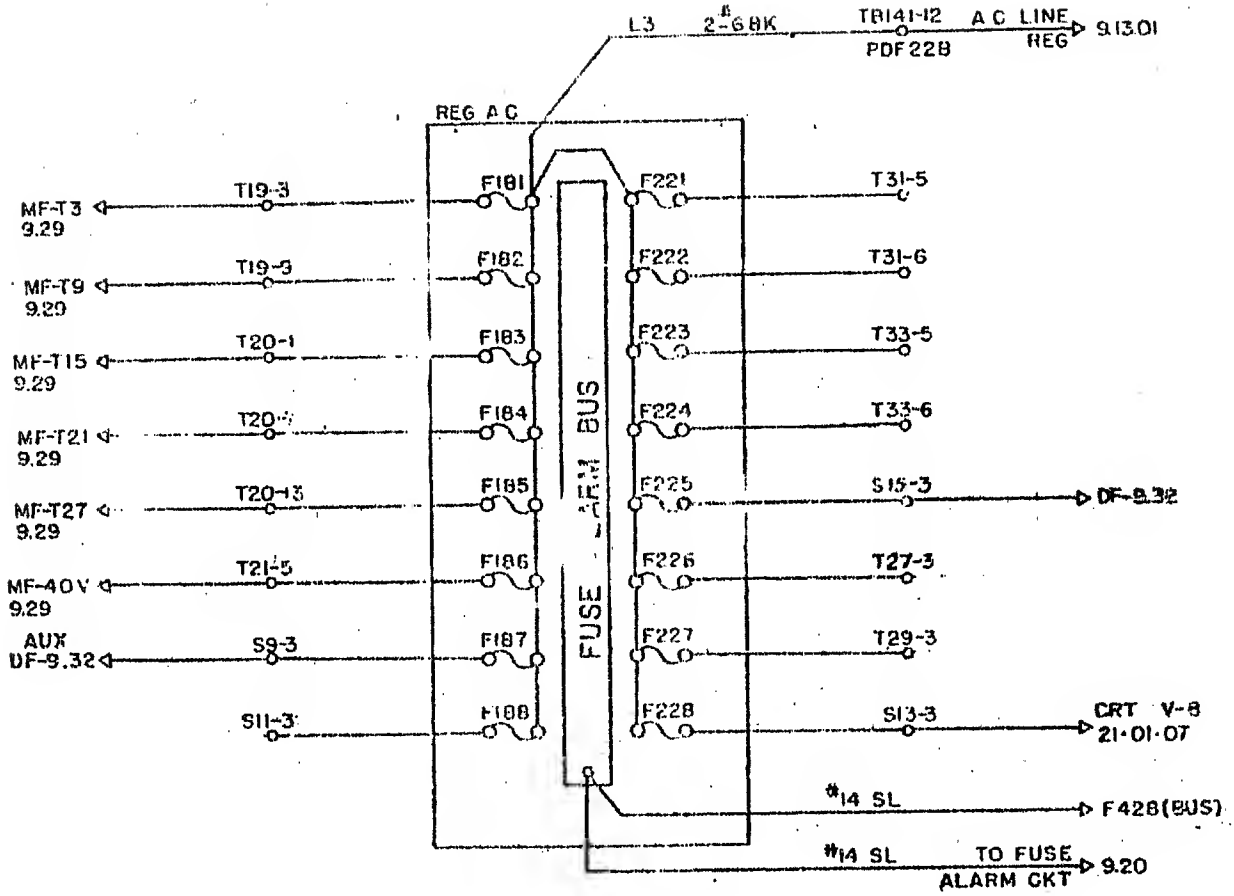

NOTE

X ALL WIRES FROM FUSES TO S&T TERMINALS ARE #18 OR UNLESS OTHERWISE NOTED

812719 E4 241913

REG AC FUSING L1

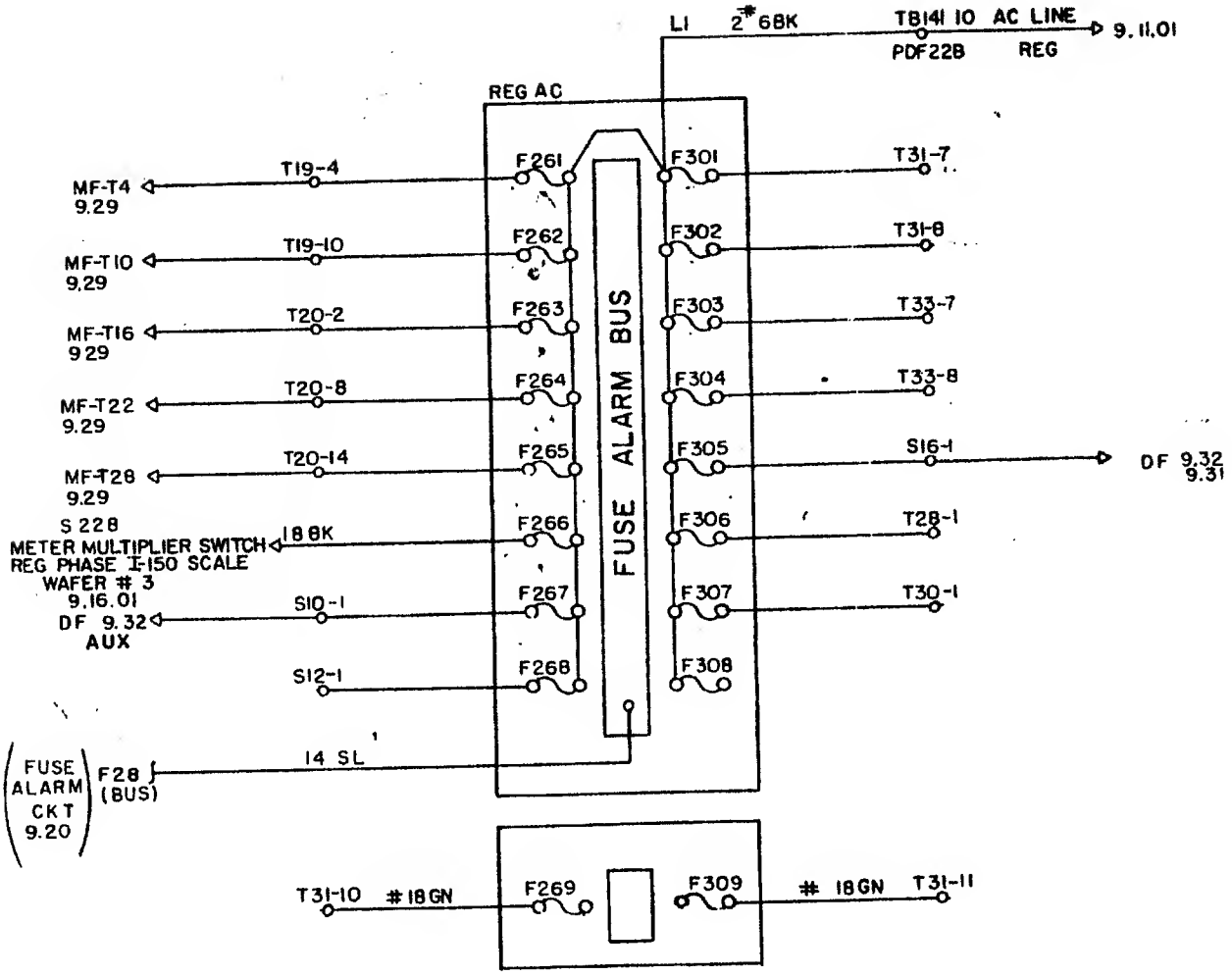

NOTE:
* ALL WIRES FROM FUSES TO S&T TERM ARE #18 BN UNLESS OTHERWISE NOTED

512720 EG 241566

REG AC FUSING L2

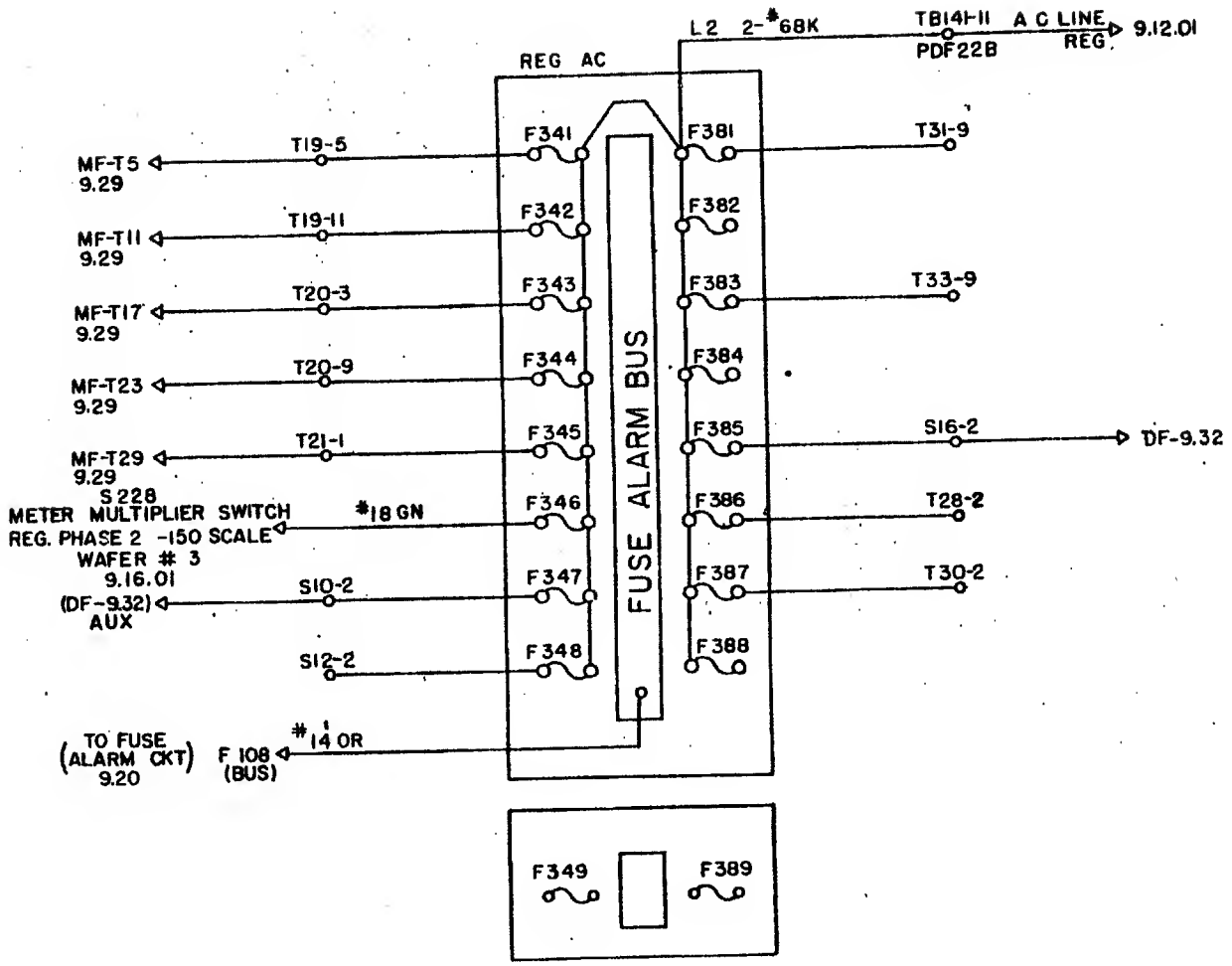

NOTE:
X ALL WIRES FROM FUSES TO S&T TERMINALS ARE #18 YEL UNLESS OTHERWISE NOTED

512721 E.C. 241666

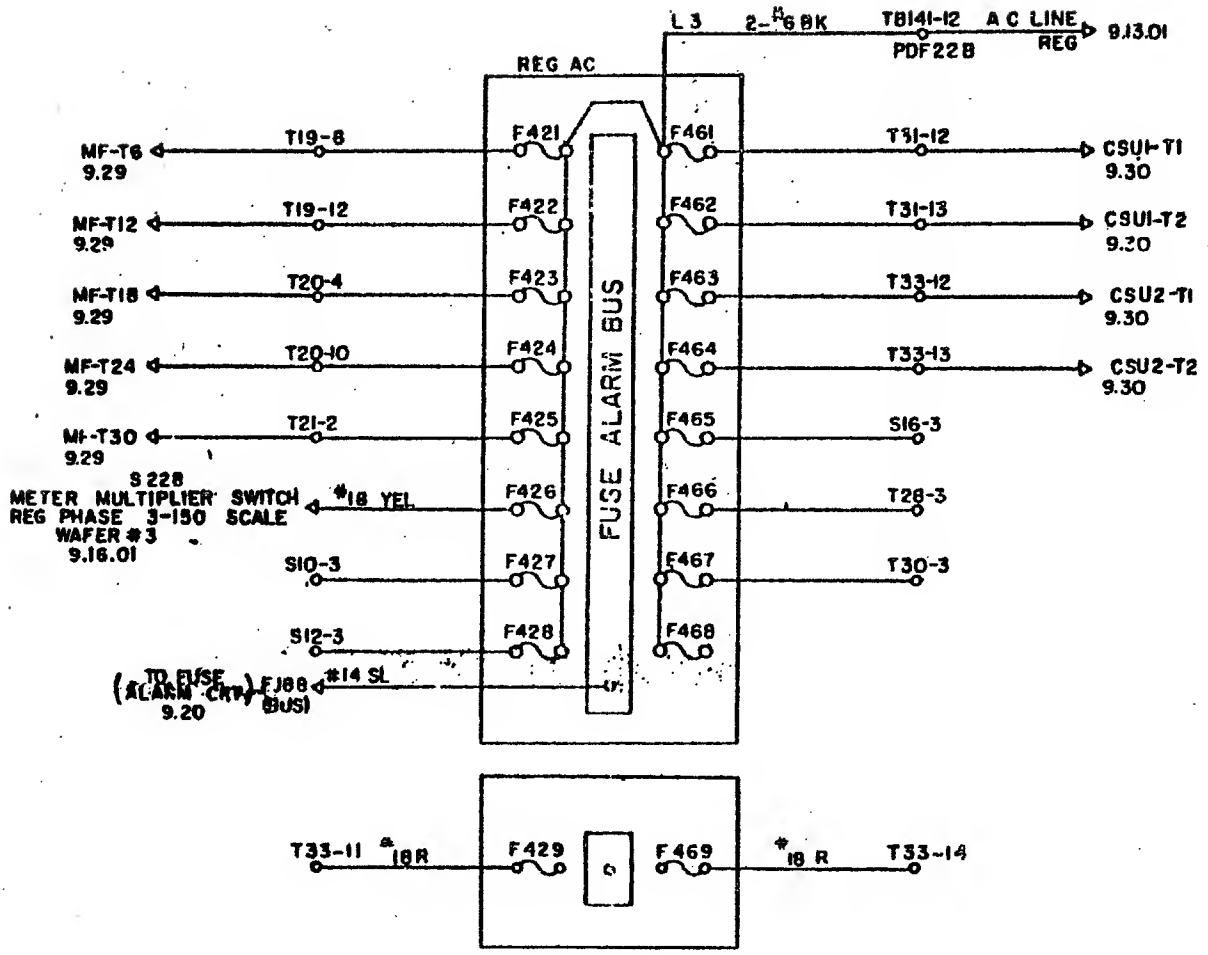

NOTE:

X ALL WIRES FROM FUSES TO S&T TERMINALS ARE #18 SL UNLESS OTHERWISE NOTED

512722 EC 241159

STANDARDS CODE	RELEASED FOR ASSEM	QTY
NONE	303328	

512730

DATE	CHANGE NO.
2-9-55	241153
7-6-55	241350
9-12-55	241666
9-26-55	241771
1-6-56	242270
3-22-56	242456
9-25-56	242[illegible]

NAS 704-3547

AC UNREGULATED FUSE LOCATION CHART

9.19.51

FUSE NO.	AMPS.	PART NO.
29	1	322895
30	15	107670
31		*
32		*
33		*
34		*
35	3.2	322898
36		*
37	1	322895
38	3.2	322898
39	1.6	322896
40	1.6	322896
69	SPARE	*
70	1.6	322896
71		*
72		*
73		*
74		*
75	3.2	322898
76		*
77	1	322895
78	3.2	322898
79	1.6	322896
80	1.6	322896
109	1	322895
110	5	322890
111		*
112		*
113		*
114		*
115	3.2	322898
116		*
117	1	322895
118	3.2	322898
119	1.6	322896
120	1.6	322896
149	SPARE	*
150	SPARE	*
151		*
152		*
153		*
154		*
155	3.2	322898
156		*
157	1	322895
158	3.2	322898

FUSE NO.	AMPS.	PART NO.
159	1.6	322896
160	1.6	322896
189	1	322895
190	SPARE	*
191		*
192		*
193		*
194		*
195	3.2	322898
196		*
197	1	322895
198	3.2	322898
199	1.6	322896
200	1.6	322896
229	SPARE	*
230	SPARE	*
231		*
232		*
233		*
234		*
235	3.2	322898
236		*
237	1	322895
238	3.2	322898
239	1.6	322896
240	1.6	322896
270		*
271		*
272		*
273		*
274		*
275	5	322890
276		*
277	2/10	322780
278	3.2	322898
279	1.6	322896
280	1.6	322896
310		*
311		*
312		*
313		*
314		*
315	5	322890
316	SPARE	*
317	SPARE	*
318	3.2	322898

FUSE NO.	AMPS.	PART NO.
319	15	115971
320	10	322889
350		*
351		*
352		*
353		*
354		*
355	5	322890
356	1	322895
357	1	322895
358	3.2	322898
359	1.6	322896
360	1.6	322896
390		*
391		*
392		*
393		*
394		*
395	5	322890
396	SPARE	*
397	SPARE	*
398	3.2	322898
399	15	115971
400	10	322889
430		*
431		*
432		*
433		*
434		*
435	5	322890
436	SPARE	*
437	2/10	322780
438	3.2	322898
439	1.6	322896
440	1.6	322896
470	5	322890
471		*
472		*
473		*
474		*
475	5	322890
476	SPARE	*
477	SPARE	*
478	3.2	322898
479	15	115971
480	10	322889

* 322088 (73) DUMMY FUSE

512730

NOTE:
* PRINT TO ENG SPEC 895291

REFER TO S.F.I.

MATERIAL SPECIFICATION	NO	TOLERANCES UNLESS OTHERWISE NOTED	ALIGNMENT WITHIN
CASE DEPTH		DECIMALS ± .005	CONCENTRIC WITHIN
HARDNESS		FRACTIONS ± 1/64	FLAT WITHIN
SURFACE TREATMENT	SPEC NO	ANGLES ± 2°	PARALLEL WITHIN
	TECH. RESEARCH	CORNERS WAY BE BROKEN OUTSIDE	STRAIGHT WITHIN
	APPRO. DATE	INSIDE	SQUARE WITHIN

NOTE I
TOT IND READING NOTE II
NOTE III
NOTE IV
NOTE V
IN INCHES NOTE VI

INTERNATIONAL BUSINESS MACHINES CORP

MACH. POWER DISTRIB. TOP
FRAME MODEL 746 MOD.
NAME
DRAWN 5-9-55 SCALE NONE
CHECK 5-9-55 TRAC
APPRO. 5-25-55 DATE

512730

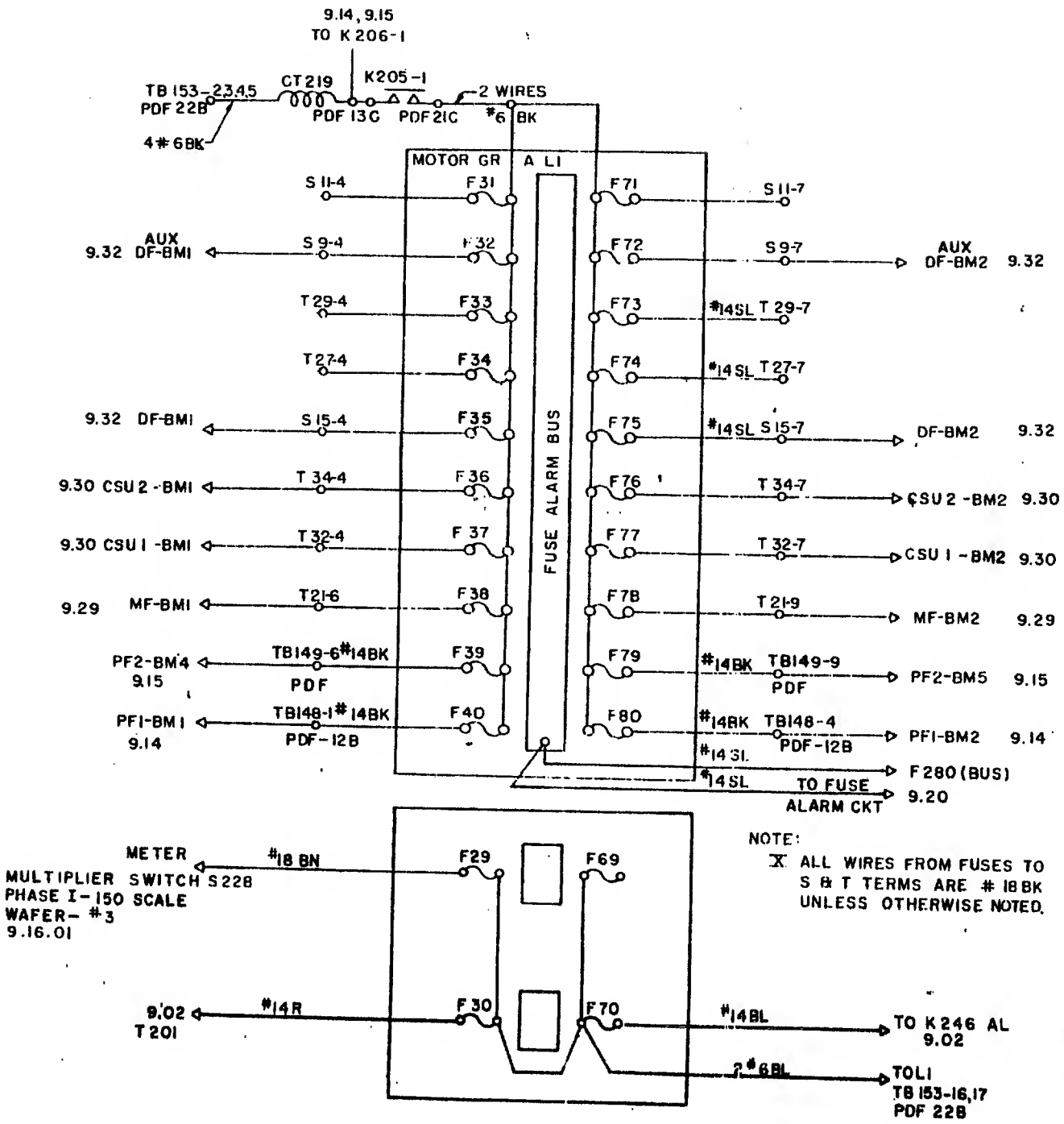

NOTE:
X ALL WIRES FROM FUSES TO S & T TERMS ARE # 18 BK UNLESS OTHERWISE NOTED.

512724 EC 241666

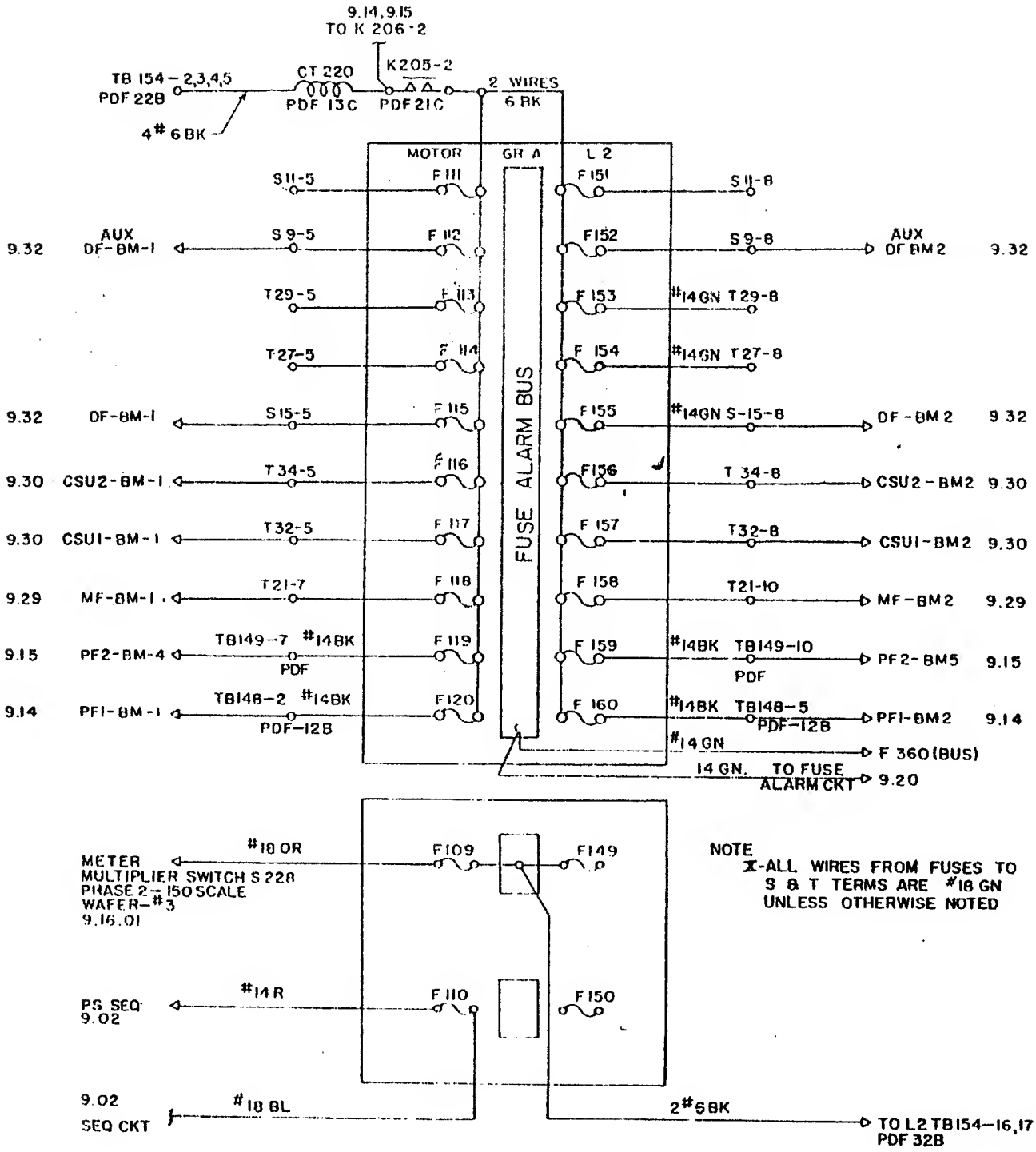
9.14,9.15
TO K 206-2
K205-2
TB 154-2,3,4,5
PDF 22B
CT 220
PDF 13C
PDF 21C
2 WIRES
6 BK
4# 6 BK
MOTOR
GR A
L 2
FUSE ALARM BUS
S11-5
F 111
F 151
S11-8
9.32
AUX
DF-BM-1
S 9-5
F 112
F152
S 9-8
AUX
DF BM2
9.32
T29-5
F 113
F 153
#14GN T29-8
T27-5
F 114
F 154
#14GN T27-8
9.32
DF-BM-1
S15-5
F 115
F 155
#14GN S-15-8
DF-BM 2
9.32
9.30
CSU2-BM-1
T 34-5
F 116
F156
T 34-8
CSU2-BM2
9.30
9.30
CSU1-BM-1
T32-5
F 117
F 157
T32-8
CSU1-BM2
9.30
9.29
MF-BM-1
T21-7
F 118
F 158
T21-10
MF-BM2
9.29
9.15
PF2-BM-4
TB149-7 #14BK
PDF
F 119
F 159
#14BK TB149-10
PDF
PF2-BM5
9.15
9.14
PF1-BM-1
TB148-2 #14BK
PDF-12B
F120
F 160
#14BK TB148-5
PDF-12B
PF1-BM2
9.14
#14 GN
F 360 (BUS)
14 GN. TO FUSE
ALARM CKT
9.20
METER
MULTIPLIER SWITCH S 22B
PHASE 2-150 SCALE
WAFER-#3
9.16.01
#18 OR
F109
F149
NOTE
X-ALL WIRES FROM FUSES TO
S & T TERMS ARE #18 GN
UNLESS OTHERWISE NOTED
PS SEQ
9.02
#14 R
F 110
F 150
9.02
SEQ CKT
#18 BL
2#6BK
TO L2 TB154-16,17
PDF 32B

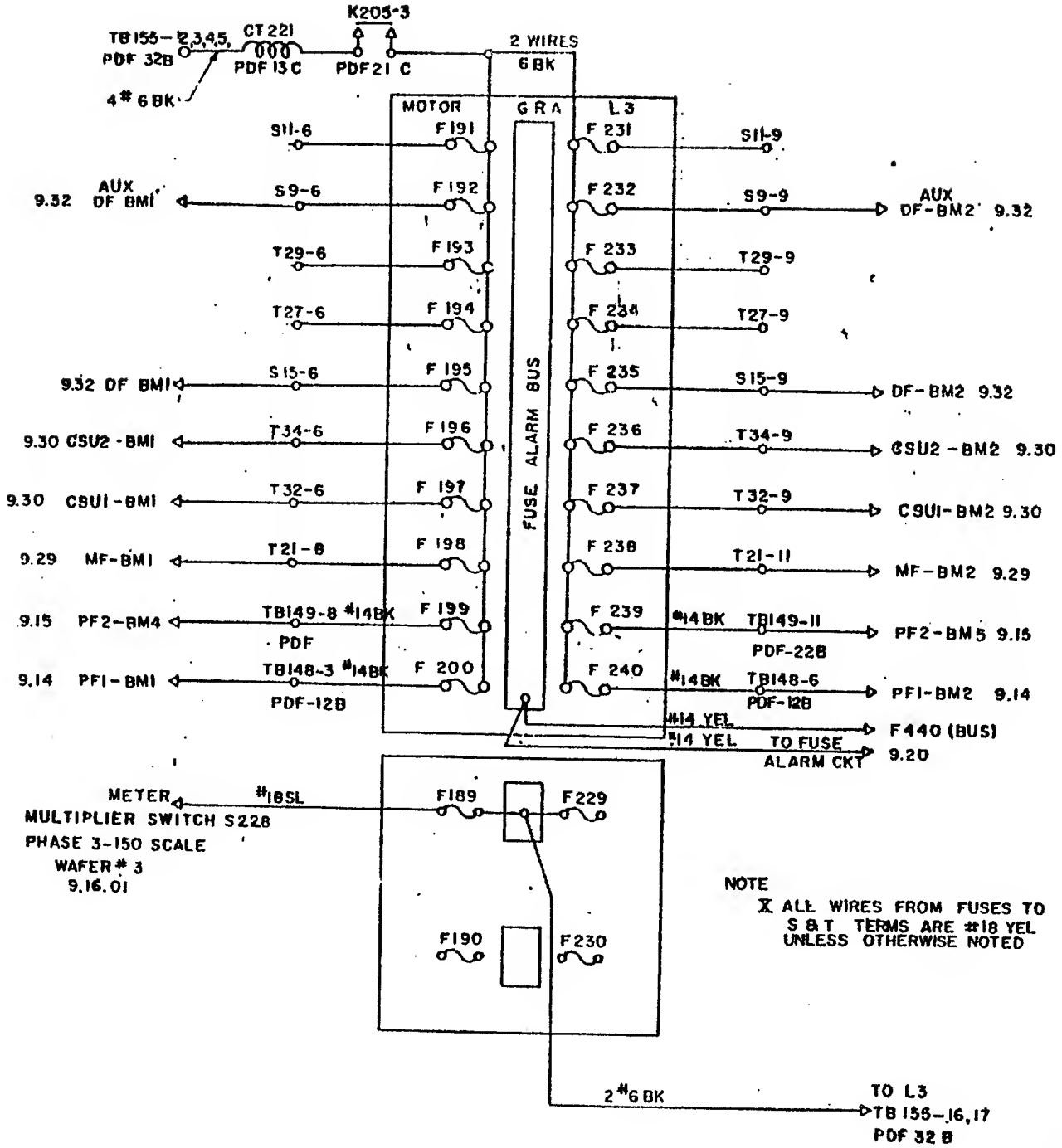

512726 EC 241666

STANDARD CODE	RELEASED PER ASSEMBLY	QTY	
NONE	503629		512727

DATE	CHANGE NO
8-10-61	241759
8-18-61	241646
11-7-61	241819
8-24-62	243195

512727

NOTE: X PRINT TO ENG. SPEC. 895291

UN-REG AC FUSING L-1 MTR GR "B"

9.19

SHEET 4 OF 6

WAS 704-3555

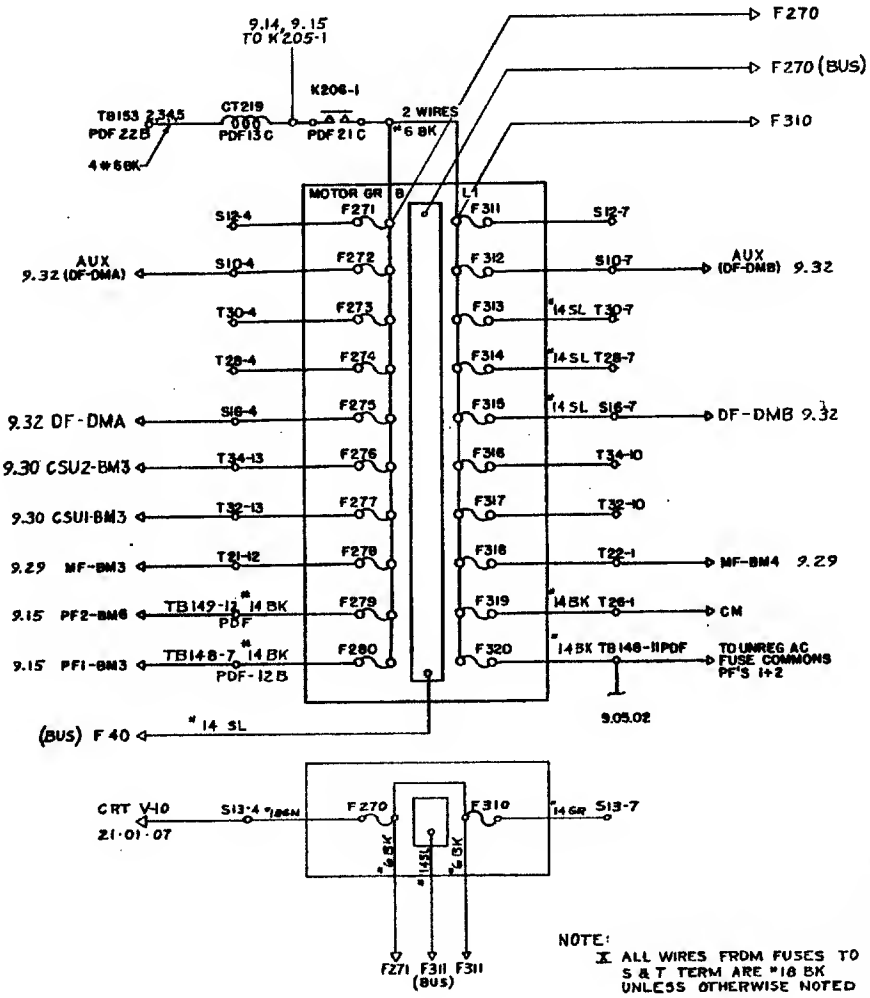

NOTE:
X ALL WIRES FROM FUSES TO S & T TERM ARE #18 BK UNLESS OTHERWISE NOTED

512727 EC 243195

INTERNATIONAL BUSINESS MACHINES CORP.	
BASIC	POWER DISTRIBUTION UNIT
MODEL	746 MODEL 2
NAME	SYSTEMS DIAGRAM
	9.19
DRAWN	R.E.T. 12-16-54
SCALE	NONE
CHECK	
APPROVAL	5-25-55

512727

512728

NOTE: II PRINT TO ENG SPEC 895291

UNREG AC FUSING L-2 MTR GR "B"

9.19

SHEET 5 OF 6

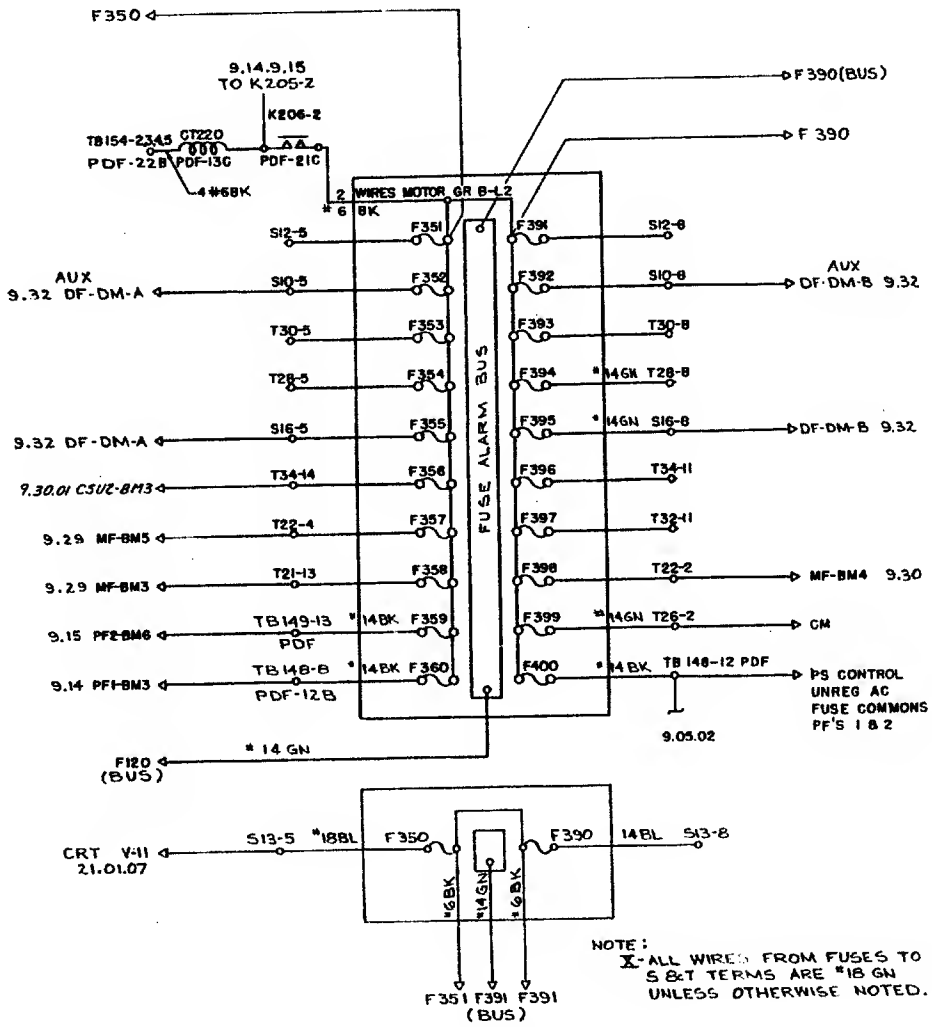

NOTE: X-ALL WIRES FROM FUSES TO S&T TERMS ARE #18 GN UNLESS OTHERWISE NOTED.

512728 EC 243198

WAS 704-3555

STANDARD CODE	RELEASED FOR ASSEMBLY	QTY	512728
NONE	503629		

DATE	CHANGE NO.
6-10-55	241159
8-12-55	241066
10-31-55	241913
9-24-58	243198

INTERNATIONAL BUSINESS MACHINES CORP.

MACH. POWER DISTRIBUTION UNIT MODEL 746MOD 2

NAME SYSTEMS DIAGRAM 9.19

DRAWN REF 1-18-56 SCALE NONE

CHECK TRAC.

APPRO. JC 5-23-55

NOTE I — NOTE II — NOTE III — NOTE IV — NOTE V — NOTE VI — NOTE VII

DIT. ING. READING

ALIGNMENT WITHIN — CONCENTRIC WITHIN — FLAT WITHIN — PARALLEL WITHIN — STRAIGHT WITHIN — SQUARE WITHIN

TOLERANCE UNLESS OTHERWISE NOTED: DECIMALS ± .005 — FRACTIONS ± 1/64 — ANGLES ± 1°

MATERIAL SPECIFICATION — NO. — BASE MATL. — HARDNESS — SURFACE TREATMENT

512728

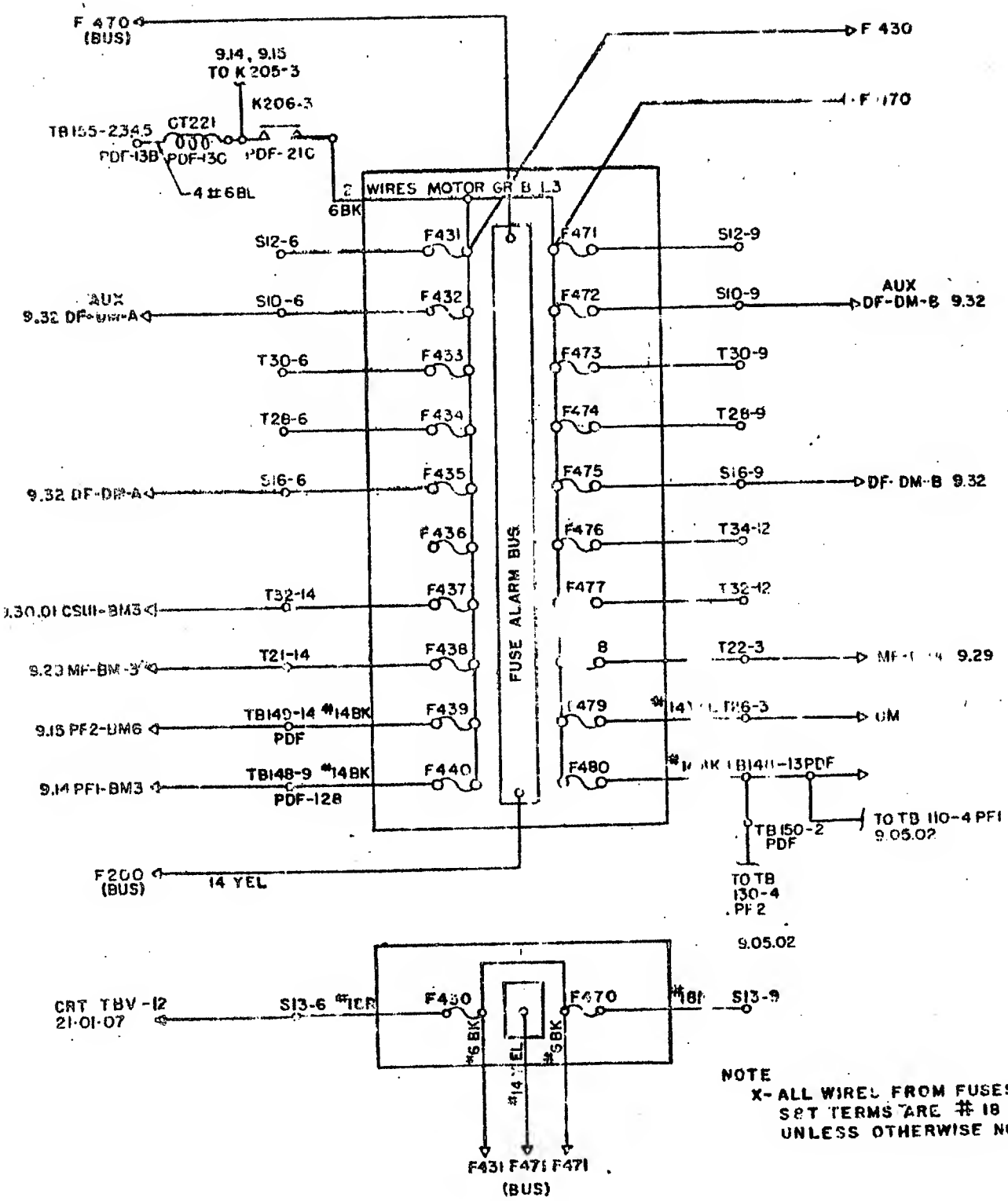

NOTE
X- ALL WIRES FROM FUSES TO SET TERMS ARE # 18 YEL. UNLESS OTHERWISE NOTED

512729 E C 241913

FUSE ALARM CIRCUIT
POWER FRAME 1

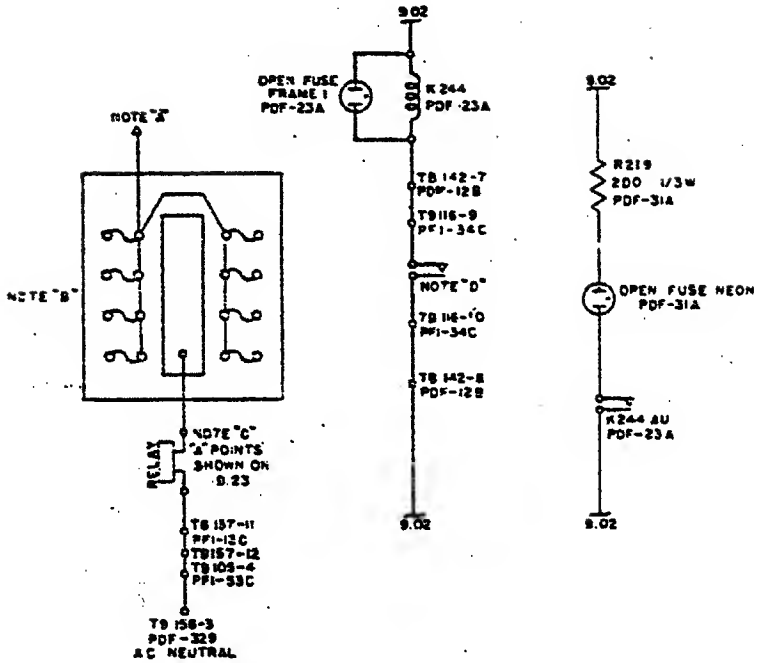

NOTES	UNREG L1	UNREG L2	UNREG L3	REG L1	REG L2	REG L3
"A"	9.25	9.25	9.25	9.24	9.24	9.24
FUSES "B"	725—732 PF1-33C	733—740 PF1-23C	741—748 PF1-23C	701—708 PF1-43C	709—716 PF1-43C	717—724 PF1-33C
RELAYS "C"	K2062 PF1-24C	K2063 PF1-24C	K2064 PF1-24C	K2065 PF1-34C	K2066 PF1-34C	K2067 PF1-34C
RELAY POINTS "D"	K2062B PF1-24C	K2063B PF1-24C	K2064B PF1-24C	K2065B PF1-34C	K2066B PF1-34C	K2067B PF1-34C
FUSE CHART	9.25	9.25	9.25	9.24	9.24	9.24

FUSE ALARM CIRCUIT
POWER FRAME 2

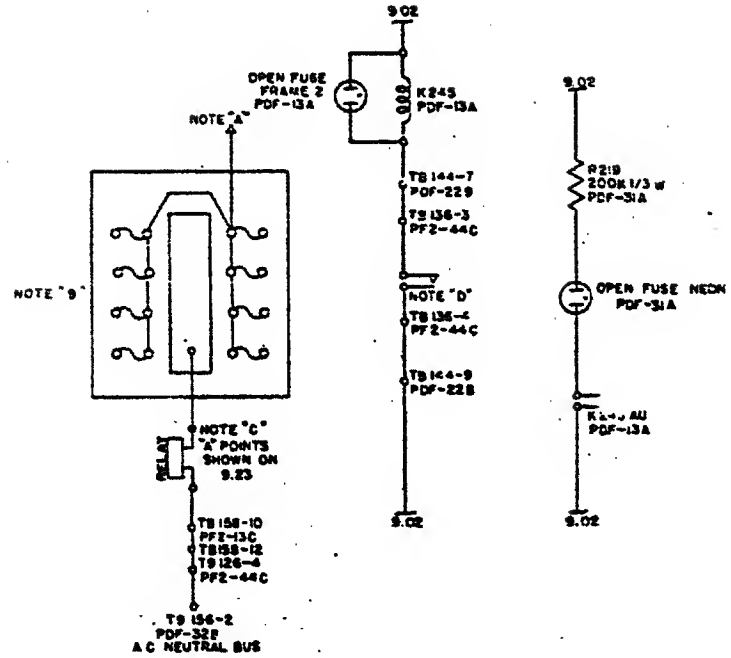

NOTES	UNREG L1	UNREG L2	UNREG L3	REG L1	REG L2	REG L3
"A"	9.27	9.27	9.27	9.26	9.26	9.26
FUSES "B"	825—832 PF2-33C	833—840 PF2-22C	841—848 PF2-22C	801—808 PF2-43C	809—816 PF2-43C	817—824 PF2-33C
RELAYS "C"	K2068 PF2-24C	K2069 PF2-24C	K2070 PF2-24C	K2071 PF2-34C	K2072 PF2-34C	K2073 PF2-34C
RELAY POINTS "D"	K2068B PF2-24C	K2069B PF2-24C	K2070B PF2-24C	K2071B PF2-34C	K2072B PF2-34C	K2073B PF2-34C
FUSE CHART	9.27	9.27	9.27	9.26	9.26	9.26

FUSE ALARM CIRCUIT
MOTOR GROUPS A AND B
POWER DISTRIBUTION FRAME
UNREGULATED A C

FUSE ALARM CIRCUIT
REGULATED AC
POWER DISTRIBUTION FRAME

DC FUSE ALARM CIRCUIT
POWER DISTRIBUTION FRAME

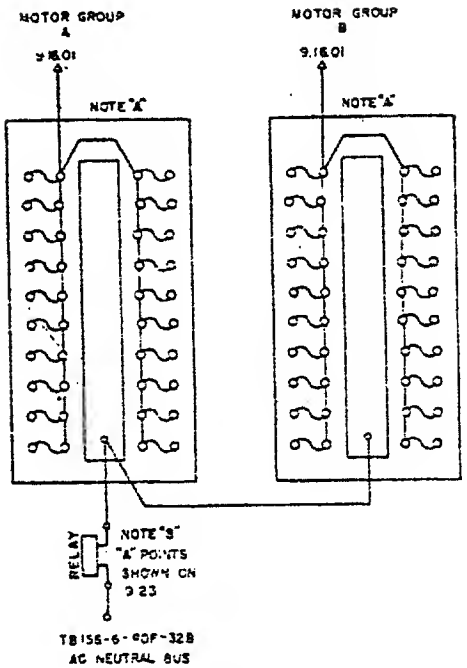

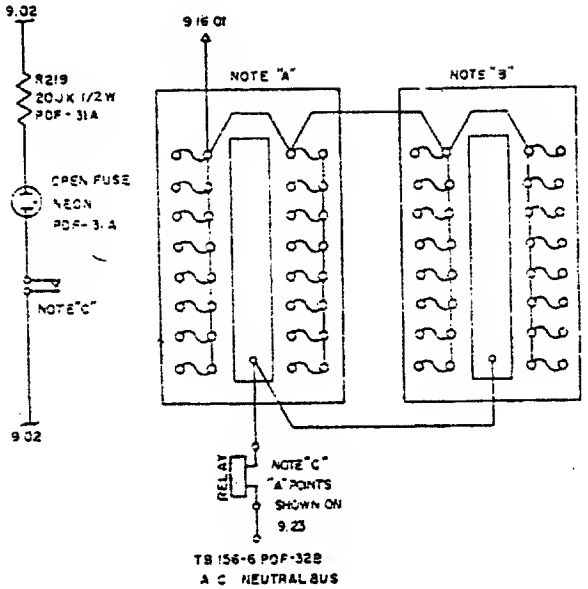

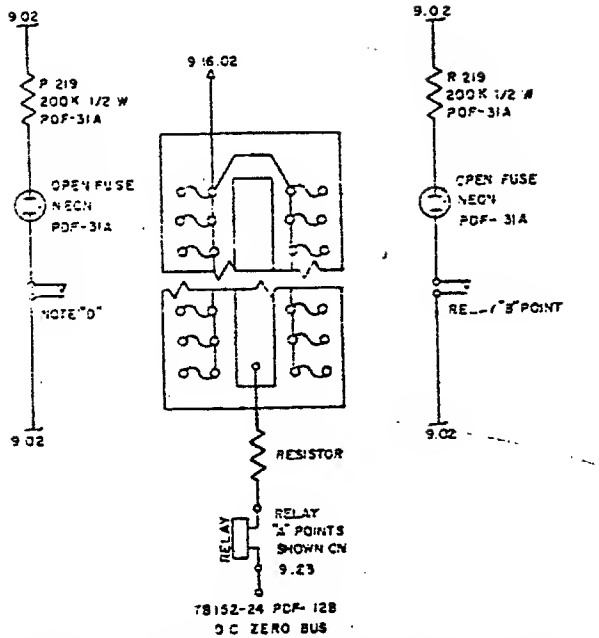

	MOTOR GROUP "A"			MOTOR GROUP B		
NOTES	L1	L2	L3	L1	L2	L3
FUSES NOTE "A"	31→40 71→80 PDF-11B	111→120 151→160 PDF-11B	191→200 231→240 PDF-21B	271→280 311→320 PDF-21B	351→360 391→400 PDF-31B	431→440 471→480 PDF-31B
RELAYS NOTE "B"	K2048 PDF-33A	K2049 PDF-33A	K2050 PDF-33A	K2048 PDF-33A	K2049 PDF-33A	K2050 PDF-33A
RELAY POINTS NOTE "C"	K2048B PDF-33A	K2049B PDF-33A	K2050B PDF-33A	K2048B PDF-33A	K2049B PDF-33A	K2050B PDF-33A
FUSE CHART 9.16	SHEET 1	SHEET 2	SHEET 3	SHEET 4	SHEET 5	SHEET 6

NOTES	L1	L2	L3
FUSES NOTE "A"	21→28 61→68 PDF-11B	101→108 141→148 PDF-11B	181→188 221→228 PDF-21B
FUSES NOTE "B"	261→268 301→308 PDF-21B	341→348 381→388 PDF-31B	421→428 461→468 PDF-31B
RELAYS NOTE "D"	K2051 PDF-33A	K2052 PDF-33A	K2053 PDF-33A
RELAY POINTS NOTE "D"	K2051B PDF-33A	K2052B PDF-33A	K2053B PDF-33A
FUSE CHART 9.16	SHEET 1 & 4	SHEET 2 & 5	SHEET 3 & 6

POWER SUPPLY	FUSES		RESISTOR			RELAY		FUSE CHART 9.16
	NO	LOCATION	NO	RATING	LOCATION	NO	LOCATION	
+130	241→299	PDF-21B	2007	100Ω 10W	PDF-13A	K2060	PDF-13A	SHEET 4
+15	61→219	PDF-31B	—	—	—	K2061	PDF-13A	SHEET 3
-250	401→450	PDF-31B	2004	1500Ω 25W	PDF-23A	K2057	PDF-13A	SHEET 5
+220	→59	PDF-11B	2006	500Ω 25W	PDF-13A	K2058	PDF-13A	SHEET 1
-100	351→370	PDF-31B	2005	500Ω 10W	PDF-13A	K2059	PDF-13A	SHEET 5
+150	81→130	PDF-11B	2003	1000Ω 20W	PDF-23A	K2055	PDF-23A	SHEET 2
-130	130→160	PDF-11B	2002	700Ω 20W	PDF-23A	K2055	PDF-23A	SHEETS 2
-150 CRY	180, 220 260, 300	PDF-21B	2001	1000Ω 20W	PDF-23A	K2054	PDF-23A	SHEETS 3, 4, 5 & 6
	340, 380 420, 460	PDF-31B						

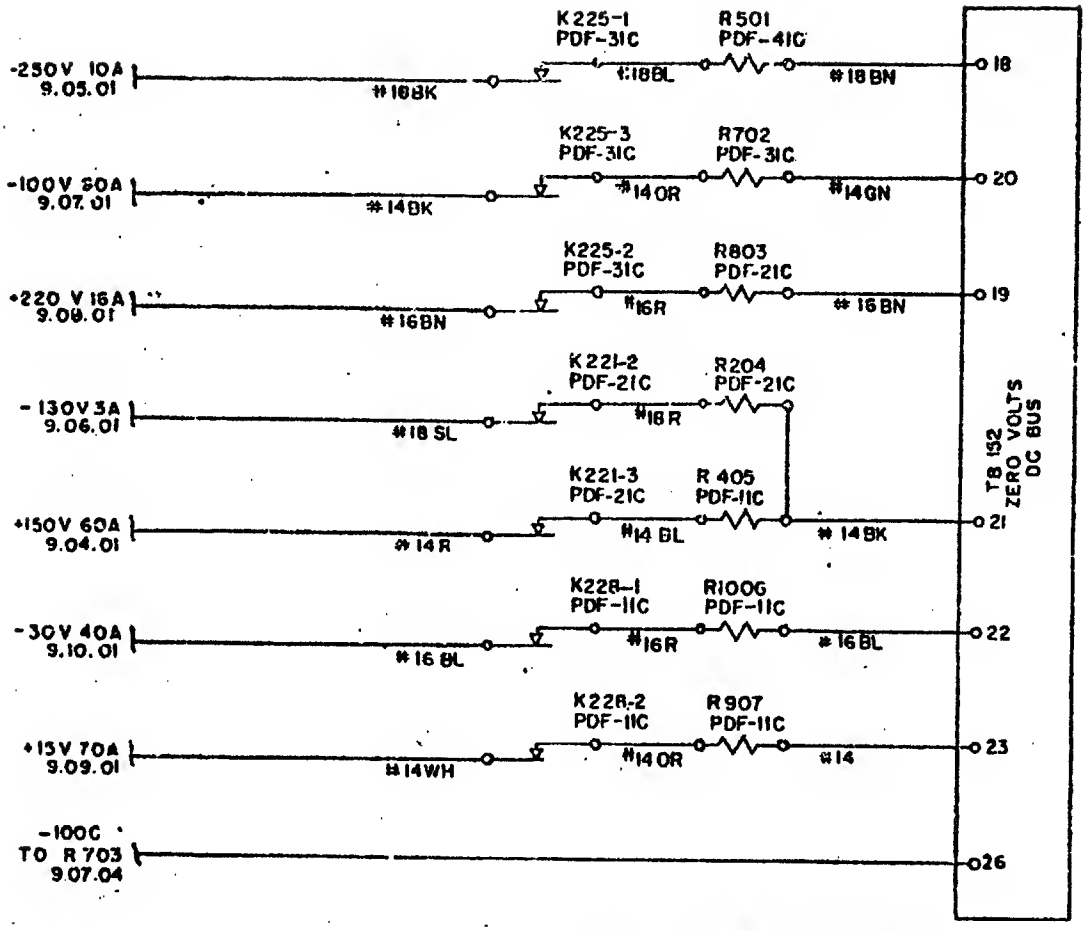

NOTE: COILS OF CONTACTORS
ARE SHOWN ON 9.02

NORMAL OFF & DC OFF INTERLOCK CIRCUITS

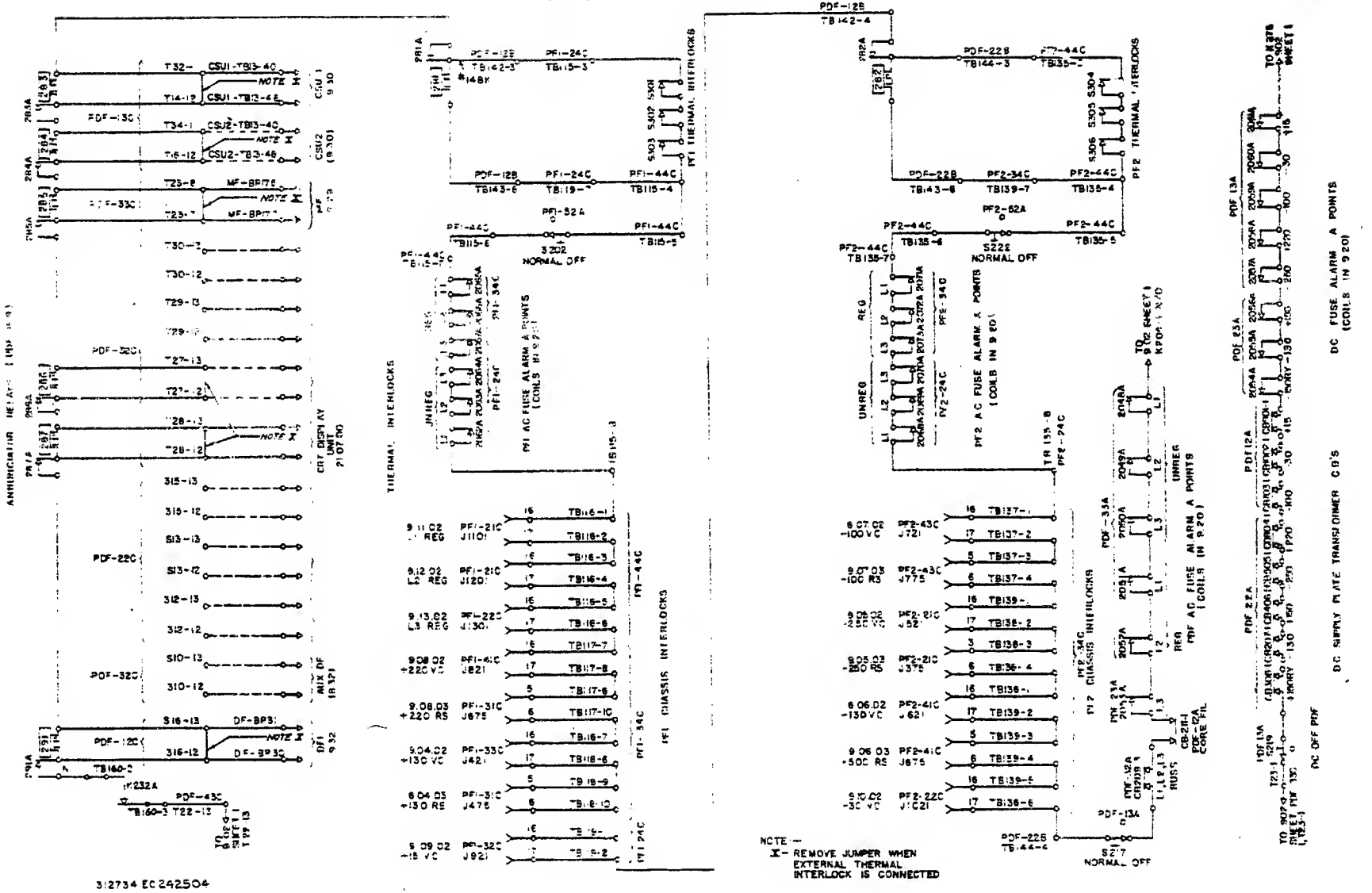

STANDARDS ORDER NO.	RELEASED PROJ. NO.	QTY	
NONE	503629	1	503666

DATE	CHANGE NO.
10-5-55	241848
7-17-56	242988

503666

NOTE
I PRINT TO ENG. SPEC. 895291

REFER TO S.F.I.

WAS 704-3543

PHASE PROTECTION INTERLOCK 9.23.01

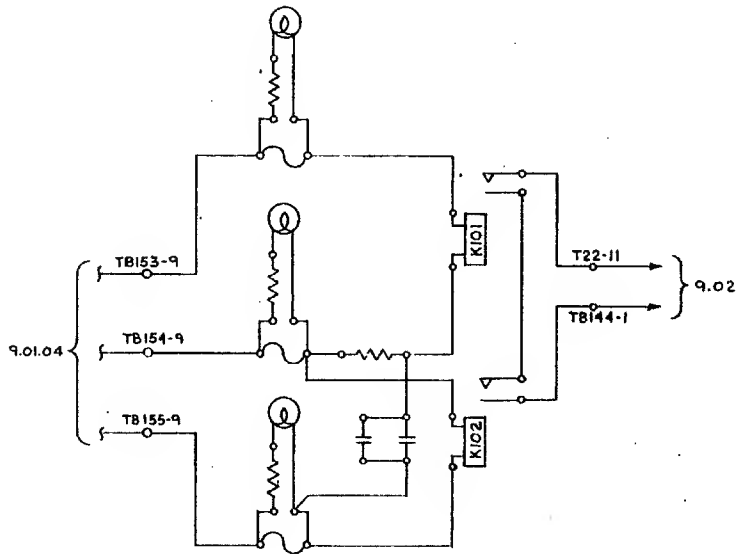

MATERIAL SPECIFICATION	NO	TOLERANCES UNLESS OTHERWISE NOTED	ALIGNMENT WITHIN
		DECIMALS ± .005	CONCENTRIC WITHIN
CASE DEPTH		FRACTIONS ± 1/64	FLAT WITHIN
HARDNESS		ANGLES ± 2°	PARALLEL WITHIN
SURFACE TREATMENT		CONVERT TO BE ENGLISH	STRAIGHT WITHIN
		OUTSIDE	
		INSIDE	SQUARE WITHIN

NOTE I	INTERNATIONAL BUSINESS MACHINES CORP.		
TOT. IND. REQ'MNT NOTE II	MACH.	POWER DISTRIBUTION	MODEL 746
NOTE III	UNIT		
NOTE IV	NAME	SYSTEM DIAGRAM	
		9.23.01	
NOTE V	DRAW	WAS. 9-27-55	SCALE NONE
NOTE VI	CHECK		TRAC.
INCHES	APPRO.	9-27-56	CHECK

503666

503666 EC 242988

REGULATED AC FUSING
FRAME 1

	FUSE NO.	PHYSICAL LOCATION	REFER TO PRINT NO.	AMPS.	PART NO.
L1 FROM TB 106-1, PFI-44C	F701	PFI-43C	9.11.01	10.0	322889
	F702	PFI-43C	9.08.01	5.0	322890
	F703	PFI-43C	9.04.01	5.0	322890
	F704	PFI-43C	9.04.02	0.8	322783
	F705				
	F706	PFI-43C	9.11.02	0.5	322781
	F707	PFI-43C	9.11.02	0.2	322780
	F708	PFI-43C	9.11.02	2.0	322784
L2 FROM TB 106-2, PFI-44C	F709	PFI-43C	9.12.01	10.0	322889
	F710	PFI-43C	9.04.01	5.0	322890
	F711	PFI-43C.	9.09.02	0.5	322781
	F712	PFI-43C	9.12.02	0.5	322781
	F713				
	F714	PFI-33C	9.12.02	0.2	322780
	F715	PFI-33C	9.12.02	2.0	322784
	F716	PFI-33C	9.08.03	0.6	322782
L3 FROM TB 106-3, PFI-44C	F717	PFI-33C	9.07.02, 9.13.01	10.0	322889
	F718	PFI-33C	9.04.01	5.0	322890
	F719	PFI-33C	9.08.02	0.8	322783
	F720	PFI-33C	9.13.02	0.5	322781
	F721	PFI-33C	9.09.02	0.8	322783
	F722	PFI-33C	9.13.02	0.2	322780
	F723	PFI-33C	9.04.03	0.6	322782
	F724	PFI-33C	9.13.02	2.0	322784

NOTE:

ALL FUSES ARE INDICATOR FUSETRON TYPE.
FUSE ALARM CIRCUIT IS SHOWN ON 9.20

512735 EC 241159

UNREGULATED AC FUSING
FRAME 1

	FUSE NO.	PHYSICAL LOCATION	REFER TO PRINT NO.	AMPS.	PART. NO.
L1 FROM TB 110-2, PFI-34C	F725				
	F726				
	F727	PFI-33C	9.08.02	0.2	322780
	F728	PFI-33C	9.04.02	0.1	322779
	F729				
	F730	PFI-33C	9.08.03	0.8	322783
	F731	PFI-33C	9.09.02	0.5	322781
	F732				
L2 FROM TB 110-3, PFI-34C	F733				
	F734				
	F735	PFI-23C	9.04.02	0.1	322779
	F736	PFI-23C	9.08.03	0.8	322783
	F737				
	F738	PFI-23C	9.04.03	0.8	322783
	F739	PFI-23C	9.09.02	0.5	322781
	F740				
L3 FROM TB 110-4, PFI-34C	F741				
	F742	PFI-23C	9.08.02	0.2	322780
	F743	PFI-23C	9.04.02	0.1	322779
	F744	PFI-23C	9.04.03	0.8	322783
	F745				
	F746				
	F747				
	F748				

NOTE:

ALL FUSES ARE INDICATOR FUSETRON TYPE.
FUSE ALARM CIRCUIT IS SHOWN ON 9.20

512736 EC 241159

	FUSE NO	PHYSICAL LOCATION	REFER TO SHEET NO.	AMPS.	PART NO.
L1 FROM TB 126-1, PF2-44C	F801				
	F802	PF2-43C	9.05.01	5.0	322890
	F803	PF2-43C	9.07.01	5.0	322890
	F804	PF2-43C	9.05.02	0.8	322783
	F805				
	F806				
	F807	PF2-43C	9.05.03	0.6	322782
	F808				
L2 FROM TB 126-2, PF2-44C	F809				
	F810				
	F811	PF2-43C	9.07.01	5.0	322890
	F812	PF2-43C	9.06.02	0.8	322783
	F813				
	F814				
	F815	PF2-43C	9.10.02	0.6	322782
	F816				
L3 FROM TB 126-3, PF2-44C	F817				
	F818	PF2-33C	9.07.01	5.0	322890
	F819	PF2-33C	9.03	3.2	322898
	F820	PF2-33C	9.07.02	0.8	322783
	F821	PF2-33C	9.10.02	0.8	322783
	F822	PF2-33C	9.07.03	0.6	322782
	F823				
	F824				

NOTE:

ALL FUSES ARE INDICATOR FUSETRON TYPE.
FUSE ALARM CIRCUIT IS SHOWN ON 9.20

REGULATED AC FUSING
FRAME 2

512737 EC 241159

	FUSE NO.	PHYSICAL LOCATION	REFER TO SHEET NO.	AMPS.	PART NO.
	F825	PF2-33C	9.06.02	0.5	322781
L1 FROM TB130-2, PF2-34C	F826	PF2-33C	9.05.02	0.2	322780
	F827	PF2-33C	9.07.02	0.1	322779
	F828	PF2-33C	9.05.03	0.8	322783
	F829				
	F830	PF2-33C	9.06.03	0.8	322783
	F831				
	F832	PF2-33C	9.10.02	0.5	322781
	F833	PF2-23C	9.06.02	0.5	322781
L2 FROM TB130-3, PF2-34C	F834	PF2-23C	9.05.02	0.2	322780
	F835				
	F836	PF2-23C	9.07.02	0.1	322779
	F837				
	F838				
	F839	PF2-23C	9.07.03	0.8	322783
	F840				
	F841				
L3 FROM TB130-4, PF2-34C	F842				
	F843	PF2-23C	9.07.02	0.1	322779
	F844	PF2-23C	9.05.03	0.8	322783
	F845				
	F846	PF2-23C	9.07.03	0.8	322783
	F847				
	F848	PF2-23C	9.10.02	0.5	322781

NOTE:

ALL FUSES ARE INDICATOR FUSETRON. TYPE.
FUSE ALARM CIRCUIT IS SHOWN ON 9.20

UNREGULATED AC FUSING
FRAME 2

9.27

512738 EC 241159

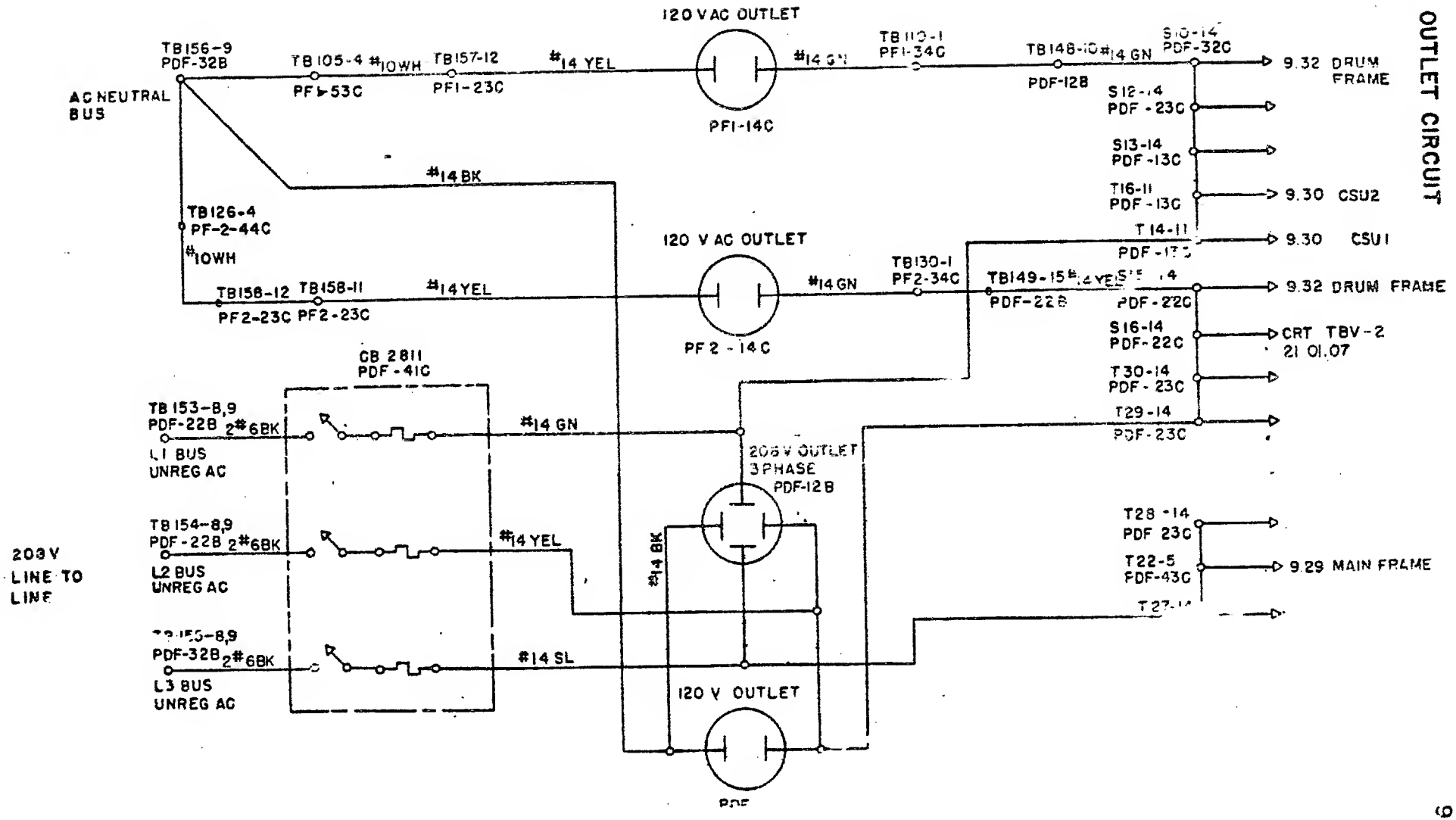

512739 EC 891813

9.29 SHEET 1 OF 5

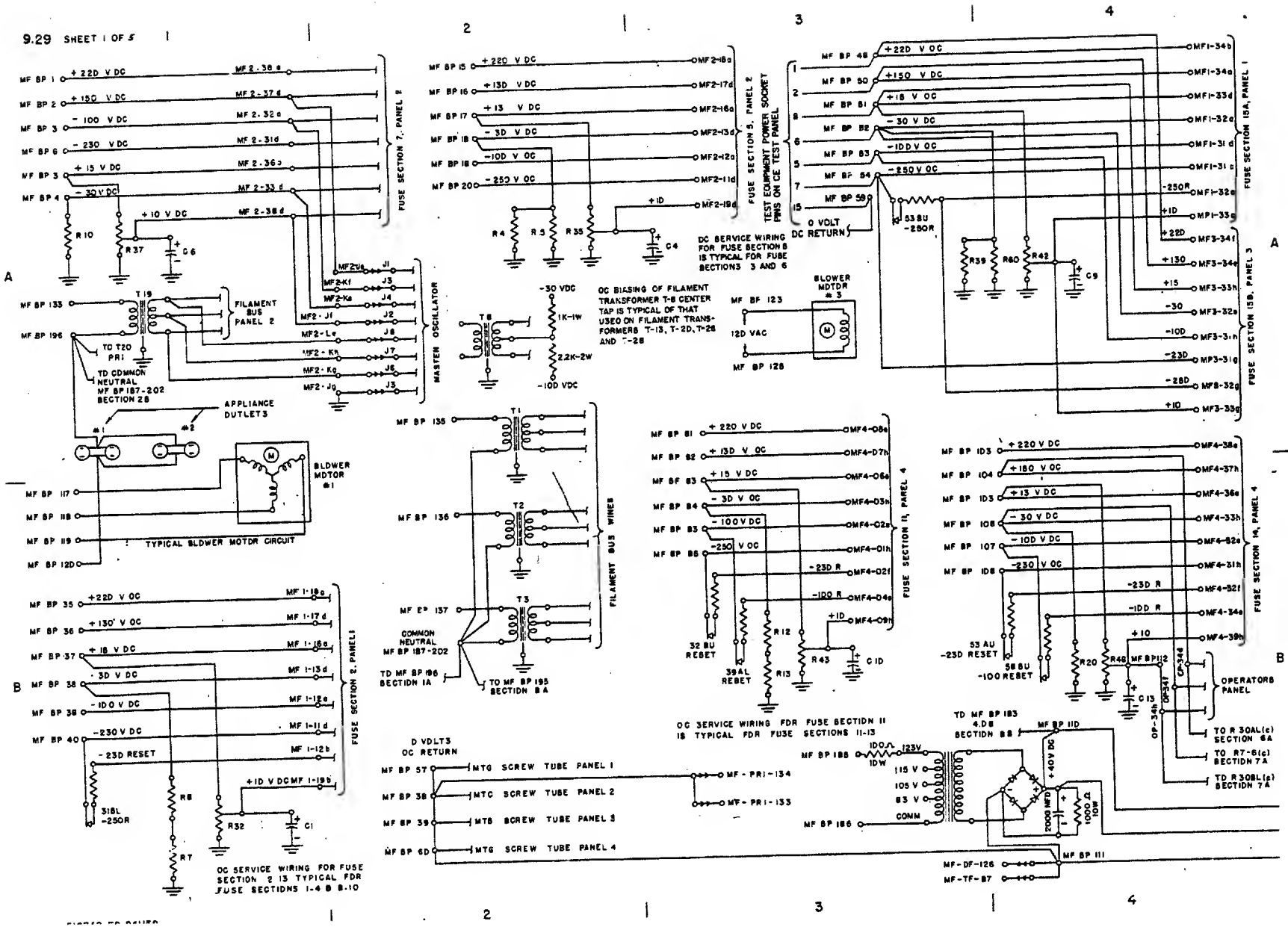

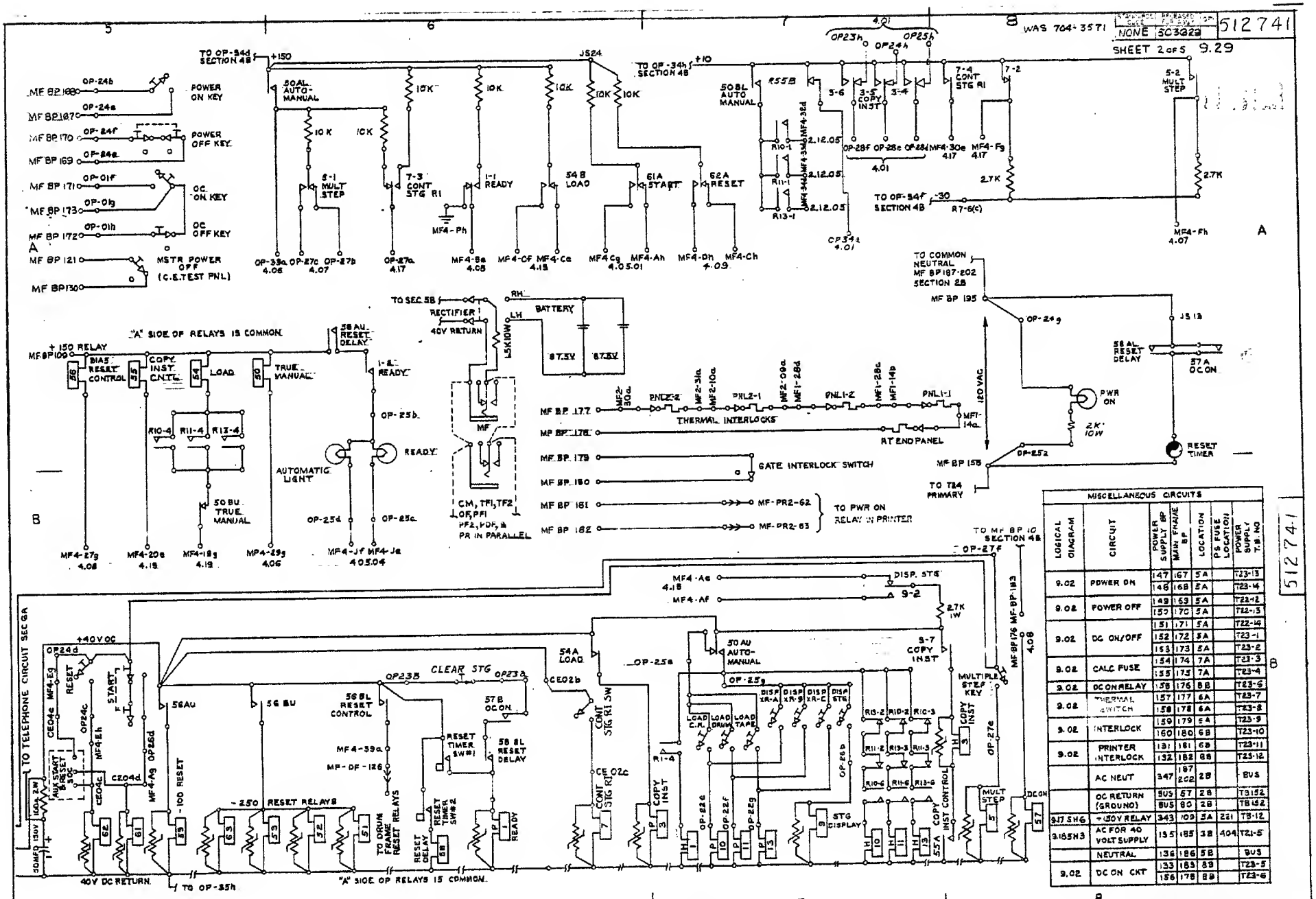

MISCELLANEOUS CIRCUITS							
LOGICAL DIAGRAM	CIRCUIT	POWER SUPPLY BP	MAIN FRAME BP	LOCATION	PS FUSE LOCATION	POWER SUPPLY T.B. NO	
9.02	POWER ON	147	167	5A		T23-13	
		146	168	5A		T23-14	
9.02	POWER OFF	149	169	5A		T22-12	
		150	170	5A		T22-13	
9.02	DC ON/OFF	151	171	5A		T22-14	
		152	172	5A		T23-1	
		153	173	5A		T23-2	
9.02	CALC FUSE	154	174	7A		T23-3	B
		155	175	7A		T23-4	
9.02	DC ON RELAY	158	176	8B		T23-5	
9.02	THERMAL SWITCH	157	177	6A		T23-7	
		158	178	6A		T23-8	
9.02	INTERLOCK	159	179	6A		T23-9	
		160	180	6B		T23-10	
9.02	PRINTER INTERLOCK	131	181	6B		T23-11	
		132	182	6B		T23-12	
	AC NEUT	347	187 202	2B		BUS	
	DC RETURN (GROUND)	BUS	67	2B		T3152	
		BUS	80	2B		T8152	
9.17 SH6	+150V RELAY	343	109	5A	221	T8-12	
9.185H3	AC FOR 40 VOLT SUPPLY	135	185	3B	404	T21-5	
	NEUTRAL	136	186	5B		BUS	
9.02	DC ON CKT	133	183	8B		T23-5	
		156	178	8B		T23-6	

512741

NOTE
PRINT TO ENG SPEC
895291

SYM	DATE	CHANGE NO
SEE INDEX CARD		
	12-27-56	242424
	8-7-58	247921
	9-18-58	243045

INTERNATIONAL BUSINESS MACHINES CORP.
NAME SYSTEM DIAGRAM
9.29
DES DRTMS 3-9-55 MODEL 704
DETAIL SCALE
CHECK 5-2-55 DRAW DCM 5-11-55
APPROV 6-7-55 CHECK WAL 5-11-55

512741

LOGICAL DIAGRAM 9.18	SHT1	SHT2	SHT3	SHT4	SHT5	SHT6	SHT1	SHT2	SHT3	SHT4	SHT5	SHT6	SHT1	SHT2	SHT3	SHT4	SHT5	SHT6	SHT1	SHT2	SHT3	SHT4	SHT5	SHT6	SHT1	SHT2	SHT3	SHT4	SHT5	SHT6	SHT1	SHT2
TRANSFORMER	1	2	3	4	5	6	7	8	9	10	11	12	13	14	15	16	17	18	19	20	21	22	23	24	25	26	27	28	29	30	31	32
POWER SUPPLY FUSE LOCATION	F21	F101	F181	F261	F341	F421	F22	F102	F182	F262	F342	F422	F23	F103	F183	F263	F343	F423	F24	F104	F184	F264	F344	F424	F25	F105	F185	F265	F345	F425	F26	F106
POWER SUPPLY BINDING POST	T19-1	T19-2	T19-3	T19-4	T19-5	T19-6	T19-7	T19-8	T19-9	T19-10	T19-11	T19-12	T19-13	T19-14	T20-1	T20-2	T20-3	T20-4	T20-5	T20-6	T20-7	T20-8	T20-9	T20-10	T20-11	T20-12	T20-13	T20-14	T21-1	T21-2	T21-3	T21-4
MAIN FRAME BINDING POST	135	136	137	138	139	140	141	142	143	144	145	146	147	148	149	150	151	152	153	154	155	156	157	158	159	160	161	162	163	164	165	166
MAIN FRAME NEUTRAL BINDING POST	187	187	188	188	189	189	190	190	191	191	192	192	193	193	194	194	195	195	196	196	197	197	196	198	199	199	200	200	201	201	202	202

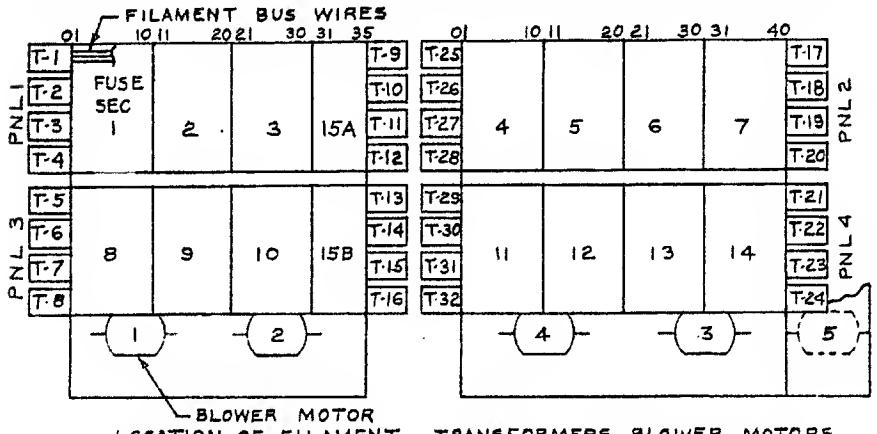

LOCATION OF FILAMENT TRANSFORMERS, BLOWER MOTORS & FUSE SECTIONS FROM WIRING SIDE OF TUBE PANELS

NOTE
N INDICATES NEUTRAL
IN 208V 3 ϕ
4 WIRE SYSTEM

LOGICAL DIAGRAM	BLOWER MOTOR	POWER SUPPLY FUSE LOCATION	POWER SUPPLY BINDING POST	MAIN FRAME BINDING POST
9.19 SHT1	1	F38	T21-6	117
9.19 SHT2		F118	T21-7	118
9.19 SHT3		F198	T21-8	119
9.19 SHT1	2	F78	T21-9	122
9.19 SHT2		F158	T21-10	123
9.19 SHT3		F238	T21-11	124
9.19 SHT4	3	F278	T21-12	127
9.19 SHT5		F358	T21-13	128
9.19 SHT6		F438	T21-14	129
9.19 SHT4	4	F318	T22-1	131
9.19 SHT5		F398	T22-2	132
9.19 SHT6		F478	T22-3	133
9.19	5	F357	T22-4	125
			N BUS	126
9.18	40V SUPPLY		T21-5	185
		F186	N BUS	186
			T22-5	

DUO RELAYS														
NO	DIAGRAM	50	51	52	53	54	55	56	57	58	59	61	62	63
PU	WIRING	5A	6B	6B	5B	5A	5A	5A	8B	6B	5B	5B	5B	5B
	LOGICAL	4.06	4.10	4.10	4.10	4.19	4.19	4.08	4.08	4.08	4.10	4.05.04	4.09	4.10
AU	WIRING	7B	NS	NS	4B			5B		6A	NS			NS
	LOGICAL	4.18	4.10	4.10	4.10			4.10		4.05.04	4.10			4.10
AL	WIRING	6A	NS	NS	NS	6B	7B	5B	8A	8A	3B	6A	7A	NS
	LOGICAL	4.06	4.10	4.10	4.10	4.19	4.19	4.10	4.08	4.08	4.10	4.05.04	4.09	4.10
BU	WIRING	5B	NS	3B	3A			5B			4B			NS
	LOGICAL	4.19	4.10	4.10	4.10			4.10			4.10			4.10
BL	WIRING	7A	1B	NS	NS	6A	7A	6B	6B	6B	NS			
	LOGICAL	4.06	4.10	4.10	4.10	4.19	4.01	4.10	4.08	4.08	4.10			
NAME		AUTOMATIC/ MANUAL	-250 RESET	-250 RESET	-250 RESET	LOAD	COPY INST CONTROL	RESET CONTROL	DC ON	RESET DELAY	-100 RESET	START	RESET	-250 RESET
TYPE		S	S	S	S	S	S	S	S	S	S	S	S	S
PART NO		282745	281077	281077	281077	111401	111401	206672	111351	121841	281077	111351	111351	281077

WIRE CONTACT RELAYS										
NO	DIAGRAM	1	2	5	6	7	9	10	11	13
PU	WIRING	6B	7B	7B		6B	7B	7B	7B	7B
	LOGICAL	4.08	4.19	4.07		4.24	4.18	4.19	4.19	4.19
H	WIRING	7B	7B					7B	7B	7B
	LOGICAL	4.08	4.19					4.21	4.21	4.21
1	WIRING	6A		6A				7A	7A	7A
	LOGICAL	4.08		4.07				4.21	4.21	4.21
2	WIRING	6A		8A		8A	7B	7B	7B	7B
	LOGICAL	4.05.04		4.07		4.17	4.18	4.21	4.21	4.21
3	WIRING					6A		7B	7B	7B
	LOGICAL					4.17		4.21	4.21	4.21
4	WIRING	7B	7A			8A		5A	5A	5A
	LOGICAL	4.08	4.01			4.17		4.19	4.19	4.19
5	WIRING		7A					NS	NS	NS
	LOGICAL		4.01					4.19	4.19	4.19
6	WIRING		7A					7B	7B	7B
	LOGICAL		4.01					4.21	4.21	4.21
7	WIRING		7B							
	LOGICAL		4.19							
8	WIRING									
	LOGICAL									
9	WIRING									
	LOGICAL									
10	WIRING									
	LOGICAL									
11	WIRING									
	LOGICAL									
12	WIRING									
	LOGICAL									
NAME		PWR ON RESET	COPY INST	MULTIPLE STEP		CONT STG R1	STG DISPLAY	DISPLAY XR "A"	DISPLAY XR "B"	DISPLAY XR "C"
SIZE		4	12	4		6	4	6	6	6
TYPE		S	D	S		D		D	D	D
PART NO		196208	196187	196206		196197	196206	196197	196197	196197

SHEET 3 of 5

9.29

512742 EC 242496

512743

LOGICAL DIAGRAM SHT	FUSE SECTION	VOLTAGE	POWER SUPPLY FUSE LOCATION	POWER SUPPLY BINDING POST	MAIN FRAME BINDING POST	MAIN FRAME PANEL EDGE CONNECTOR	RESET RELAY POINT	CAPACITOR	BLEEDER RESISTOR
SHT 1	1	220	F1	T1-1	43	1-08a			
SHT 2		150	F81	T1-2	44	1-07a			
SHT 3		15	F161	T1-3	45	1-06a			39
		10				1-09a		14	39
SHT 4		-30	F241	T1-4	46	1-03a			46 & 1 SERIES
SHT 5		-100	F321	T1-5	47	1-02a			
SHT 6		-250	F401	T1-6	48	1-01a			
		-100R							
		-250R			48	1-02b	51AL		
SHT 1	2	220	F2	T1-7	35	1-18a			
SHT 2		150	F82	T1-8	36	1-17a			
SHT 3		15	F162	T1-9	37	1-16a			32
		10				1-19a		1	32
SHT 4		-30	F242	T1-10	38	1-13a			7 & 8 SERIES
SHT 5		-100	F322	T1-11	39	1-12a			
SHT 6		-250	F402	T1-12	40	1-11a			
		-100R							
		-250R			40	1-12b	51BL		
SHT 1	3	220	F3	T2-1	29	1-28a			
SHT 2		150	F83	T2-2	30	1-27a			
SHT 3		15	F163	T2-3	31	1-26a			33
		10				1-29a		2	33
SHT 4		-30	F243	T2-4	32	1-23a			51 & 52 SERIES
SHT 5		-100	F323	T2-5	33	1-22a			
SHT 6		-250	F403	T2-6	34	1-21a			
		-100R							
		-250R			34	1-22b	51AL		
SHT 1	4	220	F4	T2-7	21	2-08a			
SHT 2		150	F84	T2-8	22	2-07a			
SHT 3		15	F164	T2-9	23	2-06a			34
		10				2-09a		3	34
SHT 4		-30	F244	T2-10	24	2-03a			2 & 3 SERIES
SHT 5		-100	F324	T2-11	25	2-02a			
SHT 6		-250	F404	T2-12	26	2-01a			
		-100R							
		-250R			26	2-02b	51BL		
SHT 1	5	220	F5	T3-1	15	2-18a			
SHT 2		150	F85	T3-2	16	2-17a			
SHT 3		15	F165	T3-3	17	2-16a			35
		10				2-19a		4	35
SHT 4		-30	F245	T3-4	18	2-13a			4 & 5 PARALLEL
SHT 5		-100	F325	T3-5	19	2-12a			
SHT 6		-250	F405	T3-6	20	2-11a			
		-100R							
		-250R			20	2-12b	53BL		
SHT 1	6	220	F6	T3-7	1	2-28a			
SHT 2		150	F86	T3-8	8	2-27a			
SHT 3		15	F166	T3-9	9	2-26a			36
		10				2-29a		3	36
SHT 4		-30	F246	T3-10	10	2-23a			9
SHT 5		-100	F326	T3-11	11	2-22a			
SHT 6		-250	F406	T3-12	12	2-21a			
		-100R							
		-250R			12	2-22b	53AL		
SHT 1	7	220	F7	T4-1	1	2-38a			
SHT 2		150	F87	T4-2	2	2-37a			
SHT 3		15	F167	T4-3	3	2-36a			37
		10				2-39a		6	37
SHT 4		-30	F247	T4-4	4	2-33a			10
SHT 5		-100	F327	T4-5	5	2-32a			
SHT 6		-250	F407	T4-6	6	2-31a			
		-100R							
		-250R			6	2-32b	52AL		
SHT 1	8	220	F8	T4-7	61	3-08a			
SHT 2		150	F88	T4-8	62	3-07a			
SHT 3		15	F168	T4-9	63	3-06a			38
		10				3-09a		7	38
SHT 4		-30	F248	T4-10	64	3-03a			53 & 54 SERIES
SHT 5		-100	F328	T4-11	65	3-02a			
SHT 6		-250	F408	T4-12	66	3-01a			
		-100R							
		-250R			66		52BL		

LOGICAL DIAGRAM SHT	FUSE SECTION	VOLTAGE	POWER SUPPLY FUSE LOCATION	POWER SUPPLY BINDING POST	MAIN FRAME BINDING POST	MAIN FRAME PANEL EDGE CONNECTOR	RESET RELAY POINT	CAPACITOR	BLEEDER RESISTOR
SHT 1	9	220	F9	T5-1	67	3-18a			
SHT 2		150	F89	T5-2	68	3-17a			
SHT 3		15	F169	T5-3	69	3-16a			50
		10				3-19a		15	50
SHT 4		-30	F249	T5-4	70	3-13a			55 & 56 PARALLEL
SHT 5		-100	F329	T5-5	71	3-12a			
SHT 6		-250	F409	T5-6	72	3-11a			
		-100R							
		-250R			72	3-12b	52BL		
SHT 1	10	220	F10	T5-7	75	3-28a			
SHT 2		150	F90	T5-8	76	3-27a			
SHT 3		15	F170	T5-9	77	3-26a			39 & 40 PARALLEL
		10				3-29a		8	39 & 40 PARALLEL
SHT 4		-30	F250	T5-10	78	3-23a			57 & 58 SERIES
SHT 5		-100	F330	T5-11	79	3-22a			
SHT 6		-250	F410	T5-12	80	3-21a			
		-100R							
		-250R			80	3-22b	52AL		
SHT 1	11	220	F11	T6-1	81	4-08a			
SHT 2		150	F91	T6-2	82	4-07a			
SHT 3		15	F171	T6-3	83	4-06a			43
		10				4-09a		10	43
SHT 4		-30	F251	T6-4	84	4-03a			12 & 13 SERIES
SHT 5		-100	F331	T6-5	85	4-02a			
SHT 6		-250	F411	T6-6	86	4-01a			
		-100R			85	4-02b	52AL		
		-250R			86	4-02b	52BL		
SHT 1	12	220	F12	T6-7	89	4-18a			
SHT 2		150	F92	T6-8	90	4-17a			
SHT 3		15	F172	T6-9	91	4-16a			44
		10				4-19a		11	44
SHT 4		-30	F252	T6-10	92	4-13a			14 & 15 SERIES
SHT 5		-100	F332	T6-11	93	4-12a			
SHT 6		-250	F412	T6-12	94	4-11a			
		-100R			93	4-12b	53BL		
		-250R			94	4-12b	53AL		
SHT 1	13	220	F13	T7-1	95	4-28a			
SHT 2		150	F93	T7-2	96	4-27a			
SHT 3		15	F173	T7-3	97	4-26a			45
		10				4-29a		12	45
SHT 4		-30	F253	T7-4	98	4-23a			16 & 19 SERIES
SHT 5		-100	F333	T7-5	99	4-22a			
SHT 6		-250	F413	T7-6	100	4-21a			
		-100R			99	4-22b	53AL		
		-250R			100	4-22b	53BL		
SHT 1	14	220	F14	T7-7	103	4-38a			
SHT 2		150	F94	T7-8	104	4-37a			
SHT 3		15	F174	T7-9	105	4-36a			48
		10				4-39a		13	48
SHT 4		-30	F254	T7-10	106	4-33a			20
SHT 5		-100	F334	T7-11	107	4-32a			
SHT 6		-250	F414	T7-12	108	4-31a			
		-100R			107	4-32b	54AL		
		-250R			108	4-32b	54BL		
SHT 1	15	220	F15	T8-1	49	3-34a			
SHT 2		150	F95	T8-2	50	3-33a			
SHT 3		15	F175	T8-3	51	3-32a			42
		10				3-35a		9	42
SHT 4		-30	F255	T8-4	52	3-29a			59 & 60 PARALLEL
SHT 5		-100	F335	T8-5	53	3-28a			
SHT 6		-250	F415	T8-6	54	3-27a			
		-100R							
		-250R			54	3-28b	53BL		
SHT 1	16	220	F15	T8-1	49	3-34a			
SHT 2		150	F95	T8-2	50	3-33a			
SHT 3		15	F175	T8-3	51	3-32a			42
		10				3-35a		9	42
SHT 4		-30	F255	T8-4	52	3-29a			59 & 60 PARALLEL
SHT 5		-100	F335	T8-5	53	3-28a			
SHT 6		-250	F415	T8-6	54	3-27a			
		-100R							
		-250R			54	3-28b	53BL		

NOTE:
X PRINT TO ENG. SPEC. 895291

9.29 SHEET 4 OF 5

WAS 7043571

NONE 503629

512743

512743

SYSTEM DIAGRAM

TERMINALS ON SERVICE PANEL OF MAIN FRAME

1	2	3	4	5	6	7	8	9	10	11	12	13	14
15	16	17	18	19	20	21	22	23	24	25	26	27	28
29	30	31	32	33	34	35	36	37	38	39	40	41	42
43	44	45	46	47	48	49	50	51	52	53	54	55	56
					57	58	59	60					
61	62	63	64	65	66	67	68	69	70	71	72	73	74
75	76	77	78	79	80	81	82	83	84	85	86	87	88
89	90	91	92	93	94	95	96	97	98	99	100	101	102
103	104	105	106	107	108	109	110	111	112	113	114	115	116
117	118	119	120	121	122	123	124	125	126	127	128	129	130
131	132	133	134	135	136	137	138	139	140	141	142	143	144
145	146	147	148	149	150	151	152	153	154	155	156	157	158
159	160	161	162	163	164	165	166	167	168	169	170	171	172
173	174	175	176	177	178	179	180	181	182	183	184	185	186

187	195
188	196
189	197
190	198
191	199
192	200
193	201
194	202

PLUGGABLE UNIT LOCATION CHART

9.29.05

PANEL 4

C		A		
				40
				39
318404	(2308)			38
318404	(2308)			37
318404	(2308)	*		36
318404	(2308)	505191	(9185)	35
318404	(2308)	503171	(9184)	34
318404	(2308)	503064	(9031)	33
318406	(2508)	503065	(9017)	32
318406	(2508)	503007	(9022)	31
318406	(2508)	512640	(9202)	30
318406	(2508)	503088	(9146)	29
318406	(2508)	503080	(9139)	28
318406	(2508)	503183	(5109)	27
318406	(2508)	503184	(5108)	26
318406	(2508)	503098	(9140)	25
318406	(2508)	503043	(9075)	24
318406	(2508)	518511	(2667)	23
318406	(2508)	503186	(9151)	22
318406	(2508)	503021	(9147)	21
318406	(2508)	503105	(9032)	20
318406	(2508)	503113	(9123)	19
318406	(2508)	505020	(9145)	18
318406	(2508)	503084	(9150)	17
318406	(2508)	503005	(9018)	16
318406	(2508)	505004	(9019)	15
318406	(2508)	503003	(9018)	14
318406	(2508)	505004	(9019)	13
318406	(2508)	503005	(9020)	12
318406	(2508)	503005	(9018)	11
318406	(2508)	503004	(9019)	10
318406	(2508)	505003	(9018)	08
503164	(9191)	503004	(9019)	08
505164	(9191)	503005	(9018)	07
503164	(9191)	505103	(9015)	06
503164	(9191)	318520	(2681)	05
503164	(9191)	505024	(9168)	04
503164	(9191)	505086	(9167)	03
318484	(2518)	505083	(9149	02
518487	(2521)	503142	(9014)	01

PANEL 2

C		A		
518561	(2472)	505039	(9064)	40
318562	(2473)	503038	(9063)	39
503035	(9060)	503173	(9170)	38
503170	(9181)	503173	(9170)	37
503157	(9182)	505174	(9171)	36
503170	(9181)	503173	(9170)	35
503157	(9182)	503173	(9170)	34
503170	(9181)	503173	(9170)	33
505157	(9182)	503174	(9171)	32
503170	(9181)	503173	(9170)	31
503157	(9182)	503173	(9170)	30
503170	(9181)	503173	(9170)	29
503157	(9182)	503174	(9171)	28
503170	(9181)	503173	(9170)	27
503157	(9182)	503173	(9170)	26
503170	(9181)	503173	(9170)	25
503157	(9182)	503174	(9171)	24
503156	(9180)	503152	(9176)	23
503155	(9179)	503152	(9176)	22
503156	(9180)	503152	(9176)	21
318556	(7611)	503008	(9023)	20
318555	(7610)	505197	(9200)	19
518556	(7611)	503197	(9200)	18
318555	(7610)	503015	(9025)	17
518556	(7611)	503008	(9023)	16
318555	(7610)	503015	(9025)	15
518556	(7611)	505015	(9025	14
318553	(7610)	503015	(9025)	13
518556	(7611)	503008	(9023)	12
503040	(9066)	503009	(9024)	11
505041	(9067)	505009	(9024)	10
503040	(9066)	505009	(9024)	09
503041	(9067)	503017	(9027)	08
503040	(9066)	503154	(9177)	07
503041	(9067)	505017	(9027)	06
503040	(9066)	503016	(9026)	05
503153	(9065)	503104	(9028)	04
503018	(9120)	503102	(9190)	03
503077	(9119)	503037	(9062)	02
503023	(9165)	503036	(9061)	01

PANEL 3

C		A		
		503181	(5193)	35
		503178	(9117)	34
503147	(5104)	503144	(5101)	33
503150	(5110)	503145	(5102)	32
*		503146	(5103)	31
		‡‡503148	(5106)	30
503168	(5112)	503149	(5107)	29
512642	(5113)	503096	(9134)	28
512642	(5113)	503097	(9138)	27
505190	(5105)	503111	(9110)	26
503190	(5105)	503046	(9107)	25
518425	(2403)	503045	(9106)	24
518568	(2428)	503044	(9105)	23
503172	(9122)	503110	(9104)	22
		503109	(9103)	21
		503108	(9102)	20
503006	(9021)	503107	(9101)	19
503189	(9126)	503048	(9109)	18
303176	(9129)	503048	(9109)	17
		503047	(9108)	16
503112	(9112)	503101	(9163)	15
503076	(9116)	503079	(9132)	14
503075	(9115)	503002	(9076)	13
503115	(9125)	503074	(9114)	12
503023	(9172)	503022	(9161)	11
503031	(9175)			10
505167	(9011)	503060	(9007)	09
503062	(9012)	503059	(9006)	08
503061	(9010)	505049	(9005)	07
505166	(9009)	503034	(9004)	06
503165	(9008)	503066	(9044)	05
503162	(9192)	518501	(2611)	04
		503159	(9187)	03
505158	(9186)	503163	(9185)	02
503161	(9189)	503160	(9188)	01

PANEL 1

C		A		
503029	(9050)	503001	(9043)	35
503030	(9051)	503026	(9042)	34
503180	(9052)	503065	(9041)	33
503092	(9053)	503014	(9040)	32
503070	(9054)	503106	(9039)	31
503032	(9055)	503012	(9038)	30
503185	(9111)	503000	(9037)	29
503094	(9059)	503143	(9036)	28
503116	(9130)	503011	(9035)	27
503193	(9121)	503099	(9142)	26
503033	(9056)	503010	(9034)	25
503069	(9049)	503091	(9033)	24
305177	(9143)	503042	(9074)	23
503151	(9160)	503093	(9057)	22
(512770)	(9199)	503087	(9175)	21
503182	(9013)	503188	(9073)	20
318471	(2478)	305187	(9127)	19
31847)	(2478)	503071	(9058)	18
505090	(9030)	503073	(9071)	17
318410	(2476)	503072	(9070)	16
318403	(2475)	505085	(9166)	15
318469	(2474)	303179	(9136)	14
31847)	(2478)	503019	(9144)	13
318471	(2478)	503089	(9029)	12
518471	(2478)	512653	(9155)	11
503028	(9048)	503192	(9137)	10
503027	(9047)	503078	(9131)	09
503175	(9118)	318554	(2743)	08
503015	(9113)	503082	(9148)	07
		503100	(9152)	06
505067	(9045)	503114	(9124)	05
503095	(9133)	503081	(9141)	04
318485	(2519)	503068	(9046)	03
318486	(2520)	518598	(2523)	02
318580	(7617)	318581	(7614)	01

NOTES:

I FIGURES IN PARENTHESIS REPRESENT PLUGGABLE UNIT CODE NUMBER.

II CHARTS VIEWED FROM PLUGGABLE SIDE OF PANEL.

III ASTERISK DENOTES THAT THESE POSITIONS ARE RESERVED FOR SECOND CORE STORAGE UNIT.

‡‡TUBES 07 & 08 USED FOR SINGLE CORE STG
ENTIRE PLUGGED FOR DOUBLE CORE STG

5034885 EC-2-42760

INTERNAL A.C. SERVICE WIRING

9.30.01

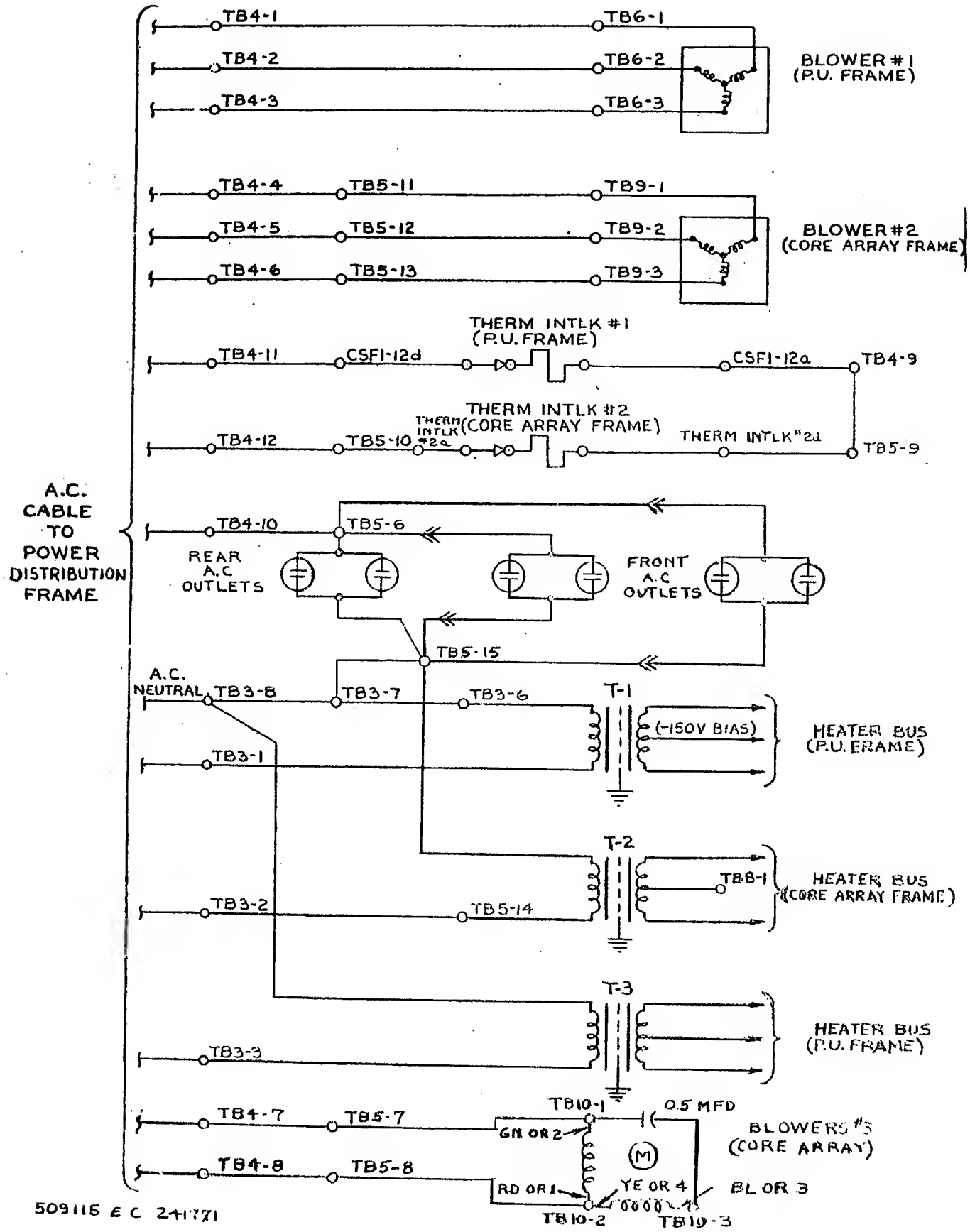

509115 E C 241771

INTERNAL D.C. SERVICE WIRING

9.30.02

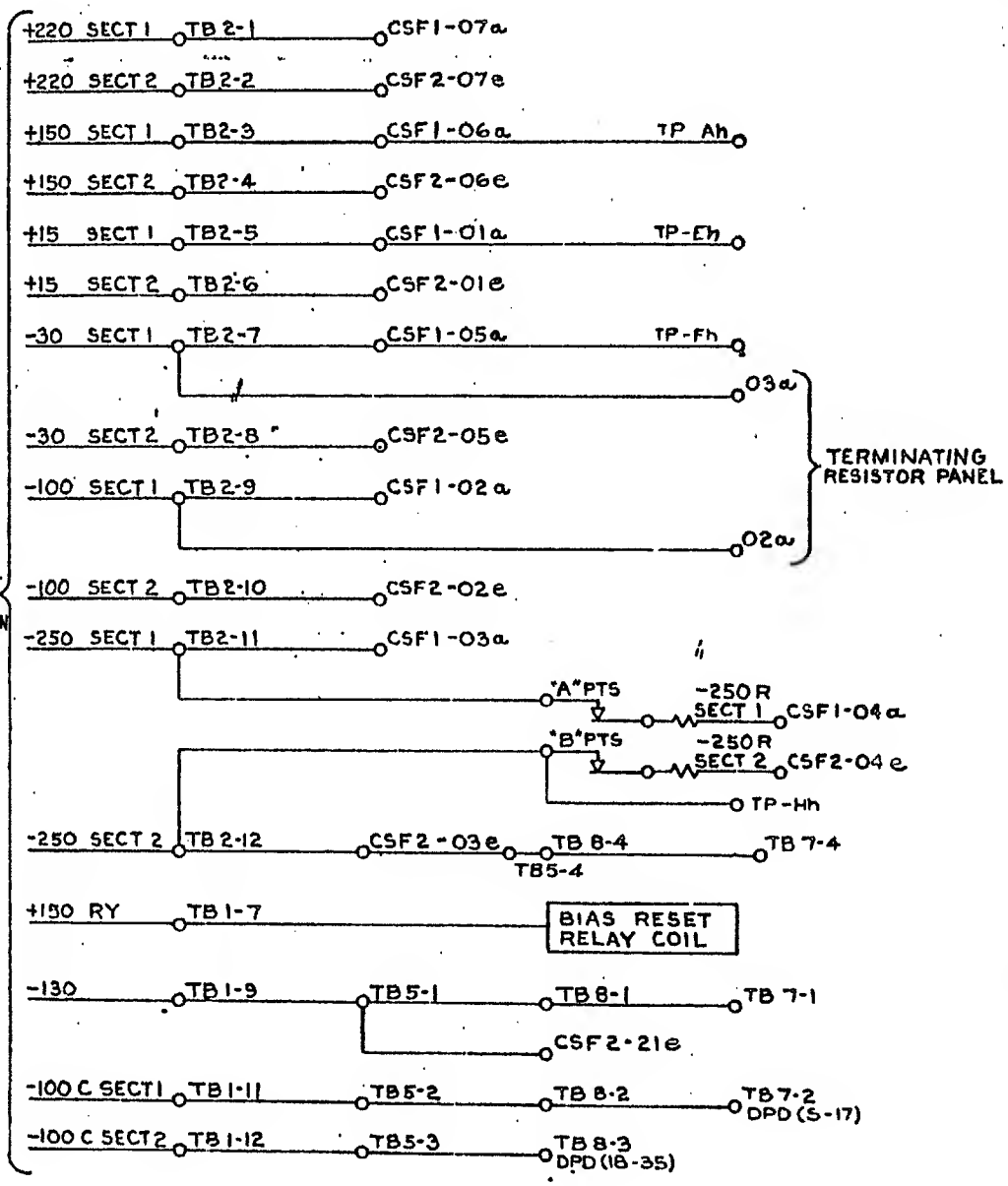

NOTES

CSF1 IS SECT 1 FOR DC SERVICE VOLTAGES
CSF2 IS SECT 2 FOR DC SERVICE VOLTAGES

509116 E.C 241944

INTERNATIONAL BUSINESS MACHINES CORP.	DRAW	RET	3-8-55	DATE	CHANGE NO.	DATE	CHANGE NO.	DATE	CHANGE NO.		
MACH. CORE STORAGE UNIT	CHECK	RET	5-23-55	6-9-55	241159						
MODEL 737	APPRD.	PKS	6-6-55	10-29-55	241944						
NAME SYSTEM DIAGRAM	REDRAW	JK	4-28-55								
9.30.02	CHECK	JK	4-28-55								

9.30.02 509116

TERMINAL BOARD ASSIGNMENTS 9.30.03

509117 241771

TB1

1	SPARE
2	SPARE
3	SPARE
4	SPARE
5	SPARE
6	SPARE
7	+150 RY
8	SPARE
9	-130V
10	SPARE
11	-100C SECT1
12	-100C SECT2

TB2

1	+220 SECT1
2	+220 SECT2
3	+150 SECT1
4	+150 SECT2
5	+15 SECT1
6	+15 SECT2
7	-30 SECT1
8	-30 SECT2
9	-100 SECT1
10	-100 SECT2
11	-250 SECT1
12	-250 SECT2

TB3

1	REG AC T-1
2	REG AC T-2
3	REG AC T-3
4	SPARE
5	SPARE
6	AC NEUT T-1
7	AC NEUT T-2
8	AC NEUT T-3
9	SPARE
10	SPARE

TB4

1	BM1 Ø1
2	BM1 Ø2
3	BM1 Ø3
4	BM2 Ø1
5	BM2 Ø2
6	BM2 Ø3
7	BM3 Ø1
8	BM3 Ø3
9	THERM INTLK JUNCTION
10	AC OUTLET
11	THERM INTLK
12	THERM INTLK

INPUT POWER FROM PDF

TB5

1	-130V
2	-100C SECT1
3	-100C SECT2
4	-250V
5	SPARE
6	A.C OUTLET
7	BM3 Ø1
8	BM3 Ø3
9	THERM INTLK
10	THERM INTLK
11	BM2 Ø1
12	BM2 Ø2
13	BM2 Ø3
14	REG AC T-2
15	AC NEUT T-2
16	SPARE

PU FRAME TO CORE ARRAY FRAME CONNECTIONS

TB6

1	BM1 Ø1
2	BM1 Ø2
3	BM1 Ø3

BLOWER PLATE P.U. FRAME

TB7

1	-130
2	-100C SECT1
3	SPARE
4	-250

DRIVER PANEL CSF3

TB8

1	-130
2	-100C SECT1
3	-100C SECT2
4	-250V

DRIVER PANEL CSF4

TB9

1	BM2 Ø1
2	BM2 Ø2
3	BM2 Ø3

BLOWER PLATE CORE ARRAY FRAME

TB10

1	BM3 Ø1
2	BM3 Ø2
3	TIE POINT FIELD COILE CAPACITOR
4	SPARE

CORE ARRAY BASE PLATE

WD - CSU - 1 AND CSU - 2 9.30.04

			CSU - 1		CSU - 2		
DC SECTION	VOLTAGE	CSU POWER DIST. TERMINAL	POWER DIST UNIT TERMINAL	FUSE LOCATION	POWER DIST UNIT TERMINAL	FUSE LOCATION	LOGICAL DIAGRAM. 9.17
1	+ 220	TB 2 - 1	T 13 - 1	F 41	T 15 - 1	F 43	SHEET 1
	+ 150	TB 2 - 3	T 13 - 2	F 121	T 15 - 2	F 123	SHEET 2
	+ 15	TB 2 - 5	T 13 - 3	F 201	T 15 - 3	F 203	SHEET 3
	- 30	TB 2 - 7	T 13 - 4	F 281	T 15 - 4	F 283	SHEET 4
	- 100	TB 2 - 9	T 13 - 5	F 361	T 15 - 8	F 363	SHEET 5
	- 250	TB 2 - 11	T 13 - 6	F 441	T 15 - 8	F 443	SHEET 6
	- 100 C	TB 1 - 11	T 14 - 5	F 376	T 16 - 5	F 378	SHEET 5
2	+ 220	TB 2 - 2	T 13 - 7	F 42	T 15 - 7	F 44	SHEET 1
	+ 150	TB 2 - 4	T 13 - 8	F 122	T 15 - 8	F 124	SHEET 2
	+ 15	TB 2 - 6	T 13 - 9	F 202	T 15 - 8	F 204	SHEET 3
	- 30	TB 2 - 8	T 13 - 10	F 282	T 15 - 10	F 283	SHEET 4
	- 100	TB 2 - 10	T 13 - 11	F 362	T 15 - 11	F 364	SHEET 5
	- 250	TB 2 - 12	T 13 - 12	F 442	T 15 - 12	F 444	SHEET 6
	- 100 C	TB 1 - 12	T 14 - 6	F 377	T 16 - 6	F 379	SHEET 5
+150 RELAY	+ 150	TB 1 - 7	T 14 - 7	F 340	T 16 - 7	F 300	SHEETS 4, 5
	- 130	TB 1 - 9	T 14 - 10	F 60	T 16 - 10	F 100	SHEETS 1, 2

THIS COPY REDUCED 39%

			CSU - 1		CSU - 2		
A.C. CIRCUIT	VOLTAGE	C.S.U. POWER DIST. UNIT TERM.	POWER DIST. UNIT TERM.	FUSE LOCATION	POWER DIST. UNIT TERM.	FUSE LOCATION	LOGICAL DIAGRAM
Transformer T 1	120 V - 1 ϕ	TB 3 - 1	T 31 - 12	F 461	T 33 - 12	F 463	SH. 6-9.18
		TB 3 - 8					
Transformer T 2	120 V - 1 ϕ	TB 3 - 2	T 31 - 13	F 462	T 33 - 13	F 464	SH. 6-9.18
		NEUTRAL					
Transformer T 3	120 V - 1 ϕ	TB 3 - 3	TB 141 - 5	CB 211	TB 141 - 6	CB 211	SH. 1 - 9.18
		TB 3 - 8					
A.C. OUTLETS	120 V - 1 ϕ	TB 4 - 10	T 14 - 11	CB 2811	T 16 - 11	CB 2811	9.28
		NEUTRAL					
BLOWER MOTOR 1	1 ϕ	TB 4 - 1	T 32 - 4	F 37	T 34 - 4	F 36	SH 1 - 9.19
	2 ϕ	TB 4 - 2	T 32 - 5	F 117	T 34 - 5	F 116	SH. 2 - 9.19
	3 ϕ	TB 4 - 3	T 32 - 6	F 197	T 34 - 6	F 196	SH. 3 - 9.19
BLOWER MOTOR 2	1 ϕ	TB 4 - 4	T 32 - 7	F 77	T 34 - 7	F 76	SH. 1 - 9.19
	1 ϕ	TB 4 - 5	T 32 - 8	F 157	T 34 - 8	F 156	SH. 2-9.19
	3 ϕ	TB 4 - 6	T 32 - 9	F 237	T 34 - 9	F 236	SH. 3 - 9.19
BLOWER MOTOR 3	3 ϕ	TB 4 - 7	T 32 - 13	F 277	T 34 - 13	F 276	SH. 4 - 9.19
	3 ϕ	TB 4 - 8	T 32 - 14	F 437	T 34 - 14	F 356	SH. 5,6 9.19
THERMAL INTERLOCK		TB 4 - 11	T 32 - 1		T 34 - 1		9.23
		TB 4 - 12	T 14 - 12		T 16 - 12		

512927

STANDARDS CODE NONE

RELEASED FOR ASSEM. 503629

QTY.

NOTE X PRINT TO ENG. SPEC. NO.

INTERNATIONAL BUSINESS MACHINES CORP.				DATE	CHANGE NO.	DATE	CHANGE NO.
MACH. ELECTRONIC DATA PROCESSING MACHINE	DRAW						
	CHECK	TFD	9-19-56	9-24-56	243198		
	APPRD	RET	9-21-56				
NAME SYSTEM DIAGRAM 9.30.04	REDRAW						
	CHECK						

512927

G. B. CO. NO. N-978W 17948

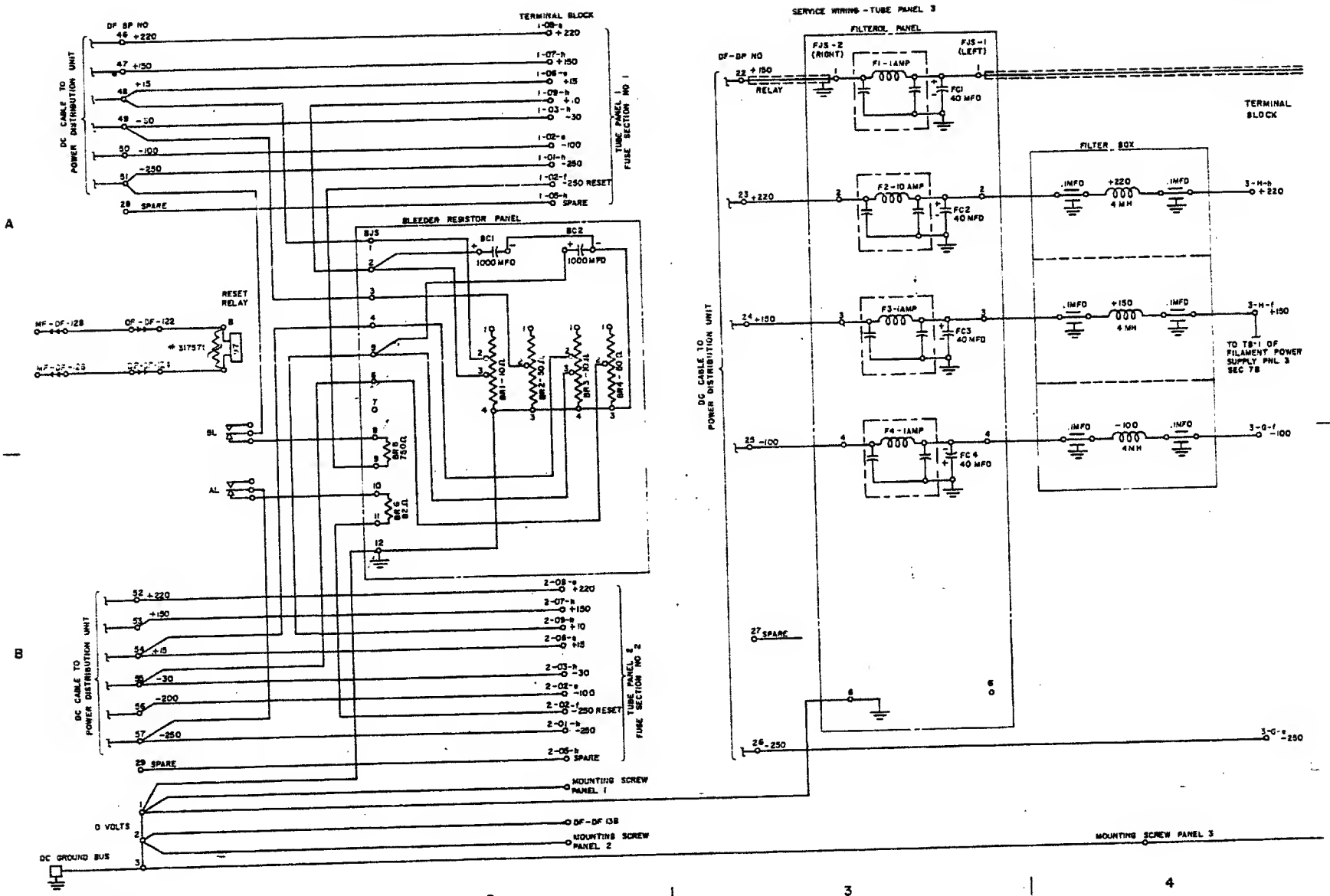
SERVICE WIRING - TUBE PANEL 3
FILTEROL PANEL
TERMINAL BLOCK
BLEEDER RESISTOR PANEL
RESET RELAY
FILTER BOX
DC CABLE TO POWER DISTRIBUTION UNIT
TUBE PANEL 1 FUSE SECTION NO 1
TUBE PANEL 2 FUSE SECTION NO 2
0 VOLTS
DC GROUND BUS
MOUNTING SCREW PANEL 1
MOUNTING SCREW PANEL 2
MOUNTING SCREW PANEL 3
TO TB-1 OF FILAMENT POWER SUPPLY PNL 3 SEC TB

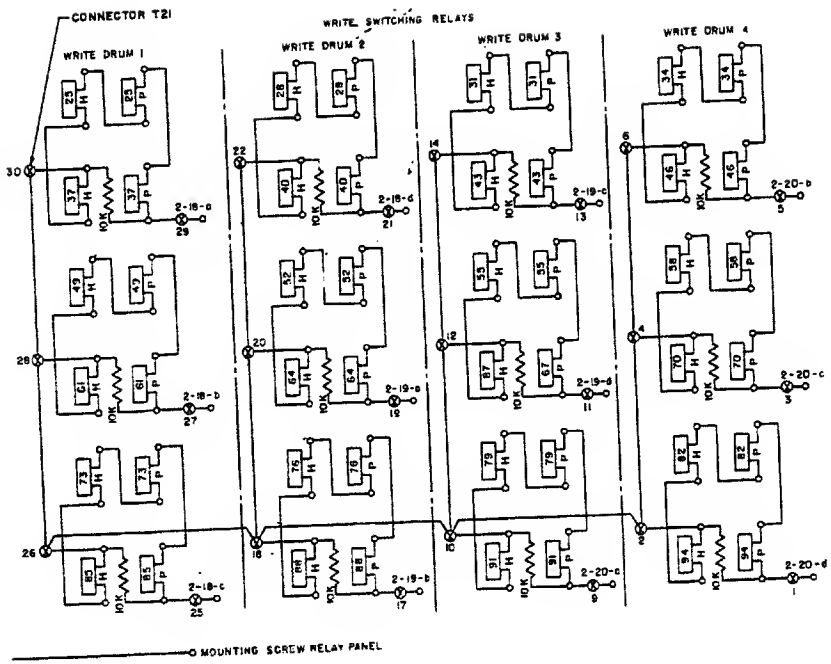
CONNECTOR T21
WRITE SWITCHING RELAYS
WRITE DRUM 1
WRITE DRUM 2
WRITE DRUM 3
WRITE DRUM 4
MOUNTING SCREW RELAY PANEL

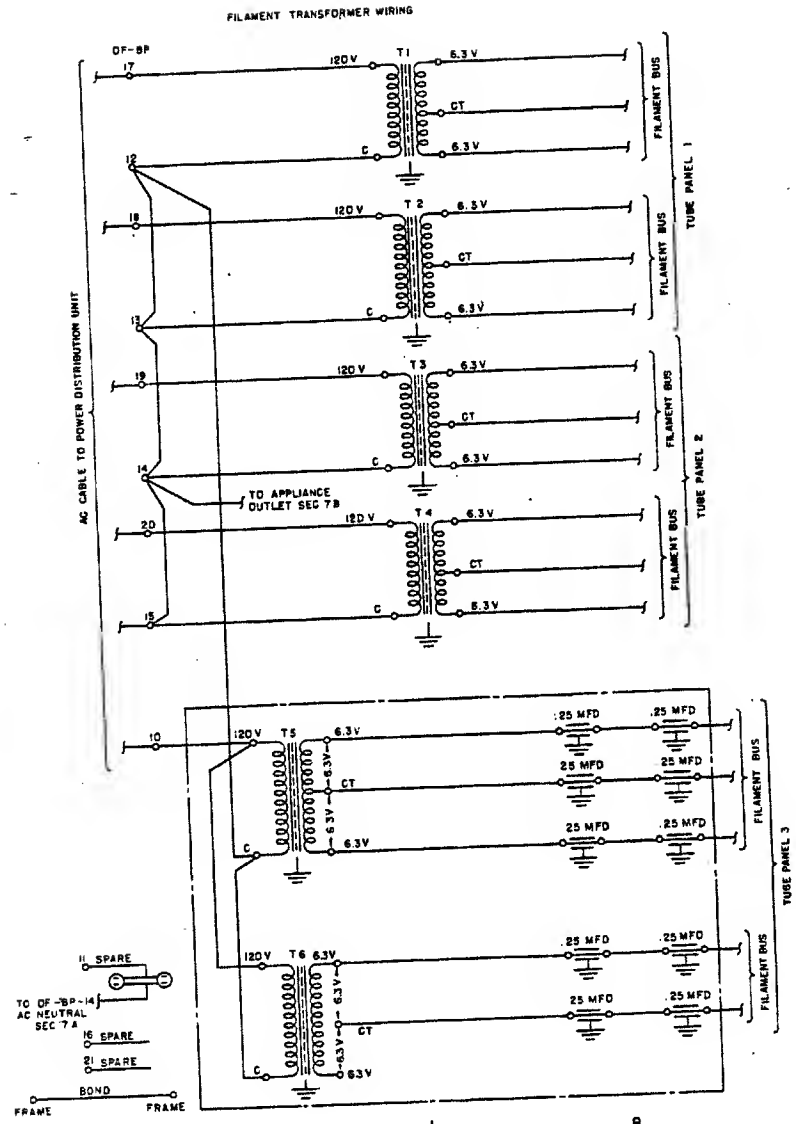
FILAMENT TRANSFORMER WIRING
DF-8P
AC CABLE TO POWER DISTRIBUTION UNIT
TO APPLIANCE OUTLET SEC 7B
11 SPARE
TO DF-8P-14 AC NEUTRAL SEC 7A
16 SPARE
21 SPARE
BOND
FRAME
FILAMENT BUS
TUBE PANEL 1
TUBE PANEL 2
TUBE PANEL 3

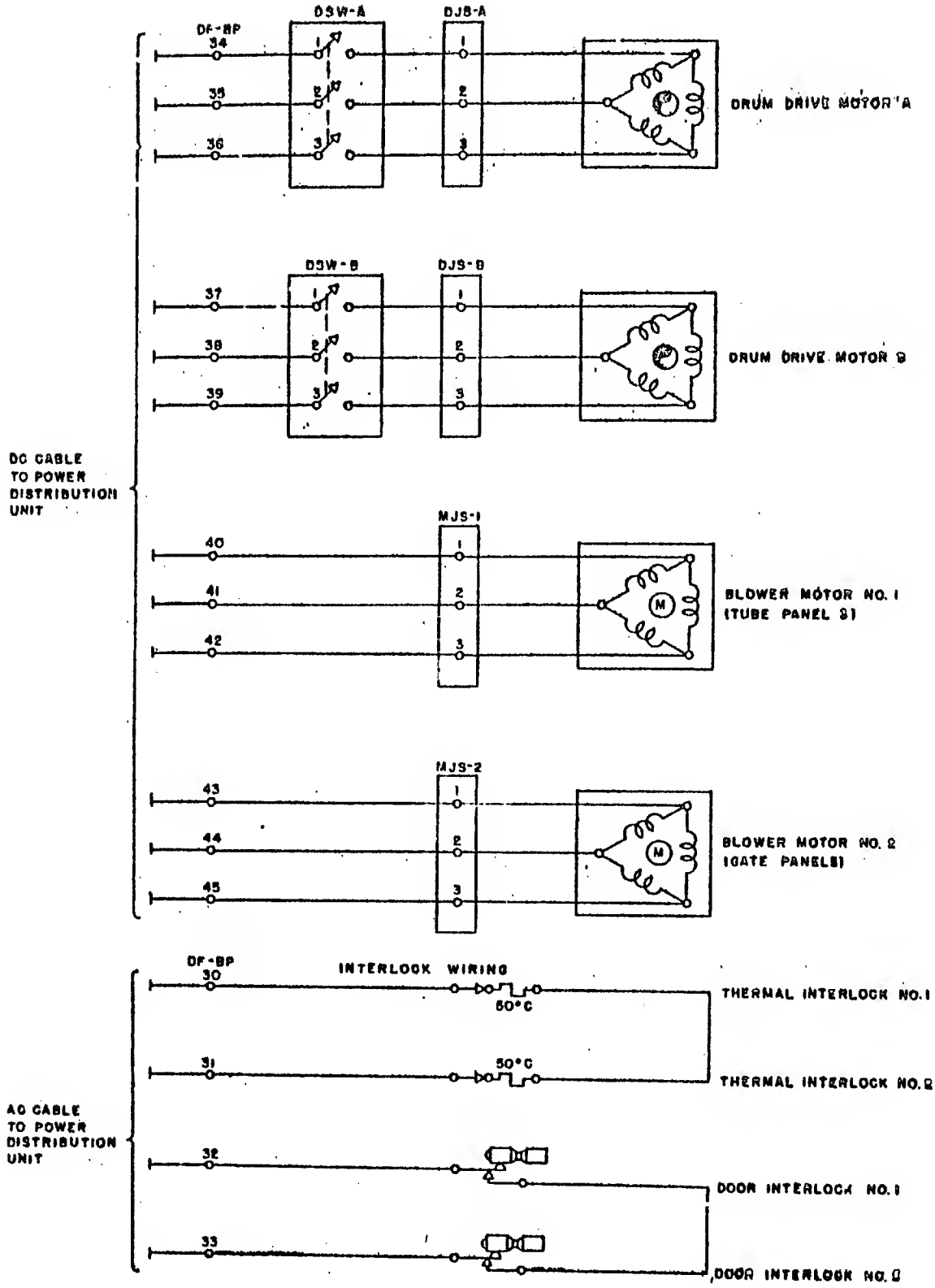

54251 EC 241159

LOCATION AND IDENTIFICATION OF COMPONENTS

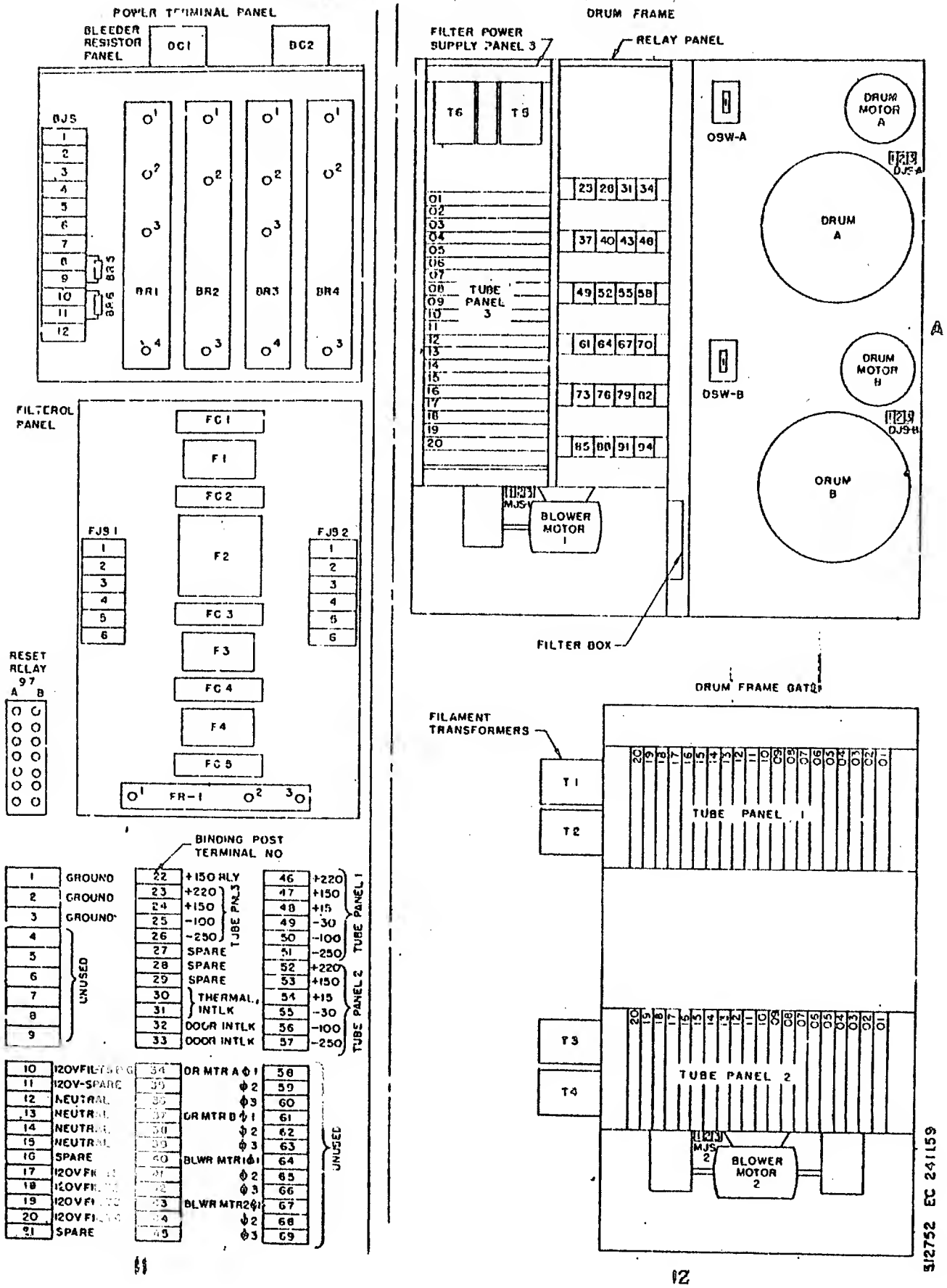

WIRE CONTACT RELAYS

RELAY NUMBER	WIRING DIAGRAM	LOGICAL DIAGRAM	CONTACT POINTS LOGICAL DIAGRAM LOCATION												NAME		SIZE	TYPE	PART NO
			1	2	3	4	5	6	7	8	9	10	11	12					
		7.06	7.03	7.03	7.03	7.03	7.03	7.03	7.03	7.03	7.03	7.03	7.03	7.03					
25	5A														WRITE DRUM	1	12		196187
28	5A															2	12		
31	6A															3	12		
34	6A															4	12		
37	5B															1	12		
40	5B															2	12		
43	6B															3	12		
46	6B															4	12		
49	5B															1	12		
52	5B															2	12		
55	6B															3	12		
58	6B															4	12		
61	5B															1	12		
64	5B															2	12		
67	6B															3	12		
70	6B															4	12		
73	5B															1	12		
76	5B															2	12		
79	6B															3	12		
82	6B															4	12		
85	5B															1	12		
88	5B															2	12		
91	6B															3	12		
94	6B															4	12		

5127559 EC 241159

512754

	DATE	DRAWING
	6-10-55	241159
	9-24-56	243178

STANDARDS CLASS NONE

RELEASED FOR MANUFACTURE QTY. 703889

WAS 704-3540

512754

NOTE:
1. PRINT TO ENG SPEC 895291

SHEET 6 OF 6 9.32

DC SECTION	VOLTAGE	DRUM FRAME BINDING POST			AUX. DF POWER DIST UNIT TERMINAL	AUX. DF FUSE LOCATION			DF POWER DIST UNIT TERMINAL	DF FUSE LOCATION					LOGICAL DIAGRAM 9.17
1	+220	48			S3-1	F 18			S7-1	F 46					SHT 1
	+150	47			S3-2	F56			S7-2	F125					SHT 2
	+15	48			S3-3	F178			ST-3	F205					SHT 3
	-30	49			S3-4	F256			S7-4	F285					SHT 4
	-100	50			S3-5	F338			S7-5	F365					SHT 5
	-230	51			S3-6	F416			S7-6	F446					SHT 6
2	+220	52			S3-7	F 17			S7-7	F 46					SHT 1
	+150	53			S3-8	F57			S7-9	F126					SHT 2
	+15	54			S3-9	F17T			S7-9	F206					SHT 3
	-30	55			S3-10	F25T			S7-10	F286					SHT 4
	-100	56			S3-11	F337			S7-11	F366					SHT 5
	-250	57			S3-12	F417			S7-12	F446					SHT 6
3	+220	23			S4-1	F 16			S8-1	F 4T					SHT 1
	+150	24			S4-2	F 98			S8-2	F127					SHT 2
	-100	25			S4-8	F339			S8-5	F367					SHT 5
	-250	26			S4-6	F419			S8-6	F44T					SHT 6
+150 RELAY	+150	22			S4-12	F220			S8-12	F380					
DC RETURN	0	3	ZERO VOLT BUS ON POWER DISTRIBUTION UNIT												

AC CIRCUIT	VOLTAGE	DRUM FRAME BINDING UNIT	AUX. DF POWER DIST UNIT TERMINAL	AUX. DF FUSE LOCATION			DF POWER DIST UNIT TERMINAL	DF FUSE LOCATION					LOGICAL DIAGRAM
TRANSFORMER T1	120V-1ø	17	S9-1	F2T			S15-1	F 65					SHT 1 9.18
		12(H)											
TRANSFORMER T2	120V-1ø	19	S9-2	F107			S15-2	F143					SHT 2 9.18
		13(H)											
TRANSFORMER T5	120V-1ø	19	S9-3	F187			S15-3	F226					SHT 5 9.19
		14(N)											
TRANSFORMER T4	120V-1ø	20	S10-1	F267			S16-1	F305					SHT 4 9.18
		15(N)											
TRANSFORMER T3 T6	120V-1ø	10	S10-2	F347			S16-2	F385					SHT 6 9.18
		20(H)											
DRUM-DRIVE MOTOR - A	1ø	34	S10-4	F272			S18-4	F276					SHT 4 9.19
	208V-2ø	35	S10-5	F352			S16-5	F355					SHT 6 9.19
	3ø	36	S10-6	F432			S16-6	F435					SHT 6 9.19
DRUM-DRIVE MOTOR -B	1ø	37	S10-7	F312			S18-7	F315					SHT 4 9.19
	208V-2ø	38	S10-8	F392			S16-8	F396					SHT 5 9.19
	3ø	39	S10-9	F472			S18-9	F475					SHT 6 9.19
BLOWER MOTOR 1	1ø	40	S9-4	F 32			S18-4	F 35					SHT 1 9.19
	208V-2ø	41	S9-5	F112			S15-5	F113					SHT 2 9.19
	3ø	42	S9-6	F192			S15-6	F193					SHT 3 9.19
BLOWER MOTOR 2	1ø	43	S9-7	F 72			S15-7	F 75					SHT 1 9.19
	208V-2ø	44	S9-8	F152			S15-8	F155					SHT 2 9.19
	3ø	45	S9-9	F232			S16-9	F235					SHT 3 9.18
THERMAL INTERLOCK		30	S10-12				S16-12						9.23
		31	S10-13				S16-13						9.23

NOTE: N INDICATES NEUTRAL IN 208V 3ø4 WIRE SYSTEM

512754 EC 243178

INTERNATIONAL BUSINESS MACHINES CORP
ELECTRONIC ANALYTICAL CONTROL UNIT 704
SYSTEM DIAGRAM 9.32
DRAWN J.L.C. 6-24-54 SCALE NONE
CHECK E.J.S. 7-6-54
APPROV PNS 6-7-55 CHECK WAL 8-8-54

512754

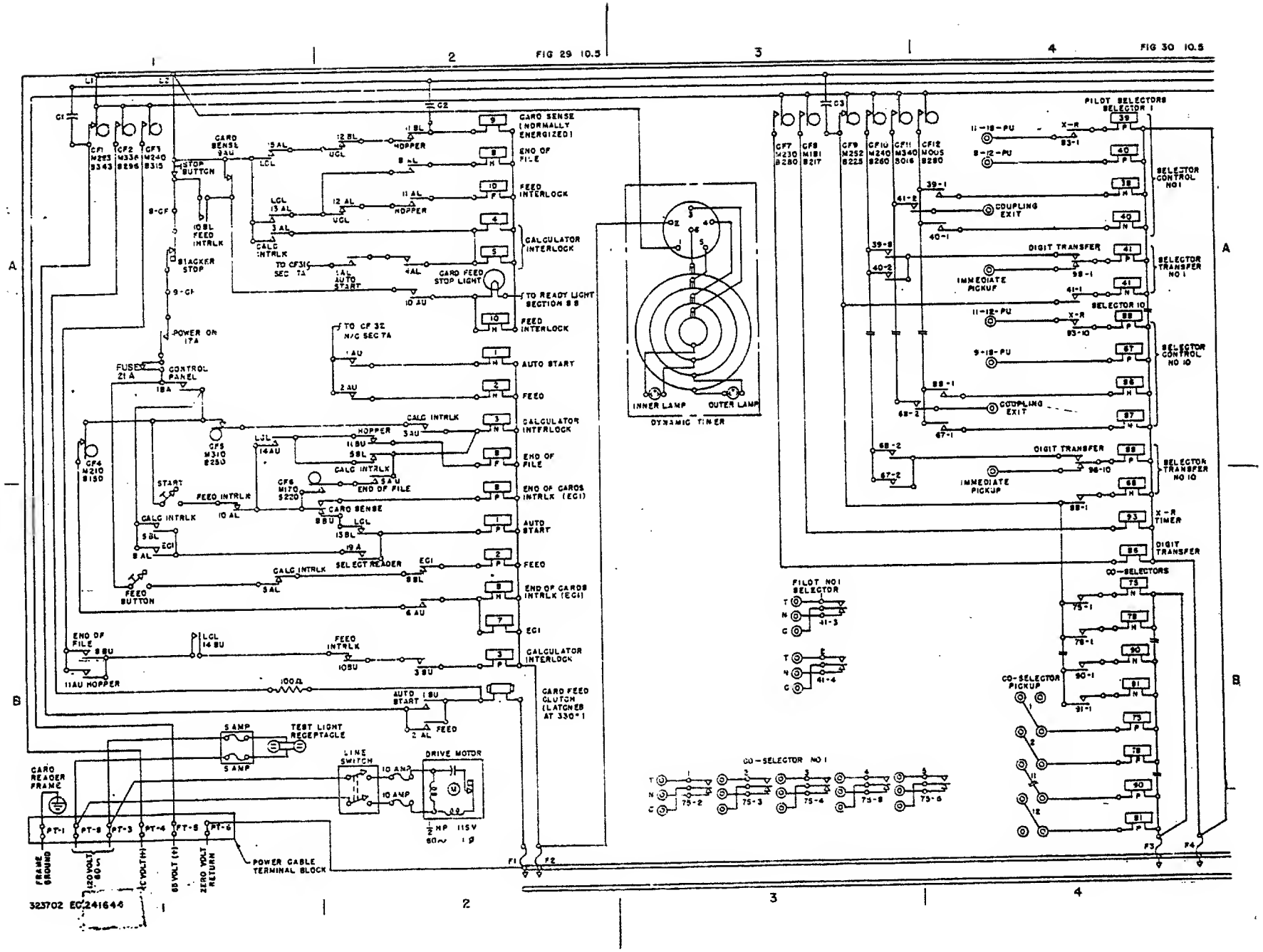
FIG 29 10.5
FIG 30 10.5
CARD SENSE (NORMALLY ENERGIZED)
END OF FILE
FEED INTERLOCK
CALCULATOR INTERLOCK
TO READY LIGHT SECTION 8 B
AUTO START
FEED
END OF CARDS INTRLK (ECI)
ECI
CARD FEED CLUTCH (LATCHED AT 330°)
STOP BUTTON
STACKER STOP
POWER ON 17A
FUSE 21 A
CONTROL PANEL
FEED BUTTON
START
CARD FEED STOP LIGHT
TO CF 3E N/C SEC 7A
TO CF3I SEC 7A
SELECT READER
11AU HOPPER
100Ω
TEST LIGHT RECEPTACLE
5 AMP
LINE SWITCH
DRIVE MOTOR
10 AMP
1/2 HP 115V 60~ 1φ
CARD READER FRAME
POWER CABLE TERMINAL BLOCK
FRAME GROUND
120 VOLT 60~
65 VOLT (+)
ZERO VOLT RETURN
DYNAMIC TIMER
INNER LAMP
OUTER LAMP
PILOT SELECTORS SELECTOR 1
SELECTOR CONTROL NO 1
SELECTOR TRANSFER NO 1
SELECTOR 10
SELECTOR CONTROL NO 10
SELECTOR TRANSFER NO 10
X-R TIMER
DIGIT TRANSFER
CO-SELECTORS
CO-SELECTOR PICKUP
PILOT NO 1 SELECTOR
CO-SELECTOR NO 1
COUPLING EXIT
IMMEDIATE PICKUP
323702 EC241644

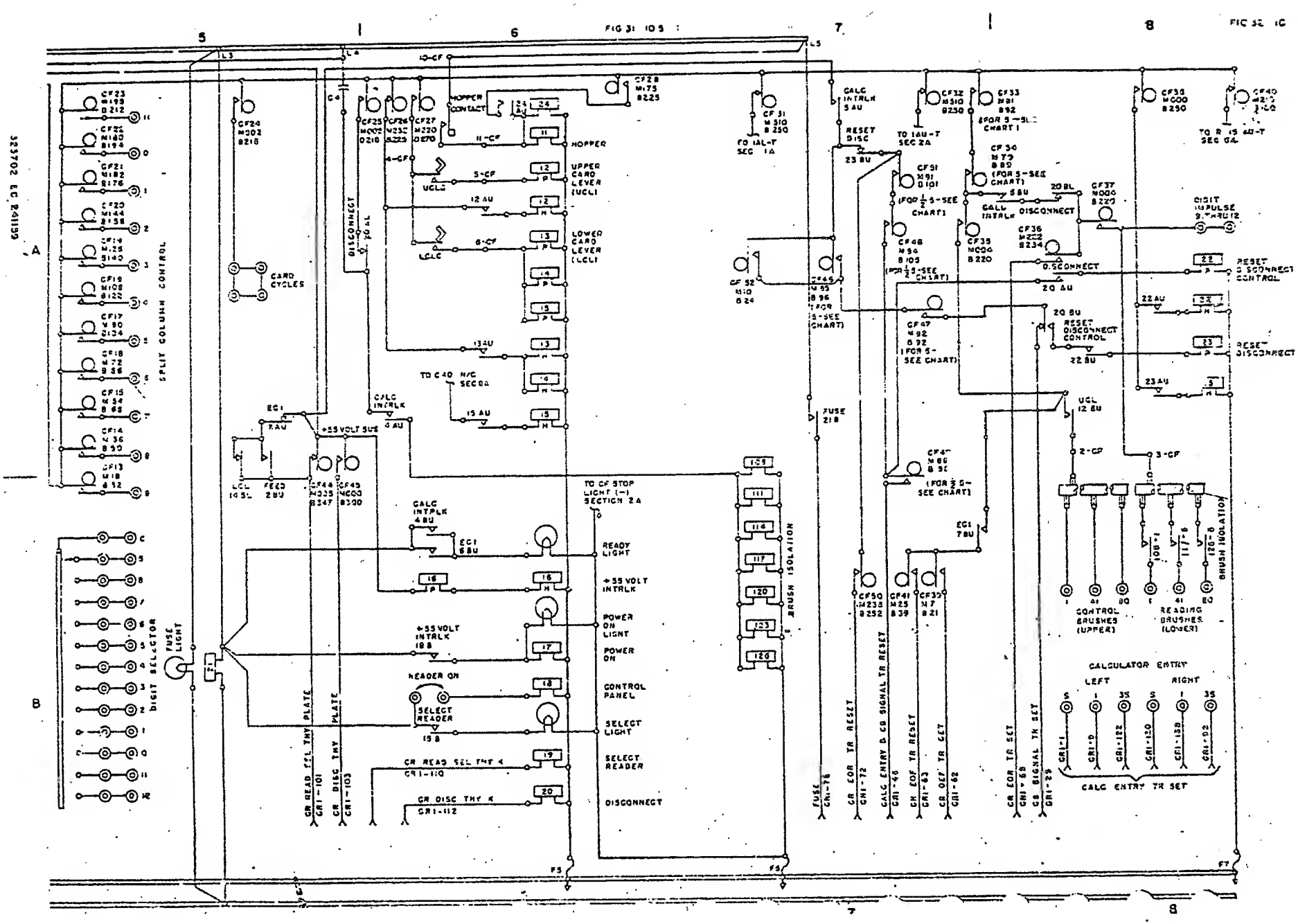
FIG 31 10 5
FIG 32 1C
SPLIT COLUMN CONTROL
DIGIT SELECTOR
FUSE LIGHT
CARD CYCLES
HOPPER CONTACT
HOPPER
UPPER CARD LEVER (UCL)
LOWER CARD LEVER (LCL)
DISCONNECT
CALC INTRLK
+55 VOLT SUS
READY LIGHT
+55 VOLT INTRLK
POWER ON LIGHT
POWER ON
CONTROL PANEL
SELECT LIGHT
SELECT READER
DISCONNECT
READER ON
SELECT READER
BRUSH ISOLATION
RESET DISC
RESET DISCONNECT CONTROL
RESET DISCONNECT
DIGIT IMPULSE 9 THRU 12
CONTROL BRUSHES (UPPER)
READING BRUSHES (LOWER)
CALCULATOR ENTRY
LEFT
RIGHT
CALC ENTRY TR SET
CR EOR TR RESET
CALC ENTRY & CB SIGNAL TR RESET
CR EOF TR RESET
CR OEF TR SET
CR EOR TR SET
CB SIGNAL TR SET
CR READ SEL THY PLATE
CR DISC THY PLATE
CR READ SEL THY K
CR DISC THY K
FUSE 21B
TO CF STOP LIGHT (-) SECTION 2A
TO 1AU-T SEC 2A
TO R 15 4U-T SEC 04
TO C40 N/C SEC 0A
FOR 1AL-T SEC 1A
323702 EC 241159

DUO RELAYS

RELAY NO	COILS			CONTACT POINTS								NAME	PART NO	TYPE
	PU	PL	H	A	AU	AC	A	B	BU	BC	BL			
1	2 B		2 A		2 A		2 A		2 B			AUTO START	127700	D
2	2 B		2 A		2 A		2 B		5 B			FEED	127700	D
3	2 B		2 A		2 A		1 A		2 B		1 B	CALCULATOR INTERLOCK	127700	D
4	2 A				6 A		2 A		6 B			CALCULATOR INTERLOCK	122538	S
5	2 A				7 A		1 B		8 A		2 A	CALCULATOR INTERLOCK	124843	S
6	2 B		2 B		2 B		1 B		6 B		2 B	END OF CARDS INTERLOCK	127700	D
7	2 B				5 A				7 B			END OF CARDS INTERLOCK	124843	S
8	2 A		2 A		2 B		2 A		1 B			END OF FILE	127050	D
9	2 A				1 A				2 B			CARD SENSE	124843	S
10	2 A		2 A		2 A		1 B		2 B		1 A	FEED INTERLOCK	127700	D
11	6 A				1 B		2 A		2 A		2 A	HOPPER	124843	S
12	6 A		6 A		6 A		2 A		8 A		2 A	UPPER CARD LEVER	127700	D
13	6 A		6 A		6 A		1 A				2 B	LOWER CARD LEVER	127700	D
14	6 A		6 A		1 A				1 B		5 B	LOWER CARD LEVER	137747	D
15	6 A		6 A		6 A		1 A					LOWER CARD LEVER	127679	D
16	6 B		6 B					6 B				55 VOLT SUPPLY INTERLOCK	121058	D
17	6 B			1 A								POWER ON	111354	S
18	6 B			1 A								CONTROL PANEL	111354	S
19	6 B			2 B				6 B				SELECT READER	111354	S
20	6 B				8 A		5 A		8 A		8 A	DISCONNECT	124843	S
21	5 B			1 A				7 A				FUSE	111351	S
22	8 A		8 A		8 A				8 A			RESET DISCONNECT CONTROL	127700	D
23	8 A		8 A		8 A				7 A			RESET DISCONNECT	127700	D
24	6 A				6 A							HOPPER CONTACT RELAY HOLD	124843	S

WIRE CONTACT RELAYS

RELAY NO	COILS PU1	COILS PU2	COILS H	CONTACT POINTS 1	2	3	4	5	6	7	8	9	10	11	12	NAME	SIZE	TYPE	RELAY NO
39	4A		4A	4A	3A											PILOT SELECTOR NO.1 11-12-PU CONTROL	4	(L)	39
40	4A		4A	4A	3A											PILOT SELECTOR NO.1 9-12-PU CONTROL	4	(L)	40
41	4A		4A	4A	3A	3B	3B									PILOT SELECTOR NO.1 TRANSFER	4	(L)	41
42	NS															PILOT SELECTOR NO.2 11-12-PU CONTROL	4	(L)	42
43	NS															PILOT SELECTOR NO.2 9-12-PU CONTROL	4	(L)	43
44	NS															PILOT SELECTOR NO.2 TRANSFER	4	(L)	44
45	NS															PILOT SELECTOR NO.3 11-12-PU CONTROL	4	(L)	45
46	NS															PILOT SELECTOR NO.3 9-12-PU CONTROL	4	(L)	46
47	NS															PILOT SELECTOR NO.3 TRANSFER	4	(L)	47
48	NS															PILOT SELECTOR NO.4 11-12-PU CONTROL	4	(L)	48
49	NS															PILOT SELECTOR NO.4 9-12-PU CONTROL	4	(L)	49
50	NS															PILOT SELECTOR NO.4 TRANSFER	4	(L)	50
51	NS															PILOT SELECTOR NO.5 11-12-PU CONTROL	4	(L)	51
52	NS															PILOT SELECTOR NO.5 9-12-PU CONTROL	4	(L)	52
53	NS															PILOT SELECTOR NO.5 TRANSFER	4	(L)	53
54	NS															PILOT SELECTOR NO.6 11-12-PU CONTROL	4	(L)	54
55	NS															PILOT SELECTOR NO.6 9-12-PU CONTROL	4	(L)	55
56	NS															PILOT SELECTOR NO.6 TRANSFER	4	(L)	56
57	NS															PILOT SELECTOR NO.7 11-12-PU CONTROL	4	(L)	57
58	NS															PILOT SELECTOR NO.7 9-12-PU CONTROL	4	(L)	58
59	NS															PILOT SELECTOR NO.7 TRANSFER	4	(L)	59
60	NS															PILOT SELECTOR NO.8 11-12-PU CONTROL	4	(L)	60
61	NS															PILOT SELECTOR NO.8 9-12-PU CONTROL	4	(L)	61
62	NS															PILOT SELECTOR NO.8 TRANSFER	4	(L)	62
63	NS															PILOT SELECTOR NO.9 11-12-PU CONTROL	4	(L)	63
64	NS															PILOT SELECTOR NO.9 9-12-PU CONTROL	4	(L)	64
65	NS															PILOT SELECTOR NO.9 TRANSFER	4	(L)	65
66	4A		4A	4A	3A											PILOT SELECTOR NO.10 11-12-PU CONTROL	4	(L)	66
67	4A		4A	4A	3B											PILOT SELECTOR NO.10 9-12-PU CONTROL	4	(L)	67
68	4A		4B	4B	3A	NS	NS									PILOT SELECTOR NO.10 TRANSFER	4	(L)	68
75	4B		4B	4B	3B	3B	3B	4B	4B							CO-SELECTOR NO.1	6	(N)	75
76	4B		4B	4B	NS	NS	NS	NS	NS							CO-SELECTOR NO. 2	6	(N)	76
78	NS															CO-SELECTOR NO.3	6	(N)	78
79	NS															CO-SELECTOR NO.4	6	(N)	79
81	NS															CO-SELECTOR NO.5	6	(N)	81
82	NS															CO-SELECTOR NO.6	6	(N)	82
84	NS															CO-SELECTOR NO.7	6	(N)	84
85	NS															CO-SELECTOR NO.8	6	(N)	85
87	NS															CO-SELECTOR NO.9	6	(N)	87
88	NS															CO-SELECTOR NO.10	6	(N)	88
90	4B		4B	4B	NS	NS	NS	NS	NS							CO-SELECTOR NO.11	6	(N)	90
91	4B		4B	4B	NS	NS	NS	NS	NS							CO-SELECTOR NO.12	6	(N)	91
93	4B			4A	NS	NS	NS	NS	NS	NS	NS	NS	4A			X-R TIMER	12	(P)	93
96	4B			4A	NS	NS	NS	NS	NS	NS	NS	NS	4A			DIGIT TRANSFER	12	(P)	96
108	7A			8B	NS	NS	NS	NS	NS	NS	NS	NS	NS	NS	NS	BRUSH ISOLATION	12	(H)	108
111	7B			NS	NS	NS	NS	NS	NS	NS	NS	NS	NS	NS	NS	BRUSH ISOLATION	12	(H)	111
114	7B			NS	NS	NS	NS	NS	NS	NS	NS	NS	NS	NS	NS	BRUSH ISOLATION	12	(H)	114
117	7B			NS	NS	NS	NS	NS	NS	NS	NS	NS	NS	NS	NS	BRUSH ISOLATION	12	(H)	117
120	7B			NS	NS	NS	NS	8D	NS	NS	NS	NS	NS	NS	NS	BRUSH ISOLATION	12	(H)	120
123	7B			NS	NS	NS	NS	NS	NS	NS	NS	NS	NS	NS	NS	BRUSH ISOLATION	12	(H)	123
126	7B			NS	NS	NS	NS	NS	NS	NS	8B					BRUSH ISOLATION	12	(H)	126

RELAY GATES

LEFT GATE (NO 1) DUO RELAYS

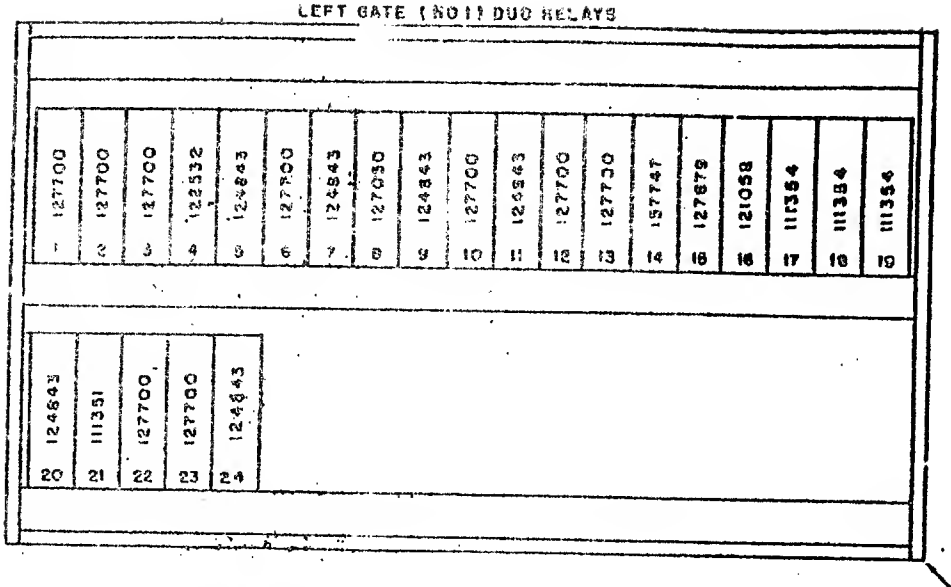

HINGE END

REAR GATE (NO 2) WIRE CONTACT RELAYS

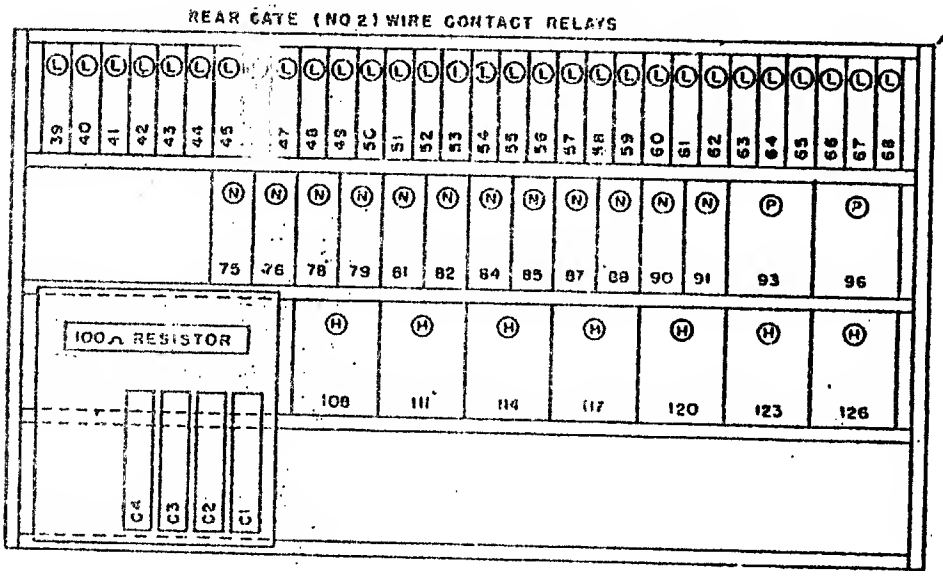

WIRE CONTACT RELAYS

CODE	SIZE	COILS	COIL NO	ASSEM NO	NAME
(A)	FOUR	ONE	198881	196206	STANDARD
(B)	FOUR	TWO	198804	196207	STANDARD
(C)	FOUR	TWO	198887	196208	HIGH RESISTANCE HOLD
(D)					
(E)	FOUR	THREE	186259 186260 186693	186696	HIGH SPEED PICKUP
(F)	SIX	ONE	198882	196193	STANDARD
(G)	SIX	TWO	198885	196197	STANDARD
(H)	TWELVE	ONE	198882	196186	STANDARD
(J)	TWELVE	TWO	198887	196187	STANDARD
(K)					
(L)	FOUR	TWO	228881	104753	HIGH SPEED PICKUP
(M)	SIX	ONE	107559	107558	HIGH SPEED PICKUP
(N)	SIX	TWO	107566	107560	HIGH SPEED PICKUP
(P)	TWELVE	ONE	107557	107556	HIGH SPEED PICKUP
(Q)	TWELVE	TWO	108386	108380	HIGH SPEED PICKUP

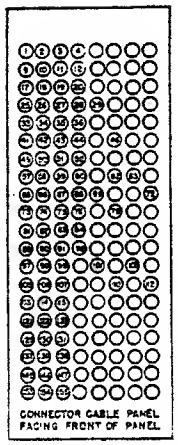

CONNECTOR CABLE PANEL FACING FRONT OF PANEL

FIG 36 10.5

DESCRIPTION	LOCATION
CARD BRUSH	8B
HOPPER CONTACT	8A
UPPER CARD LEVER	8A
LOWER CARD LEVER	8A

CARD FEED (CF) CAMS

NO	LOC	M OR B	TIME	TOL DEG	DURATION	CONTACT AIR GAP	NAME	PART NO
1	1 A	M	[illegible]	±1	50	.012-.018	CF CLUTCH MAGNET PICK	182050
2	1 A	B	254	±1	320	.012-.018	CF CLUTCH MAGNET HOLD	323768
3	1 A	M	240	±2	75	.012-.018	CALCULATOR INTRLK HOLD	182075
4	1 A	M	210	±2	300	.012-.018	END OF CARDS INTRLK HOLD	182300
5	1 A	B	220	±2	300	.012-.018	CALCULATOR INTRLK PICK	182300
6	1 B	M	170	±2	50	.012-.018	END OF CARDS INTRLK PICK	182050
7	3 A	M	230	±2	50	.012-.018	DIBIT TRANSFER	182050
8	3 A	M	181	±1	38	.012-.018	X-R TIMER	[illegible]
9	3 A	B	[illegible]	±1	332	.012-.018	PILOT BEL CONTROL HOLD	[illegible]
10	3 A	M	[illegible]	±1	50	.012-.018	PILOT BEL SELECT	[illegible]
11	3 A	M	[illegible]	±1	30	.012-.018	[illegible]	[illegible]
12	4 A	M	5	±2	275	.012-.018	PILOT BEL CONTROL HOLD	152275
13	5 A	M	18	±1/2	14	.012-.018	SPLIT COL HALF AFTER 9	182014
14	5 A	M	38	±1/2	14	.012-.018	SPLIT COL HALF AFTER 8	182014
15	3 A	M	54	±1/2	14	.012-.018	SPLIT COL HALF AFTER 7	182014
16	5 A	M	72	±1/2	14	.012-.018	SPLIT COL HALF AFTER 6	182014
17	5 A	M	90	±1/2	14	.012-.018	SPLIT COL HALF AFTER 3	182014
18	5 A	M	108	±1/2	14	.012-.018	SPLIT COL HALF AFTER 4	182014
19	5 A	M	128	±1/2	14	.012-.018	SPLIT COL HALF AFTER 5	182014
20	5 A	M	144	±1/2	14	.012-.018	SPLIT COL HALF AFTER 2	182014
21	5 A	M	162	±1/2	14	.012-.018	SPLIT COL HALF AFTER 1	182014
22	5 A	M	180	±1/2	14	.012-.018	SPLIT COL HALF AFTER 0	182014
23	5 A	M	188	±1/2	14	.012-.018	SPLIT COL HALF AFTER 11	182014
24	5 A	B	218	±1	218	.012-.018	CARD CYCLES	182218
25	6 A	B	218	±1/2	218	.012-.018	BRUSH ISOLATION	182216
26	6 A	B	225	±1	333	.012-.018	CARD LEVER HOLD	182333
27	6 A	M	220	±1	50	.012-.018	CARD LEVER PICK	182050
28	6A	B	225	±1	50	.012-.018	HOPPER CONTACT RELAY HOLD	182050
29								
30								
31	7 A	B	250	±1	300	.012-.018	CALCULATOR INTLK HOLD	182300
32	7 A	B	250	±1	300	.012-.018	AUTO START & FEED HOLD	182300
33	8 A	M	SEE	±1/4	SEE	.012-.018	MAIN C B IMPULSES	323768
34	8 A	B	CHART	±1/2	CHART	.027-.033	MAIN C B IMPULSES	323785
35	7 A	M	4	±1	218	.012-.018	UPPER READING CONTROL	182218
36	8 A	B	254	±1	12	.012-.018	END OF RECORD SET	182012
37	8 A	M	4	±1	218	.012-.018	LOWER READING CONTROL	182216
38	8 A	B	250	±1	250	.012-.018	RESET DISCONNECT HOLD	182250
39	7 B	B	21	±1	14	.012-.018	END OF FILE SET	182014
40	8 A	B	100	±1	250	.012-.018	LOWER CARD LEVER HOLD	182250
41	7 B	M	25	±1	14	.012-.018	END OF FILE RESET	182014
42								
43								
44	5 B	M	5	±1	342	.012-.018	SELECT READER THY HOLD	182342
45	5 B	B	500	±1	500	.012-.018	DISCONNECT THY HOLD	182300
46	7 A	M	SEE	±1/2	SEE	.012-.018	CB SIGNAL TGR SET	182369
47	7 A	B	CHART	±1/2	CHART	.027-.033	CB SIGNAL TGR SET	182369
48	7 A	M	SEE	±1/2	SEE	.012-.018	ENTRY & CB SIG TGR RESET	323765
49	7 A	B	CHART	±1/2	CHART	.027-.033	ENTRY & CB SIG TGR RESET	323765
50	7 B	M	238	±1	14	.012-.018	END OF RECORD SET	182014
51	7 A	M	[illegible]	±1/2	[illegible]	.012-.018	RESET CB FILTER	323765
52	7 A	M	10	±1	14	.012-.018	CB SIGNAL TGR SET-AUXILIARY	182014

FIG 37 10.5

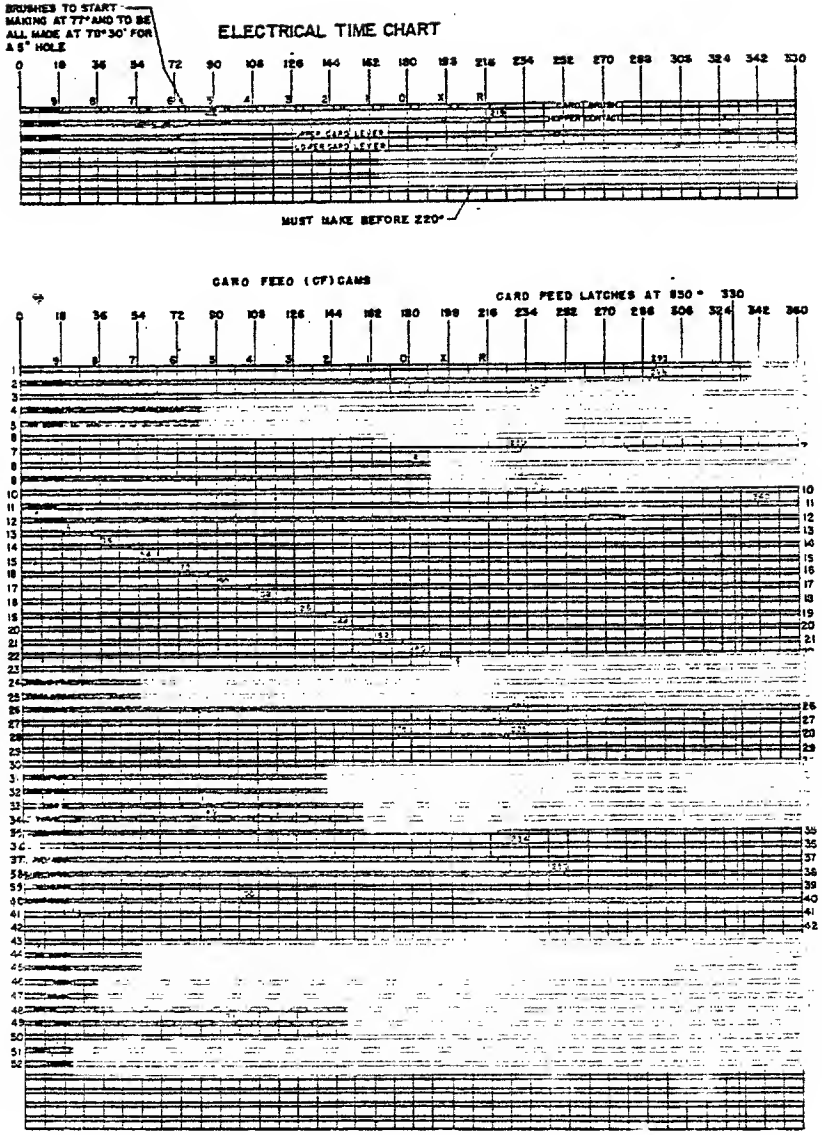

STANDARDS CODE	RELEASE FOR ASSEM	DTT	DATE	CHANGE NO
NONE	513301	513305	4-29-55	242084
			6-10-55	241159
			11-18-55	242084
			9-18-56	243085
			10-16-56	243240

SHEET 4 OF 6

WAS 704-2018

513305

NOTE: X PRINT TO ENG SPEC 895291

FIG 34 10.5
711 MOD 2

WIRE CONTACT RELAYS

RELAY NO	COILS PU1	COILS PU2	COILS H	CONTACT POINTS 1	2	3	4	5	6	7	8	9	10	11	12	NAME	SIZE	TYPE	RELAY NO
20	6B			8A	6A	8A	8A									DISCONNECT	6	(W)	20
39	4A		4A	4A	3A											PILOT SELECTOR NO.1 11-12-PU CONTROL	4	(L)	39
40	4A		4A	4A	3A											PILOT SELECTOR NO.1 9-12-PU CONTROL	4	(L)	40
41	4A		4A	4A	3A	3B	3B									PILOT SELECTOR NO.1 TRANSFER	4	(L)	41
42	NS															PILOT SELECTOR NO.2 11-12-PU CONTROL	4	(L)	42
43	NS															PILOT SELECTOR NO.2 8-12-PU CONTROL	4	(L)	43
44	NS															PILOT SELECTOR NO.2 TRANSFER	4	(L)	44
45	NS															PILOT SELECTOR NO.3 11-12-PU CONTROL	4	(L)	45
46	NS															PILOT SELECTOR NO.3 9-12-PU CONTROL	4	(L)	46
47	NS															PILOT SELECTOR NO.3 TRANSFER	4	(L)	47
48	NS															PILOT SELECTOR NO.4 11-12-PU CONTROL	4	(L)	48
49	NS															PILOT SELECTOR NO.4 9-12-PU CONTROL	4	(L)	49
50	NS															PILOT SELECTOR NO.4 TRANSFER	4	(L)	50
51	NS															PILOT SELECTOR NO.5 11-12-PU CONTROL	4	(L)	51
52	NS															PILOT SELECTOR NO.5 9-12-PU CONTROL	4	(L)	52
53	NS															PILOT SELECTOR NO.5 TRANSFER	4	(L)	53
54	NS															PILOT SELECTOR NO.6 11-12-PU CONTROL	4	(L)	54
55	NS															PILOT SELECTOR NO.6 9-12-PU CONTROL	4	(L)	55
56	NS															PILOT SELECTOR NO.6 TRANSFER	4	(L)	56
57	NS															PILOT SELECTOR NO.7 11-12-PU CONTROL	4	(L)	57
58	NS															PILOT SELECTOR NO.7 9-12-PU CONTROL	4	(L)	58
59	NS															PILOT SELECTOR NO.7 TRANSFER	4	(L)	59
60	NS															PILOT SELECTOR NO.8 11-12-PU CONTROL	4	(L)	60
61	NS															PILOT SELECTOR NO.8 9-12-PU CONTROL	4	(L)	61
62	NS															PILOT SELECTOR NO.8 TRANSFER	4	(L)	62
63	NS															PILOT SELECTOR NO.9 11-12-PU CONTROL	4	(L)	63
64	NS															PILOT SELECTOR NO.9 9-12-PU CONTROL	4	(L)	64
65	NS															PILOT SELECTOR NO.9 TRANSFER	4	(L)	65
66	4A		4A	4A	3A											PILOT SELECTOR NO.10 11-12-PU CONTROL	4	(L)	66
67	4A		4A	4A	3B											PILOT SELECTOR NO.10 9-12-PU CONTROL	4	(L)	67
68	4A		4B	4B	3A	NS	NS									PILOT SELECTOR NO.10 TRANSFER	4	(L)	68
74	2B		2B	2B	1B											CLUTCH CONTROL	4	(B)	74
75	4B		4B	4B	3B	3B	3B	4B	4B							CO-SELECTOR NO.1	6	(N)	75
78	4B		4B	4B	NS	NS	NS	NS	NS							CO-SELECTOR NO. 2	6	(N)	76
78	NS															CO-SELECTOR NO.3	6	(N)	78
79	NS															CO-SELECTOR NO.4	6	(N)	79
81	NS															CO-SELECTOR NO.5	8	(N)	81
82	NS															CO-SELECTOR NO.6	6	(N)	82
84	NS															CO-SELECTOR NO.7	8	(N)	84
85	NS															CO-SELECTOR NO.8	8	(N)	85
87	NS															CO-SELECTOR NO.9	6	(N)	87
88	NS															CO-SELECTON NO.10	6	(N)	88
90	4B		4B	4B	NS	NS	NS	NS	NS							CO-SELECTOR NO.11	6	(N)	90
91	4B		4B	4B	NS	NS	NS	NS	NS							CO-SELECTOR NO.12	6	(N)	91
93	4B			4A	NS	NS	NS	NS	NS	NS	NS	NS	4A			X-R TIMER	12	(P)	93
98	4B			4A	NS	NS	NS	NS	NS	NS	NS	NS	4A			DIGIT TRANSFER	12	(P)	96
108	7A			8B	NS	NS	NS	NS	NS	NS	NS	NS	NS	NS	NS	BRUSH ISOLATION	12	(H)	108
111	7B			NS	NS	NS	NS	NS	8B	NS	NS	NS	NS	NS	NS	BRUSH ISOLATION	12	(H)	111
114	7B			NS	NS	NS	NS	NS	NS	NS	NS	NS	NS	NS	NS	BRUSH ISOLATION	12	(H)	114
117	7B			NS	NS	NS	NS	NS	NS	NS	NS	NS	NS	NS	NS	BRUSH ISOLATION	12	(H)	117
120	7B			NS	NS	NS	NS	8B	NS	NS	NS	NS	NS	NS	NS	BRUSH ISOLATION	12	(H)	120
123	7B			NS	NS	NS	NS	NS	NS	NS	NS	NS	NS	NS	NS	BRUSH ISOLATION	12	(H)	123
126	7B			NS	NS	NS	NS	NS	NS	NS	8B					BRUSH ISOLATION	12	(H)	126

513305 E.C. 243240

NOTE:	INTERNATIONAL BUSINESS MACHINES CORP.
MACH	CARD READER
MODEL	711 MOD 2
NAME	WIRING DIAGRAM & TIMING CHART
DRAWN	JAG 3-30-55
CHECK	JWL 4-4-55
APPROV	CJB 4-22-55
SCALE	NONE

ALIGNMENT WITHIN: CONCENTRIC WITHIN; FLAT WITHIN; PARALLEL WITHIN; OPEN GAT WITHIN; SQUARE WITHIN

TOLERANCE UNLESS OTHERWISE NOTED: DECIMALS ±; FRACTIONS ±; ANGLES ±; CORNERS ±; BORDER INSIDE

MATERIAL SPECIFICATION NO.

CASE DEPTH; HARDNESS; SURFACE TREATMENT

513305

513305

DATE	CHANGE NO
6-29-55	240841
6-10-55	241159
11-18-55	242084
9-18-56	243085
10-16-56	243240

STANDARDS CODE NONE | REVISED PER ISSUE 513301 | DIV

SHEET 5 OF 6

WAS 704-2018

513305

NOTE
X PRINT TO ENG SPEC 895291

FIG 35 10.5
711 MOD 2

RELAY GATES

LEFT GATE (NO 1) DUO RELAYS

1	2	3	4	5	6	7	8	9	10	11	12	13	14	15	16	17	18	19
127700	127700	127700	122532	124843	127700	124843	127050	124843	127700	124843	127700	127700	157747	127879	121058	111354	111354	111354

20	21	22	23	24
107558*	111351	127700	127700	124843

* NO. 20 IS A WIRE CONTACT RELAY

HINGE END

REAR GATE (NO 2) WIRE CONTACT RELAYS

39	40	41	42	43	44	45	46	47	48	49	50	51	52	53	54	55	56	57	58	59	60	61	62	63	64	65	66	67	68
L	L	L	L	L	L	L	L	L	L	L	L	L	L	L	L	L	L	L	L	L	L	L	L	L	L	L	L	L	L

74	75	76	78	79	81	82	84	85	87	88	90	91	93	96
S	M	N	N	M	N	N	N	N	N	N	N	N	P	P

100Ω RESISTOR

108	111	114	117	120	123	126
H	H	H	H	H	H	H

C5 C4 C3 C2 C1

WIRE CONTACT RELAYS

CODE	SIZE	COILS	COIL NO	ASSEM NO	NAME
A	FOUR	ONE	198881	198206	STANDARD
B	FOUR	TWO	198884	198207	STANDARD
C	FOUR	TWO	198867	196208	HIGH RESISTANCE HOLD
D					
E	FOUR	THREE	168259 186280 188893	186698	HIGH SPEED PICKUP
F	SIX	ONE	198882	196196	STANDARD
G	SIX	TWO	158885	196197	STANDARD
H	TWELVE	ONE	159982	198166	STANDARD
J	TWELVE	TWO	198887	198187	STANDARD
K					
L	FOUR	TWO	228881	104753	HIGH SPEED PICKUP
M	SIX	ONE	107559	107588	HIGH SPEED PICKUP
N	SIX	TWO	107566	107580	HIGH SPEED PICKUP
P	TWELVE	ONE	107557	107556	HIGH SPEED PICKUP
Q	TWELVE	TWO	106386	108388	HIGH SPEED PICKUP

513305 E.C.243240

INTERNATIONAL BUSINESS MACHINES CORP
MACH CARD READER MODEL 711 MOD 2
NAME WIRING DIAGRAM & TIMING CHART
DRAWN NAG 3-30-55 SCALE NONE
CHECK JWL 4-4-55 TRAC
APPRD CLB 4-22-55 CHECK

NOTE I | NOTE II | NOTE III | NOTE IV | NOTE V | NOTE VI | NOTE VII

ALIGNMENT WITHIN
CONCENTRIC WITHIN
FLAT WITHIN
PARALLEL WITHIN
STRAIGHT WITHIN
SQUARE WITHIN
TOT IND READING
IN
INCHES

TOLERANCE UNLESS OTHERWISE NOTED
DECIMALS
FRACTIONS
ANGLES
CORNERS BROKEN
OUTSIDE
INSIDE

MATERIAL | SPECIFICATION NO | SURFACE TREATMENT

SPEC NO | TECH REVISION | DATE

513305

FIG 36 10.5

WAS 704-2018

STANDARDS CODE	RELEASED FOR ASSEM.	QTY	
NONE	513301		513305

SHEET 6 OF 6

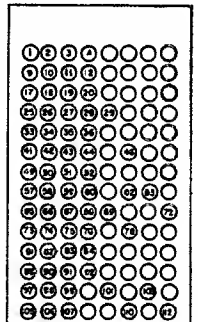

CONNECTOR CABLE PANEL FACING FRONT OF PANEL

DESCRIPTION	LOCATION
CARD BRUSH	8B
HOPPER CONTACT	8A
UPPER CARD LEVER	6A
LOWER CARD LEVER	8A
CR CLUTCH BREAKER	26

ELECTRICAL TIME CHART

FIG 37 10.5
711 MOD 2

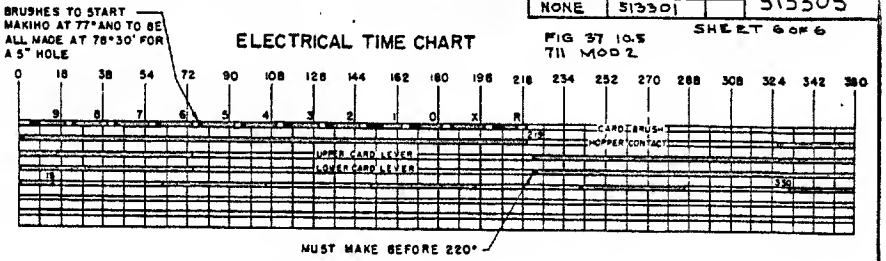

CARD FEED (CF) CAMS

NO	LOC	M OR B		TOL DEG	OUR-ATION	CONTACT AIR GAP	NAME	PART NO
1	1 A	M		±1	85	.012 - .018	CF CLUTCH MAGNET PICK	182083
2	1 A	B		±1	310	.012 - .018	CF CLUTCH MAGNET HOLD	182310
3	1 A	M		±2	75	.012 - .018	CALCULATOR INTRLK HOLD	182073
4	1 A	M		±2	300	.012 - .018	END OF CARDS INTRLK HOLD	182300
5	1 A	B		±2	300	.012 - .018	CALCULATOR INTRLK PICK	182300
6	1 B	M		±2	50	.012 - .018	END OF CARDS INTRLK PICK	182050
7	3 A	M		±2	50	.012 - .018	DIGIT TRANSFER	182050
8	3 A	M		±1	36	.012 - .016	X - R TIMER	182036
9	3 A	B		±1	333	.012 - .018	PILOT B CO-SEL HOLD	182333
10	3 A	M		±1	20	.012 - .018	PILOT SELECTOR PICK	182020
11	3 A	M		±1	38	.012 - .018	COUPLING EXIT	182038
12	4 A	M		±2	275	.012 - .016	PILOT SEL CONTROL HOLD	182275
13	5 A	M		±1/2	14	.012 - .018	SPLIT COL HALF AFTER 9	182014
14	3 A	M		±1/2	14	.012 - .018	SPLIT COL HALF AFTER 8	182014
15	3 A	M		±1/2	14	.012 - .018	SPLIT COL HALF AFTER 7	182014
16	5 A	M		±1/2	14	.012 - .018	SPLIT COL HALF AFTER 6	182014
17	5 A	M		±1/2	14	.012 - .018	SPLIT COL HALF AFTER 5	182014
18	5 A	M		±1/2	14	.012 - .018	SPLIT COL HALF AFTER 4	182014
19	3 A	M		±1/2	14	.012 - .016	SPLIT COL HALF AFTER 3	182014
20	5 A	M		±1/2	14	.012 - .018	SPLIT COL HALF AFTER 2	182014
21	5 A	M		±1/2	14	.012 - .018	SPLIT COL HALF AFTER 1	182014
22	3 A	M		±1/2	14	.012 - .016	SPLIT COL HALF AFTER 0	182014
23	5 A	M		±1/2	14	.012 - .016	SPLIT COL HALF AFTER 11	182014
24	5 A	B		±1	216	.012 - .018	CARD CYCLES	182216
25	6 A	B		±1/2	218	.012 - .018	BRUSH ISOLATION	182216
26	6 A	B		±1	333	.012 - .018	CARD LEVER HOLD	182333
27	6 A	M		±1	50	.012 - .018	CARD LEVER PICK	182050
28	6A	B		±1	30	.012 - .016	HOPPER CONTACT RELAY HOLD	182080
29								
30								
31	7 A	B		±1	300	.012 - .018	CALCULATOR INTLK HOLD	182300
32	7 A	B		±1	320	.012 - .018	AUTO START & FEED HOLD	323766
33	8 A	M		±0 1/2	SEE	.012 - .018	MAIN C B IMPULSES	323785
34	8 A	B		±0 1/2	CHART	.027 - .033	MAIN C B IMPULSES	323765
35	7 A	M		±1	216	.012 - .018	UPPER READING CONTROL	182216
36	8 A	B		±1	12	.012 - .018	END OF RECORD SET	182012
37	8 A	M		±1	218	.012 - .018	LOWER READING CONTROL	182218
38	8 A	B		±1	250	.012 - .018	RESET DISCONNECT HOLD	182250
39	7 B	B		±1	14	.012 - .018	END OF FILE SET	182014
40	8 A	B		±1	250	.012 - .018	LOWER CARD LEVER HOLD	182230
41	7 B	M		±1	14	.012 - .016	END OF FILE RESET	182014
42								
43								
44	5 B	M		±1	342	.012 - .018	SELECT READER THY HOLD	182342
45	5 B	B		±1	300	.012 - .018	DISCONNECT THY HOLD	182300
46	7 A	M		±0 1/2	SEE	.012 - .018	CB SIGNAL TGR SET	182389
47	7 A	B		±0 1/2	CHART	.027 - .033	CB SIGNAL TGR SET	182389
48	7 A	M		±0 1/2	SEE	.012 - .018	ENTRY & CB SIG TGR RESET	323785
49	7 A	B		±0 1/2	CHART	.027 - .033	ENTRY & CB SIG TGR RESET	323765
50	7 B	M		±1	14	.012 - .018	END OF RECORD SET	182014
51	7 A	M		±1/2	SEE CHART	.012 - .018	RESET CB FILTER	323765
52	7 A	M		±1	14	.012 - .018	CB SIGNAL TGR SET - AUXILIARY	182014

CARD FEED (CF) CAMS

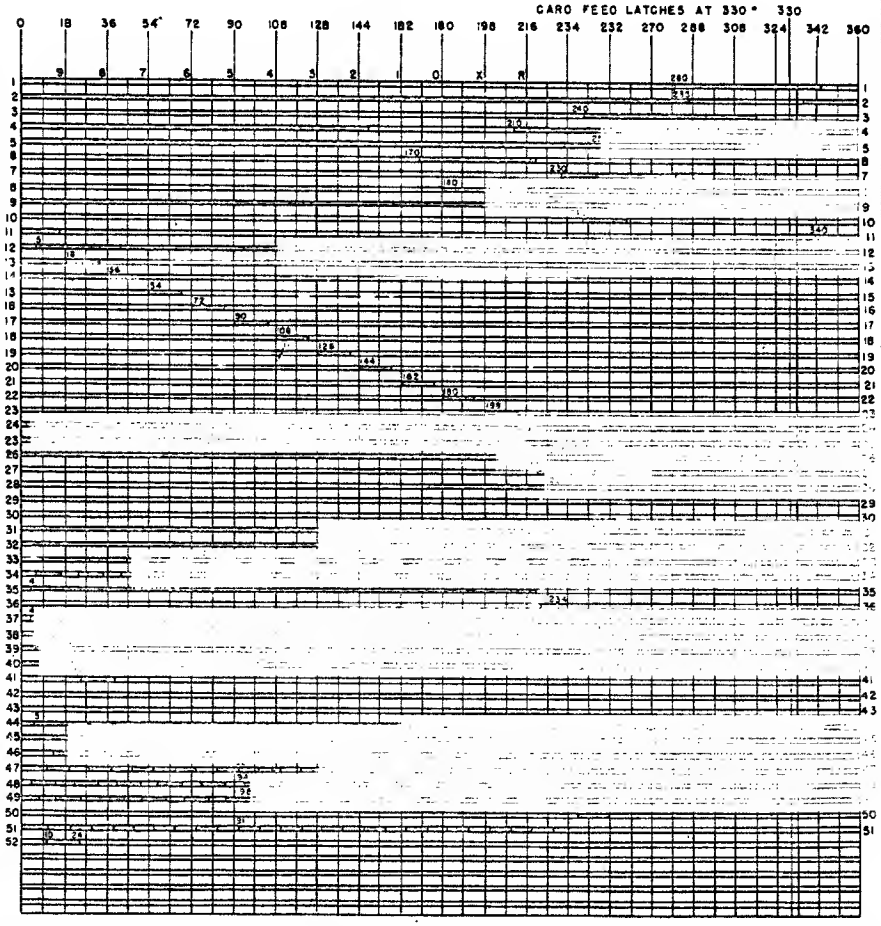

NOTE X PRINT TO EXA. SPEC.	DATE	CHANGE NO.	DATE	CHANGE NO.	DATE	CHANGE NO.			
895291	4-29-55	240841	[illegible]	240842			DRAWN	JAG	3-31-55
	6-10-55	241139					CHECK	JLL	4-4-55
	11-18-55	242084					APPRO.	CLB	4-22-55
	9-18-58	243085					REDRAWN	[illegible]	[illegible]
							CHECK	RTL	7-23-58

INTERNATIONAL BUSINESS MACHINES CORP.

CARD READER

711 MOD 2

WIRING DIAGRAM & TIMING CHART

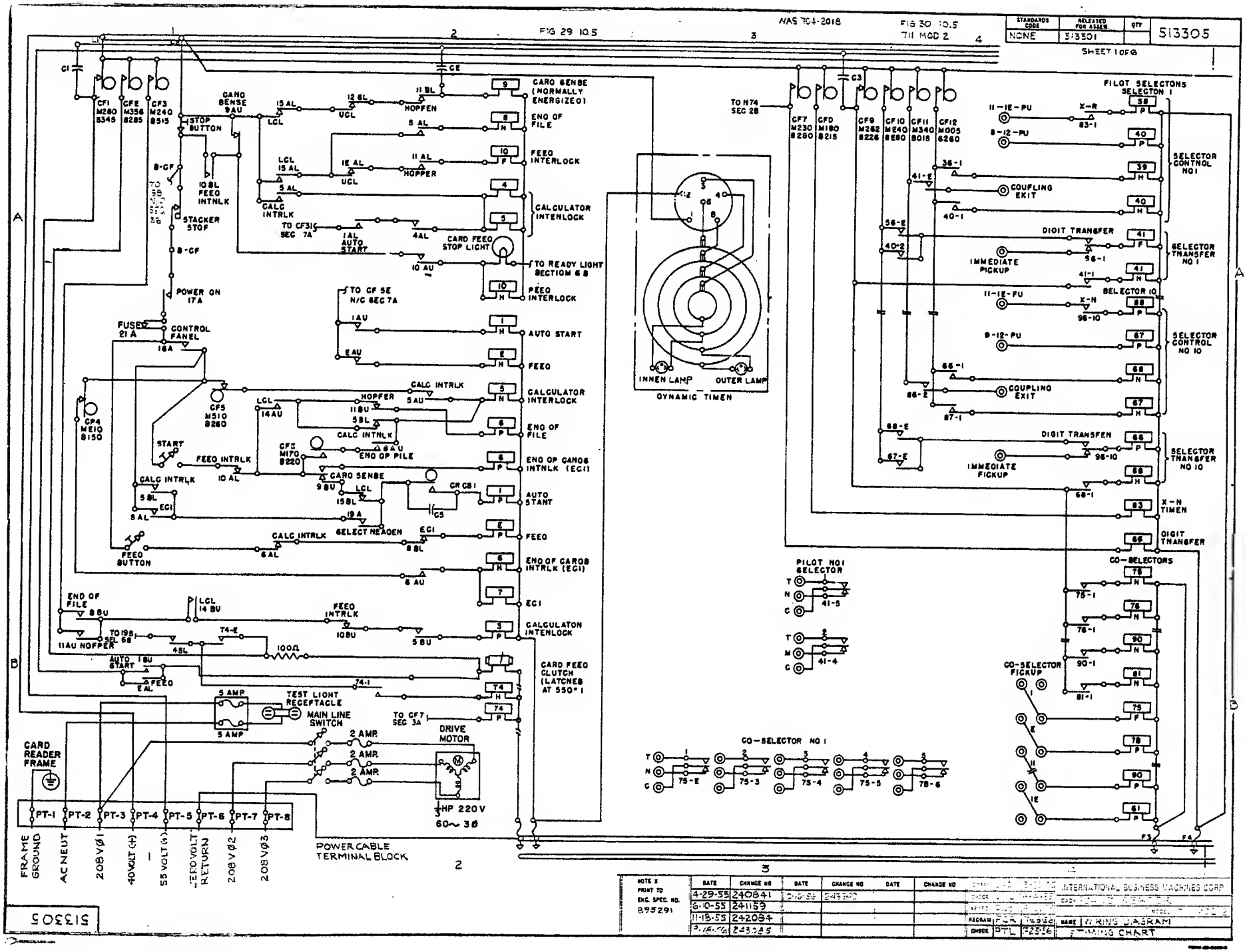
FIG 29 10.5
NAS 704-2018
FIG 30 10.5
711 MOD 2
STANDARDS CODE
NONE
RELEASED FOR ASSEM.
513301
QTY
513305
SHEET 1 OF 6
CARD SENSE (NORMALLY ENERGIZED)
END OF FILE
FEED INTERLOCK
CALCULATOR INTERLOCK
CARD FEED STOP LIGHT
TO READY LIGHT SECTION 6 8
AUTO START
FEED
END OF CARDS INTRLK (EGI)
EGI
CARD FEED CLUTCH (LATCHES AT 550 # 1
STOP BUTTON
STACKER STOP
POWER ON 17A
FUSE 21 A
CONTROL PANEL
START
FEED BUTTON
TEST LIGHT RECEPTACLE
MAIN LINE SWITCH
DRIVE MOTOR
1 HP 220 V 60~ 3Ø
CARD READER FRAME
PT-1 PT-2 PT-3 PT-4 PT-5 PT-6 PT-7 PT-8
FRAME GROUND
AC NEUT
208 VØ1
40 VOLT (+)
55 VOLT (-)
ZERO VOLT RETURN
208 VØ2
208 VØ3
POWER CABLE TERMINAL BLOCK
DYNAMIC TIMER
INNER LAMP
OUTER LAMP
PILOT SELECTORS SELECTOR 1
SELECTOR CONTROL NO 1
SELECTOR TRANSFER NO 1
SELECTOR CONTROL NO 10
SELECTOR TRANSFER NO 10
COUPLING EXIT
DIGIT TRANSFER
IMMEDIATE PICKUP
X-N TIMER
CO-SELECTORS
CO-SELECTOR PICKUP
PILOT NO 1 SELECTOR
CO-SELECTOR NO 1
INTERNATIONAL BUSINESS MACHINES CORP
WIRING DIAGRAM
WIRING CHART
513305

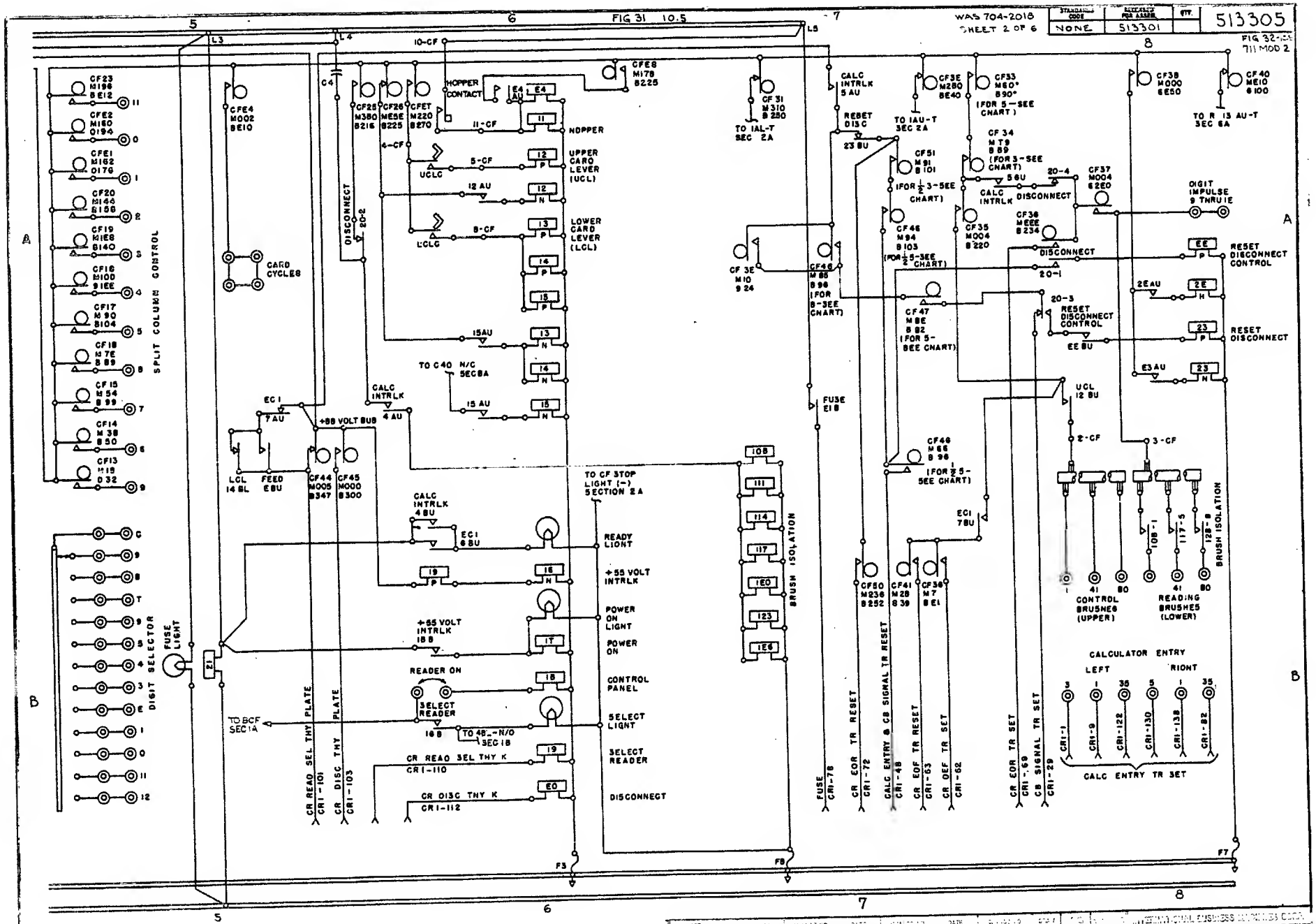
FIG 31 10.5
WAS 704-2018
SHEET 2 OF 6
NONE
513301
513305
FIG 32-105
711 MOD 2
SPLIT COLUMN CONTROL
DIGIT SELECTOR
FUSE LIGHT
CARD CYCLES
HOPPER CONTACT
HOPPER
UPPER CARD LEVER (UCL)
LOWER CARD LEVER (LCL)
DISCONNECT
CALC INTRLK
+88 VOLT BUS
READY LIGHT
+55 VOLT INTRLK
POWER ON LIGHT
POWER ON
READER ON
SELECT READER
CONTROL PANEL
SELECT LIGHT
SELECT READER
DISCONNECT
BRUSH ISOLATION
CONTROL BRUSHES (UPPER)
READING BRUSHES (LOWER)
CALCULATOR ENTRY
LEFT
RIGHT
CALC ENTRY TR SET
RESET DISCONNECT CONTROL
RESET DISCONNECT
DIGIT IMPULSE 9 THRU 1E
CR READ SEL THY PLATE
CR DISC THY PLATE
CR EOR TR RESET
CALC ENTRY & CB SIGNAL TR RESET
CR EOF TR RESET
CR OEF TR SET
CR EOR TR SET
CB SIGNAL TR SET
FUSE

STANDARD CODE	RELEASED FOR ASSEM	REV
NONE	513301	

SHEET 3 OF 6

513305

DATE	CHANGE NO
4-29-55	240841
6-10-58	241159
11-18-55	242084
9-18-56	243065
10-14-56	243240

WAS 704-2018

513305

NOTE:
X PRINT TO ENG SPEC 895291

FIG 33 10.5
711 MOD 2

DUO RELAYS

RELAY NO	COILS PU	COILS PL	COILS N	CONTACT POINTS A	AU	AC	AL	B	BU	BC	BL	NAME	PART NO	TYPE
1	2B		2A		2A		2A		1B			AUTO START	127700	D
2	2B		2A		2A		2B		5B			FEED	127700	D
3	2B		2A		2A		1A		2B		1B	CALCULATOR INTERLOCK	127700	D
4	2A				6A		2A		6D			CALCULATOR INTERLOCK	122532	S
5	2A				7A		1B		8A		2A	CALCULATOR INTERLOCK	124843	S
6	2B		2B		2B		1B		6B		2B	END OF CARDS INTERLOCK	127700	D
7	2B				3A				7B			END OF CARDS INTERLOCK	124843	S
8	2A		2A		2B		2A		1B			END OF FILE	127050	D
9	2A				1A				2B			CARD SENSE	124843	S
10	2A		2A		2A		1B		2D		1A	FEED INTERLOCK	127700	D
11	6A				1B		2A		2A		2A	HOPPER	124843	S
12	6A		6A		8A		2A		8A		2A	UPPER CARD LEVER	127700	D
13	8A		8A		8A		1A				2B	LOWER CARD LEVER	127700	D
14	6A		6A		1A				1B		5B	LOWER CARD LEVER	157747	D
15	6A		6A		8A		1A					LOWER CARD LEVER	127675	D
16	8B		6B					6B				55 VOLT SUPPLY INTERLOCK	121058	D
17	6B			1A								POWER ON	111354	S
18	6B			1A								CONTROL PANEL	111354	S
19	6B			2B				6D				SELECT READER	111354	S
21	5B			1A				7A				FUSE	111351	S
22	8A		8A		8A				8A			RESET DISCONNECT CONTROL	127700	D
23	8A		8A		8A				7A			RESET DISCONNECT	127700	D
24	6A				6A							HOPPER CONTACT RELAY HOLD	124843	S

513305 E.C.243240

MATERIAL SPECIFICATION NO	TOLERANCE UNLESS OTHERWISE NOTED	ALIGNMENT WITHIN	NOTE I
	DECIMALS	CONCENTRIC WITHIN	TOT IND READING NOTE II
CASE DEPTH	FRACTIONS	FLAT WITHIN	NOTE III
HARDNESS	ANGLES	PARALLEL WITHIN	NOTE IV
SURFACE TREATMENT	COARSES OUTSIDE	STRAIGHT WITHIN	NOTE V
	BROKEN INSIDE	SQUARE WITHIN	IN INC-IS NOTE VI

INTERNATIONAL BUSINESS MACHINES CORP

MACH CARD READER MODEL 711 MOD2

NAME WIRING DIAGRAM & TIMING CHART

DRAW JAG 3-30-55 SCALE NONE
CHECK JW 4-4-55 TRAC
APPRO CD 4-7-55 CHECK

513305

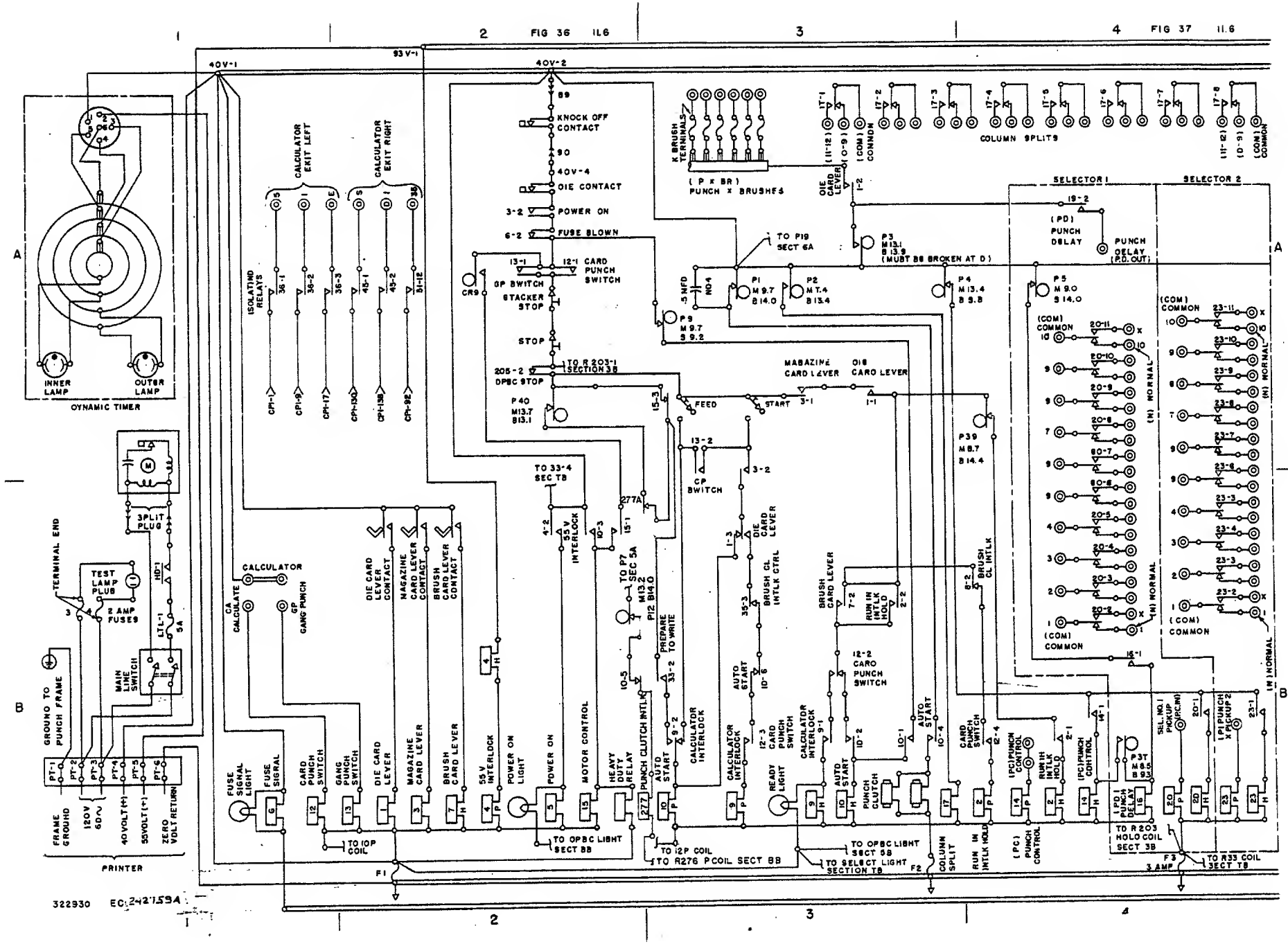
FIG 36 11.6
FIG 37 11.6
40V-1
93V-1
40V-2
89
KNOCK OFF CONTACT
90
40V-4
DIE CONTACT
POWER ON
FUSE BLOWN
CARD PUNCH SWITCH
GP SWITCH
STACKER STOP
STOP
TO R 203-1 SECTION 3B
DPBC STOP
CR9
P40 M13.7 B13.1
CALCULATOR EXIT LEFT
CALCULATOR EXIT RIGHT
ISOLATING RELAYS
CPI-1
CPI-9
CPI-17
CPI-130
CPI-139
CPI-92
INNER LAMP
OUTER LAMP
DYNAMIC TIMER
3PLIT PLUG
TERMINAL END
TEST LAMP PLUG
2 AMP FUSES
MAIN LINE SWITCH
GROUND TO PUNCH FRAME
FRAME GROUND
120V 60~
40VOLT(+)
55VOLT(+)
ZERO VOLT RETURN
PRINTER
CALCULATOR
CA CALCULATE
GP GANG PUNCH
DIE CARD LEVER CONTACT
MAGAZINE CARD LEVER CONTACT
BRUSH CARD LEVER CONTACT
FUSE SIGNAL LIGHT
FUSE SIGNAL
CARD PUNCH SWITCH
GANG PUNCH SWITCH
DIE CARD LEVER
MAGAZINE CARD LEVER
BRUSH CARD LEVER
55 V INTERLOCK
POWER ON LIGHT
POWER ON
MOTOR CONTROL
HEAVY DUTY RELAY
PUNCH CLUTCH INTLK
AUTO START
CALCULATOR INTERLOCK
READY LIGHT
TO 33-4 SEC TB
TO P7 SEC 5A
PREPARE TO WRITE
TO IOP COIL
TO OPBC LIGHT SECT 8B
TO 2P COIL
TO R276 PCOIL SECT 8B
TO OPBC LIGHT SECT 5B
TO SELECT LIGHT SECTION TB
F1
F2
F3
3 AMP
TO R33 COIL SECT TB
K BRUSH TERMINALS
(P x BR) PUNCH x BRUSHES
TO P19 SECT 6A
P3 M13.1 B13.9 (MUST BE BROKEN AT D)
P1 M9.7 B14.0
P2 M7.4 B13.4
P4 M13.4 B9.8
P9 M9.7 B9.2
MAGAZINE CARD LEVER
DIE CARD LEVER
FEED
START
CP SWITCH
BRUSH CL INTLK CTRL
BRUSH CARD LEVER
RUN IN INTLK HOLD
12-2 CARD PUNCH SWITCH
12-3 CARD PUNCH SWITCH
COLUMN SPLIT
COLUMN SPLITS
SELECTOR 1
SELECTOR 2
(PD) PUNCH DELAY
PUNCH DELAY (P.D. OUT)
P5 M9.0 B14.0
P39 M8.7 B14.4
(COM) COMMON
(N) NORMAL
(PC) PUNCH CONTROL
(PCI) PUNCH CONTROL
P3T M8.5 B9.3
1 PCH PUNCH DELAY
TO R203 HOLD COIL SECT 3B
SEL NO. 1 PICKUP (PC IN)
1 (P) PUNCH X PICKUP 2
322930
EC 242 1594

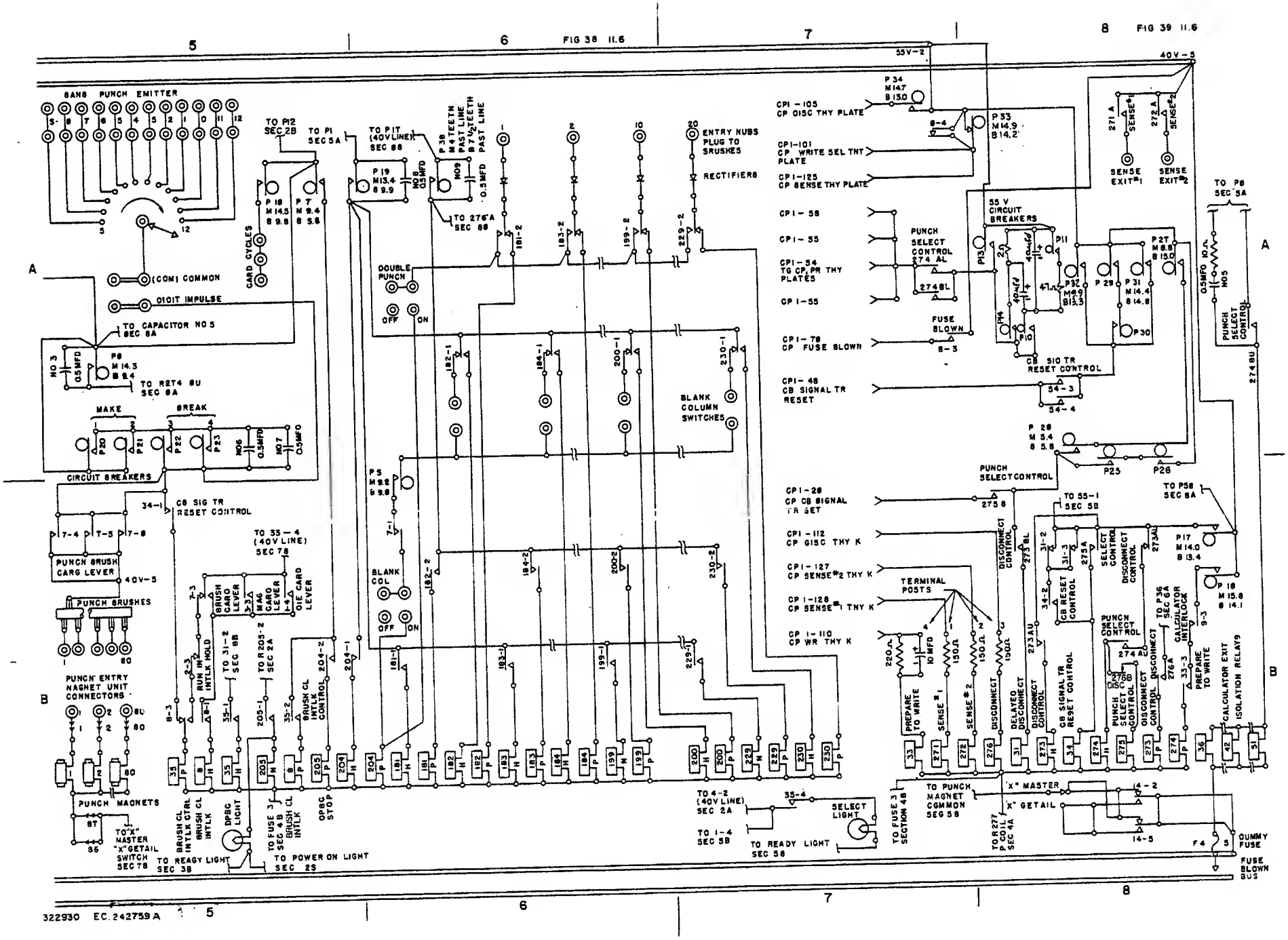

322930 EC.242759 A

322930

SHEET 3 OF 4

CHANGE NO	DATE
3-28-52	29024
5-16-52	29320
11-18-52	30082
12-29-52	50192
2-18-54	51089
6-9-54	51328
6-10-55	241159
2-29-56	242315
6-14-56	242759
10-21-56	242759A

STANDARDS CODE NONE

322930

NOTE: I PRINT TO ENG. SPEC. 895291

REFER TO S.F.I.

FIG 40 11.6

WIRE CONTACT RELAYS

RELAY NO	COILS PU1	PU2	N	CONTACT POINTS 1	2	3	4	5	6	7	8	9	10	11	12	PART NO	NAME	SIZE	TYPE
1	2B			3A	3A	3B	3B									196207	DIE CARD LEVER	4	
2	4B		4B	4B	3B	5B										196208	RUN IN INTLK HOLD	4	
3	2B			3A	3A	5B										196207	MAGAZINE CARD LEVER	4	
4	2B		2B		2B											198207	55 V INTERLOCK	4	
5	2B				2A											196207	POWER ON	4	
6	1B				2A	7A										196207	FUSE SIGNAL	4	
7			2B	6B	3B	5B	5B	5B	5B							196187	BRUSH CARD LEVER	8	
8	5B		5B	5B	4B	5B										196208	BRUSH CL INTERLOCK	4	
9	3B		3B	3B	3B	6B	7A									196207	CALCULATOR INTERLOCK	4	
10	3B		3B	3B	3B	2B	3B	2B	3B							196197	AUTO START	6	
12	1B			2A	3B	3B	4B									196207	CARD PUNCH SWITCH	4	
13	2B			2A	3A											198207	CARD PUNCH SWITCH	4	
14	4B		4B	4B	6B	8B										196207	(PC) PUNCH CONTROL	4	
15	2B			2B												196207	MOTOR CONTROL	4	
16	4B			4B	4A											196207	(PD) PUNCH DELAY	4	
17	3B			3A	3A	3A	4A	4A	4A	4A	4A					198186	COLUMN SPLIT	12	
20	4B		4B	4B	4B	4B	4B	4B	4B	4A	4A	4A	4A	4A		196187	SEL. NO.1 (PC IN)	12	
23	4B		4B	4B	4B	4B	4B	4B	4A	4A	4A	4A	4A	4A		196187	SEL. NO.2 (PC IN)	12	
31	8B				8B	8B										107560	DELAYED DISCONNECT	6	
33	7B				3B	8B	7B									196207	PREPARE TO WRITE	4	
34	8B			5B	8B	6A	8A									196207	CB SIG TR RESET CONTROL	4	
35	5B		5B	5B	5B	3B										196207	BRUSH CL INTLK CTRL	4	
38	8B			1A	1A											196187	CALCULATOR EXIT ISOLATION	12	
39																196187		12	
42	8B															196187	CALCULATOR EXIT ISOLATION	12	
45																196187		12	
48																196187		12	
51	8B														2A	196187	CALCULATOR EXIT ISOLATION	12	
181 THRU 200	SEC 8,7															196207 ↓		4 ↓	
204	6B		5B	5B	5B											196207		4	
205	5B		5B	5B	2A											196207	DPBC STOP	4	
211 THRU 230	SEC 7															196207 ↓		4 ↓	

OUO RELAYS

RELAY NO	COILS P	N	CONTACT POINTS A	AU	AL	B	BU	BL	PART NO	NAME	TYPE
271	7B		8A						111351	SENSE EXIT NO 1	S
272	7B		8A						111351	SENSE EXIT NO 2	S
273	8B	8B		8B	8B			8B	127700	DISCONNECT CONTROL	D
274	8B	8B		8B	7A		8A	7A	127700	PUNCH SELECT CONTROL	O
275	8B		8B			8B			111351	PUNCH SELECT CONTROL	S
276	8B		8B			8B			111351	DISCONNECT	S
277	4A		2A						117371	PUNCH CLUTCH INTLK	S

DOUBLE PUNCH AND BLANK COLUMN DETECTION RELAYS

POSITION NUMBER	1	2	3	4	5	6	7	8	9	10	11	12	13	14	15	16	17	18	19	20
POINT RELAY	182	184	186	188	190	192	194	196	198	200	212	214	216	218	220	222	224	226	228	230
POINT RELAY NOLD	182-1	184-1	186-1	188-1	190-1	192-1	194-1	196-1	198-1	200-1	212-1	214-1	216-1	218-1	220-1	222-1	224-1	226-1	228-1	230-1
BLANK COL SWITCH	182-1	184-1	186-1	188-1	190-1	192-1	194-1	196-1	198-1	200-1	212-1	214-1	216-1	218-1	220-1	222-1	224-1	226-1	228-1	230-1
1/2 POINT RELAY PICKUP	182-2	184-2	186-2	188-2	190-2	192-2	194-2	196-2	198-2	200-2	212-2	214-2	216-2	218-2	220-2	222-2	224-2	226-2	228-2	230-2
1/2 POINT RELAY	181	183	185	187	189	191	193	195	197	199	211	213	215	217	219	221	223	225	227	229
1/2 POINT RELAY NOLD	181-1	183-1	185-1	187-1	189-1	191-1	193-1	195-1	197-1	199-1	211-1	213-1	215-1	217-1	219-1	221-1	223-1	225-1	227-1	229-1
DOUBLE PUNCH DETECT	181-2	183-2	185-2	187-2	189-2	191-2	193-2	195-2	197-2	199-2	211-2	213-2	215-2	217-2	219-2	221-2	223-2	225-2	227-2	229-2

322930 EC 242759A

INTERNATIONAL BUSINESS MACHINES CORP.

MACH CARD RECORDER MODEL 721

NAME WIRING DIAGRAM

B TIMING CHART

SCALE

DATE RWP 10-24-51 DRAW EJS 7-22-52

DATE 7-22-52

NOTE I ALIGNMENT WITHIN

NOTE II TOT IND READING

NOTE III

NOTE IV CONCENTRIC WITHIN

NOTE V FLAT WITHIN

NOTE VI PARALLEL WITHIN

NOTE VII STRAIGHT WITHIN

NOTE VIII SQUARE WITHIN

TOLERANCE UNLESS OTHERWISE NOTED

DECIMALS ±

FRACTIONS ±

ANGLES ±

CORNERS OUTSIDE

BROKEN INSIDE

MATERIAL SPECIFICATION NO

CASE DEPTH

HARDNESS

TREATMENT

TREATMENT

TRAC NO

DRAWN

CHECK

APPROV

322930

322930

CAM NO	LOC	MAKE TIME (NOTE 1)	BREAK TIME		TYPE	TOL IN TEETH	COMPONENT NAME	PART NO
P1	3A	9.7	14.0		M	±1/2	PUNCH CLUTCH	182036
P2	3A	7.4	13.4		M	±1/2	COLUMN SPLIT	182075
P3	3A	13.1	13.3		B	±*1/2	PX BRUSH CONTROL	182012
P4	4A	13.4	9.3		M	±*1/2	PX BRUSH HOLD	182325
P5	4A	9.0	14.0		M	±1/2	PX DELAY HOLD	182030
P6	5A	14.3	9.4		B	±1/2	ISOLATION CONTROL	182310
P7	5A	9.4	8.9		B	±1/2	O P B C STOP	182012
P8	8A	3.2	9.8		B	±1/2	BLANK COLUMN CONTROL	182014
P9	3A	9.7	3.2		M	±1/2	AUTO START HOLD	322985
P10	8A				M	±1/2	55V CIRCUIT BREAKERS ARC SUPRESSOR	182366
P11	8A				B	±1/2		182366
P12	2B	13.2	14.0		M	±1/2	AUTO START CONTROL	182020
P13	8A				B	±1/2	55V CIRCUIT BREAKERS	182368
P14	8A				B	±1/2		182366
P15							DO NOT USE THIS POSITION	
P16	6B	13.6	14.1		B	±1/2	PUNCH SELECT CONTROL	182012
P17	6B	14.0	13.4		M	±*1/2	PUNCH SELECT CONTROL HOLD	182345
P18	5A	14.5	9.8		M	±1/2	CARD CYCLES	322967
P19	8A	13.4	9.9		M	±1/2	O P B C SENSE HOLD	322965
P20	5A	SEE CHART			M	±1/2		182366
P21	5A				M	±1/2	PUNCH BRUSH CIRCUIT BREAKERS	182366
P22	5A				B	±1/2		182366
P23	5A				B	±1/2		162366
P24							DO NOT USE THIS POSITION	
P25	6A	SEE CHART			M	±1/2		182368
P26	6A	SEE CHART			B	±1/2		182388
P27	6A	9.5	13.0		M	±*1/2	CB SIGNAL TRIGGER SET	162012
P28	8A	9.4	9.6		B	±*1/2		182012
P29	6A	SEE CHART			M	±1/2		192366
P30	8A				B	±1/2	CB SIGNAL TRIGGER RESET	162368
P31	6A	14.4	14.8		M	±1/2		182012
P32	8A	9.9	13.3		M	±1/2		182012
P33	6A	14.9	14.2		M	±1/2	WRITE AND SENSE THYRATRON PLATES	192342
P34	7A	14.7	13.0		B	±1/2	DISCONNECT THYRATRON PLATE	322987
P35							DO NOT USE THIS POSITION	
P36	8A	SEE CHART			M	±1/4	HALF AFTER (O P B C PICKUP)	182366
P37	4B	8.5	9.3		M	±1/2	PX DELAY PICKUP	162020
								182070
P39	4A	8.7	14.4		M	±1/2	RUN IN INTERLOCK HOLD	182345
P40	2A	13.7	13.1		B	±1/2	PUNCH CLUTCH INTLK	
CR9	2A	SEE	NOTE*				MOTOR CONTROL HOLD	
	2B						CARD BRUSH	
	2B						MAGAZINE C.L.C (LAST CARD)	
	2B						DIE C.L.C (FIRST CARD)	
	2B						DIE C.L.C (LAST CARD)	
	2B						BRUSH C.L.C (FIRST CARD)	
	2B						BRUSH C.L.C (LAST CARD)	

*CONTACT MUST MAKE BEFORE 9 AND BREAK AFTER 14 MAINTAINING THIS CONDITION, TIME BREAK SO MACHINE WILL COAST TO A STOP WITH INDEX NEAR TO BUT NOT LATER THAN 9 WHEN OIL IS WARM

NOTE 1- TOLERENCE IN CAM DURATION IS ± 1/2 TOOTH UNLESS OTHERWISE NOTED

NOTE 2- MINIMUM AIR GAP .012"

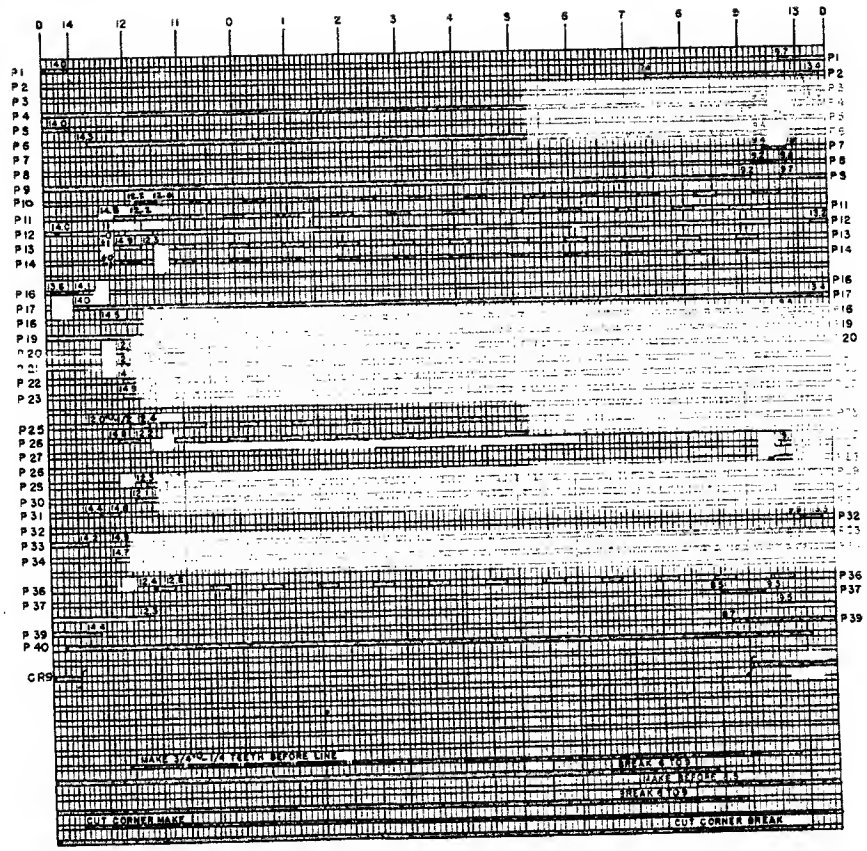

322930 EC12427S9A

FIG 107 12.7

CR CAM CHART

CAM NO.	LOC	NAME	CAM PART NO	STYLE	MAKE TIME	TOL IN DEG	BREAK TIME	TOL IN DEG.
1								
2	10A	PILOT SELECTOR PICKUP	182014	M	515	± 1	330	± 1
3	8A	PILOT SELECTOR COUPLING EXIT	521968	B	550	± 2	195	± 1
4								
5	9A	ALTERATIONS IMPULSE	321978	M	580	± 1	30	± 1
6	4A	EIGHT RELAY CONTROL	782014	M	15	± 1/2	50	± 1/2
7								
8	4A	"N" RELAY CONTROL	321973	M	180	± 1/2	285	± 2
9	4A	OXRN RELAY CONTROL	321873	M	160	± 1/2	285	± 2
10	4A	OXRN RELAY CONTROL (PLUGGABLE)	182030	M	155	± 1/2	185	± 2
11	5A	SKIP END INTERLOCK	162012	M	218	± 1	230	± 1
12	5A	EXTRA SPACE HOLD	321964	B	5	± 1	530	± 1
13	6A	SHORT SKIP HOLD	322868	B	15	± 1	546	± 1
14	6A	EXTRA SPACE CONTROL	182070	M	280	± 1	350	± 1
15	6A	ALL SKIPS HOLD	322967	B	5	± 1	320	± 1
16	10A	SENSE EXIT IMPULSE	321676	B	245	± 1	340	± 1
17	8A	SPACE SUPPRESS HOLD	132179	M	320	± 1	140	± 1
18	6A	SKIP INTERLOCK	322006	M	230	± 1	515	± 1
19	7A	COMMON SPACE CTR. HOLD	321988	B	105	± 1	10	± 1
20	7A	NON-PRINT	321665	B	330	± 1	290	± 1
21	7A	CARRIAGE START SPACE	182014	M	120	± 1	155	± 1
22	7A	CARRIAGE START - SKIP	182020	M	338	± 1	358	± 1
23	8A	PLATEN LOCK MAG	182063	M	276	± 1	541	± 1
24	8A	RIBBON FEED CLUTCH	321976	M	225	± 1	250	± 1
25	2A	DRIVE CLUTCH	521863	B	145	± 1	115	± 1
26	3A	CF CLUTCH MAGNET	521676	M	520	± 1	350	± 1
27	3A	AUTO START HOLD	521964	B	280	± 1	245	± 1
28	5A	AUTO START PICK	321983	M	305	± 1	315	± 1
29	3A	DRIVE CLUTCH RELAY HOLD	182345	B	305	± 1	260	± 1
30	5A	ISOLATION RELAY HOLD	321963	B	545	± 1	315	± 1
31	5A	ISOLATION RELAY PICK	521878	M	520	± 1	550	± 1
32	15B	SYMBOL EXIT (B)	321980	M	CHART	± 1	CHART	± 1
33	15B	SYMBOL EXIT DECIMAL	321981	M	CHART	± 1	CHART	± 1
34	15B	SYMBOL EXIT COMMA	321981	M	CHART	± 1	CHART	± 1
35	12A	ZERO ENTRY	182014	M	138	± 1	153	± 1
36	16A	ASTERISK ENTRY	182014	M	188	± 1	188	± 1
37	12A	MINUS PLUS ENTRY	321678	M	153	± 1	183	± 1
38	13A	IMPULSE DISTRIBUTOR	321862	M	CHART	± 1/4	CHART	± 1/4
39	16A	IMPULSE DISTRIBUTOR	321982	M	CHART	± 1/4	CHART	± 1/4
40	16A	IMPULSE DISTRIBUTOR	321862	M	CHART	± 1/4	CHART	± 1/4
41	18A	IMPULSE DISTRIBUTOR	321862	M	CHART	± 1/4	CHART	± 1/4
42	18A	SENSE THYRATRON BREAK	321982	B	4	± 1	384	± 1
43	16A	ECHO (READ) CB SIGNAL	521875	M	188	± 1	303	± 1
44	18A	"WRITE" CB SIGNAL	321870	B	5	± 1	188	± 1
45	15B	"WRITE" CB SIGNAL RESET	521676	M	175	± 1	200	± 1
46	13B	"READ" CB SIGNAL RESET	321862	M	CHART	± 1/4	CHART	± 0
47	15B	"READ" CB SIGNAL RESET	321862	M	CHART	± 0	CHART	± 1/4
48	13B	"WRITE" CB SIGNAL RESET	321962	M	CHART	± 1/4	CHART	± 0
49	18B	"WRITE" CB SIGNAL RESET	521662	M	CHART	± 0	CHART	± 1/4
50	15A	CB SIGNAL TOR SET (BREAK)	321662	M	CHART	± 1/4	CHART	± 1/4
51	13A	CB SIGNAL TOR SET (BREAK)	521962	M	CHART	± 1/4	CHART	± 1/4
52	4A	OXRC RELAY CONTROL	321977	M	135	± 1/2	180	± 1/2
53	4A	OXRC RELAY CONTROL	321977	M	135	± 1/2	180	± 1/2
54								
55								
56								
57	5B	DISCONNECT CONTROL	321882	M	CHART	± 1/2	CHART	± 1/2
58	5B	DISCONNECT CONTROL	521882	M	CHART	± 1/2	CHART	± 1/2
59	5B	RESET DISCONNECT CONTROL	321682	M	CHART	± 1/2	CHART	± 1/2
61	5B	RESET DISCONNECT CONTROL	321982	M	CHART	± 1/2	CHART	± 1/2
63	5B	OFFSET EMITTER CONTROL	521982	M	CHART	± 1/4	CHART	± 1/2
65	8A	READ IMPULSE DISTRIB	521882	M	CHART	± 1/4	CHART	± 1/2
67	18A	READ IMPULSE DISTRIB	521982	M	CHART	± 1/4	CHART	± 1/2
68	18A	SYMBOL EXIT IMPULSES	521862	M	CHART	± 1/4	CHART	± 1/2
69	13B	SYMBOL EXIT IMPULSES	521982	M	CHART	± 1/4	CHART	± 1/2
71	13B	C E PRINT 8	182012	M	5	± 1	17	± 1
73	14A	C E PRINT 8	182012	M	20	± 1	32	± 1
74	14A	C E PRINT 7	182012	M	35	± 1	47	± 1
75	14A	C E PRINT 6	182012	M	50	± 1	62	± 1
76	14A	C E PRINT 5	182012	M	65	± 1	77	± 1
77	13A	C E PRINT 4	182012	M	80	± 1	92	± 1
78	13A	C E PRINT 3	182012	M	95	± 1	107	± 1
79	13A	C E PRINT 2	182012	M	110	± 1	122	± 1
80	13A	C E PRINT 1	182012	M	125	± 1	137	± 1
81	13A	C E PRINT 0	182012	M	140	± 1	132	± 1
82	14A	C E PRINT 11	182012	M	158	± 1	167	± 1
83	14A	C E PRINT 12	182012	M	170	± 1	182	± 1
84	14A	SPLIT COLUMN EMITTER			CHART	± 0	CHART	± 1

321448 E.C 242767

NOTE: SPLIT COLUMN EMITTER BRUSH TIMING MUST OVERLAP CR65 BY A MAXIMUM OF 8°, MINIMUM OF 2° (4°(1°) BEFORE MAKE, 4°(1°) AFTER BREAK)

FIG 108 12.7

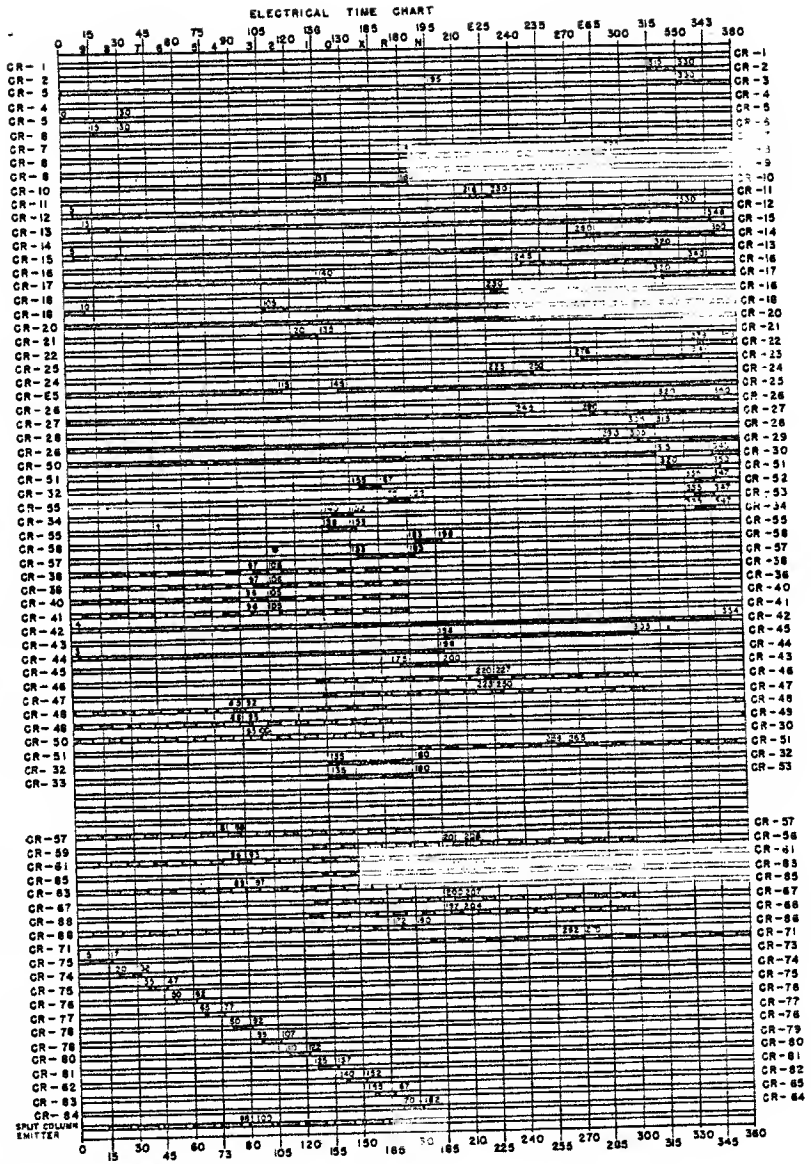

CF CAM CHART

CAM NO	LOC	NAME	CAM PART NO	STYLE	MAKE TIME	TOL IN DEG	BREAK TIME	TOL IN DEG
1								
2	9A	PILOT SELECTOR HOLD	321964	B	320	±1	286	±10
3	5A	PRINT CYCLES IMPULSE	321967	B	355	±2	295	±1
4	9A	CO-SELECTOR HOLD	321966	B	350	±10	235	±20
5	13A	CHAR EMITTER COMMON	182179	M	3	±2	183	±2
6								
7								
8	11A	TYPE WHEEL IMPULSE COMMON	182165	M	123	±2	288	±2
9	11A	TYPE WHEEL IMPULSE COMMON	182165	M	123	±2	288	±2
10								
11	6A	1ST LINE SPACE SUPPRESS	182022	M	215	±1	255	±1
12	7A	COMMON SPACE CONTROL	182014	M	110	±1	125	±1
13								
14	5A	ECHO ISOLATION RELAYS	321971	M	120	±1	290	±1
15	5A	PM SOLO ON RELAY	321970	M	355	±1	190	±1
16	10A	PILOT SELECTOR CTRL HOLD	182345	B	5	±1	360	±1
17								
18								
19								
20								
21	10A	SENSE EXIT HOLD	321974		240	±1	350	±1
22	10A	CO SELECTOR PRINT CYCLES IMPULSE	182014		333	±1	10	±1
23								
24								
25								
26								
27								
28								
29			182014	M	183	±1	198	±1
30	11A	"N" IMPULSE FILTER	182014	M	183	±1	196	±1
31	11A	"N" IMPULSE FILTER	182179	M	3	±1	183	±1
32	15A	PRINT THYRATRON HOLD	182179	M	3	±1	183	±1
33	15A	PRINT THYRATRON HOLD	321982	B	4	±1	354	±1
34	6A	SENSE THYRATRON HOLD	321982	B	4	±1	354	±1
35	16A	READ/WRITE THY HOLD	322005	B	355	±1	300	±1
36	15A	DISCONNECT THY HOLD						

CAM NO.	LOC.	MASTER CB CAM CHART	STYLE	MAKE TIME FOR "S"	TOL IN DEG	BREAK TIME FOR "S"	TOL IN DEG
1,2,4,5	15A	ALL PULSES	M	96	+1/2 -0	103	+1/2 -0
3	15A	DURATION	M	98	±1	105	-1/2 +1/2
6	15A		M	95	+1/2 -0	102	±1

ELECTRICAL TIME CHART

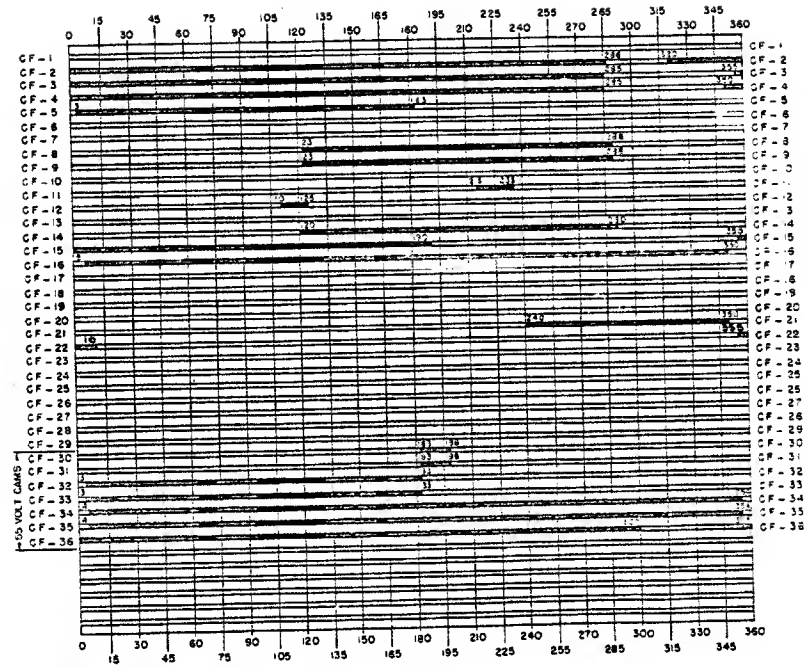

321448 EC 242787

RELAY GATE

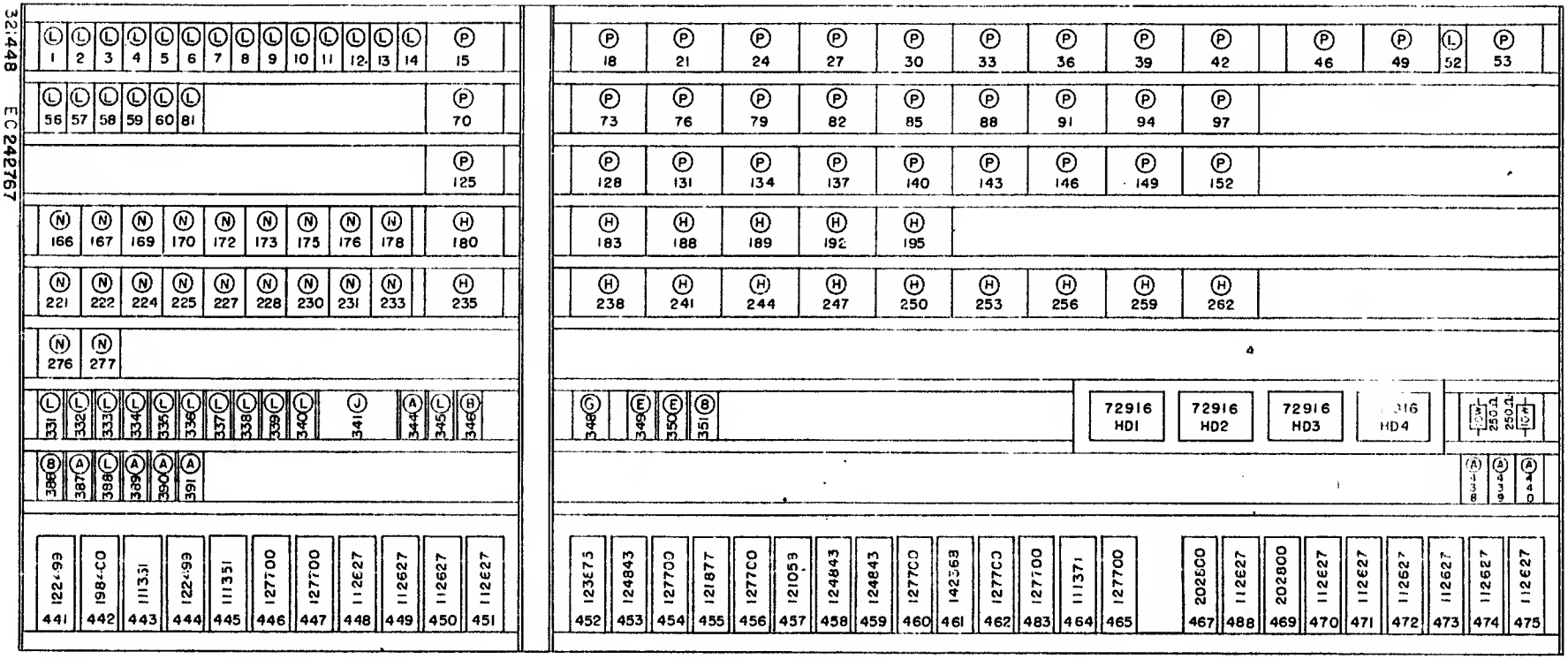

WIRE CONTACT RELAYS

CODE	SIZE	COILS	COIL NO	ASSEM NO	NAME
(A)	FOUR	ONE	198881	196206	STANDARD
(B)	FOUR	TWO	198884	196207	STANDARD
(C)	FOUR	TWO	198887	196208	HIGH RESISTANCE HOLD.
(D)					
(E)	FOUR	THREE	186693 186259 186260	186696	HIGH SPEED PICK UP
(F)	SIX	ONE	198882	196196	STANDARD
(G)	SIX	TWO	198885	196197	STANDARD
(H)	TWELVE	ONE	198883	196186	STANDARD
(J)	TWELVE	TWO	198886	196187	STANDARD
(K)					
(L)	FOUR	TWO	228881	104753	HIGH SPEED PICK UP
(M)	SIX	ONE	107559	107558	HIGH SPEED PICK UP
(N)	SIX	TWO	107566	107560	HIGH SPEED PICK UP
(P)	TWELVE	ONE	107557	107556	HIGH SPEED PICK UP
(Q)	TWELVE	TWO	108386	108388	HIGH SPEED PICK UP

FIG 104 12.7

DUO RELAY CHART

RELAY NO.	COILS			CONTACT POINTS								NAME	TYPE
	PU	PL	H	A	AU	AC	AL	B	BU	BC	BL		
441	2A				2A	2A	2A		2A	2A	2A	IDLING CONTROL	
442	4A		4A		3A		3A		2A			DRIVE CLUTCH RELAY	
443	3B			3B				17A				FUSE BLOWN	
444	5A								15A	15A	15A	PRINT THYRATRON PLATE CONTROL	
445	17A			17B				3B				POWER INTERLOCK	
446	5A		5A		5A		16A		5B		5A	TYPE WHEEL CONTACT ISOLATION CONTROL	
447	5A		5A		5A		16A		5B		5A	PRINTING ISOLATION CONTROL	
448	16B			10A								SENSE # 7	
449	16B			10A								SENSE # 8	
450	16B			10A								SENSE # 9	
451	16B			10A								SENSE # 10	D
452	7A		7A		7A				7A		8A	NON PRINT	S
453	7A				4A		11A		11A			NON PRINT	D
454	7A		7A		7A			7A				COMMON SPACE CONTROL	D
455	6B		6B		6B			7A				CONTROL AFTER SPACE OR SKIP	D
456	6B		6B		6B		7A					SPACE SUPPRESSION	D
457	6B		6B	6B				6B				EXTRA SPARE AFTER PRINTING	S
458	6A				6A				6B		8A	ALL SKIPS	S
459	6A				16A		8B		8B		10A	ALL SKIPS	D
460	6B		6B		6B		6B		7A		8B	FIRST LINE SUPPRESSION	T
461	8A	8A	8B		8B		8B		8A			CARRIAGE START	D
462	8A		8B		8B		8A		7B		6B	CARRIAGE RESTORE	D
463	8B		8A		8A		8A					SPACE INTERLOCK	S
464	8A			8A				8B				SKIP END CONTROL	D
465	8B		6A		6A		6B				8A	OVERFLOW	S
													S
467	8B			8B								STOP # 2	S
468	8B			8B								SKIP END	S
469	8B			6A								SKIP END	S
470	16A			10A								SENSE # 1	S
471	16A			10A								SENSE # 2	S
472	16B			10A								SENSE # 3	S
473	16B			10A								SENSE # 4	S
474	16B			10A								SENSE # 5	S
475	16B			10A								SENSE # 6	

WIRE CONTACT RELAY CHART

RELAY NO.	COILS			CONTACT POINTS												NAME	SIZE	TYPE
	PU1	PU2	H	1	2	3	4	5	6	7	8	9	10	11	12			
253	5B			NS	NS	NS	NS	NS	NS	NS	NS	NS	NS	NS	NS	TYPE WHEEL CONTACT ISOLATION RELAY	12	H
256	5B			NS	NS	NS	NS	NS	NS	NS	NS	NS	NS	NS	NS	TYPE WHEEL CONTACT ISOLATION RELAY	12	H
259	5B			NS	NS	NS	NS	NS	NS	NS	NS	NS	NS	NS	NS	TYPE WHEEL CONTACT ISOLATION RELAY	12	H
262	5B			NS	NS	NS	NS	NS	NS	NS	NS	NS	NS	NS	12A	TYPE WHEEL CONTACT ISOLATION RELAY	12	H
266 THRU 275	NOT USED																	
276	9B		9A	9A	NS	NS	NS	NS	NS							CO-SELECTOR # 19	6	N
277	9B		9A	9A	NS	NS	NS	NS	NS							CO-SELECTOR # 20	6	N
279 THRU 330	NOT USED																	
331	6A		6A	6A	7B	3A	6B									#1 TAPE CHANNEL CONTROL	4	L
332	6A		6A	6A	7B	3A	6B									#2 TAPE CHANNEL CONTROL	4	L
333	NS		NS	NS	7B	NS	NS									#3 TAPE CHANNEL CONTROL	4	L
334	NS		NS	NS	7B	NS	NS									#4 TAPE CHANNEL CONTROL	4	L
335	NS		NS	NS	7B	NS	NS									#5 TAPE CHANNEL CONTROL	4	L
336	NS		NS	NS	7B	NS	NS									#6 TAPE CHANNEL CONTROL	4	L
337	NS		NS	NS	7B	NS	NS									#7 TAPE CHANNEL CONTROL	4	L
338	NS		NS	NS	7B	NS	NS									#8 TAPE CHANNEL CONTROL	4	L
339	6A		6A	6A	7B	3A	6B									#9 TAPE CHANNEL CONTROL	4	L
340	6A		6A	6A	7B	3A	6B									#10 TAPE CHANNEL CONTROL	4	L
341	8B			6A	6A	NS	NS	NS	NS	NS	NS	6A	6A			SKIP INTERLOCK	12	J
344	8B			3B	8B		7B									CARRIAGE STOP # 3	4	A
345	8B			8B	7B	8B										DOUBLE SPACE # 1	4	L
346	8B		8B	8B	7B	8B	8B									DOUBLE SPACE # 2	4	B
348	6B		6B	6B	6A	6A	6B									SKIP END INTERLOCK	6	G
349	7A	7A	7A	7A	3A											SHORT SKIP #1	4	E
350	7A	7A	7A	7A	3A											SHORT SKIP #2	4	E
351	18A		18A			17A										55 VOLT INTERLOCK	4	B
352 THRU 385	NOT USED																	
386	4B		4B	3B	3A	5A	3B									CALCULATOR INTERLOCK RELAY	4	B
387	15B			3B	3A		5A									PREPARE TO WRITE RELAY	4	A
388	4A		4A	3A	13B	3A	5A									AUTO START	4	L
389	4B			3B	3B											FORM STOP	4	A
390	15B				5A											PREPARE TO READ	4	A
391	15B			7B	3B											CONTROL PANEL INTERLOCK	4	A
392 THRU 437	NOT USED																	
438	5B			15B	5B											READ, TRIGGER RESET CONTROL	4	A
439	5B			15B	5B											WRITE, TRIGGER RESET CONTROL	4	A
440	15B			5A	5A											DISCONNECT CONTROL	4	A

WIRE CONTACT RELAY CHART

RELAY NO.	COILS PU1	COILS PU2	COILS H	CONTACT POINTS 1	2	3	4	5	6	7	8	9	10	11	12	NAME	SIZE	TYPE
1	10A		10A	10A	10A											PILOT SELECTOR CONTROL #1	4	L
2	10A		10B	10B	10B	9B	10B									PILOT SELECTOR #1	4	L
3	10B		10B	10B	10B											PILOT SELECTOR CONTROL #2	4	L
4	10B		10B	10B	10B	9B	10B									PILOT SELECTOR #2		
5 THRU 14	NS															PILOT SELECTORS		
15	4A			11A	11A	NS	NS	NS	NS	NS	NS	NS	NS	NS	NS	"N" POSITIONS 1 THRU 12	12	P
18	4A			NS	NS	NS	NS	NS	NS	NS	NS	NS	NS	NS	NS	"N" POSITIONS 13 THRU 24	12	P
21	4A			NS	NS	NS	NS	NS	NS	NS	NS	NS	NS	NS	NS	"N" POSITIONS 25 THRU 36	12	P
24	4A			NS	NS	NS	NS	NS	NS	NS	NS	NS	NS	NS	NS	"N" POSITIONS 37 THRU 48	12	P
27	4A			NS	NS	NS	NS	NS	NS	NS	NS	NS	NS	NS	11A	"N" POSITIONS 49 THRU 60	12	P
30	4A			12A	NS	NS	NS	NS	NS	NS	NS	NS	NS	NS	NS	"N" POSITIONS 61 THRU 72	12	P
33	4A			NS	NS	NS	NS	NS	NS	NS	NS	NS	NS	NS	NS	"N" POSITIONS 73 THRU 84	12	P
36	4A			NS	NS	NS	NS	NS	NS	NS	NS	NS	NS	NS	NS	"N" POSITIONS 85 THRU 96	12	P
39	4A			NS	NS	NS	NS	NS	NS	NS	NS	NS	NS	NS	NS	"N" POSITIONS 97 THRU 108	12	P
42	4A			NS	NS	NS	NS	NS	NS	NS	NS	NS	NS	NS	12A	"N" POSITIONS 109 THRU 120	12	P
46	4B			13A	13A	13A	13A	14A	14A	14A	14A	14A	13A	13A	13A	CHAR EMMITTER OXRC RELAY POSITIONS	12	P
49	4B			13A	14A	14A	14A	14A	14A	13B	13B	13B	13B	14B	14B	CHAR EMMITTER OXRC POSITIONS	12	P
52	4B			14B	14B	14B										CHAR EMMITTER OXRC POSITIONS	4	L
53	4A			13B	13A	13A	13A	13A	13A	13A	13B					CHAR EMMITTER "EIGHT" POSITIONS	12	P
56 THRU 61	NS															PILOT SELECTORS		
62 THRU 69	NOT USED																	
70	4A			11B	11B	NS	NS	NS	NS	NS	NS	NS	NS	NS	NS	"OXRC" POSITIONS 1 THRU 12	12	P
73	4B			NS	NS	NS	NS	NS	NS	NS	NS	NS	NS	NS	NS	"OXRC" POSITIONS 13 THRU 24	12	P
76	4B			NS	NS	NS	NS	NS	NS	NS	NS	NS	NS	NS	NS	"OXRC" POSITIONS 25 THRU 36	12	P
79	4B			NS	NS	NS	NS	NS	NS	NS	NS	NS	NS	NS	NS	"OXRC" POSITIONS 37 THRU 48	12	P
82	4B			NS	NS	NS	NS	NS	NS	NS	NS	NS	NS	NS	11B	"OXRC" POSITIONS 49 THRU 60	12	P
85	4B			12B	NS	NS	NS	NS	NS	NS	NS	NS	NS	NS	NS	"OXRC" POSITIONS 61 THRU 72	12	P
88	4B			NS	NS	NS	NS	NS	NS	NS	NS	NS	NS	NS	NS	"OXRC" POSITIONS 73 THRU 84	12	P
91	4B			NS	NS	NS	NS	NS	NS	NS	NS	NS	NS	NS	NS	"OXRC" POSITIONS 85 THRU 96	12	P
94	4B			NS	NS	NS	NS	NS	NS	NS	NS	NS	NS	NS	NS	"OXRC" POSITIONS 97 THRU 108	12	P
97	4B			NS	NS	NS	NS	NS	NS	NS	NS	NS	NS	NS	12B	"OXRC" POSITIONS 109 THRU 120	12	P
100 THRU 124	NOT USED																	
125	4A			11B	11B	NS	NS	NS	NS	NS	NS	NS	NS	NS	NS	"OXRN" POSITIONS 1 THRU 12	12	P
128	4A			NS	NS	NS	NS	NS	NS	NS	NS	NS	NS	NS	NS	"OXRN" POSITIONS 13 THRU 24	12	P
131	4A			NS	NS	NS	NS	NS	NS	NS	NS	NS	NS	NS	NS	"OXRN" POSITIONS 25 THRU 36	12	P
134	4A			NS	NS	NS	NS	NS	NS	NS	NS	NS	NS	NS	NS	"OXRN" POSITIONS 37 THRU 48	12	P
137	4A			NS	NS	NS	NS	NS	NS	NS	NS	NS	NS	NS	11B	"OXRN" POSITIONS 49 THRU 60	12	P
140	4A			12B	NS	NS	NS	NS	NS	NS	NS	NS	NS	NS	NS	"OXRN" POSITIONS 61 THRU 72	12	P
143	4A			NS	NS	NS	NS	NS	NS	NS	NS	NS	NS	NS	NS	"OXRN" POSITIONS 73 THRU 84	12	P
146	4A			NS	NS	NS	NS	NS	NS	NS	NS	NS	NS	NS	NS	"OXRN" POSITIONS 85 THRU 96	12	P
149	4A			NS	NS	NS	NS	NS	NS	NS	NS	NS	NS	NS	NS	"OXRN" POSITIONS 97 THRU 108	12	P
152	4A			NS	NS	NS	NS	NS	NS	NS	NS	NS	NS	NS	12B	"OXRN" POSITIONS 109 THRU 120	12	P
155 THRU 165	NOT USED																	
166	9B		9A	9A	9B	9B	9B	9B	9B							CO-SELECTOR #1	6	
167	9B		9A	9A	NS	NS	NS	NS	NS							CO-SELECTOR #2	6	
169 THRU 178	NS																	
180	5A			21A	21A	21A	21A	21A	21A	21A	21A	21A	21A	21A	21A	PRINTING ISOLATION RELAYS	12	H
183	5A			21A	21A	21A	21A	21A	21A	21A	21A	21B	21B	21B	21B	PRINTING ISOLATION RELAYS	12	H
186	5A			21B	21B	21B	21B	21B	21B	21B	21B	21B	21B	21B	21B	PRINTING ISOLATION RELAYS	12	H
189	5A			22A	22A	22A	22A	22A	22A	22A	22A	22A	22A	22A	22A	PRINTING ISOLATION RELAYS	12	H
192	5A			22A	22A	22A	22A	22A	22A	22A	22A	22B	22B	22B	22B	PRINTING ISOLATION RELAYS	12	H
195	5A			22B	22B	22B	22B	22B	22B	22B	22B	22B	22B	22B	22B	PRINTING ISOLATION RELAYS	12	H
198 THRU 220	NOT USED																	
221 THRU 233	NS																	
235	5A			11A	11A	NS	NS	NS	NS	NS	NS	NS	NS	NS	NS	TYPE WHEEL CONTACT ISOLATION RELAY	12	H
238	5B			NS	NS	NS	NS	NS	NS	NS	NS	NS	NS	NS	NS	TYPE WHEEL CONTACT ISOLATION RELAY	12	H
241	5B			NS	NS	NS	NS	NS	NS	NS	NS	NS	NS	NS	NS	TYPE WHEEL CONTACT ISOLATION RELAY	12	H
244	5B			NS	NS	NS	NS	NS	NS	NS	NS	NS	NS	NS	NS	TYPE WHEEL CONTACT ISOLATION RELAY	12	H
247	5B			NS	NS	NS	NS	NS	NS	NS	NS	NS	NS	NS	12A	TYPE WHEEL CONTACT ISOLATION RELAY	12	H
250	5B			12A	NS	NS	NS	NS	NS	NS	NS	NS	NS	NS	NS	TYPE WHEEL CONTACT ISOLATION RELAY	12	H

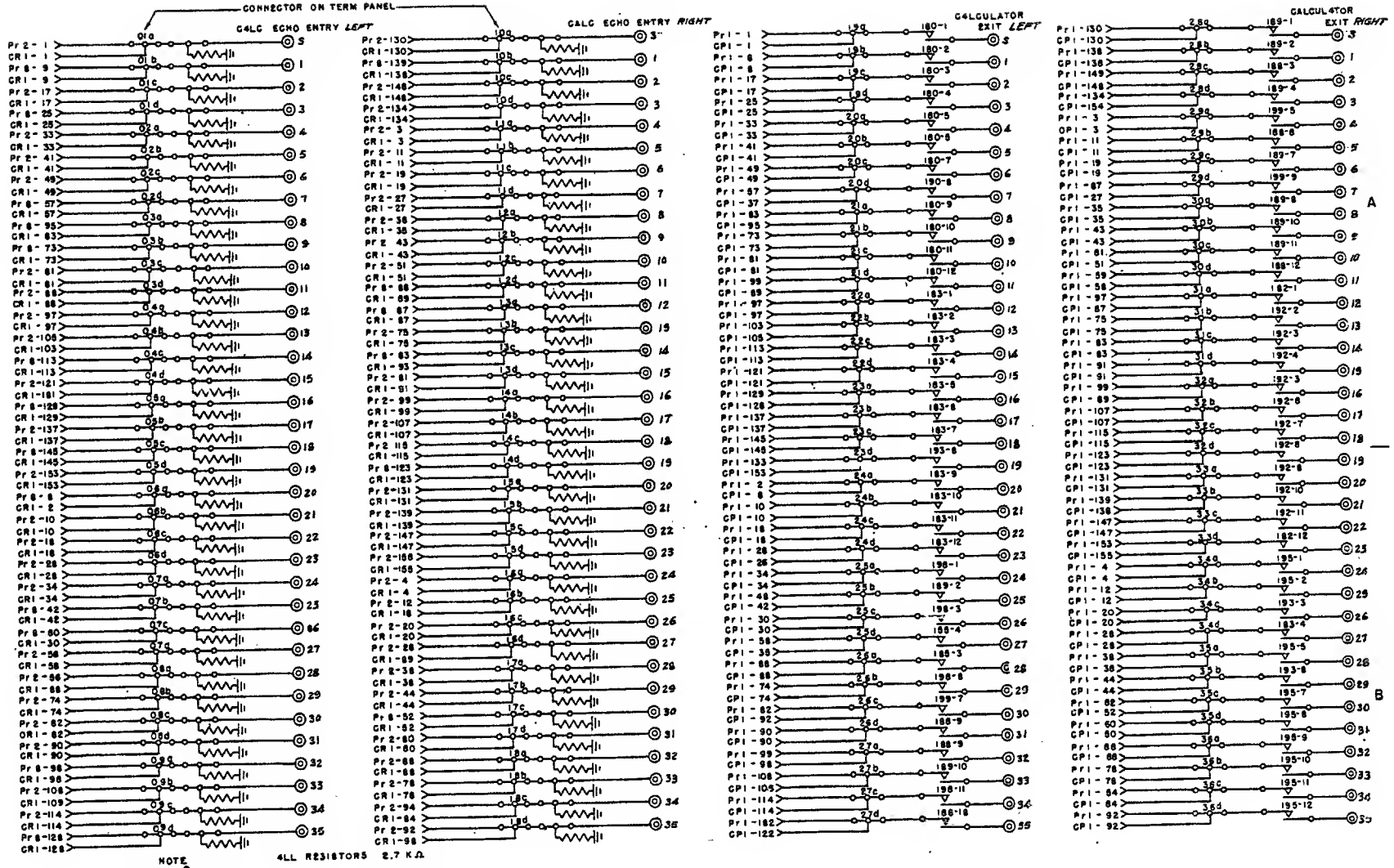

321448 EC 242267

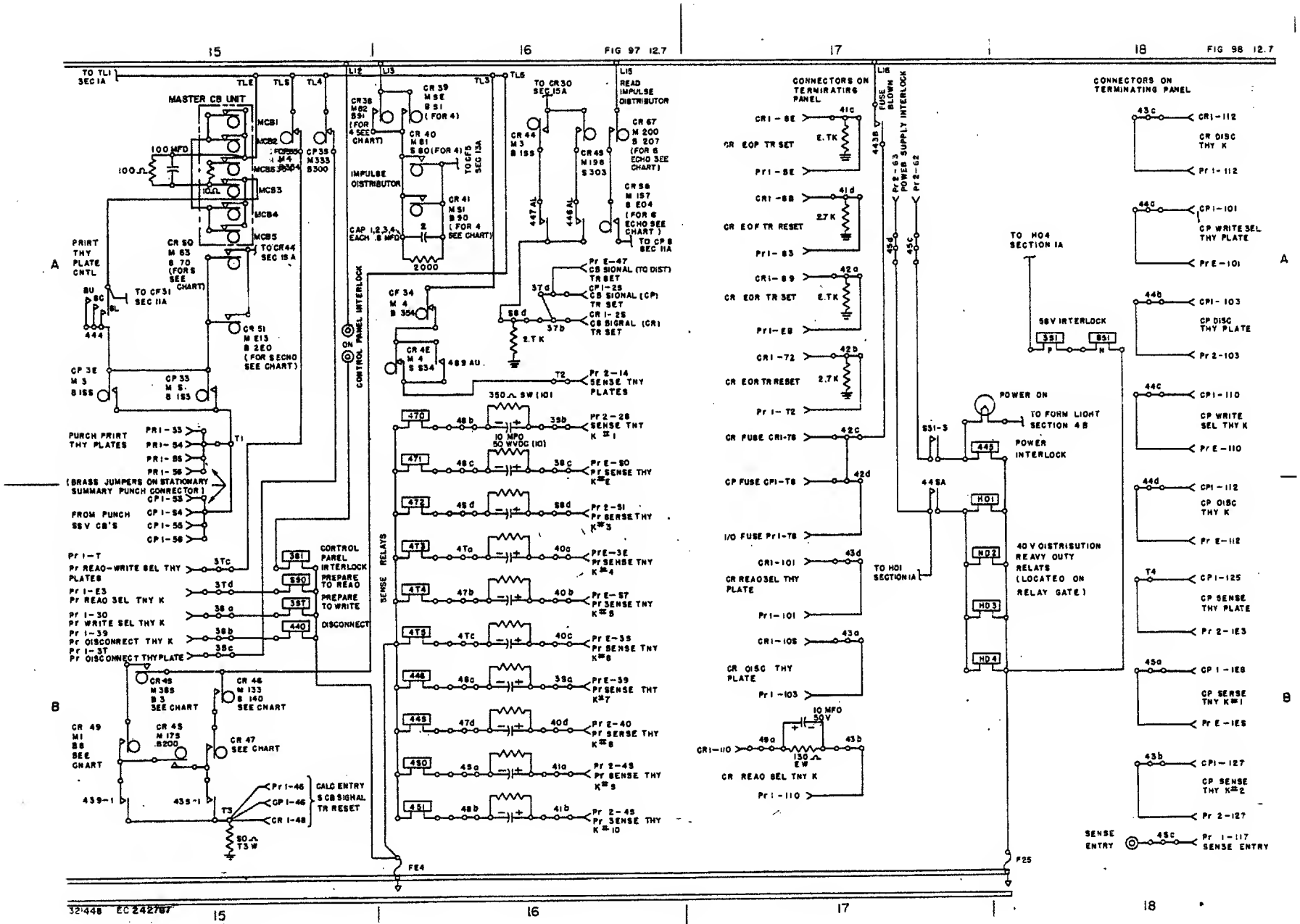
15
16
FIG 97 12.7
17
18
FIG 98 12.7
TO TL1 SEC 1A
MASTER CB UNIT
MCB1
MCB2
MCB3
MCB4
MCB5
100 MFD
100Ω
10Ω
CP 39 M 333 B 300
CR 36 M 82 B 31 (FOR 4 SEE CHART)
CR 39 M 5E B 51 (FOR 4)
CR 40 M 81 S 80 (FOR 4)
IMPULSE DISTRIBUTOR
CR 41 M 51 B 90 (FOR 4 SEE CHART)
CAP 1,2,3,4 EACH .5 MFD
2000
TO CP 15 SEC 15A
TO CR30 SEC 15A
CR 44 M 3 B 155
CR 45 M 196 B 303
READ IMPULSE DISTRIBUTOR
CR 67 M 200 B 207 (FOR 6 ECHO SEE CHART)
CR 68 M 157 B 204 (FOR 6 ECHO SEE CHART)
TO CP 8 SEC 11A
PRINT THY PLATE CNTL
CR 50 M 63 B 70 (FOR 5 SEE CHART)
TO CR44 SEC 15A
TO CP31 SEC 11A
CR 51 M 213 B 260 (FOR 5 ECHO SEE CHART)
CP 38 M 3 B 155
CP 33 M 5 B 153
PURCH PRINT THY PLATES
(BRASS JUMPERS ON STATIONARY SUMMARY PUNCH CONNECTOR)
FROM PUNCH 55V CB'S
CONTROL PANEL INTERLOCK
CONTROL PANEL INTERLOCK
PREPARE TO READ
PREPARE TO WRITE
DISCONNECT
CR 48 M 385 B 3 SEE CHART
CR 46 M 133 B 140 SEE CHART
CR 49 M 1 B 8 SEE CHART
CR 45 M 175 B 200
CR 47 SEE CHART
CALC ENTRY & CB SIGNAL TR RESET
SENSE RELAYS
Pr 2-28 SENSE THY K #1
Pr E-50 Pr SENSE THY K #2
Pr 2-51 Pr SENSE THY K #3
Pr E-3E Pr SENSE THY K #4
Pr E-57 Pr SENSE THY K #5
Pr E-35 Pr SENSE THY K #6
Pr E-39 Pr SENSE THY K #7
Pr E-40 Pr SENSE THY K #8
Pr 2-43 Pr SENSE THY K #9
Pr 2-45 Pr SENSE THY K #10
CONNECTORS ON TERMINATING PANEL
CR EOF TR SET
CR EOF TR RESET
CR EOR TR SET
CR EOR TR RESET
CR FUSE CR1-78
CP FUSE CP1-78
I/O FUSE Pr1-78
CR READ SEL THY PLATE
CR DISC THY PLATE
CR READ SEL THY K
FUSE BLOWN
POWER SUPPLY INTERLOCK
TO HO4 SECTION 1A
55V INTERLOCK
POWER ON
TO FORM LIGHT SECTION 4B
POWER INTERLOCK
TO HO1 SECTION 1A
40 V DISTRIBUTION HEAVY DUTY RELAYS (LOCATED ON RELAY GATE)
CONNECTORS ON TERMINATING PANEL
CR DISC THY K
CP WRITE SEL THY PLATE
CP DISC THY PLATE
CP WRITE SEL THY K
CP DISC THY K
CP SENSE THY PLATE
CP SENSE THY K #1
CP SENSE THY K #2
SENSE ENTRY
Pr 1-117 SENSE ENTRY
FE4
F25
32448 EC 242787

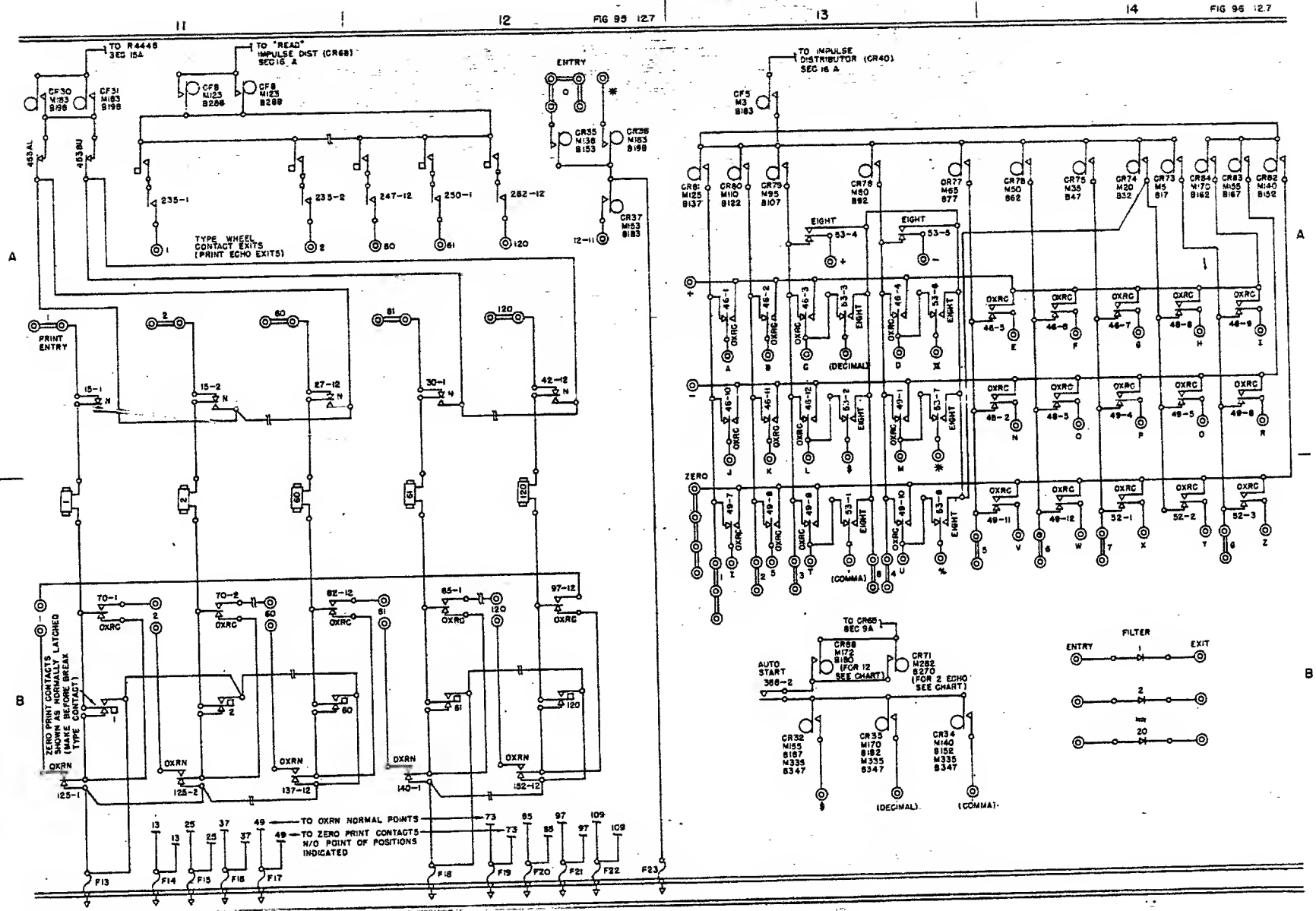
11
12
FIG 95 12.7
13
14
FIG 96 12.7
TO R4446 SEC 15A
TO "READ" IMPULSE DIST (CR68) SEC 16 A
TO IMPULSE DISTRIBUTOR (CR40) SEC 16 A
ENTRY
TYPE WHEEL CONTACT EXITS (PRINT ECHO EXITS)
PRINT ENTRY
ZERO PRINT CONTACTS SHOWN AS NORMALLY LATCHED (MAKE BEFORE BREAK TYPE CONTACT)
TO OXRN NORMAL POINTS
TO ZERO PRINT CONTACTS N/O POINT OF POSITIONS INDICATED
EIGHT
(DECIMAL)
(COMMA)
ZERO
TO CR65 SEC 9A
AUTO START
FILTER
ENTRY
EXIT

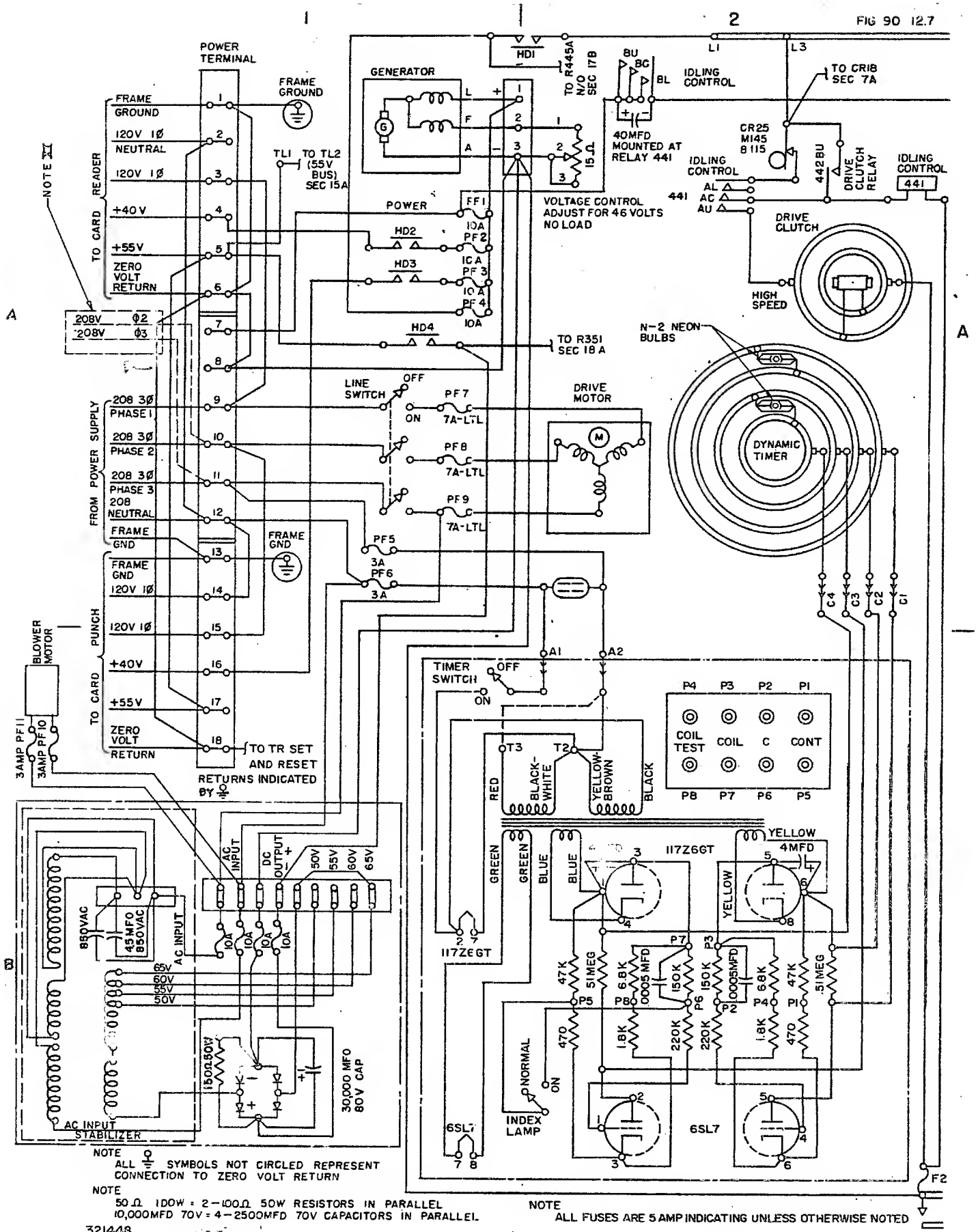
FIG 90 12.7
POWER TERMINAL
FRAME GROUND
120V 1Ø NEUTRAL
120V 1Ø
+40V
+55V
ZERO VOLT RETURN
TO CARD READER
NOTE II
208V Ø2
208V Ø3
208 3Ø PHASE 1
208 3Ø PHASE 2
208 3Ø PHASE 3
208 NEUTRAL
FROM POWER SUPPLY
FRAME GND
120V 1Ø
TO CARD PUNCH
BLOWER MOTOR
3AMP PF11
3AMP PF10
TO TR SET AND RESET
RETURNS INDICATED BY
GENERATOR
TL1 TO TL2 (55V BUS) SEC 15A
HD1
TO R445A N/O SEC 17B
BU BC BL
IDLING CONTROL
L1 L3
TO CR18 SEC 7A
40MFD MOUNTED AT RELAY 441
CR25 M145 B115
442BU
DRIVE CLUTCH RELAY
IDLING CONTROL 441
AL AC AU
VOLTAGE CONTROL ADJUST FOR 46 VOLTS NO LOAD
POWER
FF1 10A
HD2 PF2 10A
HD3 PF3 10A
PF4 10A
HD4
TO R351 SEC 18A
DRIVE CLUTCH
HIGH SPEED
N-2 NEON BULBS
LINE SWITCH OFF ON
PF7 7A-LTL
PF8 7A-LTL
PF9 7A-LTL
DRIVE MOTOR
DYNAMIC TIMER
PF5 3A
PF6 3A
C4 C3 C2 C1
A1 A2
TIMER SWITCH OFF ON
P4 P3 P2 P1
COIL TEST COIL C CONT
P8 P7 P6 P5
T3 T2
RED BLACK-WHITE YELLOW-BROWN BLACK
GREEN GREEN BLUE BLUE
117Z6GT
YELLOW 4MFD
117Z6GT
47K 51MEG 6.8K .0005MFD 150K 150K .0005MFD 6.8K 47K 51MEG
470 1.8K 220K 220K 1.8K 470
NORMAL ON
INDEX LAMP
6SL7
6SL7
AC INPUT
DC OUTPUT
50V 55V 60V 65V
10A
850VAC
45MFD 850VAC
150Ω 50W
30,000 MFD 80V CAP
AC INPUT STABILIZER
F2
NOTE
ALL ⏚ SYMBOLS NOT CIRCLED REPRESENT CONNECTION TO ZERO VOLT RETURN
NOTE
50Ω 10DW = 2-100Ω 50W RESISTORS IN PARALLEL
10,000MFD 70V = 4-2500MFD 70V CAPACITORS IN PARALLEL
NOTE
ALL FUSES ARE 5 AMP INDICATING UNLESS OTHERWISE NOTED
321448
EC 242767

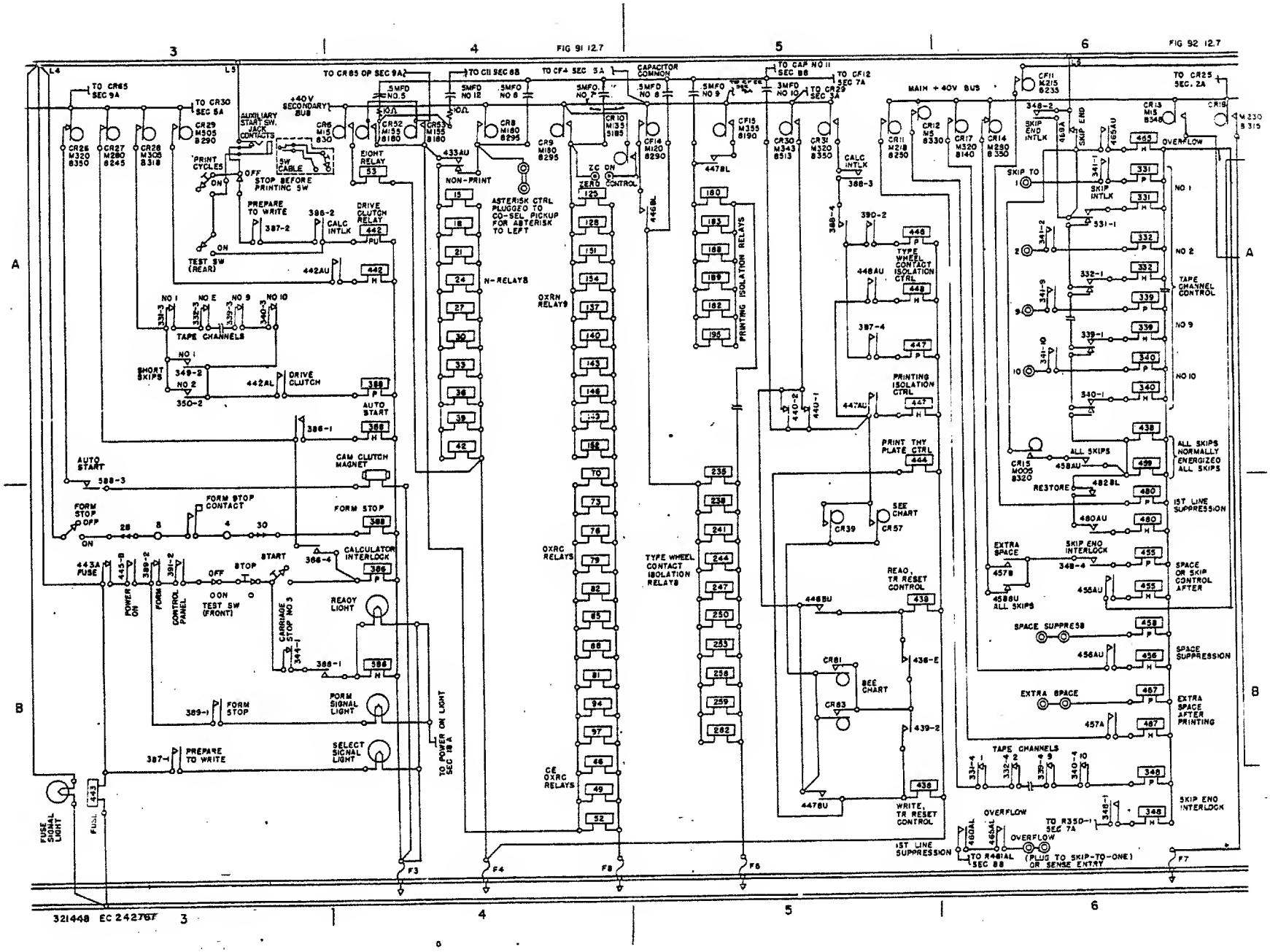
FIG 91 12.7
FIG 92 12.7
TO CR65 SEC 9A
TO CR30 SEC 5A
TO CR85 OP SEC 9A
TO C11 SEC 8B
TO CF4 SEC 5A
CAPACITOR COMMON
TO CAP NO 11 SEC 8B
TO CR12 SEC 7A
TO CR29 SEC 3A
TO CR25 SEC. 2A
MAIN +40V BUS
440V SECONDARY BUS
AUXILIARY START SW. JACK CONTACTS
PRINT CYCLES
STOP BEFORE PRINTING SW
TEST SW (REAR)
PREPARE TO WRITE
CALC INTLK
DRIVE CLUTCH RELAY
EIGHT RELAY
NON-PRINT
ASTERISK CTRL PLUGGED TO CO-SEL PICKUP FOR ASTERISK TO LEFT
N-RELAYS
OXRN RELAYS
OXRC RELAYS
CE OXRC RELAYS
ZERO CONTROL
TYPE WHEEL CONTACT ISOLATION RELAYS
PRINTING ISOLATION RELAYS
TAPE CHANNELS
SHORT SKIPS
DRIVE CLUTCH
AUTO START
CAM CLUTCH MAGNET
FORM STOP
FORM STOP CONTACT
CALCULATOR INTERLOCK
TEST SW (FRONT)
READY LIGHT
FORM SIGNAL LIGHT
SELECT SIGNAL LIGHT
TO POWER ON LIGHT SEC 10A
FUSE SIGNAL LIGHT
FUSE
SKIP END INTLK
SKIP END
OVERFLOW
SKIP TO
SKIP INTLK
NO 1
NO 2
TAPE CHANNEL CONTROL
NO 9
NO 10
ALL SKIPS NORMALLY ENERGIZED ALL SKIPS
RESTORE
1ST LINE SUPPRESSION
EXTRA SPACE
SKIP END INTERLOCK
SPACE OR SKIP CONTROL AFTER
SPACE SUPPRESS
SPACE SUPPRESSION
EXTRA SPACE AFTER PRINTING
TO R350-1 SEC 7A
TO R481A1 SEC 8B
(PLUG TO SKIP-TO-ONE) OR SENSE ENTRY
PRINTING ISOLATION CTRL
PRINT THY PLATE CTRL
SEE CHART
READ, TR RESET CONTROL
WRITE, TR RESET CONTROL
321448 EC 24276T

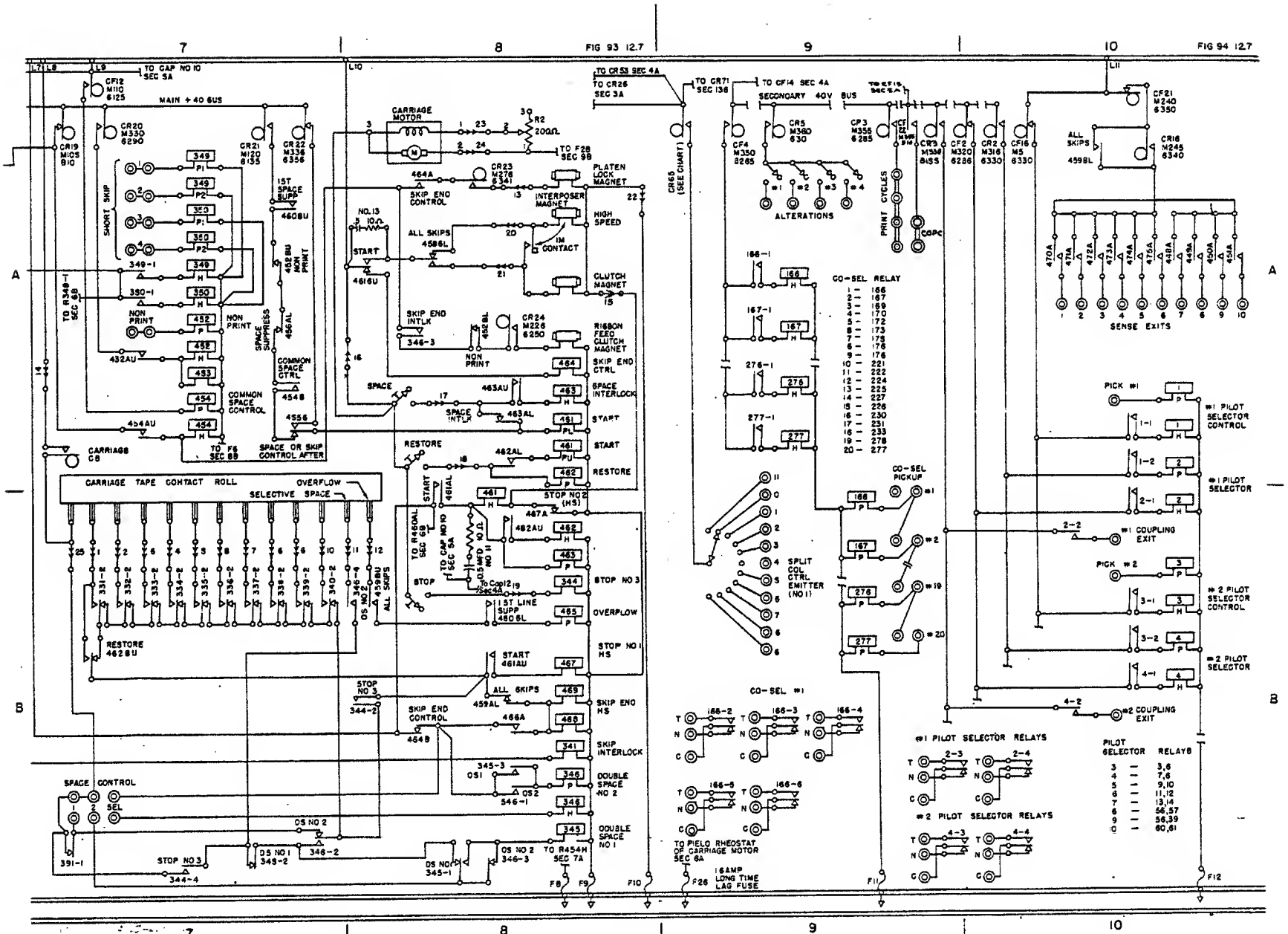

321448 EC 242787