IBM®

Customer Engineering
Manual of Instruction

604 Electronic Calculating Punch

©1958
International Business Machines Corporation
590 Madison Avenue, New York 22, N. Y.
Printed in U.S.A.
Form 227-7609-0

Contents

BASIC DESIGN AND OPERATIONS 7

PRINCIPLES OF ELECTRONIC OPERATION 25

Basic Concepts 25

Basic Electronic Circuits 26

Power Supply Notation (G & H) 26

The Inverter (IN) Unit (G & H) 26

Power (PW) Units (G & H) 38

Cathode Follower (CF) Units (H suffix only) 41

The Triode Switch (H suffix only) 44

The Pentagrid Switch (PS) Unit (G & H) 45

The Diode Switch (DS) Unit (H suffix only) 47

Germanium Crystal Diodes and Selenium Rectifiers (G & H) 49

Thyraton (TH) Units (G & H) 50

Trigger (TR) Units (G & H) 53

The Multivibrator (G & H) 63

Neon Indicators (G & H) 65

The Electronic Reset Circuit (G & H) 66

Wiring System, and Block Diagram Conventions (G & H) 69

Wiring Diagrams 69

System Diagrams 69

Block Diagrams 74

CALCULATING CIRCUITS 75

Electronic Storage (G & H) 75

Uses for the Modified Binary Storage Assemblies (G & H) 80

Card to Storage Read-In (G & H) 81

Burst System Read-In (H Suffix) 82

Pulse Per Point Read-In (G Suffix) 84

Electronic Timing (G & H) 87

Basic Ring Circuit (G & H) 87

Control Organization (G & H) 87

Pulse and Gate Notation (G & H) 90

Timing Circuits (G & H) 92

Multivibrator (G & H) 92

Pulse Generation and Calculate Start-Stop Controls 93

The Primary Timer (G & H) 96

Gate Generation and Pulse or Pulse Group Selection (G & H) 96

Program Advance Control (G & H) 97

Program Unit (G & H) 100

Special Primary Timer, Program Ring and Counter Reset (G & H) 104

Machine Testing Circuits (G & H) 105

Calculate Start Push Button 105

Program Lock Switch (H only) 106

Operation Control Dial Switch 106

Multivibrator Frequency Control (G & H) 108

The Punch Start and the Punch Stop Buttons (G & H) 108

Program Repeat and Non-Zero Stop Toggle Switch 109

Closing the Tube Gates 109

Program Test (G & H) 109

Electronic Transfer (G & H) 111

Electronic Read-Out (G & H) 111

The Add-Subtract Unit (G & H) 118

Complement Transfer (G & H) 121

Electronic Read-In (G & H) 122

Sign Transfer Channel Circuits (G & H) 124

Storage Assignment (G & H) 125

The Column Shift Unit (G & H) 128

Column Shift Control (G & H) 134

The Counter and Its Control (G & H) 136

Physical Locations (G & H) 142

Counter Read-In (G & H) 142

Carry (G & H) 144

Counter Read-Out (G & H) 145

Counter Resetting (G & H) 146

Counter Balance Sensing (G & H) 147

Counter Sign Channel Control on Read-Out 150

The True-Complement Circuit (G & H) 150

Storage to Storage Transfer 153

TC Control During Counter Read-In Operations (G & H) 153

Read-Out to Punch 154

Positive Counter Balance Read-Out to Punch 154

Inversion Read-Out Operation (G & H) 156

Sign Punch-Out Circuits (G & H) 162

SPECIALIZED CALCULATING CIRCUITS 163

Multiplication 163

Principle of Multiplication 163

Control Voltages for Multiplication 165

Sign Circuit Control of TC Trigger While Multiplying (G & H) 168

MQ Unit 169

MQ Sign Control 172

Secondary Timer Control (G & H) 172

Summary of Multiplication 177

Division ... 177
Division Operation (G & H) ... 178
Selection of Dividing Process ... 179
MQ Reset Controls (G & H) ... 179
Division Counter Balance Indicating Circuit (G & H) ... 180
Ten's Complement Division Arithmetic (G & H) ... 181
Operation Sequence, Positive Dividend (G & H) ... 182
Division Control Voltage, Positive Dividend (G & H) ... 184
Circuit Operation for Division Arithmetcal Steps (G & H) ... 187
Division with a Negative Dividend (G & H) ... 191
Cycle by Cycle with a Negative Dividend (G & H) ... 193
MQ Sign Control When Dividing (G & H) ... 193
Division by Zero (G & H) ... 194
Miscellaneous Electronic Circuits ... 194
Calculator Selectors ... 194
Suppress Without Balance Test (G & H) ... 195
Balance Test for Step Suppression (G & H) ... 195
Balance Test for Selector Pick-Up (G & H) ... 197
Electronic Digit Emitter (G & H) ... 197
Half Adjust (G & H) ... 198
Zero Check (G & H) ... 198

POWER SUPPLY ... 202
General Operation ... 202
DC Supplies ... 206
The Regulator Circuit ... 206
The Buck-Boost Transformer ... 207
The Saturable Reactor ... 209
The Thermistor ... 210
The Regulator Amplifier ... 212
The HI-LO Circuit ... 214
The Electronic HI-LO ... 215
Sensitrol HI-LO Detector ... 216
Other Items ... 216
Fusing ... 216
Metering ... 217
Thermal Overload ... 217
Rectifier Tubes ... 217
Installation and Adjustment Sequence ... 217

THE 521 PUNCH ... 218
The Conventional Oil Bath 521 ... 218
The Redesigned Drive 521 ... 219
Polarized Magnet Unit ... 222
521 Punch Circuits ... 222
Power Supply ... 223
Run Interlock ... 223
Running Circuits ... 223
Punching ... 224
Punch Suppression ... 224
Polarity Trap ... 224
Selectors ... 225
Checking Circuits ... 226
Double Punch and Blank Column Detection ... 226
Error Stop ... 227
Indicating Lights ... 227
Calculator Controls ... 227

APPENDIX ... 229

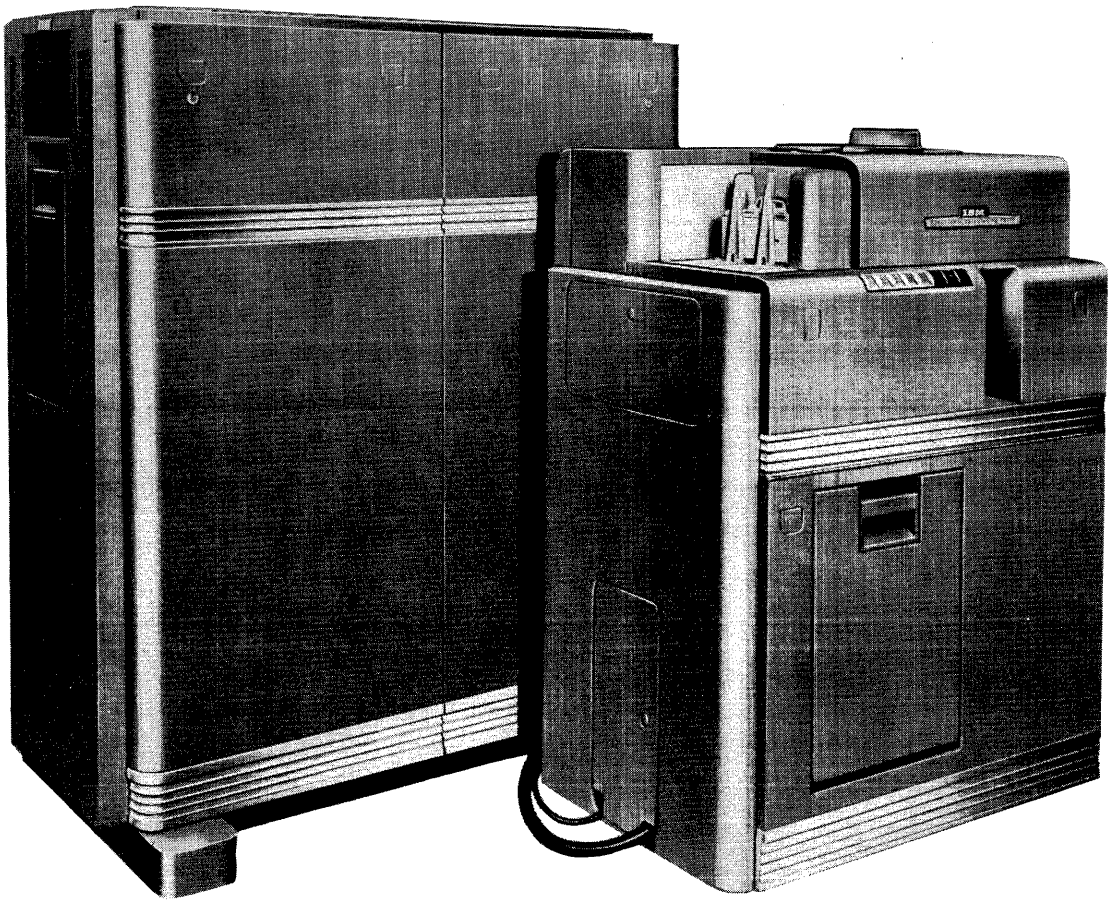

604 Electronic Calculating Punch

Basic Design and Operation

THE 604 is basically an extremely high speed adding machine. Engineering design makes it possible for the machine to subtract (by adding complements), to multiply (by over and over adding), and to divide (by over and over "subtraction"). These functions are accomplished with direct control panel wiring. The 604 calculator is limited by the speed of the 521 punch which runs at a constant speed of 100 cards a minute regardless of the complexity of calculations being done. Problems such as the following can easily be done at this speed:

$$\frac{45766 - 349 + (413 \times 72993) - (61347 \div 1797)}{86419} = ?$$

The machine will also accept and automatically keep track of any negative figures involved in a calculation.

The 604 Electronic Calculator consists of two units: the 604 Electronics Frame, and the 521 Punch which provides the input and output for the machine.

Due to the voltages involved care should be used while learning and servicing this machine. The 604 combination must be connected to a single phase 60 cycle power source supplying from 190 to 230 volts. The attachment cord has a regular electric range plug on the free end. A separate wall outlet is not needed for the 521 since it receives its AC power from a socket provided within the 604. In addition to the AC cord, a large multiconductor cable runs from the 604 and fits into a receptacle on the 521. It is through this cable that all desired data, read from the card, is fed to the 604 and all results from the calculator are fed back to the punch unit.

The 521 Punch is very similar to the punching half of the 514. Cards feed through the machine face down, twelve edge first, with the characteristic intermittent (geneva controlled) movement of IBM high speed punches. The separation between cards is one-quarter inch as in any fourteen cycle point machine. The one major difference between the 521 and the punch side of a 514 is the addition to the 521 of a full set of eighty reading brushes located exactly one machine cycle ahead of the punches. This permits the card to be read fully and then calculated before it moves under the punching station.

The 604 system uses two control panels. One fits into the 521 and, in general, permits selection of the card columns to be read; determines into which electronic area this data will be placed; and finally, determines which part of the answers will be punched into selected card columns. The second, and smaller, panel fits into the 604 and controls electronic operations during the calculation itself.

Any problem presented to the 604 must be broken down into a series of separate actions called program steps. Each operation, even one involving nothing more than moving a digit group from one area of the machine to another, takes one program step. These program steps occur successively, and it is through them that the calculation is completed. The control panel effectively stores the necessary instructions and determines what is to be done and in what order.

Performance of calculations with a minimum of program steps often calls for a high degree of board wiring ingenuity.

The 604 *Manual of Operation*, Form 22-5279, provides detailed data regarding control panels and machine operations. Figures 3 and 4 show the arrangement of the panel hubs and the wiring needed to read information from a card, add one group of figures to another, subtract a third group, and punch out the result.

The right half of the 521 control panel is used primarily for data wiring (what columns are read, where the data is placed, where the answers will be found, and where they will be punched). The left half is generally for control (what is done with the data as far as getting it into and from the calculator).

The Storage Units are either three or five positions wide as indicated by the panel hubs. The right-hand

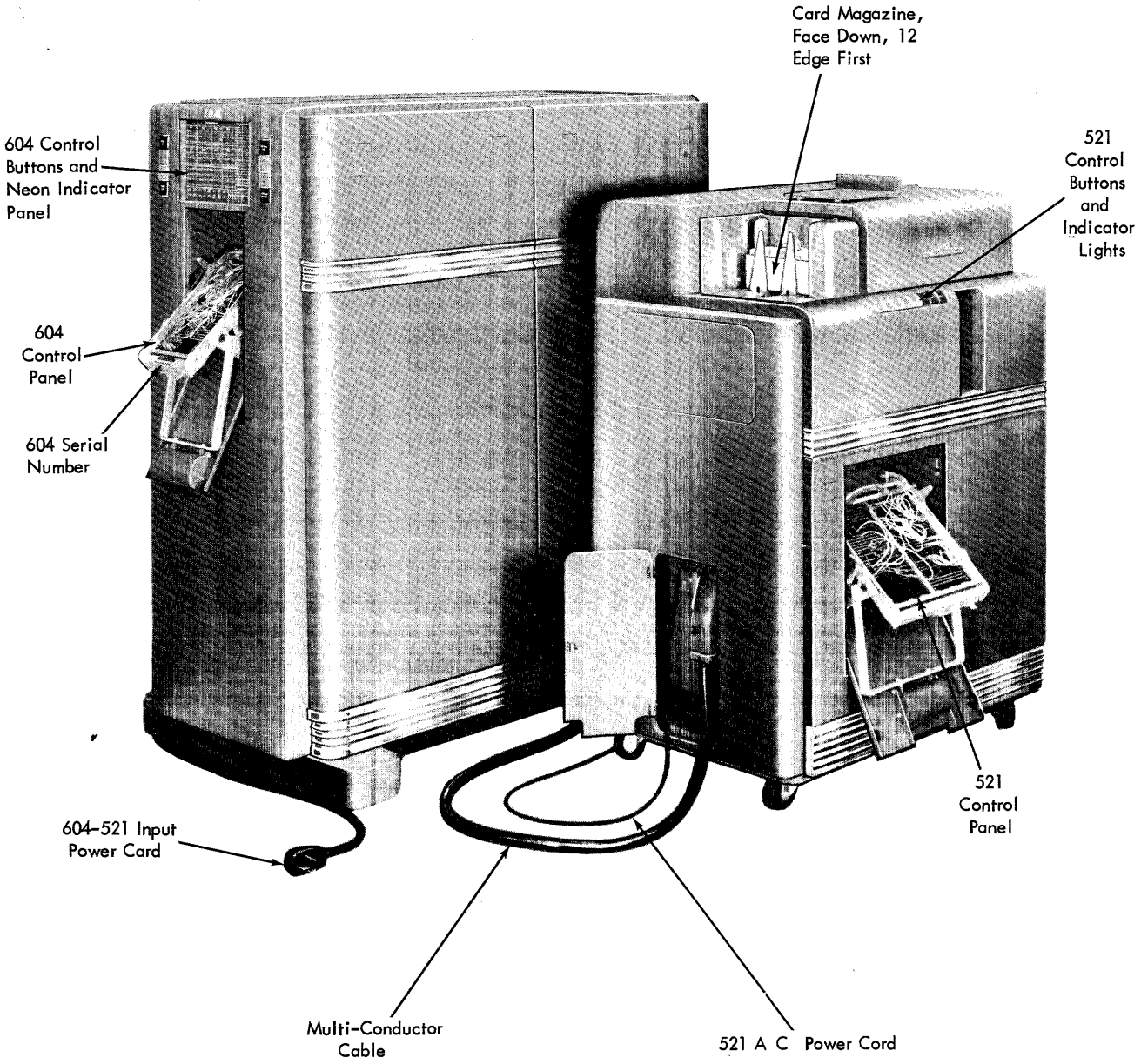

MACHINE	WEIGHT UNPACKED	LENGTH	WIDTH	HEIGHT	TOTAL 604-521 RUNNING CURRENT: *			POWER FACTOR	POWER USED
					190v	208v	230v		
521	670 lb	41"	25 1/2"	50"	—	—	—	—	—
604	1310 lb	52 1/2"	31"	60"	36 Amp	32 Amp	29.5 Amp	Near .8	5.5 Kw
604H	1250 lb	52 1/2"	31"	60"	32 Amp	29.6 Amp	27.2 Amp	Near .8	5.0 Kw

* Starting current for 521 adds 6 Amps. 604 starting current does not exceed running current.

Figure 1. The 604 Electronic Calculator with the 521 Punch

entry hub is the units position. The hub to the extreme right of each storage entry and exit hub group, separated from the group by the dotted line and with a minus sign above it, is a special sign control item. This will be discussed in detail in the circuits portion of the manual. For ordinary use, an x punch over the units position of a number read into a Storage Unit will cause that number to be accepted by the machine as negative. During punching, an x will be automatically punched over the units position of any negative figures read out. Special wiring and the use of the SIGN hubs permits this convention to be modified as desired.

Punch Selectors (right panel) are five positions wide. They transfer as soon as the PICK-UP hubs (left panel) are impulsed, and hold until the end of that punch cycle. Pilot selectors (points and pick-ups on left panel) have two controlled positions. x's or "12's" into the x PICK-UP hubs cause the points to transfer at the start of, and hold throughout, the *next* punch cycle. *Any* impulse into the DPU hub causes the same action. The IMMEDIATE PU hubs transfer the selector as soon as impulsed and cause it to hold throughout the remainder of *that* cycle.

On the 604 panel, the main source of control is the PROGRAM EXIT unit. Each of the program levels has four hubs associated with it; three individual EXIT hubs and one PROGRAM SUPPRESS hub to permit the program action to be killed. The three separate EXIT hubs help prevent back circuits and provide all the control impulses generally needed for any program step. Generally, all the instructions needed by the machine for any normal action are FROM what unit TO what unit and what SPECIAL (if anything) must be done.

The labeling on the 604 panel is relatively simple and generally descriptive of the action produced. The Calculator Selectors, to the right of the panel, each have five transfer points. The pick-up of these selectors is controlled by wiring on the 521 panel. The 604 control

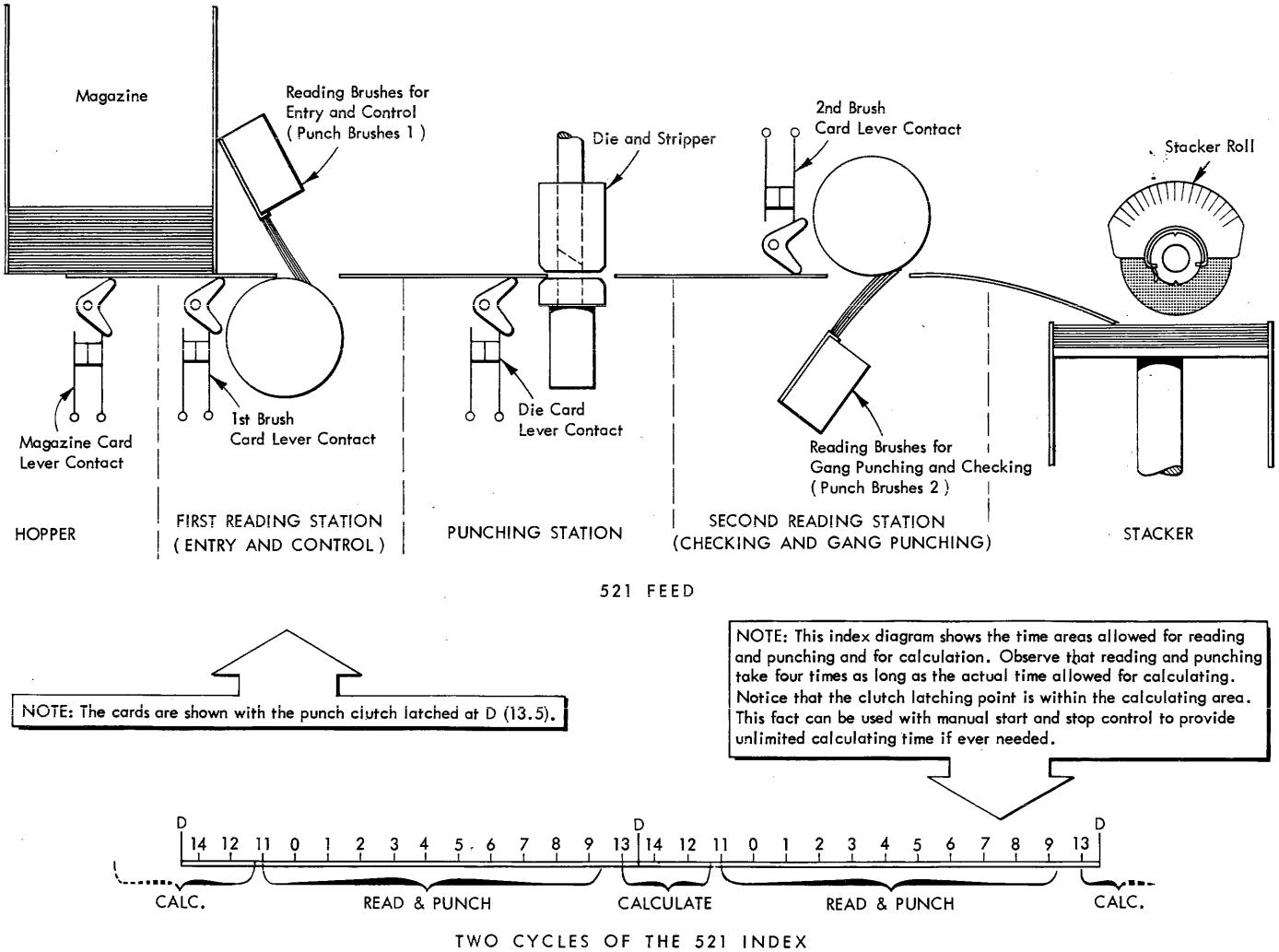

Figure 2. The 521 Punch Feed and Index

panel wiring can be run through these selectors, and in this way different cards passing through the 521 can call for and get different processing actions.

The hubs in the bottom fourth of the 604 panel permit certain special operations to be done and allow limited decisions to be made at calculating speed. These decisions can actually be used to alter what is done on following program steps for that calculation. Use and operation of these hubs will be fully covered in the circuits description. The READ UNITS INTO and READ UNITS OUT OF hubs are column shift controls that allow realignment of number groups within the 604. This is more fully explained in the text discussing Figure 5.

Figure 5 shows the general design layout of the 604-521 combination. Used in conjunction with the control panel diagrams given in Figures 3 and 4, a good understanding of the machine organization can be had. All communication between the two machines is through the multi-conductor cable which divides Figure 5 into two parts. All hubs located to the left of the cable are located on the 521 punch, while those to the right will be found on the 604 panel.

The 604 contains an electronic control unit, a Counter, four Factor Storage units, four General Storage units, a Multiplier-Quotient (MQ) unit, an Add-Subtract unit, a Column Shift unit, and the interconnecting channel circuits. All of the data-holding units (Storage, Counter, and MQ) have their electronic outputs commoned in parallel to an important group of wires called the Exit Channels. These common Exit Channel leads terminate

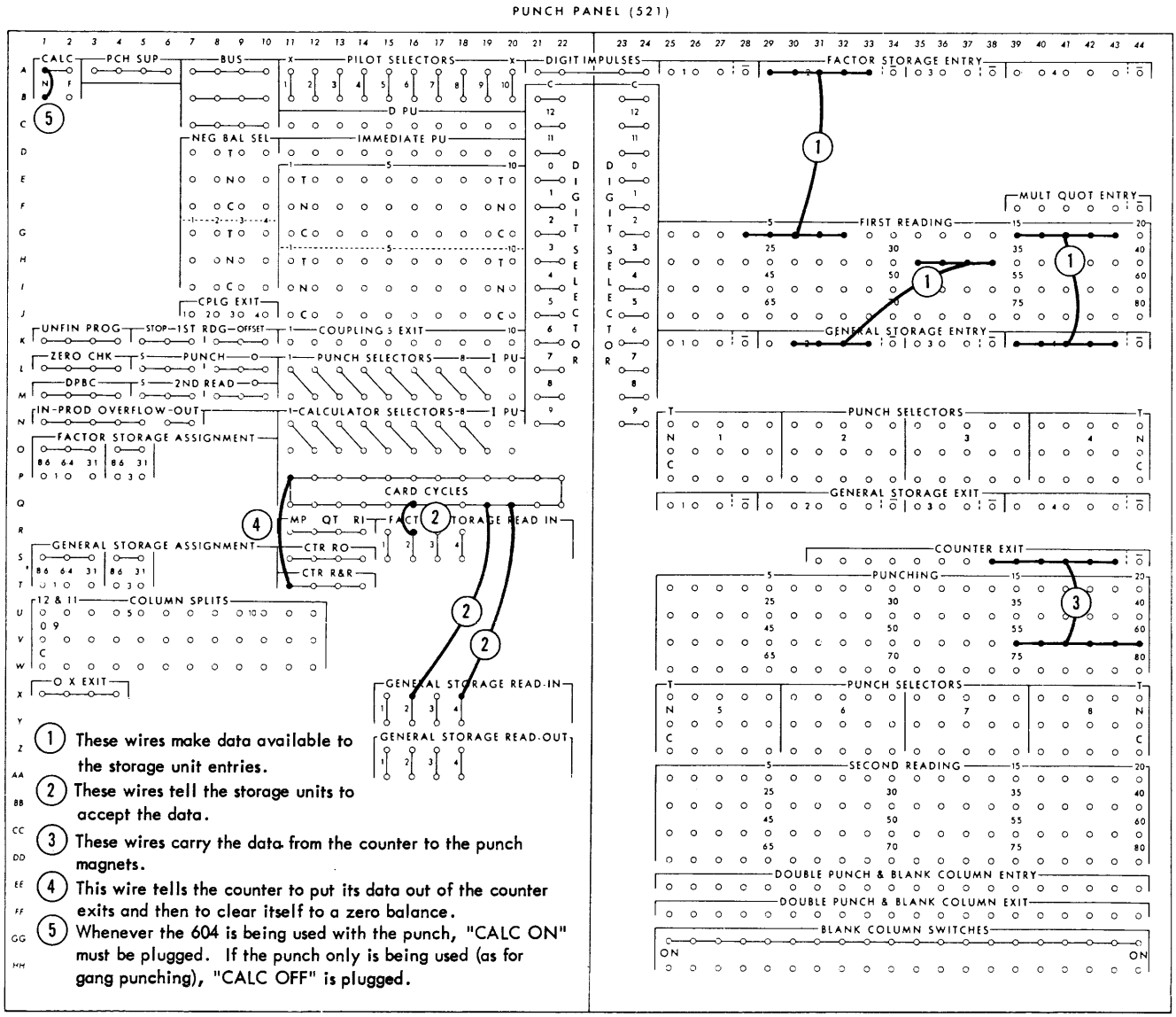

Figure 3. The 521 Control Panel with Wiring for Reading and Punching

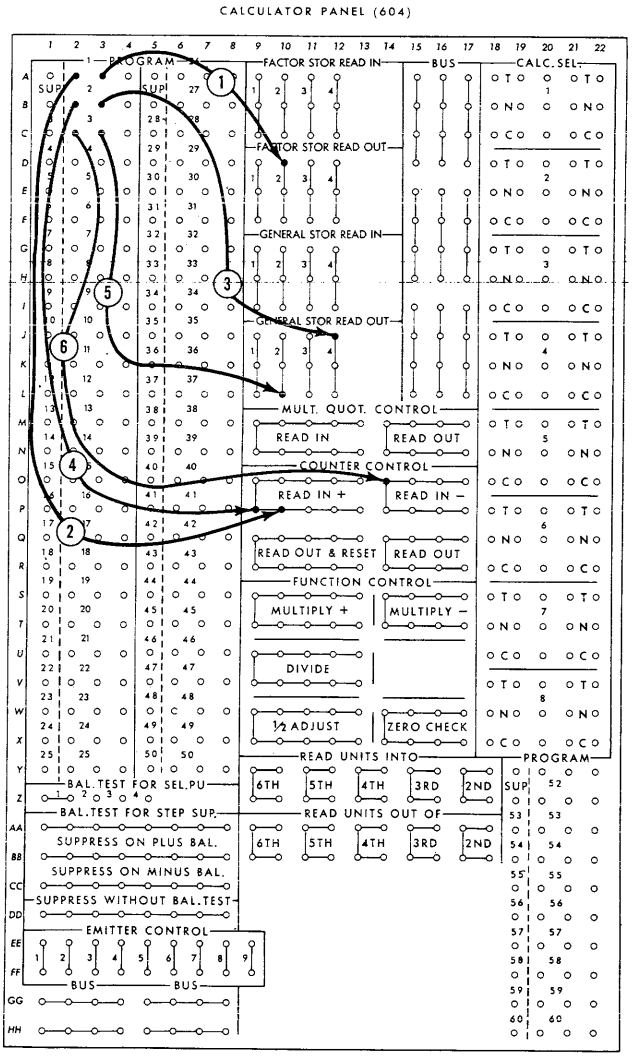

NOTE: The wiring shown in Figure 4 is for use with the 521 control panel shown in Figure 3. Wires 1 and 2 of this 604 panel run from Program Step One and cause the number group in Factor Storage Two to be read into the Counter. Wires three and four from the second program step cause the number group in General Storage Four to be read out and added to the figure already in the Counter. Wires 5 and 6 from Program Step Three cause the number group in General Storage Two to be read out and subtracted (Counter Read-In Minus) from the Counter total. The answer is now in the Counter and may be left there for punching out or transferred into a Storage Unit for safekeeping (if the Counter is needed for other operations for the calculation of the card).

Figure 4. The 604 Control Panel

at the Column Shift Add-Subtract unit, which passes the data through itself (modified if needed as to position or form) to the Entry Channels. These Entry Channels in turn feed to each of the data-holding units of the machine in parallel. Data can thus be moved around within the machine from any data holding unit to any other data holding unit. Within the 604, this is always done in exactly the same way: 1) from the sending unit exit; 2) to the common exit channels; 3) through the column shift; 4) through the Add-Subtract unit; 5) to the common entry channels; 6) to the receiving unit. Since the entry channels feed to *all* the information storage units simultaneously, a method must be provided to make sure that only the desired storage unit receives the data. An electronic switch unit within each storage unit (controlled by a wire from a PROGRAM EXIT to the desired READ IN hub on the 604 control panel) provides this control. At the sending end, only the unit told to Read Out will put data on the exit channels. A control panel wire from a PROGRAM STEP EXIT to a READ OUT hub of the desired unit controls this. Both the unit told to Read Out and the unit told to Read In must receive their control condition at the same time; that is, from the same program step. Each program step has three EXIT hubs which are active on the same cycle but which are not commoned (in order to eliminate possible back circuits). The program steps progress serially under control of the electronic pulse generator and timer, which in turn is permitted to run only at the time dictated by the 521 Punch.

Factor Storage Units 1 and 3 and General Storage units 1 and 3 are each capable of handling a three digit maximum number group both electronically and from

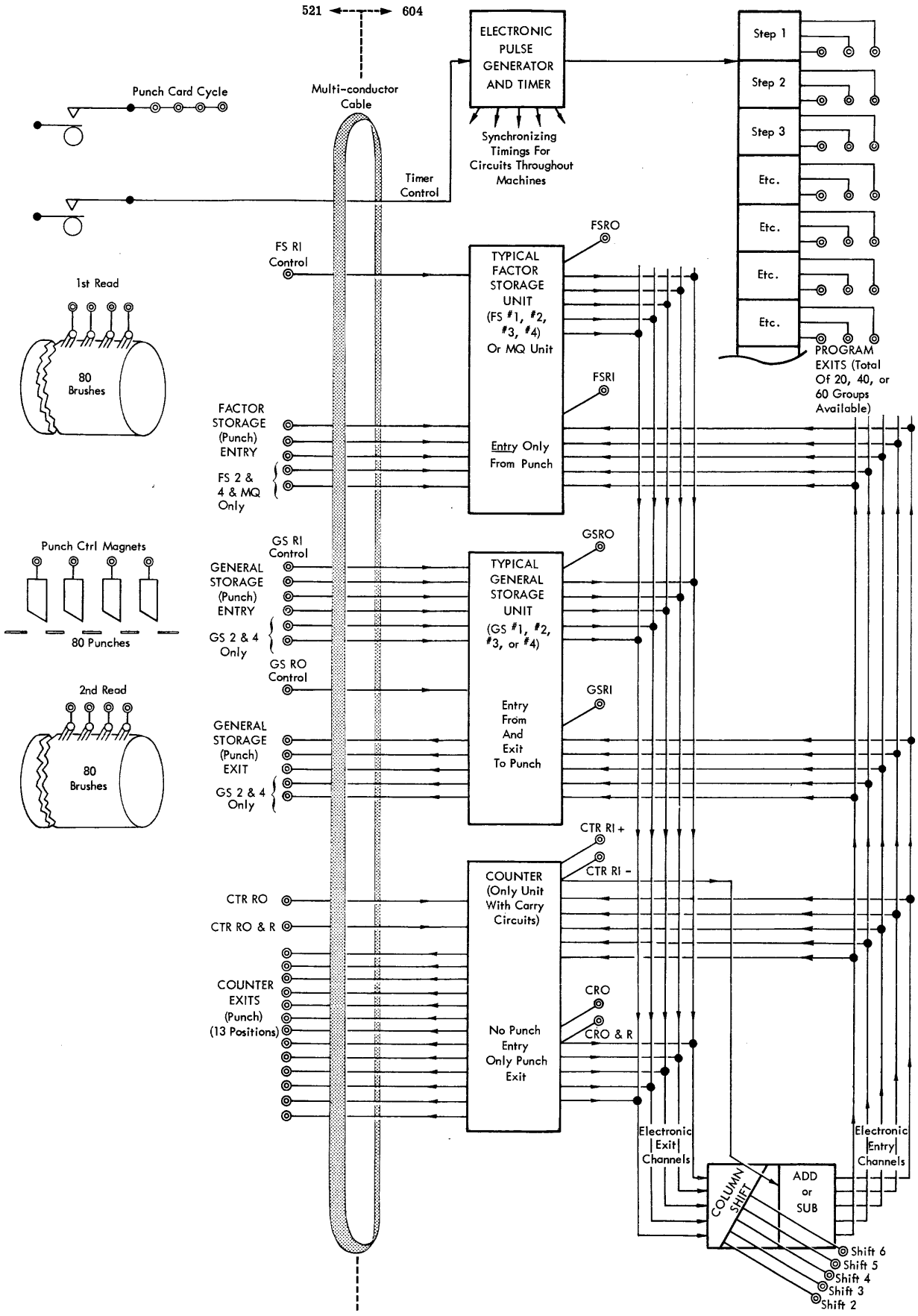

Figure 5. A Simplified Organization of the 604-521 Electronic Calculator

the punch. All the other Storage units, and the MQ unit, have a five digit capacity. The Counter is a thirteen digit unit.

For simplicity, only five exit and entry channels are shown in Figure 5. The machine itself uses eight channels as well as a special thirteen channel arrangement for the counter. The need and use for these channels will be fully covered later in the text.

The Factor Storage units, General Storage units, and the MQ unit are all designed to clear themselves (reset to zero) whenever they are told to Read In. Thus, just before the new data arrives at a Storage unit, any older information is erased from it. This, plus the fact that there are no carry circuits provided, prevents any arithmetic from being done in Storage units. The Counter, on the other hand, *has* carry circuits and does *not* reset unless told to do so on a Read *Out* operation, i.e., "Counter Read Out and Reset" (CRO & R). Another difference in the counter is the fact that it has two Read In controls: Read In Plus for adding a figure, and Read In Minus for subtracting a figure. The Add or Subtract unit near the Column Shift actually provides the difference between the two operations by converting to compliments the necessary numbers. All arithmetic functions of the 604 Calculator must make use of the Counter.

The Column Shift unit has as its function the changing of the alignment of data as it flows from the exit to the entry channels. The digit appearing on exit channel one can thus be made to appear on another entry channel line with all other digits of the number group similarly shifted. This greatly increases the flexibility of the machine and makes practical the over and over addition method of multiplication as well as the over and over subtraction method of division. Without the column shift, multiplying by 502 would require 502 addition cycles. With the column shift operating, the process is completed in seven (5 + 0 + 2) cycles of addition plus five cycles of control.

The 604 itself works at a constant electronic cycle rate of one transfer of a number group, or one addition or subtraction of a number group, every 480 microseconds. Multiplication and division, being accomplished by repeated additions and subtractions, take extra cycles. Despite this high speed, it is possible that a problem will require more time than that allowed by the punch as it runs at its constant 100 card per minute speed. Under these circumstances, the card will pass through the machine without being punched and the incompleted answers erased from the machine to prevent conflict with the card following. If desired, the 521 panel may be wired to stop the machine and turn on the "Unfinished Program" indicator light under these conditions. The few cards requiring more calculating time can easily be re-run through the 521 punch while alternately depressing the start and stop buttons. This will cause the punch clutch to latch every other cycle. Since the 604 calculates between cards and will continue to calculate with the punch clutch latched, this manual procedure will provide all the calculating time ever needed.

A few considerations dictate the total time normally available for calculation as indicated in Figure 2. First, the card must be fully read before calculations can start. Since time is needed for resetting certain circuits, this limits the calculate start to 13.0 at the earliest. Secondly, the stopping point for calculating is dictated by the time of the first hole to be punched that can be called for by the 604. This is an X hole used to indicate any negative answers. Since we must know our answers before this point, 12.7 becomes a practical calculate stop time. These timings are given to the 604 from 521 circuit breaker impulses sent through the multiconductor cable. The 521 holds the 604 in check until calculate start time, releases it for calculating, and clamps it off at calculate stop. During calculate time, the 521 does not in any way interfere with the 604. Generally, the 604 will complete its work well ahead of the calculate stop point and will have to wait for the 521 to retake control.

The 521 can be used for a gang punching operation even while doing a calculate job. Since there is no calculating involved in a gang punch operation, all holes, including twelves, can be punched.

The 521 portion of Figure 5 shows the first reading station, the punch magnets, the second reading station, the CARD CYCLES hubs, and a representative calculator controlling circuit breaker. The function of the 521 is to permit data to be read from the desired card columns and to permit the calculated answers to be punched whenever wanted in the card. A study of the diagram will show that not all the electronic units can accept data from the 521, nor can all of them be used to punch answers. General Storage Units can accept input data and can also be used for output punching (though they cannot do both on any one punch cycle). Factor Storage Units and the MQ Unit can only accept input data. The Counter, on the other hand, can only be used to supply output data to the punch.

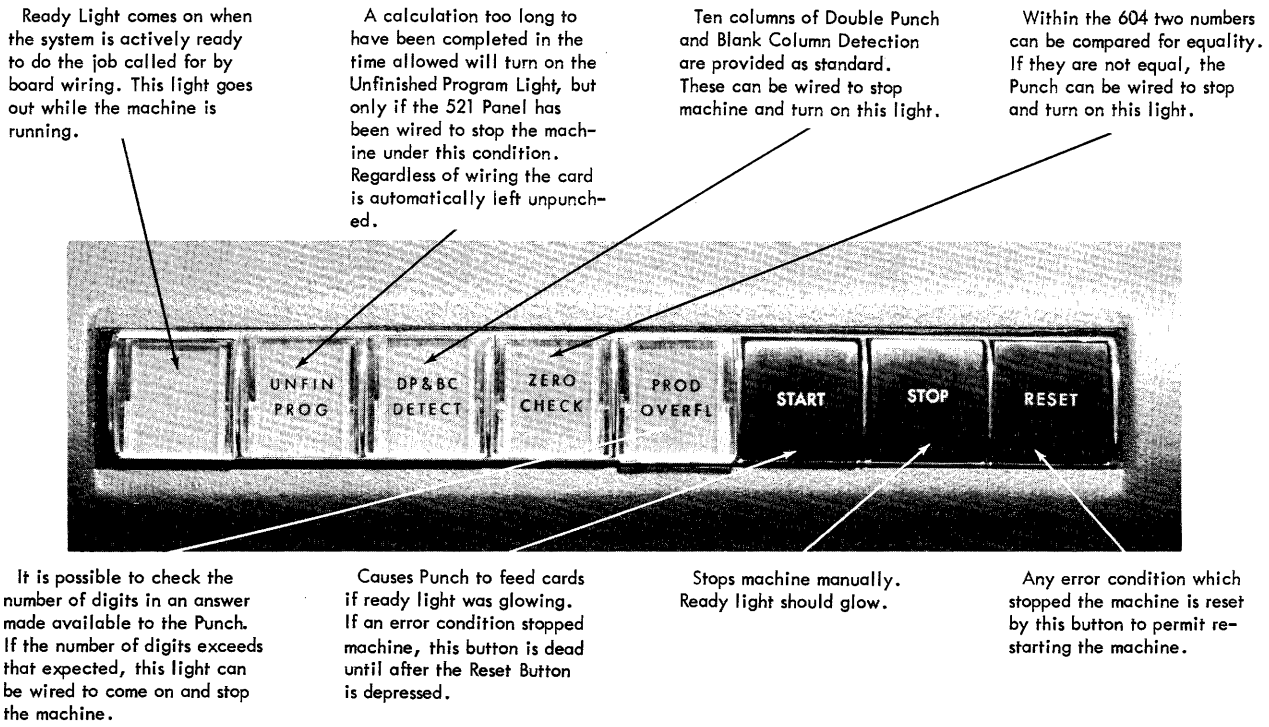

Figure 6. 521 Key Buttons and Indicator Lights

There are two general types of wires on the 521 panel; Data Wires and Control Wires. Both are needed to accomplish most functions. The Data Wires are those running from READING BRUSHES to ENTRY hubs, from EXITS to PUNCH MAGNETS, etc., and which have to do with the input and output of data. Control wires have as their function the telling of units to accept and read in the available data, or to punch it out, or to pick up a selector, etc.

Merely making data information available at the storage entry hubs is not enough to get this information into the calculator. The Storage unit must also be told to accept the available data. This is accomplished by running a control wire from a source such as CARD CYCLES to the desired storage READ IN CONTROL hub on the 521 panel. The same thing is true of punching from the Counter or a General Storage unit. Not only must the data wires be in the control panel, but a control wire telling the desired unit to Read Out must also have been wired from CARD CYCLES.

Information is normally made available to the storage ENTRY hubs from the first reading brushes. In this way, the answer can be punched in the same card as it moves under the punching station. The punch magnets receive their data from the General Storage or Counter EXIT hubs. The second reading brushes can be used to read the problem a second time if desired. This will allow it to be re-calculated and compared for accuracy against the answer just punched and itself read from second reading. The second reading brushes can also be used to read the initial data, but the answer will have to be punched in a card at least two cards further back. Gang punching, too, is done through use of the Second Reading brushes.

Both data wiring and control wiring are needed for operation of most machines. Within the 604, however, the data wiring is internally provided through the common exit and entry channels. Since this variable factor has been removed from consideration on 604 panels, it has been found very convenient to describe 604 panel wiring by means of a *planning chart* rather than an actual wire for wire diagram such as is needed to properly indicate card columns, etc., for the 521. Figure 7 shows a planning chart filled out for the problem shown in wired form in Figures 3 and 4.

With simple problems such as this there is little to choose between the two representations; but with more complex problems, the planning chart becomes the better means of describing the operations being performed. It is much easier to follow; and in addition, the numbers involved in a typical problem can be entered in the spaces provided and traced through the

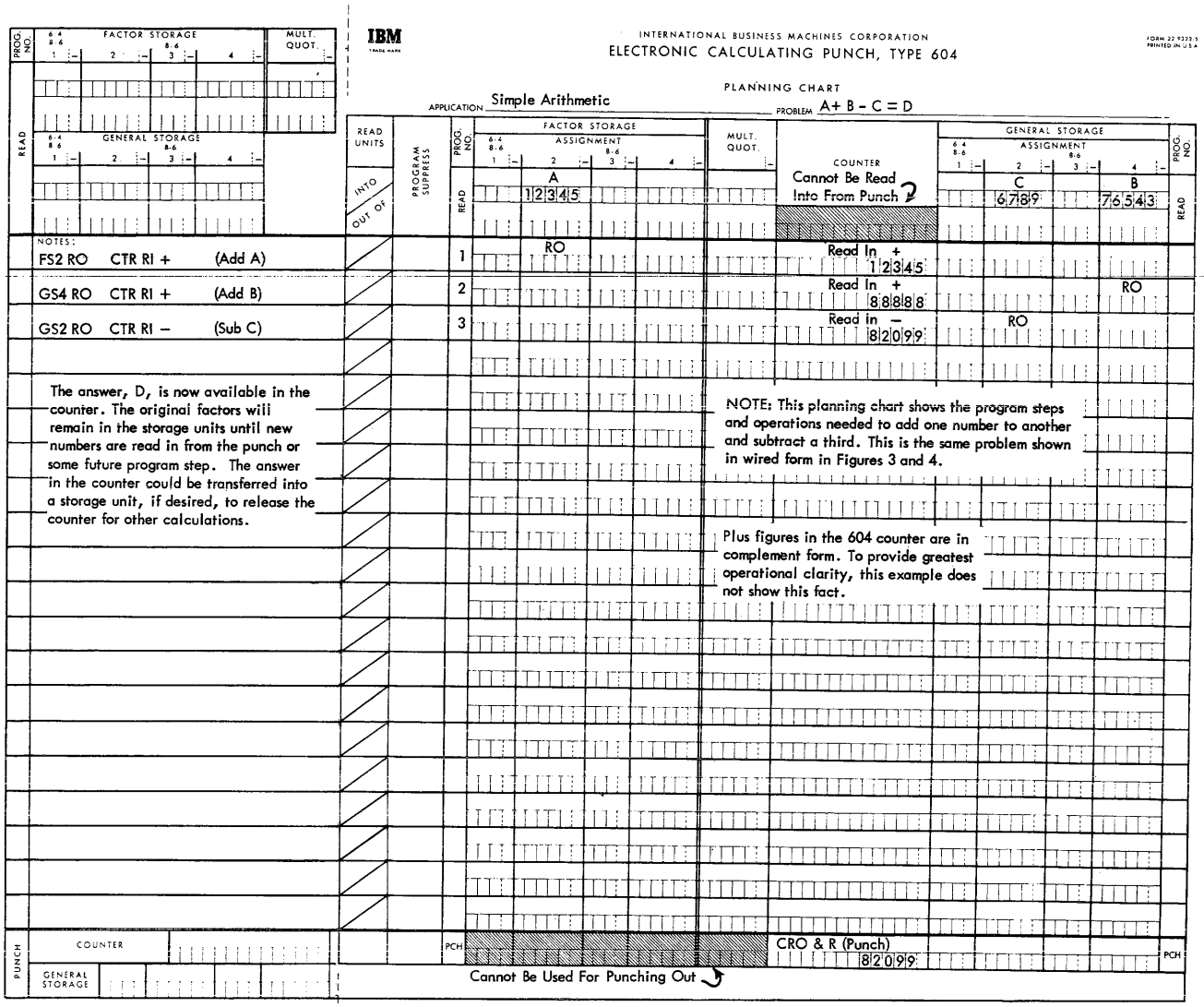

Figure 7. A 604 Planning Chart

program steps. By using these exact figures punched in a card read by the 521, the machine operation can be tested on a step by step basis.

A neon indicator panel and a group of control buttons and indicator lights are located on the 604 directly above the control panel cover. The neon panel allows the factors in any portion of the machine to be determined as well as what program step is occurring and what the machine has been instructed to do on that step. The 604 uses a binary coded numbering system so that the digit in any storage position is the sum of the values of the lighted neon bulbs in the column as indicated by Figure 9.

The Counter neons are read similarly with one additional fact to be considered. Positive figures in the Counter are stored there in nines complement form while negative results are in true form. Thus, if the Counter minus light is on, the figure may be read off directly; otherwise, the lighted neons will represent the complement of the actual figure expected. Figures in Storage units are always in true form regardless of sign.

With the calculator working at normal speeds, the indicating lights are varying so quickly with the calculation that they cannot be visually read. To permit slower speed checking, the buttons to the right of the neon indicator panel have been provided (Figure 8). Depressing the PROGRAM TEST button prevents the normal high speed progression of program steps and causes the PROGRAM TEST indicator to light. If a single punch cycle at a time is now taken by the 521, the information will be read into the 604 but not automatically processed. Each manual depression of the bottom right button labelled *Program Advance* will cause the machine

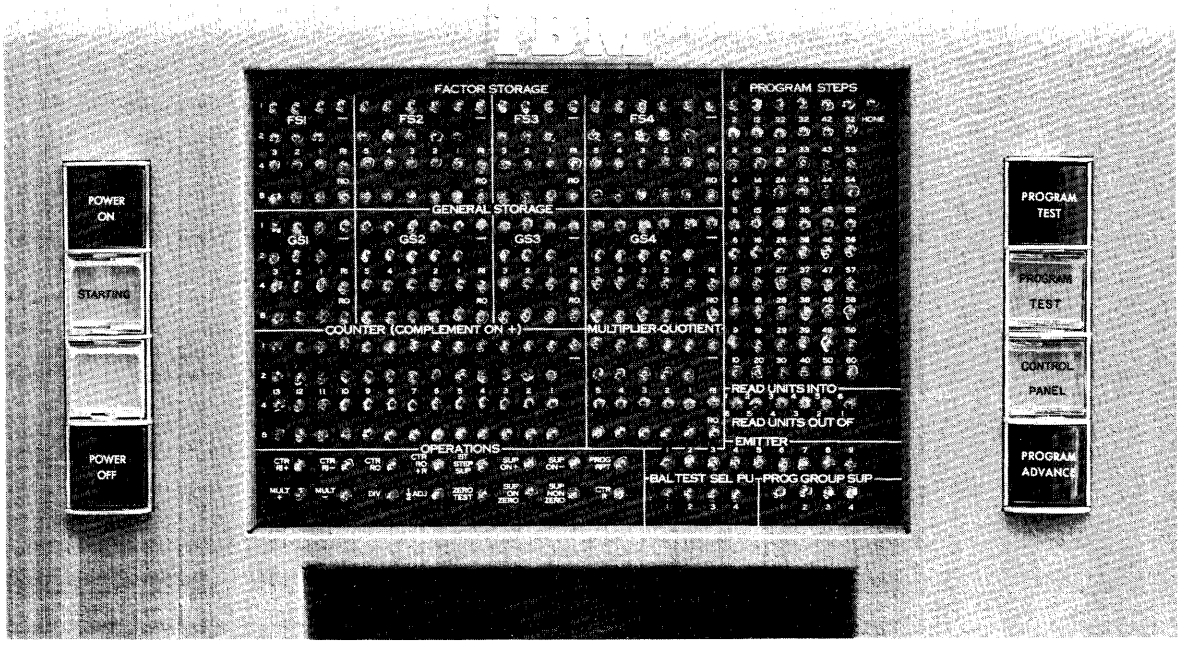

Figure 8. 604 Control Buttons and Neon Indicator Panel

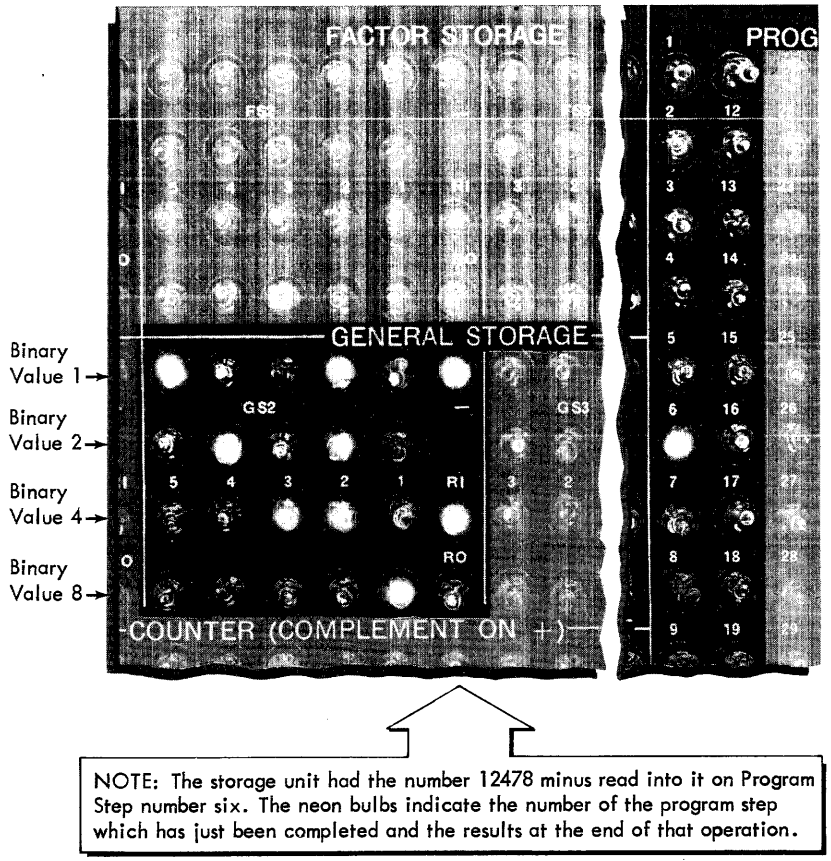

Figure 9. General Storage Unit External Neon Panel Section

to go through one program step at a time. In this way, the development of the calculation results can be traced step by step and compared with the expectations on the planning chart. The machine may be returned to normal operating condition at any time by again depressing the PROGRAM TEST button.

Also shown in Figure 8 are the other 604 control buttons and indicator lights. The CONTROL PANEL light directly above the PROGRAM ADVANCE button glows when the 604 is on, but there is no control panel inserted. The top button to the left of the neon panel is depressed to turn on the 604 main AC power. (There is a separate main power switch on the 521 which must also be turned on to allow cards to be fed.) While the tubes are heating, the STARTING light will glow to indicate that the machine is inoperative. After a two to three minute warm-up, the STARTING light will go out and the BLANK light will come on, indicating that the machine is ready for calculating. Depressing the bottom button will remove AC power from the machine. It is not advisable to turn the machine power on and off many times in one day since the repeated heating and cooling of the tubes shortens their life. In general, if the machine will be used again within two hours, it is advised that the power be left on. For periods in excess of two hours, the power should be turned off.

Since the start of 604 production in 1948, there have been a number of circuit revisions reflected in the wiring of varying suffixes. Machines wired successively up through the "G" suffix prints are all quite similar but

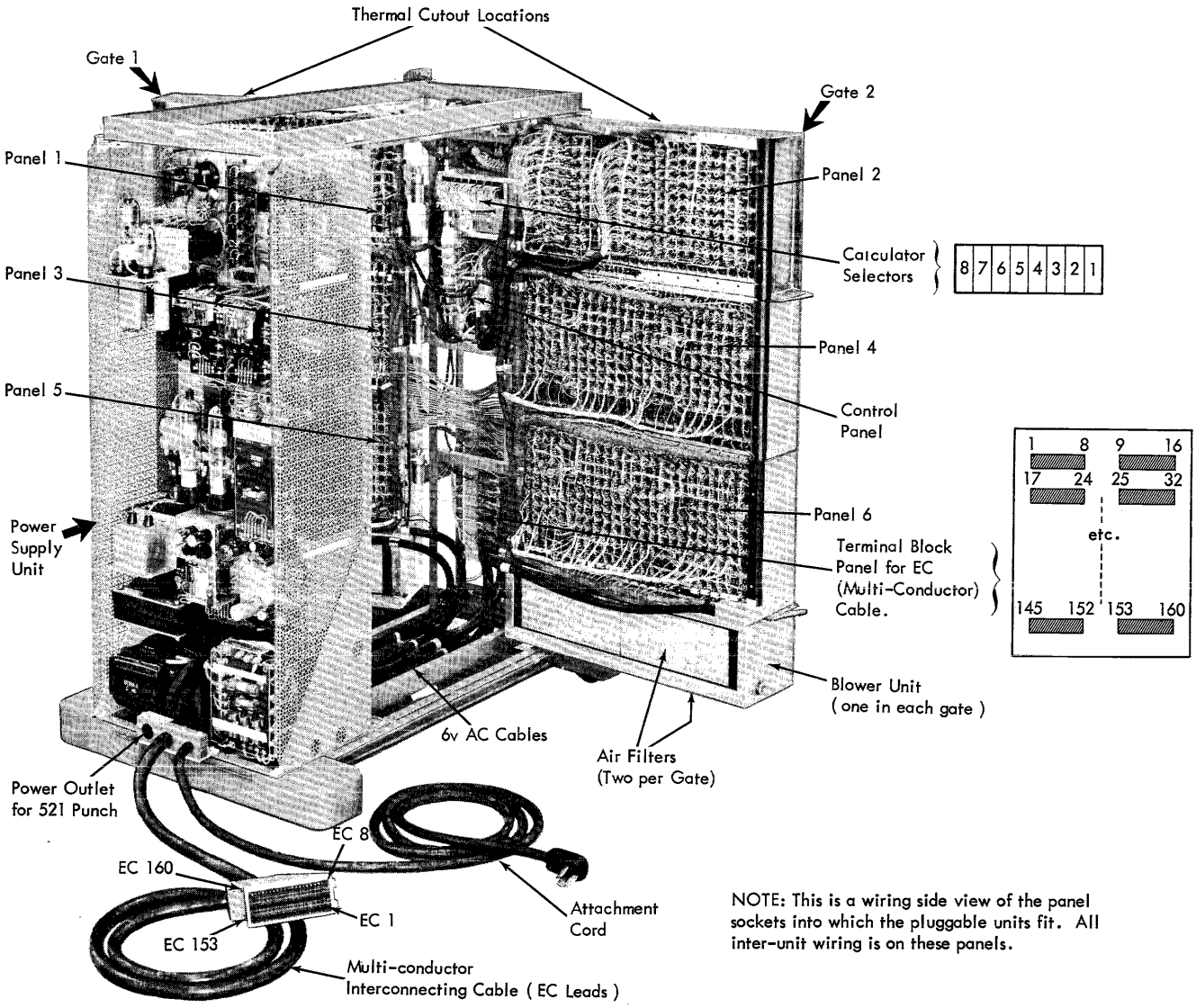

Figure 10. 604 G from the Wiring Side

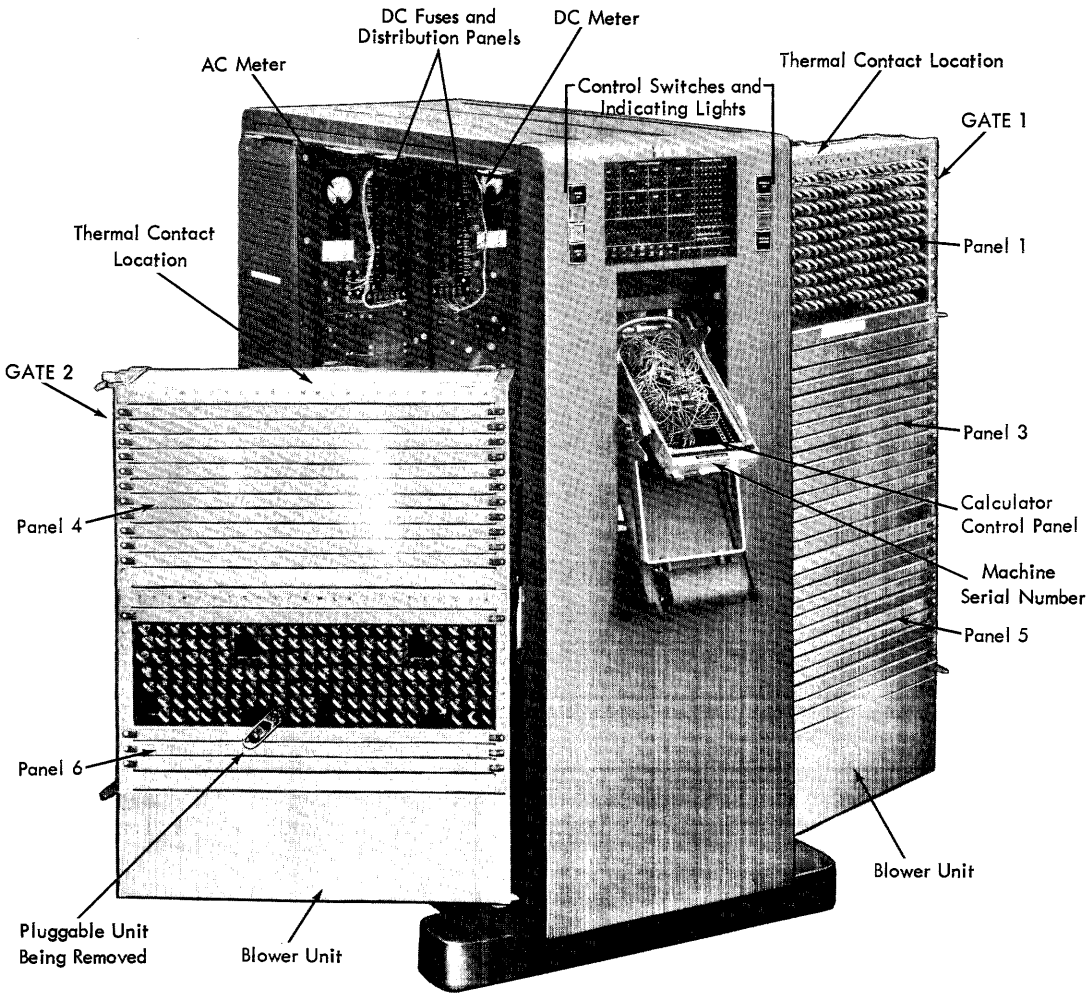

Figure 11. 604H from the Unit Side

with a gradual reduction in the number of calculating tubes required. By the time the H suffix was released, it was possible to eliminate an entire electronic panel through widespread relocation of functional circuits within the machine.

NOTE: In Figure 11 observe how the pluggable units are held in place by removable retaining bars. Since this is an H suffix machine, panel two is not needed. The thermal overload contacts turn off the machine to prevent permanent damage in case the gates get too hot due to restricted air flow or other improper operating conditions. The machine should not be run for any length of time with any retaining bars removed; the air flow produced by the blowers will escape through the retaining bar opening rather than proceding upward through the gate. This can cause overheating and machine shut-off due to the opening of a thermal contact. These thermal contacts are self-resetting as the temperature returns to safe limits.

Up through the "G" suffix, each machine was sent to the field with a complete fan-fold wiring diagram showing all electronic parts used in the machine. With the "H" suffix, a change was made to a *System Diagrams* type of representation which traces information flow through the machine but which does not show individual parts. This made circuit tracing somewhat easier for most examinations required in the field. Despite these changes, all 604's are completely compatible with regard to control panel wiring, operating specifications, general construction, and speed.

Removal of the 604 covers reveals the general physical nature of the construction. Figures 10, 11, and 12 show a 604G and a 604H from several angles, while Figure 13 shows a typical pluggable tube unit basket, Some twelve hundred of these are used in a normal machine.

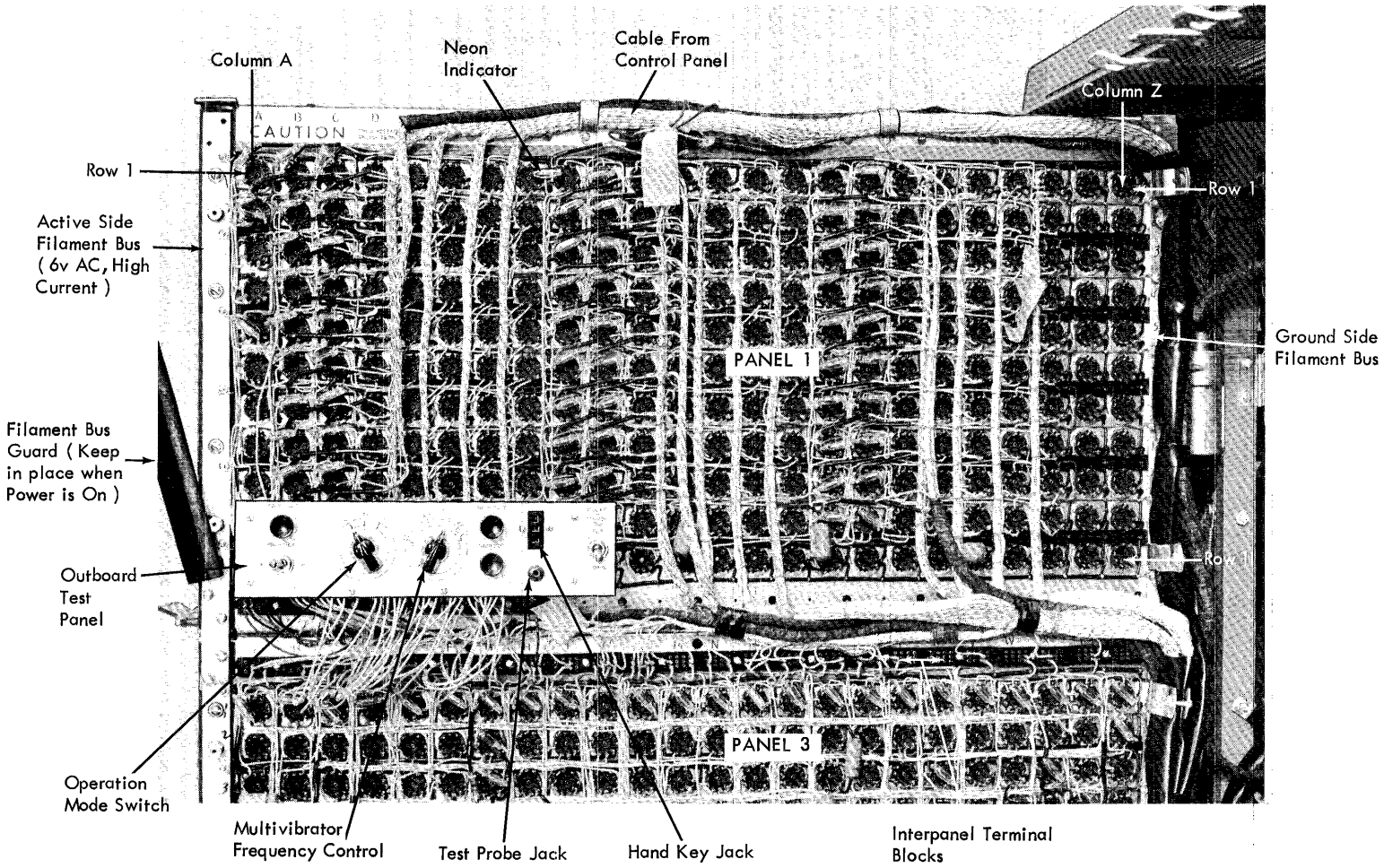

NOTE: Observe the heavy tube heater supply bus bars. The guards over these must be kept in place. While supplying only six volts, these bars can supply hundreds of amperes of steady current. Rings, screwdrivers, and other metal must be kept away when power is on to prevent severe personal burns and machine damage. The horizontal supply wires which run from the bus bars and supply heater power to each unit socket also have high current capabilities. USE EXTREME CAUTION WHILE WORKING INSIDE THE MACHINE WITH POWER ON. High voltage and high current are present.

With 1200 pluggable tube units mounted in the machine, it becomes most important to be able to identify the location of each one. This is done by means of a three character code such as 1-7K. The digit to the left of the hyphen represents the panel, the number to the right of the hyphen represents the row in that panel, and the letter designates the column (rows run across, and columns up and down). Notice that the letters I and O are not used as column designations to prevent confusion with the numbers 1 and 0.

Figure 12. A Closer View of the Wiring Side of Panel One, 604H

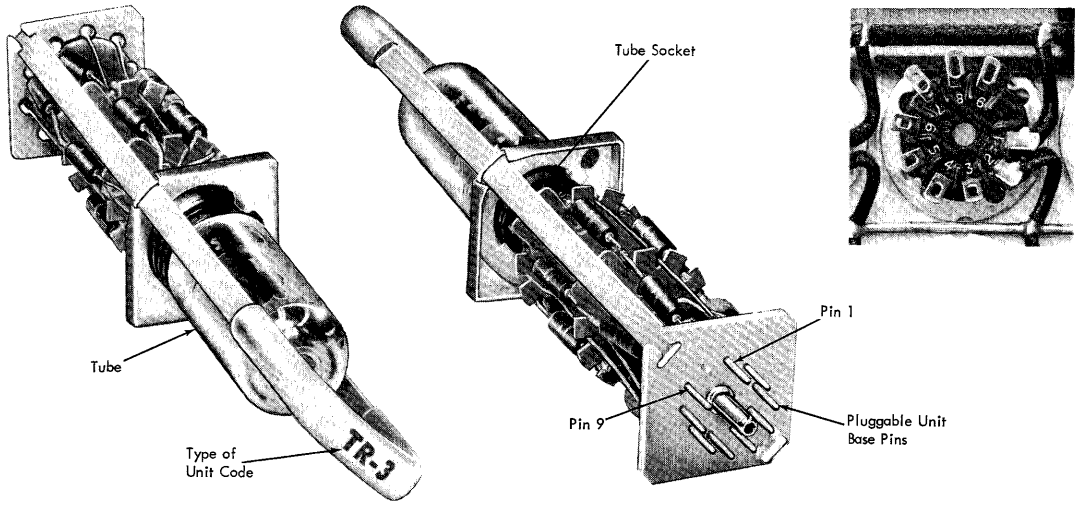

Figure 13. A Typical Pluggable Unit and Socket

NOTE: The readily replaceable units shown in Figure 13 come in a great many types to meet the requirements of various circuits. All of the calculating tubes and most of the electronic parts used in the circuits are mounted within such units. The pluggable units all have nine pin bases. The tubes themselves are either nine or seven pin types. Notice the unit type code printed on the handle and the covering of plastic insulating tubing. This tubing helps prevent shocks as the units are removed from and inserted in the machine.

The pluggable unit socket, as well as the tube socket, have their pin contacts numbered clockwise from the blank space while facing the bottom, wiring side, of the socket. When used in conjunction with the unit location code described in the note in Figure 12, it is possible to identify any unit socket pin connection in the machine. 1-7K4, for example, translates into panel one, row seven, column K, *unit* socket pin 4. Notice that the socket connection for the *tube itself* is never included in such a location code. Instead, such information must be written out (if never needed) as "tube pin 6 of the unit at 3-5W."

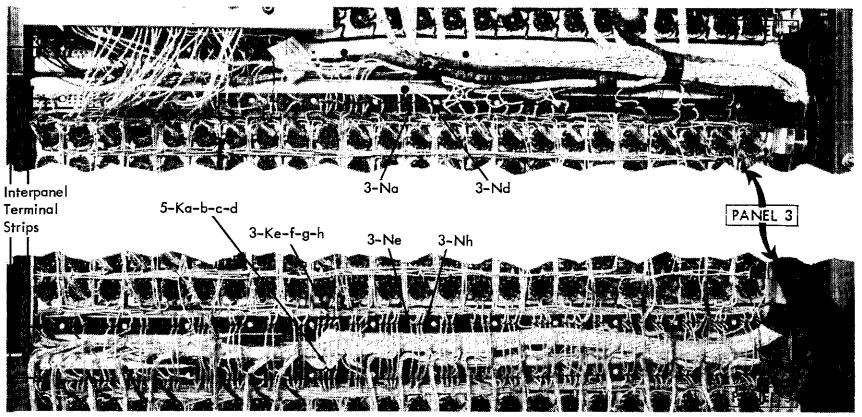

Figure 14. Terminal Strip Connections

NOTE: The terminal strip connections shown in Figure 14 are used for wiring between panels. Any column in any panel may have a four connection terminal block at the top or the bottom or both. The small letters, "a, b, c, d" always identify top tie points, and the small letters "e, f, g, h" the bottom. The absence of a terminal block at the top or bottom of a column does not alter this convention. Thus, a combination such as 6Mh would indicate a tie point on panel 6, column M, at the bottom and fourth terminal over, regardless of whether there was a terminal block mounted at the top of column M or not.

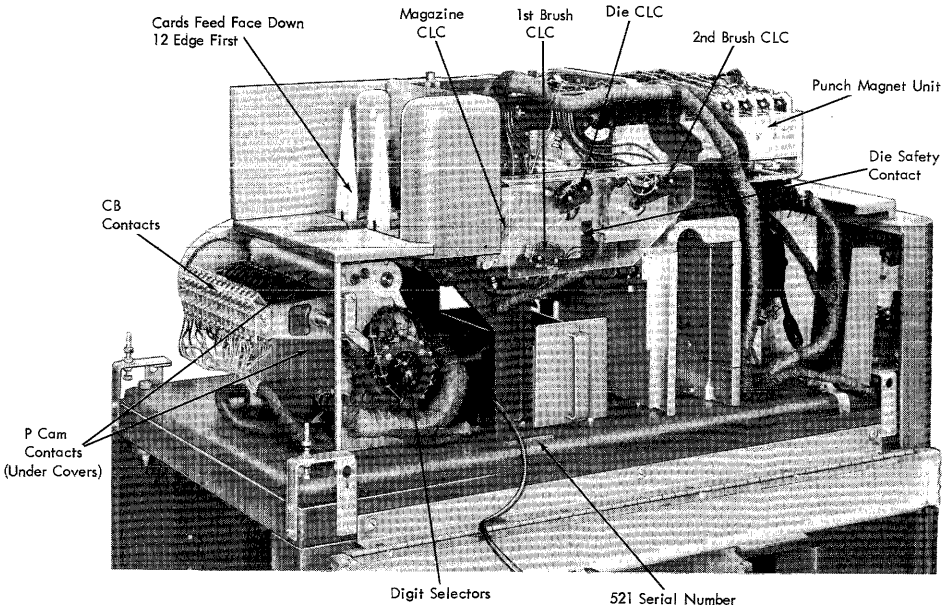

521 WITH CONVENTIONAL HOUSING

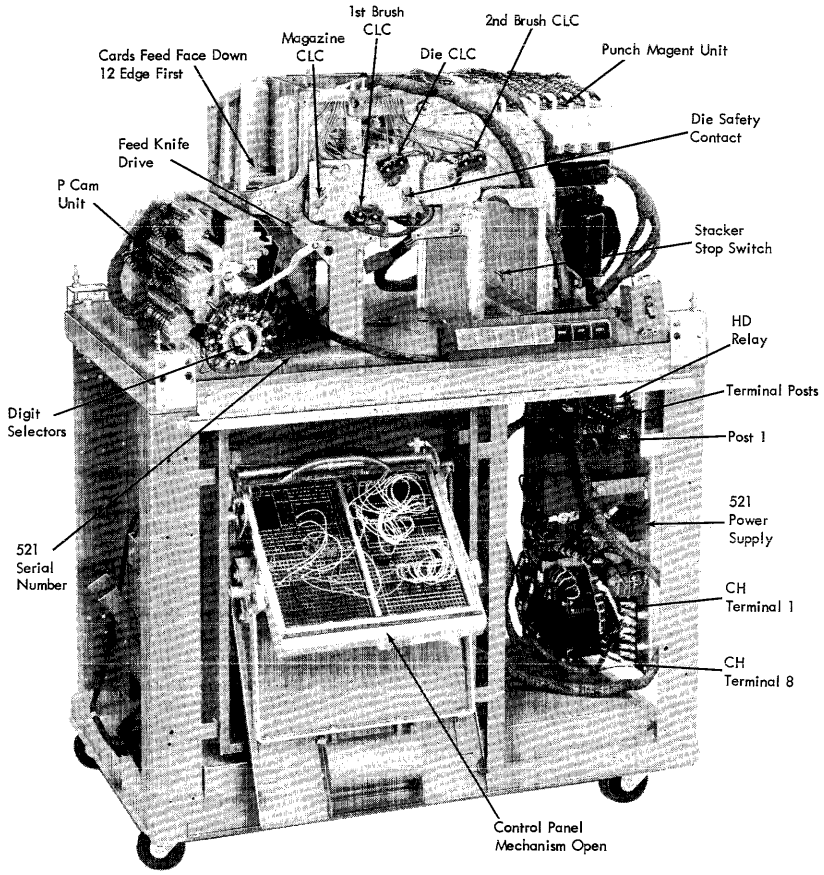

521 WITH REDESIGNED DRIVE

Figure 15. Front View of the Two Styles of 521's

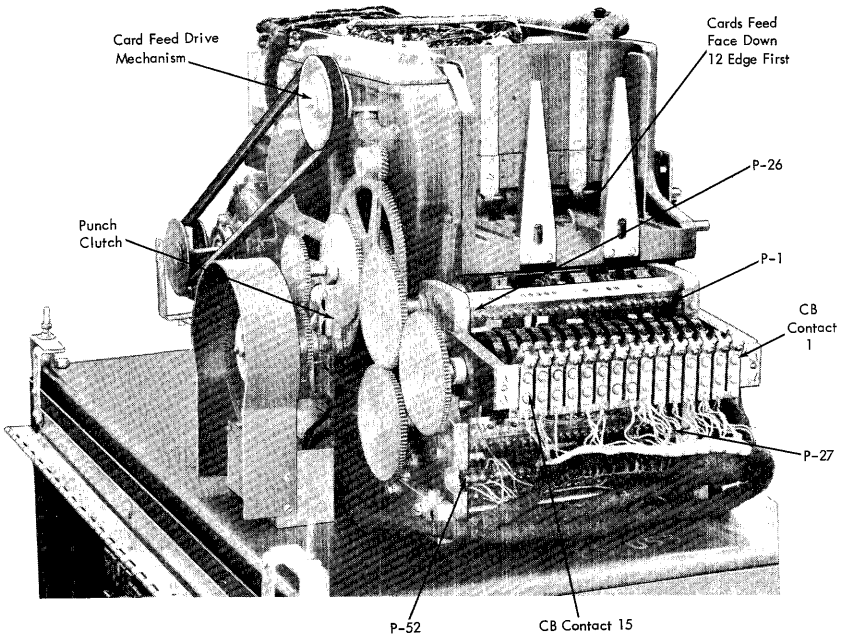

521 WITH CONVENTIONAL HOUSING

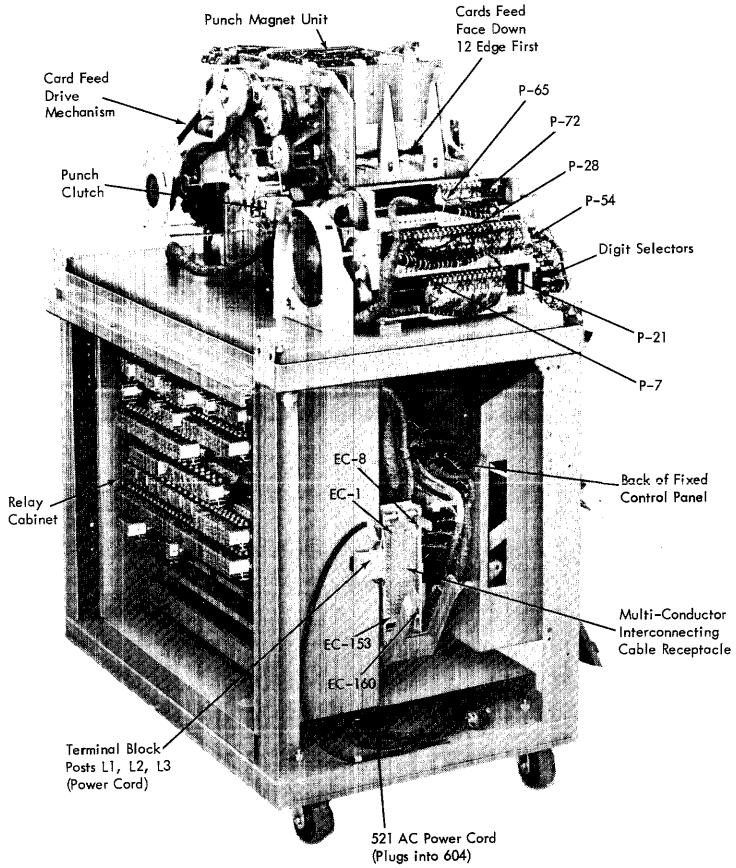

521 WITH REDESIGNED DRIVE

Figure 16. CB Side of the Two Styles of 521's

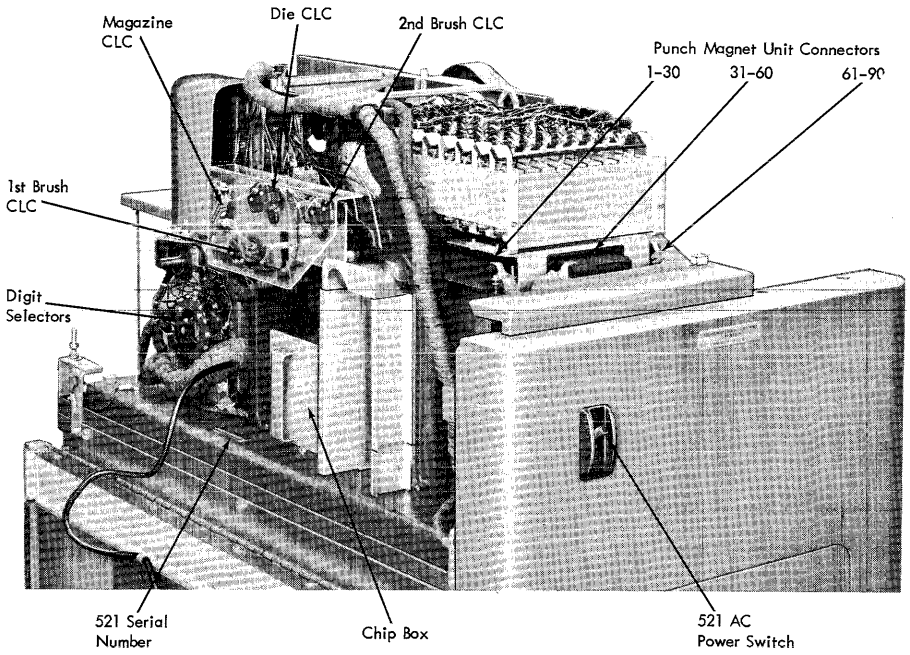

521 WITH CONVENTIONAL HOUSING

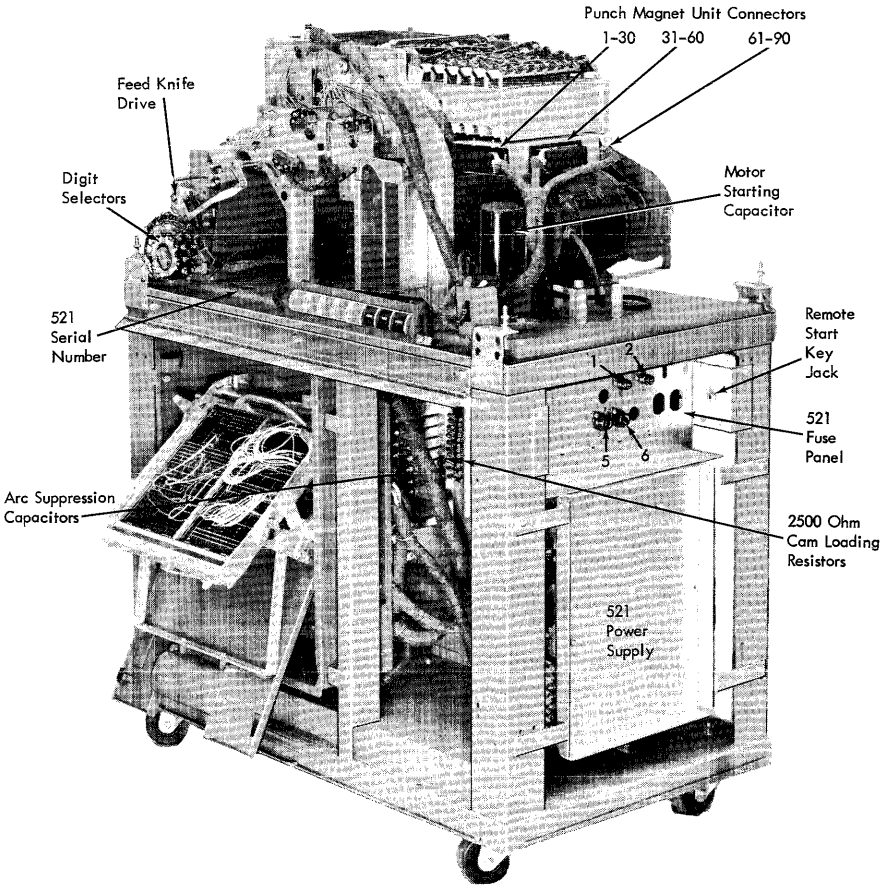

521 WITH REDESIGNED DRIVE

Figure 17. Fuse Side of the Two Styles of 521's

The following illustrations of the 521 punch show the location of the components, terminal numbering systems used, and general construction. Two styles of 521 punches have been used with 604 calculators. The conventional oil bath geneva drive housing has usually been supplied with machines prior to the 604H suffix, while a redesigned, smaller housing encasing only the geneva mechanism has been extensively used for the H suffix calculators. It is possible for either type of punch to be used with any 604 suffix type, but in some instances this will require some wiring changes in the machines. Field Bills of Materials are available to permit these changes where necessary, but in general, the 604 should be used only with the 521 shipped with it. These paired 521's and 604's do not usually have the same serial numbers.

Chapters to follow will cover in detail the electrical, mechanical, and electronic elements that make possible the successful operation of the 604 calculator. More detailed elements of control panel wiring will be explained at that time. If more information of an operational nature is required, the 604 *Manual of Operation* should be consulted.

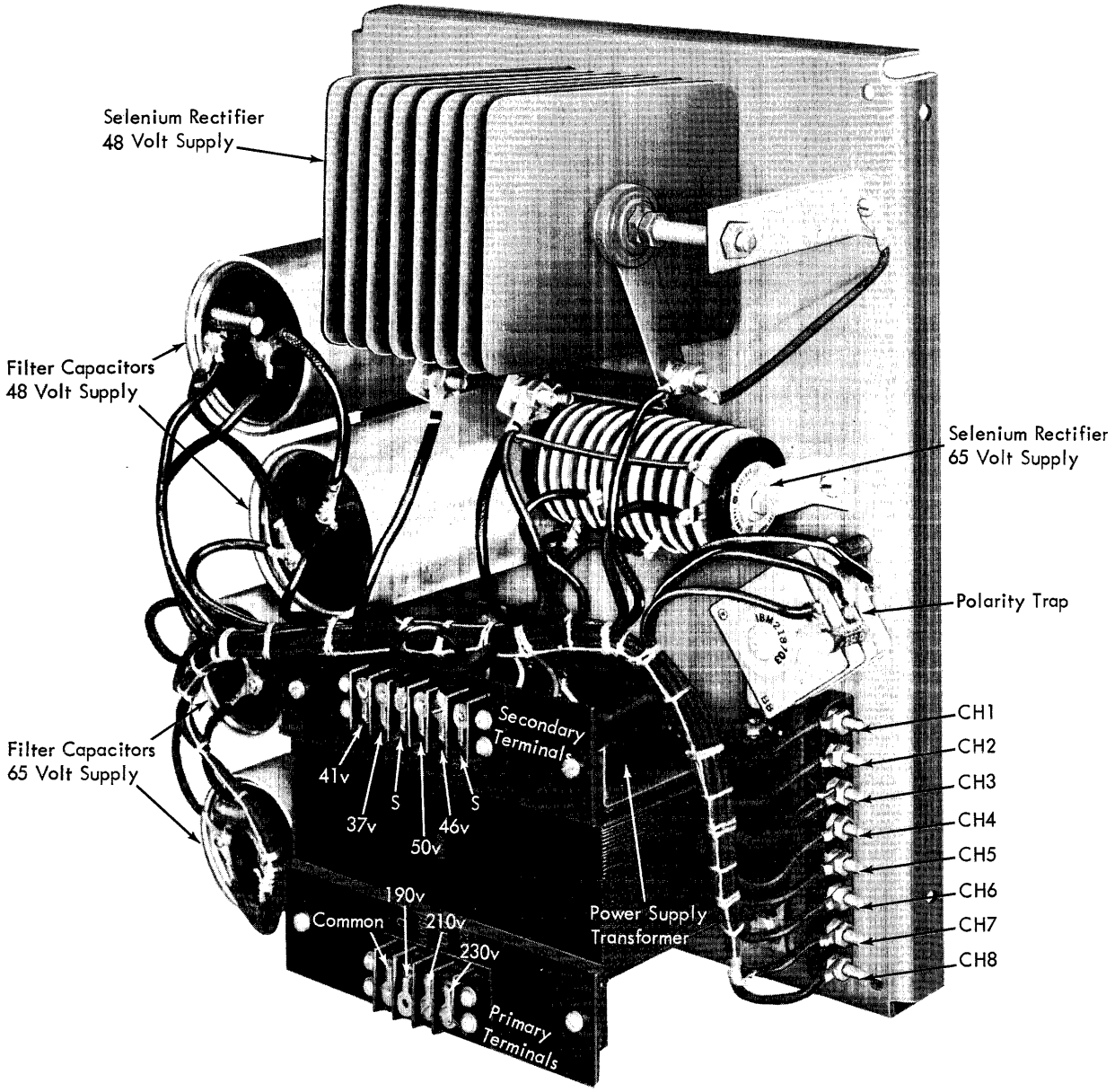

NOTE: The 48 volt supply provides power for the relays, running circuits, and contact rolls. The 65 volt supply is used by the electronic control and punch-out circuits.

Figure 18. The 48 Volt and 65 Volt Power Supplies of the 521

Principles of Electronic Operation

THIS CHAPTER will cover the principles and operation of the basic 604 "electronic building blocks" and will show how "freed" electronics is able to do already familiar jobs.

Both G suffix and H suffix circuits are covered in this and following chapters. F suffix circuits are similar to the G, though unit locations may differ. Where the F suffix circuit operation is much different, separate descriptions are included.

All circuits are first covered in general form, and then followed by a detailed description as it applies to specific suffix machines. Each circuit description, while dependent upon the objective introduction, is complete in itself. Thus, in studying the H suffix machine, no reading need be done in the sections labeled "G." It is suggested that only one machine type be studied at one time.

Electrons have long helped IBM machines perform, largely through electro-mechanical effects. Relays, mechanical counters, clutches, and ratchet control mechanisms are all examples of mechanical devices controlled by electron flow. In the 604 unit, IBM released a machine which freed electron actions from mechanical inertia. Electronic building blocks were developed to do the jobs previously done by electro-mechanical means.

Instead of relays, electronic switches and triggers are used; instead of counters, trigger combinations were developed, etc. Only the work involved in reading and punching IBM cards has remained mechanical. The increase in calculating speed made possible by freeing electronics from mechanics can be seen by a typical comparison: a normal wire relay can pick in three milliseconds (three thousandths of a second), and for good design, five milliseconds minimum time must be allowed. Its electronic counterpart, an elementary trigger, will flip (or "pick") in two microseconds (two millionths of a second), and five microseconds allows a good margin of safety. Even with the conservative design of the 604, which allows a ten microsecond flip time, this gives a five-hundred-fold speed gain.

BASIC CONCEPTS

THE BASIC CONCEPTS of practical electronics are quite simple. Present theory is that all matter consists of atoms having a central nucleus around which one or more small particles called electrons spin rapidly. An electron which has been pulled away from its nucleus is called a *free electron.* Electrons each have a negative charge and repel one another. A group of free electrons in an area makes this area negative. Given a chance, this accumulation of electrons will try to flow to any other area that is less "crowded" (that is, less negative). An area which has a shortage of electrons is called positive and has a considerable attraction for free electrons. Because of this, electrons always flow from negative to positive. Any material capable of easily carrying a flow of electrons is called a conductor. Any material through which free electrons have difficulty passing is called an insulator. Those materials in between these extremes may resist the flow of electrons to one degree or another and are called resistors. Some combinations of materials will let electrons flow in one direction, but not in the reverse. These are called semi-conductors (half-way conductors). One other important fact is that it is quite possible for an electron to make its force (or presence) felt through an insulator without itself actually passing through the insulator.

The amount of force with which electrons are trying to move from one place to another is measured in an arbitrarily assigned value called a volt. Free electron unbalance being a relative matter, voltage must always be specified as between two areas. Throughout our circuit descriptions, the voltages given will be with respect to the metal frame of the machine (which is called ground). Any exceptions to this convention will be clearly pointed out. Any point having an excess of free electrons will have a negative potential and be noted as a minus voltage, such as —100 volts. Such voltages can be spoken of as "so many volts below ground." As the converse, any point having a shortage of electrons

has a positive potential, and would be noted as a plus voltage (such as +150) and spoken of as "volts above ground." Two points, one at —100 volts (with respect to ground) and the other at +150 volts (again with respect to ground) are actually 250 volts apart with respect to each other.

The amount of opposition a circuit presents to the flow of electrons is expressed in an established unit called the ohm. The more resistance a circuit has, the greater its ohmic value. Most of the resistances involved in electronic circuits are in thousands of ohms. As a shorthand notation, the symbol "k" is used to indicate thousands. A 68,000 ohm resistor can thus be written as 68k on diagrams, within text, etc. A convention which has been adopted for the 604 is to leave off the "k" on machine diagrams; all values being understood as in thousands of ohms. 68 on a 604 machine print means 68,000 ohms. A 470 ohm resistor is written as .47. This IBM convention is applied generally to components physically located within pluggable units; external components or components located within the punch or references within the text will be found using the "k" or with the full value written out.

Along the same lines, capacitor values in the 604 are understood to be in micromicrofarads unless a symbol is added to indicate otherwise.

The motion or flow of electrons past a given point in a circuit is measured in an arbitrary unit called the ampere (which represents an actual number of electrons passing a given point in one second). This unit of measurement is somewhat too large for most of our calculating circuits, and as a result the term milliampere (abbreviated, ma) will be used frequently. This is simply one thousandth of an ampere.

With these few facts properly applied, any calculating circuit in the 604 can be explained on a practical level. No attempt will be made to go into electronics in depth, but enough explanation will be given to help explain most conditions encountered in the trouble-shooting or learning process.

The circuits in the 604 are designed to work from a ten microsecond pulse of fifty or one hundred volts amplitude. This means that the steady state voltage (electron pressure) at a particular point is shifted either upward or downward by fifty or one hundred volts for a ten millionths of a second time period. This change in voltage level can be passed on to other circuits to cause certain actions. Some circuits will produce or use shifts of longer duration. Where these shift durations exceed twenty microseconds in time they are referred to as gates (since they are generally used to "open" a circuit so a ten microsecond pulse or series of pulses can pass through). It is the control and generation of these pulses and gates that constitutes the whole of 604 circuitry.

A pulse or gate that is more positive (or less negative) during its active time than otherwise, is called a "plus pulse or gate" even if the "up level" is still negative with respect to ground. Similarly, a pulse or gate that is negative (or less positive) during its active time, is spoken of as a negative pulse or gate. For example, a point which rests at plus 150 volts and which drops to plus 50 volts for ten microseconds during active time, is said to have a minus 100 volt pulse available even though the signal did not go negative with respect to ground at any time.

BASIC ELECTRONIC CIRCUITS

NOT ALL of the basic circuits to be described in this section are used in both the G suffix and H suffix machines. Following the headings for the various circuits, the machine type or types using such circuits will be indicated in parentheses.

Power Supply Notation (G and H)

There are five DC supply voltage levels used in the 604 (plus two in the 521 Punch). These five 604 power supplies are numbered in accordance with the Electronic Industries Association coding as follows:

Plus 150 volts is supply number 2.

Plus 75 volts is supply number 3.

Minus 100 volts is supply number 5.

Minus 175 volts is supply number 6.

Minus 250 volts is supply number 7.

Whenever a point in a circuit requires one of these potentials, that point on machine wiring diagrams will be shown connected to a small square box identified inside with the proper code number. The diagrams in this manual will also make frequent use of this coding though in addition the DC voltage equivalent will often be written near the box to help develop familiarity with the coding.

The Inverter (IN) Unit (G and H)

This is the basic electronic circuit from which most others are derived. In its simplest form the circuit con-

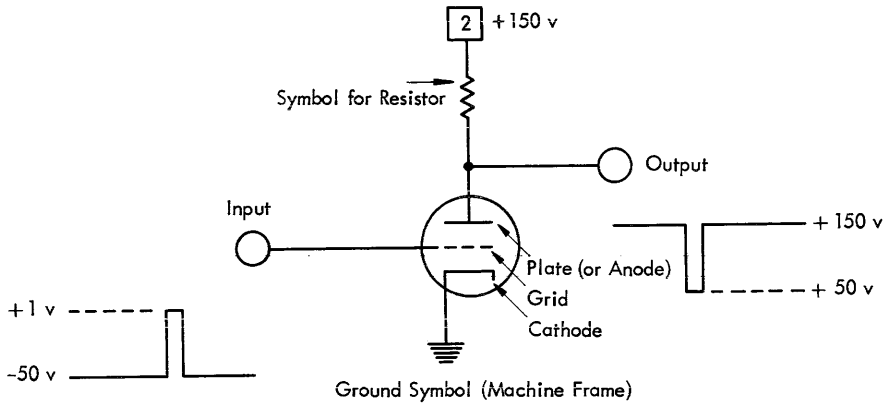

Figure 19. The Inverter

sists of a triode vacuum tube and one resistor arranged as shown in Figure 19. A signal which is applied to the input point goes through the circuit and comes out inverted exactly as indicated by the illustration. Thus the name "Inverter." This inversion is a characteristic of *any* vacuum tube circuit *where the signal goes into a grid and comes off the plate.* However, in the 604 the term "Inverter" is applied only to a particular class of pluggable units using triode tubes. These units are all identified on the handle as "IN" (to designate the general class) followed by a number (to identify the variations within the class). IN-1, IN-2, IN-15, etc., are typical types.

An understanding of this circuit is most important. The heart of it, of course, is the tube itself. This consists of a length of heating wire folded or twisted inside a cylinder called the cathode. Electrons are boiled off the cathode surface when this assembly is heated by

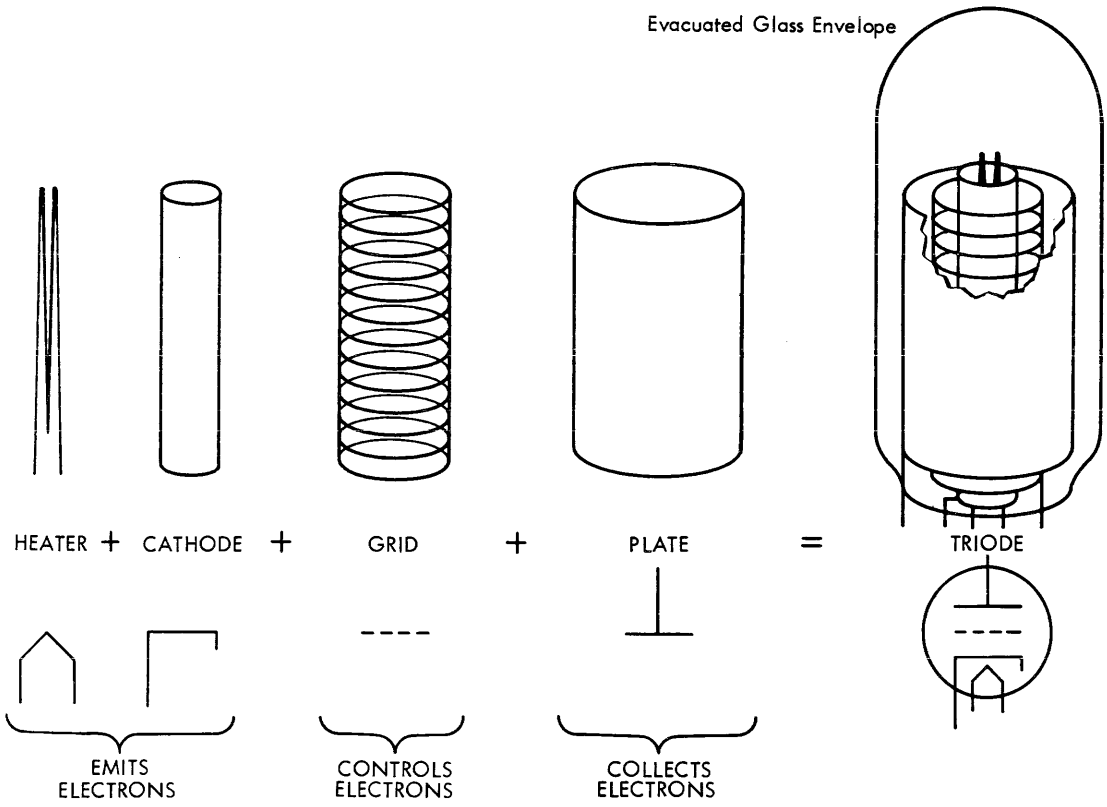

Figure 20. Development of the Triode Tube

passing a current through the heater wire. If a metallic cylinder (called the plate or anode) is placed around the cathode (but separated from it) and this entire assembly sealed in an evacuated envelope, it will be possible to make electrons travel from the cathode to the plate. This is done by making the plate positive with respect to the cathode. As the electrons are boiled off the hot cathode, they tend to move toward a less "crowded" area and thus find the plate very attractive. Such a tube is called a diode (consisting as it does of two basic elements, the heater-cathode combination and the plate). This diode has one very important characteristic that makes it of practical value in circuits actually used in the 604H calculator: electrons are able to travel from the cathode to the plate if the cathode is hot and the plate has a positive potential with respect to the cathode; but electrons cannot travel from the plate to the cathode no matter what the relative voltages are. This is because the plate is not heated and thus does not "boil off" electrons. The diode thus becomes a semi-conductor (a half-way conductor). Its practical use and application will be described later.

The triode tube used in the inverter circuit is a three element tube consisting of a cathode and plate with a *grid* inserted in the space between them. This grid consists of a coil of fine wire with spacing between each turn. Electrons can still pass between the grid turns and flow to the plate under proper conditions. See Figure 20.

With the cathode heated and a positive voltage applied to the plate, electrons boiled off the cathode will be attracted to the plate, as with the simple diode, except that they will now have to pass between the turns of the grid wires. If a negative, repelling voltage is applied to the grid with respect to the cathode, the electrons emitted by the cathode will not feel the attraction of the plate as much as they did before. As a result, the flow of electrons from cathode to plate will be greatly reduced. If the grid voltage is made sufficiently negative with respect to the cathode, it will be so repellent to the electrons that none will reach the plate. The negative grid voltage which will completely stop current flow to the plate for any particular tube and plate supply voltage is called the "cutoff" potential. For the triode tubes and voltages used in the 604 this value is ten volts negative or less. Once a tube has been cut off by driving the grid sufficiently negative, driving the grid still more negative has no further effect. From these facts, the action of the basic inverter circuit can be explained.

In Figure 21 a resting voltage of minus twenty with respect to the cathode is applied to the grid. Because of this, there is no electron flow through the tube (the tube is cut off). As a result, there is no electron flow through the 20,000 ohm resistor between the plate of the tube and the plus 150 volt supply. The output point is therefore at the same level as the supply voltage, 150 volts positive with respect to ground.

By throwing the switch in Figure 21 from A to B, the potential on the grid of the triode tube with respect to the cathode will be changed from minus twenty volts to zero. Electrons boiling off the cathode will now no longer feel a repelling grid and will instead be strongly attracted to the positive plate. As a result of this, electrons will flow through the tube and through the resistor in its plate circuit, causing a voltage change from one end of the resistor to the other. With the tube type used in the 604, at the supply voltage used (plus

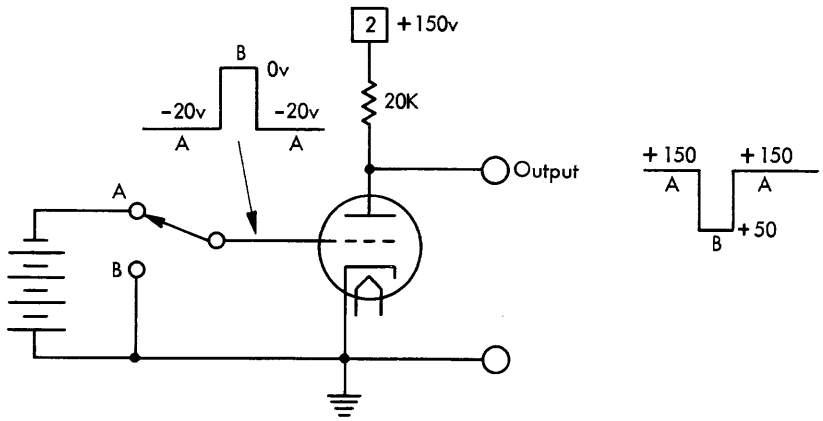

Figure 21. Basic Inverter Circuit

150), and with a 20k plate load resistor, 5 milliamperes of current will flow through the tube and resistor. By Ohm's law ($E=I\times R$) this indicates that a one hundred volt drop occurs across the plate load resistor. Since the +150 volt supply end of the resistor is rigidly held at +150, this 100 volt change must occur at the plate end of the resistor. This leaves +50 volts at the tube plate and at the output point. Returning the switch to the minus twenty grid volt position, A, will again cut off the tube and restore the plate and output point to plus 150 volts.

Two items about this action should be noted. First, during the active portion of this cycle, while the switch was thrown to B, the grid signal was less negative and thus more nearly positive than during its normal state. In other words, a positive (going) signal was applied to the grid. This, however, resulted in a lowering of the positive level on the plate of the tube where the output is taken. A negative (going) signal thus came from the output point when a positive (going) signal was applied to the grid. This is the inversion effect mentioned earlier.

A second point to note is that though only a twenty volt change was applied to the grid circuit of the tube, a one hundred volt change resulted in the output. This action of a triode, its ability to amplify an input signal, is used only indirectly in the 604 calculating circuits. The amplifying ability of a tube changes considerably with the aging of the tube, and any computer making much use of this factor would (unless constantly compensated) be rather unstable with the passage of time. The 604 generally uses tubes either in their full conduction state or cut off completely. While the total amount of full conduction current may vary through the life of the tube, the circuits are designed to work well with any normal variation.

PRACTICAL INVERTER CIRCUITS (G AND H)

There are twenty-seven types of INverter units used in the various 604 types. They all follow the theory discussed above, but practical considerations have introduced a number of variations. An IN type pluggable unit contains two separate inverter units. The tubes used for 604 inverter service are all dual triode types with characteristics (though not construction) somewhat similar to the commercial 6J6. These tubes contain two separate triode units sealed within the same evacuated glass envelope. The two cathodes of the separate sections are internally tied together electrically and the heaters connected in series. This allows a seven pin tube base to be used where ten pins would otherwise be required. Such tubes are called the 6J type class by IBM to identify directly interchangeable tubes of various designs and manufacturers.

The 5965 is a heavier duty type of dual triode used by IBM for occasional inverter service and for extensive service in other types of circuits. This tube has a nine pin base which allows separate connections to be made

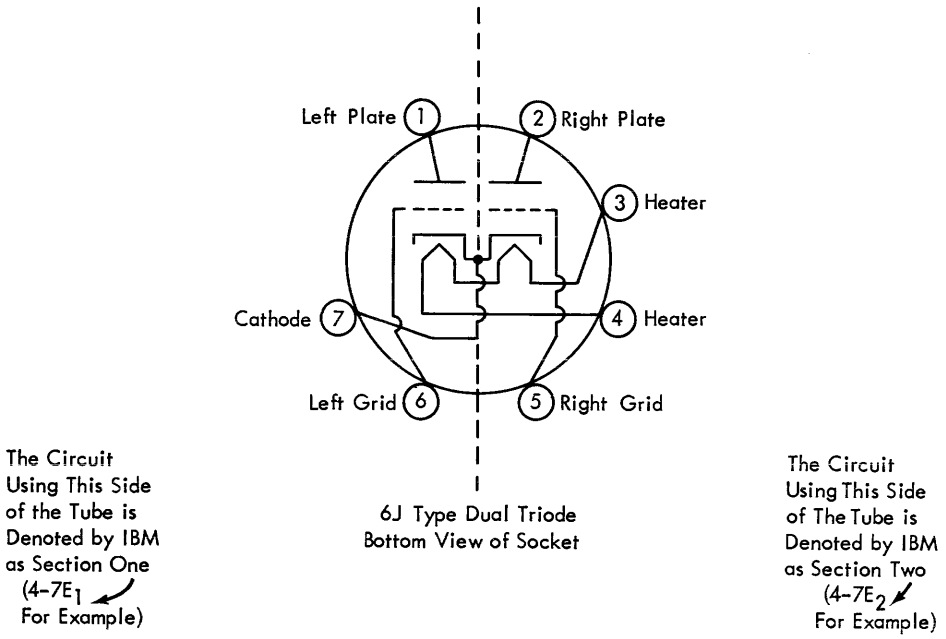

Figure 22. A 6J Type Dual Triode Pin Connection Diagram (Bottom View)

to each cathode. A tap is also made to the heater wire where it runs between the two tube units; this permits a 12 volt series connection or a 6 volt parallel connection of the two unit heaters. The parallel arrangement used by IBM for circuits using this tube type makes it possible for one section of a 5965 to have an open heater while the second section is heating correctly. This is not true of the 6J type with their internal *series* connection. The basing connections for these and other tubes used in the 604 can be found in the Appendix of this book.

Since two functionally separate triodes are available in one glass bulb, a great saving is made in the number of pluggable units required by the machine through including the components for two separate circuits in one unit basket. This does, however, require an addition to the pluggable unit location code described in Chapter One, Figure 12, in order to positively identify the particular circuit section of such a dual unit. A subscript 1 is added to the right of the location code (such as 4-7E_1) to identify the circuits used with the left half of the tube as drawn in the manufacturers' tube basing diagrams (Figure 22 and in the Appendix). A subscript 2 is used to indicate the circuits for the right half of the tube (such as 4-7E_2).

Because almost all vacuum tubes have heaters and their presence is so widely understood, it is common practice to omit the symbol for the heater wire itself when drawing a circuit diagram. This convention will be used throughout this manual. In certain tubes (used in the 604 only in the power supply) the heater itself is used as the electron emitter (cathode). No hollow sleeve cathode is used. In such instances the heater is called a filament and is always drawn on the diagram.

A typical and practical inverter circuit is shown in Figure 23. Three resistors have been added to the grid circuit of the theoretical stage discussed earlier. Inverter units are always driven from some other electronic source such as another inverter unit, power unit, trigger unit, etc. These units generally have a plate output which varies from about +140 volts with the tube cut off, down to +50 volts with the tube conducting. As was discussed earlier, the grid of an inverter must receive about 20 volts negative to reliably cut it off and a zero or positive condition to cause heavy electron flow. In Figure 23, the 390k and 470k resistors connected between the plate of the driving stage and a source of —100 volts acts to convert the driver plate voltage levels into a form usable at the grid of the inverter stage under discussion. Because of the electron flow from the —100 volts up through the 470k and 390k resistors and up through the 20k plate load of the driving stage, the voltage at the plate of the driving stage rests at about +140 volts with the tube cut off rather than the +150 volt level considered earlier. Point C, the connecting point of the three grid circuit resistors, will be found to be at about +30 volts if Ohm's law is applied to the voltage divider network. It would seem that the grid of the inverter

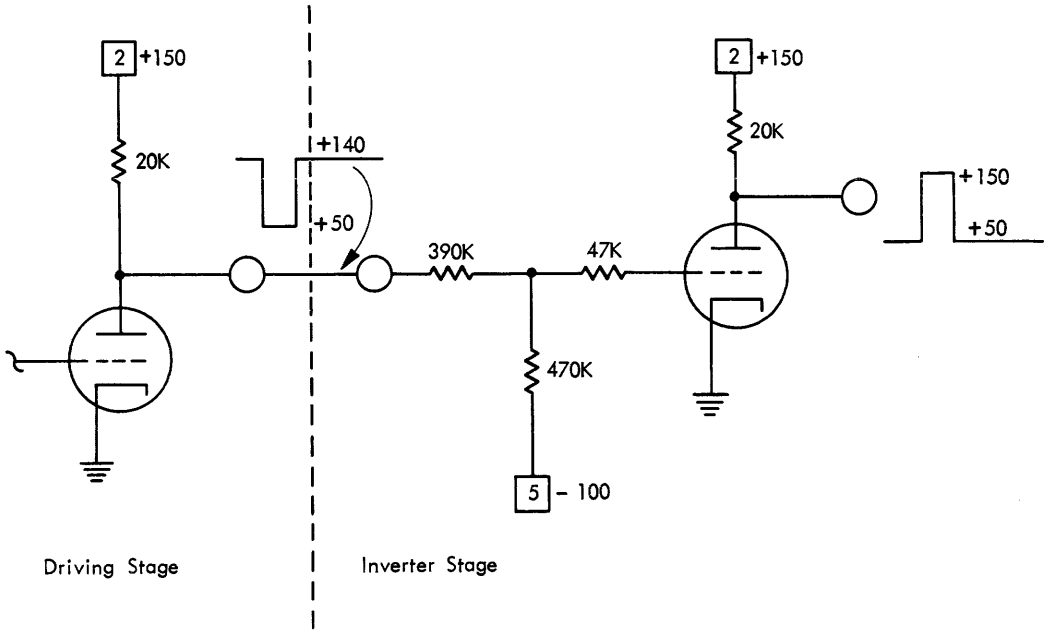

Figure 23. A Practical Inverter Circuit

would also be at plus 30 volts, but such is not the case *so long as the cathode of the inverter tube is hot.* The inverter tube grid is very close physically to the cathode. Whenever this grid goes positive with respect to the cathode, it draws from the cathode electrons which act to neutralize the expected plus potential. The grid current drawn reflects itself at point C and keeps that point also from reaching the expected +30 volts. The 47k resistor in series with the grid, as well as the high resistances of the other two grid circuit resistors, helps limit the amount of grid current actually drawn. This is important since too much grid current could melt the fine grid wires and destroy the tube. The circuits used within the 604 are so designed that no grid will ever be driven more than about one volt positive at the tube, regardless of the input signal applied to the pluggable unit pins. This potential is enough to make the tube pass the desired electrons from cathode to plate and bring the plate output down to about plus 50 volts. This is the condition of the inverter in Figure 23 when the plate of the driving stage is at its high, plus 140 volt point.

If the input to the driving stage is altered so that tube draws heavy current, the plate of the driving stage will drop to a voltage level near 40 or 50 volts. The resistance coupling network will now cause point C and the grid of the inverter stage to be at about −20 volts, cutting off current flow within the tube, and permitting the inverter plate and output point to rise to +140 to 150 volts (depending on the circuit connected to the plate). It can be seen that by circuits such as this, one tube can be used to control another. This method of coupling between tubes is called straight resistance or DC coupling and permits a direct current condition to be passed and held between tubes. In the example given, as long as the driving tube is conducting, the inverter tube is cut off, and vice versa, regardless of the time involved.

INVERTER CIRCUIT VARIATIONS (G AND H)

Certain variations of the basic inverter circuit will be found in a number of the pluggable unit types. These variations will be discussed separately, but they may be used in any combinations within any pluggable unit type. Each half of an IN unit may use different variations and units other than the IN type will use these same principles. A study of the unit diagrams in the Appendix will show the actual circuits used in any 604 pluggable.

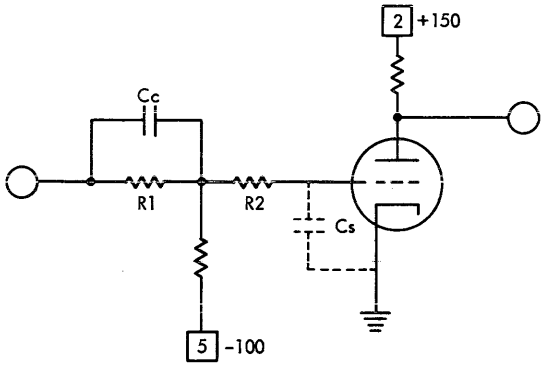

Figure 24. The Compensating Capacitor

The Compensating Capacitor. An understanding of the need for the compensating capacitor, Cc in Figure 24, will require some discussion of the characteristics of a capacitor. Any two conductors that are insulated from one another form a capacitor, the symbol for which is quite representative of its construction. The closer these two conductors are to one another, and the larger their surface area, the greater their capacitive effect. A large number of free electrons can be trapped on one or the other of these conductors or a large number of electrons can be removed from one of the conductors and not permitted to return. In both of these cases, the capacitor is called "charged" meaning the electron distribution is unbalanced. Putting these electrons on a capacitor or taking them off, takes an amount of time which is directly proportional to the resistance through which the electrons have to pass to get on or off the capacitor. The actual electrical size of the capacitance directly affects the voltage (electron pressure) to which a capacitor will charge through a given resistor in a given amount of time. The practical effect of this is that a capacitor will not instantaneously change the voltage across its conductors (which are generally called plates). While acting as an open circuit for long term steady voltage conditions, the capacitor acts as a temporary short circuit for any *changes* in the applied voltage.

The grid and cathode of a vacuum tube and the wiring to it, being conductors insulated from one another, constitute "invisible," stray capacitance drawn in as Cs in Figure 24. Before any change in voltage can be produced between the grid and the cathode of the tube, and thus affect the cathode to plate electron flow, this capacitance must have its voltage balance altered. Any signal voltage change applied to this capacitor must come through the resistors R1 and R2. R2 is so

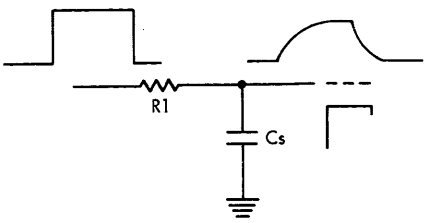

Figure 25. Stray Capacitance

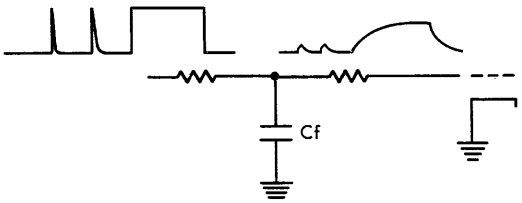

Figure 27. An External Capacitor Used to Desensitize a Circuit

small in comparison with R1 that it may be neglected in this phase of the circuit operation. The relevant parts of the circuit, without the compensating capacitor, are drawn in Figure 25.

A crisp input signal is rounded over and distorted on the grid of the tube because the stray capacitance, Cs, shorts out and delays the voltage changes. The capacitor cannot rapidly change its charge through the series resistor R1. Reducing the resistance in R1 would reduce this rounding but would also disturb the steady state conditions of the circuit.

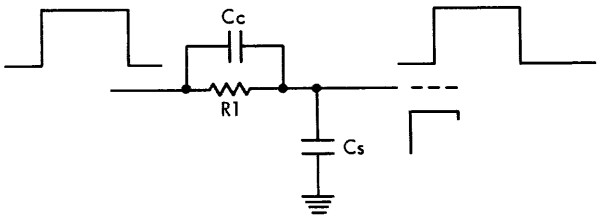

Figure 26. RC Circuit with Compensating Capacitor

Placing the compensating capacitor, Cc, in parallel with resistor R1 changes this action considerably. A capacitor of the proper size, acting like a short circuit to rapid voltage changes, can short these changes around R1 and force the stray capacitance to respond instantly so the voltage on the grid of the tube looks exactly like the applied signal. For steady state conditions no change is noticed by the circuit, the resistors alone providing the needed actions. Any 604 circuit that must have a fast response will be found to use a compensating capacitor.

The Desensitizing Filter Capacitor. The sensitivity of a circuit to short duration spikes, called noise, can be greatly reduced by effectively *increasing* the stray capacitance and eliminating the compensating capacitor. Figure 27 shows an external capacitor, Cf, connected between the grid circuit and ground. This filter or desensitizing capacitor shorts to ground any short, rapid changes, and delays the circuit response to longer duration impulses. Both of these actions can be useful in certain areas.

The Coupling Capacitor. Another use for a capacitor is to eliminate the direct voltage coupling between two stages while permitting any voltage changes or signals to pass through. A side result of this is that some signals can be passed through a capacitor coupling network substantially unaltered, while other signals of longer duration are converted into pulses. Both of these effects are applied in 604 circuitry.

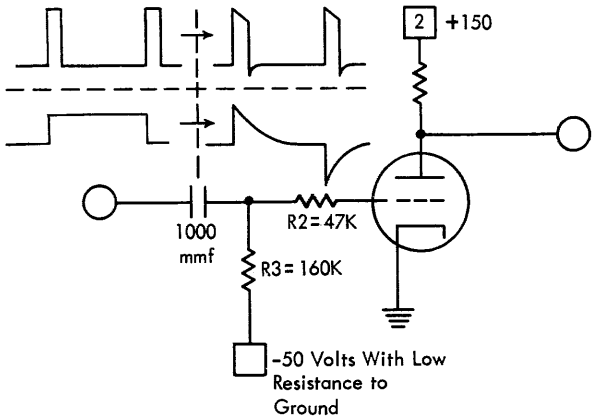

Figure 28. The Coupling Capacitor

Figure 28 shows the basic capacitor coupling circuit and its effect on typical input signals. The coupling resistor has been removed and its place taken by a capacitor. The effect of this change is always to separate the DC levels of the two circuits. What it does to the signals applied depends on the type of the signal and the value of the capacitor and any resistance in series with its charge path. With the values given in the figure a voltage pulse of ten microseconds will pass through the network with very little change, while a

gate of two hundred microseconds is considerably altered. The important relationships are between the time length of the signal and the time constant of the resistance-capacitance network. The time constant can be determined from a simple formula:

$$T = RC$$

Time Constant (in microseconds) = Resistance (in millions of ohms) times Capacitance (in micromicrofarads).

If the duration of the applied pulse in microseconds is one tenth or less of this RC product, that pulse will be passed substantially unaltered. If the applied pulse is five or more times as long as the RC product, the signal will be peaked into a curved sawtooth-like pulse with a practical width in time of about twice the RC product. In-between relationships will produce intermediate effects.

The circuit being investigated must at times be carefully studied to determine the value to use for the R in the formula. In Figure 28, the value normally used would be the 160k (.16 megohms) of R3. If the signal drives the grid into the positive area *where grid current is drawn,* however, the 47k resistor can be considered as being in parallel with the 160k resistor. This is because a tube, while drawing grid current, has a low resistance effectively between the grid and the cathode (on the order of one thousand ohms). It is thus possible for a circuit to have one time constant for a positive going signal and a second for a negative going signal.

The Tapped Output. In some instances the full one hundred volt change normally produced at the plate of a 604 circuit tube is more than required. Any desired degree of signal output (generally about 2/5, or 40 volts change) can be obtained by taking the output not from the plate, but instead from a tap on the plate resistor or from a connection between two series plate resistors. This is shown in Figure 29. The closer the tap is (resistance-wise) to the plate, the greater will be the output voltage change.

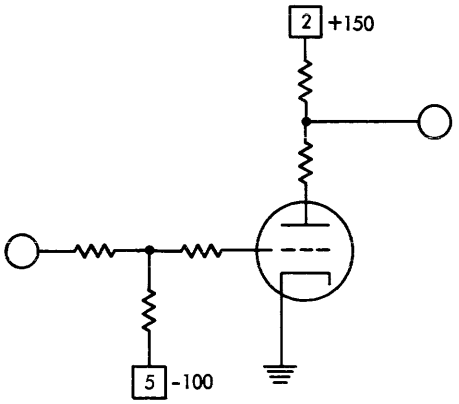

Figure 29. The Tapped Output

The Slave Unit. Some pluggable units have been designed to work only in parallel with other units, sharing their components, and depending on the presence of these other pluggable units for voltages, etc. These dependent units have very few of their own components and are called slave units. Figure 30 is typical.

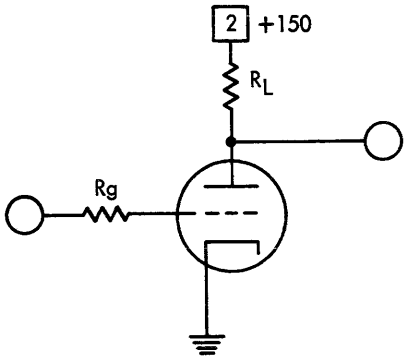

Figure 30. The Slave Unit

The plate load resistor, R_L, and the grid current limiting resistor, Rg, may either or both be missing within the slave unit itself, but when the complete circuit is traced through the units to which a slave is connected, the expected components can be found.

To repeat an earlier statement about all the foregoing circuit arrangements, these principles and variations will be found singly and in combination in all types of units in many circuits throughout the 604.

USES OF THE INVERTER

There are seven general uses for inverters within the 604:

1. inversion
2. level setting
3. clipping and shaping
4. delay
5. isolation
6. OR circuit (mixing)
7. AND circuit (switching)

As was true with the circuit variations, these uses may be applied singly or in combinations. No other

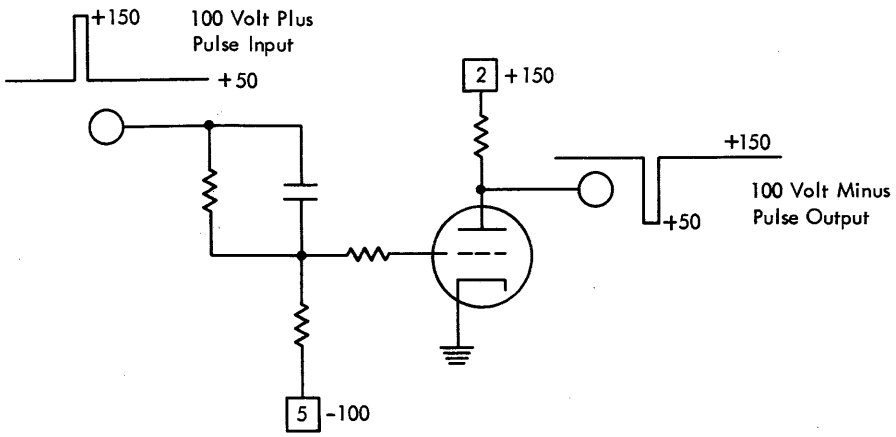

Figure 31. Signal Inversion

type of unit is applied to so great a variety of different jobs.

1. Signal Inversion (Figure 31). Particular types of circuits require a particular direction of signal shift to produce the desired action. A trigger may require a negative pulse to cause it to flip at a time when only a positive pulse is available. Running this pulse through an inverter converts it to the desired polarity. Inversion of a negative pulse or gate to a positive signal is also easily accomplished.

2. Level Setting (Figure 32). A minus 25 volt to plus 25 volt signal, for instance, can be converted to a +150 volt to +50 volt plate output level. In this example not only was the level changed, but the signal was also inverted and amplified in the process. The inversion can be overcome by running the new signal through a second inverter. The amplification can be neutralized by a tapped output. (If a second inverter was used to restore the original signal polarity, the tap would be on the output resistor of the second inverter.)

Figure 32 shows a single, inverting level setter with the optional tapped output shown in dotted lines. Also in Figure 32 is introduced the signal level code used in the 604. Signal levels are held to a small number of possible variations which can be identified where necessary by small, parenthetical letters. A "(c)" near a wire indicates a signal level from minus 25 to plus 25, such as is obtained from the output of a Cathode Follower (to be described later). A "(t)" indicates the tapped plate output signal with a normal 50 volt shift from about +150 to +100 volts. An unlabeled line is the standard, full plate level shift of 100 volts. There is also a level used to drive a triode switch and called the triode switch level, identified as "(s)", which runs from 0 to —40 volts. The triode switch uses IN units but will be described in later pages.

3. Clipping and Shaping (Figures 33 and 34). It takes sharp, flat, noise free signals to insure proper operation of the 604. As pulses are run throughout the machine, they may become distorted and "sloppy." This

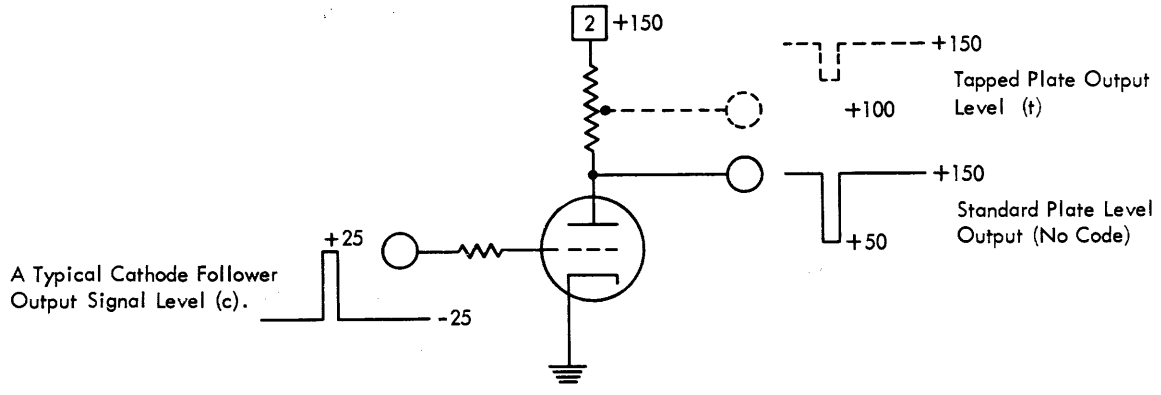

Figure 32. Level Setting

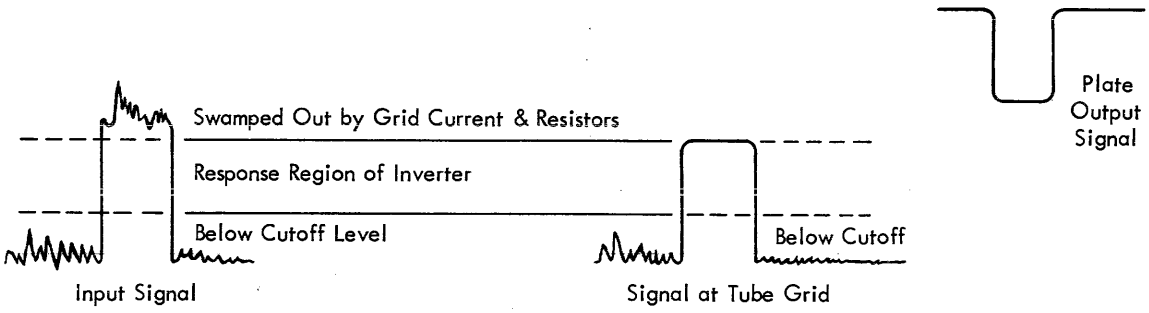

Figure 33. Clipping and Shaping

condition can be corrected by an inverter. Signals more negative than the amount needed to cut off electron flow within the tube are not reflected in the output of an inverter. At the other end, signals which try to drive the grid positive with respect to the cathode are effectively swamped by the grid current which results; the plate current levels off at a fixed point. This overdriving of the units is engineered into the 604 and clips off any roughness at the extremes of a signal. This happens almost every time a normal signal is run through a tube unit as shown in Figure 33. A similar effect results when a signal with a sloping leading or trailing edge overdrives an inverter, Figure 34. A high

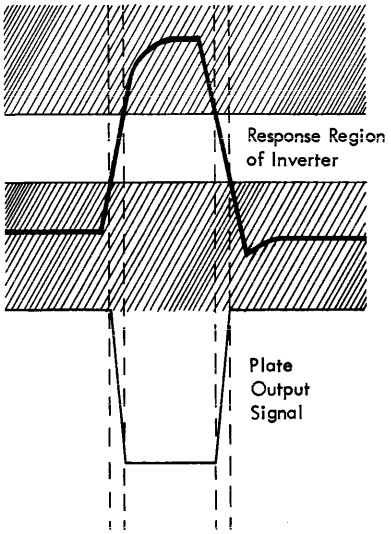

Figure 34. Signal Reshaping

degree of improvement results in the rise time and fall time since only a portion of the rise and fall time produces any actively changing plate signal level. This is a very important function of inverters since sloping wave fronts will not properly operate triggers (which are the sole memory devices used in the 604).

4. Delay (Figure 35). An inverter unit can be used to introduce a slight amount of delay in the transmission of a pulse from one circuit to another. This delay is generally quite short, less than a microsecond, but can help stabilize an occasional circuit. This delay is a function of the coupling to the inverter unit. The compensating capacitor is left out of the circuit, which puts a slope on the leading edge of the signal. The time it takes for the tube grid to rise from a point below cut off to the point where cathode to plate electron flow begins gives the desired delay. The amount of delay can be increased somewhat by adding a small shunt capacitor, Cd in Figure 35.

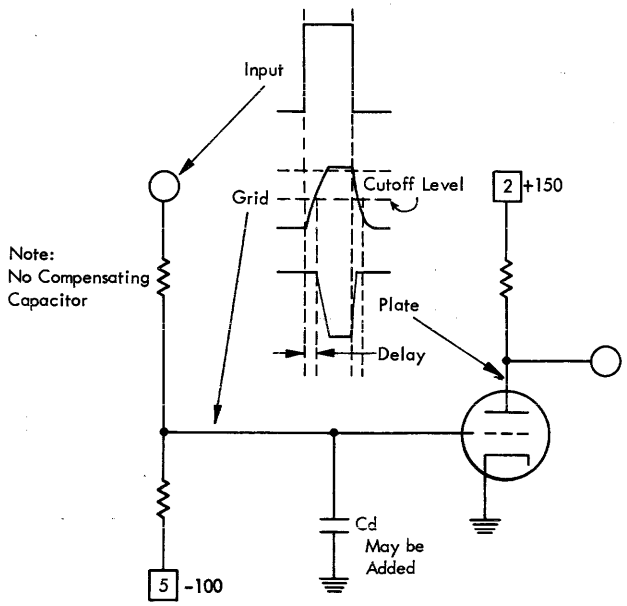

Figure 35. Signal Delay

5. Isolation. Isolation is a very important use of a tube unit. As previously mentioned, variations on the grid of a tube are reflected in the plate circuit because electrons flowing from the cathode to the plate must

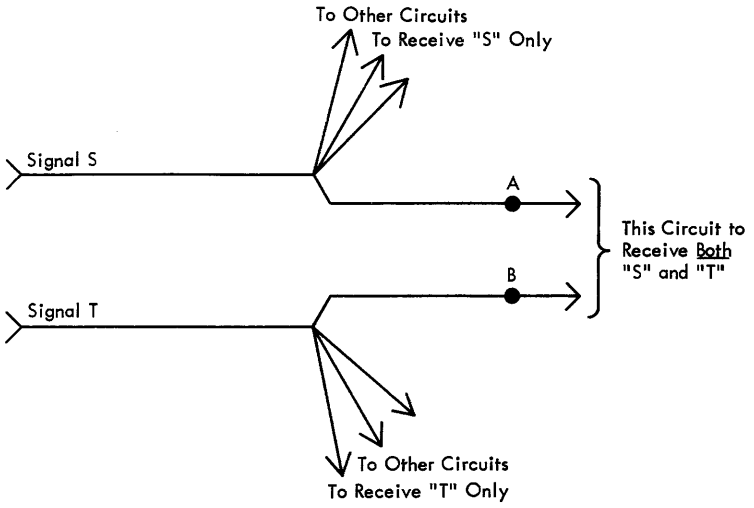

Figure 36. The OR Circuit Mixing Problem

pass through the grid. There is no electron flow from plate to grid, however. Therefore, except for a small capacitative effect between the plate and grid, the grid is electrically independent of the plate. Variations on the plate have practically no effect on the grid or circuits connected to it. Some 604 circuits, such as triggers, can be flipped by stray pulse pick-up (called cross talk or noise) even when applied to their output points. To prevent this effect, the output of a trigger, for instance, will be run through a physically close inverter before a lead of any great length (and therefore liable to stray pick-up) is run throughout the machine. A similar "back circuit" elimination is used in the "OR circuit mixing" to be described next.

6. *The Inverter OR Circuit (Mixing) (Figures 36 and 37).* The problem to be solved is represented by Figure 36. Two separate signals, "S" and "T", which do not necessarily occur coincidentally in time, are used to separately control different circuits within the machine. One circuit, however, is to receive and be controlled by BOTH these signals. Merely shorting together points A and B will provide the desired S and

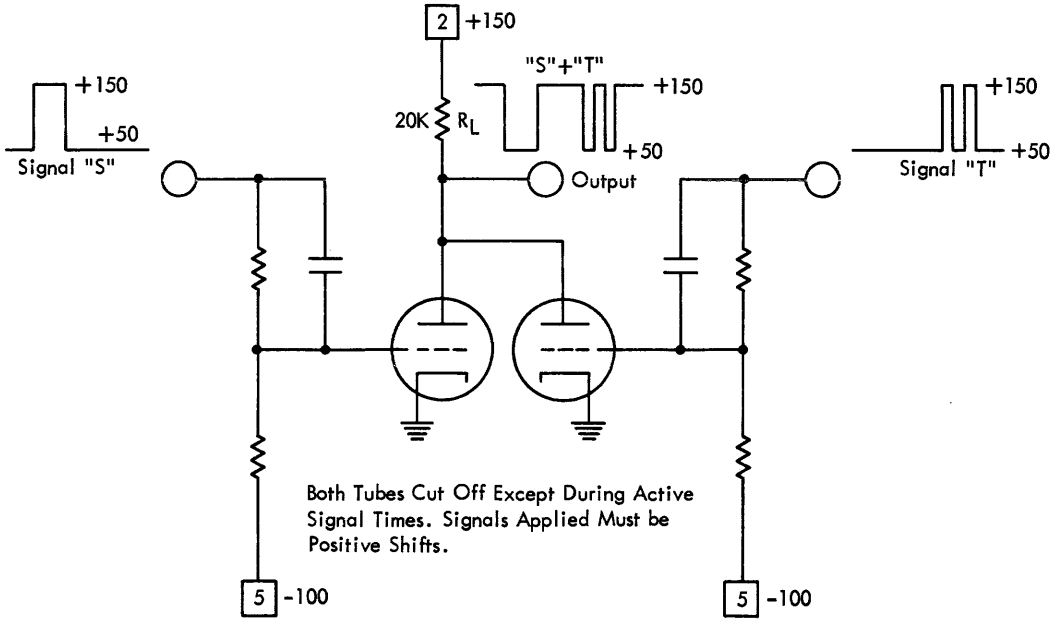

Figure 37. The Inverter OR Circuit (Mixer)

T signals to the desired circuit, *but all the separate S circuits will now also receive the T signal and vice versa.* A circuit is desired which will create an output whenever one signal OR another signal is applied to it without interaction between the input signals. Figure 37 shows one solution through the use of two inverter circuits with separate inputs *but sharing a common plate load resistor.* The values of the components and the circuits which feed this mixer (OR circuit) are chosen so both triodes are normally resting below cutoff. When signal S comes in to the left inverter, this inverter conducts and the inverted signal is developed across the plate load resistor, R_L. When signal T comes in to the right inverter, the right inverter conducts and develops the inverted signal across the same plate load resistor, R_L. Both input signals thus affect the output, but there is no effect upon signal S by signal T or vice versa, because signals on the plate of a tube are not reflected back to the grid.

Almost any number of tubes can be connected to share the same load resistor (so long as each of the tubes is normally cut off) thus making multiple mixing OR circuits possible. Such combinations are used in the 604.

An understanding of the problem solved by an OR circuit mixer is quite important. The solution of the problem is an important application of inverter (IN) units, but other units such as diode types (DS), cathode followers (CF), and pentagrid switches (PS) can solve this same problem. These units will be described later.

By definition, an OR circuit is a mixer which allows two (or more) separate inputs, not necessarily coincident in time, to be combined on a separate output without interaction between the inputs. "This" OR "that" will produce an effect.

7. *The Inverter AND Circuit (Switch) (Figures 38 and 39).* The control of electronic pulses (allowing a pulse to reach a circuit at one time but not at another) is one of the primary design elements in the 604. In electrical IBM machines, series strings of relay points perform this control function; all relay points in the string must be closed before the circuit is completed. In the 604, electronic switches allow similar control. The definition of a switch is *an electronic circuit which requires two coincident inputs to obtain an output.* The logical name "AND circuit" has been applied to such a device because "this" condition AND "that" condition must be true at the same time to secure an effect.

Figure 38 shows the basic electronic problem. It is desired to let only a particular negative pulse from signal "K" get to a circuit and produce an effect. The somewhat wider negative signal (a gate) shown as "L" has a time coincidence with the desired "K" pulse, but not with the undesirable pulses, and can thus be used to make this particular pulse selection possible. Figure 39 shows the Inverter Switch (AND circuit). As with the OR circuit mixer, other types of units which will be described later can also be used to accomplish the same objective.

The circuit of the Inverter Switch is identical to the Inverter Mixer. The only difference is that both sections of the Inverter Switch are driven by a normal no-signal +150 volt level and thus both triodes are conducting during no-signal time (with the Inverter Mixer, both triodes were normally cut off). We have discussed the

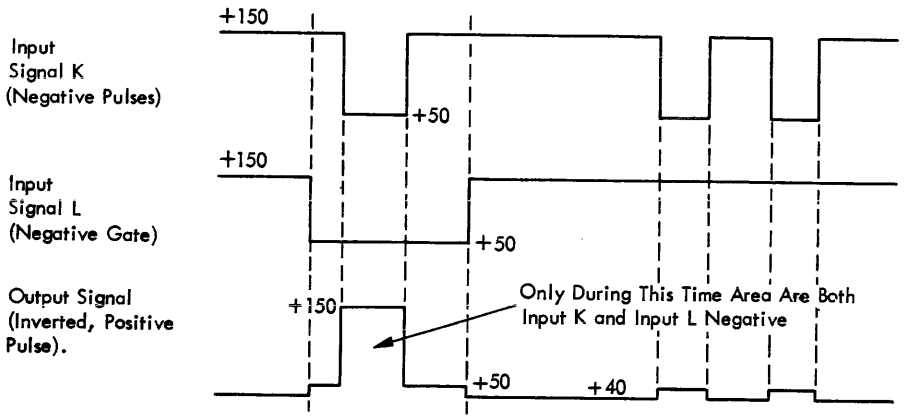

Figure 38. Control or Selection of a Pulse

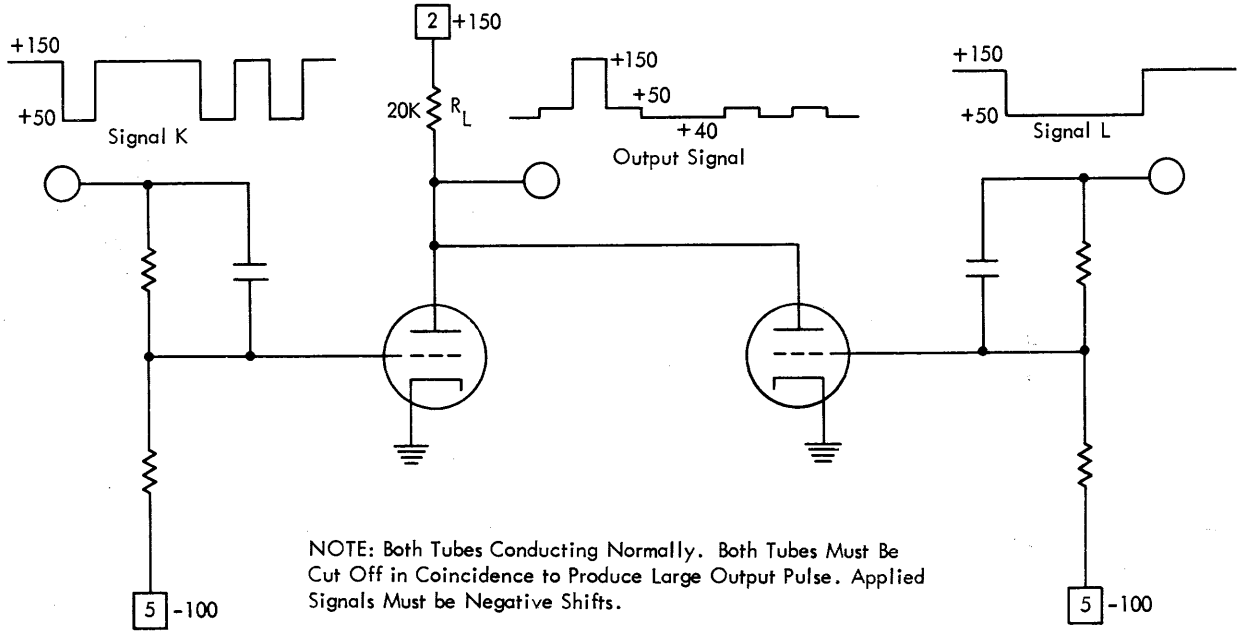

Figure 39. The Inverter AND Circuit (Switch)

fact that one inverter triode conducting through a normal 20k plate load will reduce the potential on the plate down to about +50 volts. When a second inverter triode is connected to share the same plate load and is conditioned to conduct, a current sharing action takes place. When the second triode is told to conduct while the first triode is also conducting, only a plus 50 volt potential is available on the second plate to attract electrons. Electrons leaving the second triode cathode are thus only mildly attracted to the plate, but a few do make the trip and further lower the potential on the tied together plates of both the tubes. This reduces somewhat the electron flow in the first tube. The net effect is that the combined plates fall to about 40 volts (a drop of only 10 additional volts), and the total electron flow through the tubes divides about equally. This is the heart of the Inverter Switch action: either tube conducting alone will drop the combined plates to +50 volts, while both tubes conducting together cause only an additional ten volts of drop. This is shown in Figure 38. Such a small (10 volt) change will have no effect on following 604 circuits. When both triodes in coincidence are cut off, the plate output potential rises to +150 volts. It thus takes two coincident negative going input signals to produce any appreciable voltage level change at the output.

Since the circuits of the Inverter Switch and the Inverter Mixer are identical, examination of the preceding circuits must be made to determine the true action. This will be found true of any circuits in which a load resistor is shared by two or more units. It should be noted that the Inverter Switch is more frequently used than the Inverter Mixer.

Power (PW) Units (G and H)

The inverter units previously discussed are designed to work with tubes capable of passing safely a current of about five milliamperes. The basic pulse amplitude of the 604 is 100 volts; and if 5 ma of current is to produce this much voltage drop, a 20k plate load resistor is required. In some instances twenty thousand ohms is more resistance than can be used for successful circuit operation. For instance, in Chapter One, Figure 5, a general layout of the machine was given. A number of entry channels were indicated as running throughout the machine. These channels feed many units in parallel, each loading the circuit to some degree. Further, the long leads of these channels have considerable capacitance between themselves and ground, and other circuits. To prevent severe distortion and delay of the voltage pulses, these conditions demand a low resistance plate load to drain the capacitive charge quickly at the end of the pulse, and a high current tube to charge the capacitance and drive the receiving unit grids sharply at the start of a pulse. A three thousand ohm plate load is indicated, but a 6J type tube could only produce a twenty to thirty volt shift across such a resistor. It is possible to connect 6J type tubes in parallel

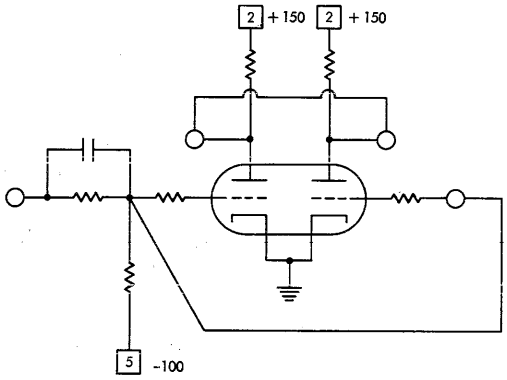

Figure 40. A Semi-Power Arrangement Using Two Triodes in Parallel

to increase the current capacity, but this would require an excessive number of units in some cases. It is done occasionally with the two sides of one IN unit where only a moderate power increase is needed. Figure 40 shows such an arrangement. This hook-up is called a semi-power unit usage of an IN unit. Notice that *both* grids and *both* plates are connected together. Other circuits, such as switches or mixers, connect EITHER the grids OR the plates together, but these configurations are *not* for semi-power reasons.

To achieve the power capabilities desired, using only one pluggable unit, a larger and different tube is used in Power Units (coded PW). One type of power unit, the PW-12, uses a 5965, which is a heavy duty dual triode. The two units are effectively in parallel as discussed above under the semi-power unit connection. The use of the larger tube type in this circuit permits a 60 volt signal (from +150 to +90 volts) to be developed across a plate load of less than one thousand ohms.

All other PW units in the 604 use a type 6AQ5 beam power tube. The five electronic elements which make up the construction of this tube form the cathode to plate electron flow into a heavy stream or beam. A typical diagram for this power unit, showing the symbol for the tube used, is given in Figure 41.

The larger physical size of the elements within the 6AQ5 tube and the addition of the screen grid between the control grid and the plate both make this tube capable of easily passing the 15 to 30 milliamperes required by certain 604 circuits.

The screen grid in the 6AQ5 overcomes one of the limitations of the triode. As a triode passes electrons to the plate, the plus potential of the plate is somewhat neutralized. The plate potential drops, and it is this drop which constitutes the signal output. However, the lower plate potential does not attract electrons from the cathode with as much force nor in as great a number as would have been true had the plate volage not dropped. In short, the plate potential *must* drop to produce a signal but it should *not* drop if maximum electron flow is to be obtained. These mutually incompatible requirements are resolved by the addition of the screen grid between the grid and the plate.

The screen grid is connected through a 470 ohm limiting resistor to +150 volts. With such a low value of series resistance, very little voltage variation is

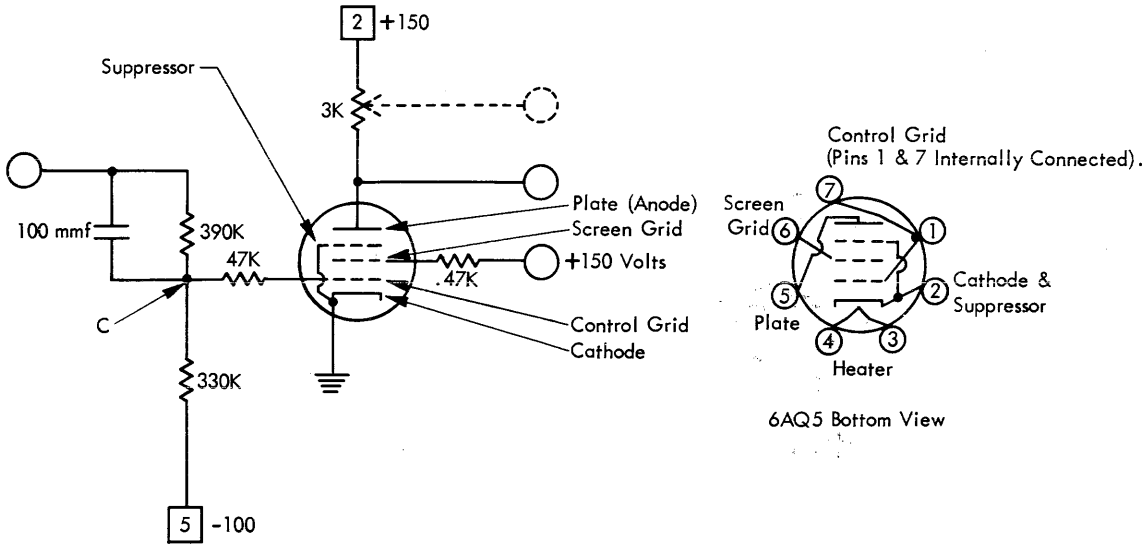

Figure 41. A Power Unit Using a 6AQ5

noticed at the screen regardless of the current drawn by it. Even 10 ma of screen current (which is excessive for a 6AQ5) would lower the screen voltage only 4.7 volts to about +145. The screen potential thus remains quite stable despite the amount of current flow through the tube. Since the screen is located physically nearer to the cathode than is the plate, the screen exercises a greater attractive force for electrons boiled off the cathode than does the plate. In fact, the potential on the plate is practically unfelt at the cathode, due to the screening action of the screen grid. When the control grid permits them to do so, the electrons from the cathode stream toward the attractiveness of the screen grid. The screen grid is made of turns of fine wire with wide spaces between the turns. By the time the electrons get near the screen grid wires, they are traveling so fast that they are unable to turn and actually land on the wires. Instead, most of them pass right by the screen and continue going until they strike the plate. These electrons trying to flow through the 3,000 ohm plate load resistor cause the plate potential to drop and thus develop the output signal, but the lowered plate potential does not reduce the number of electrons striking the plate. The net result is that an output signal level change from +150 to +40 volts is produced across a 3000 ohm plate resistor. This signal is too large for some applications, and as a result some power units use a plate resistor with an adjustable tap to permit any desired signal amplitude to be obtained. This tap *must* be adjusted any time a tube is replaced in such a unit to insure specified output (generally a fifty volt signal). Figure 41 shows this tapped output in dotted lines.

The suppressor grid shown between the screen grid and the plate of Figure 41 prevents electrons from returning to the screen grid from the plate under certain conditions of operation. With the power tube passing a heavy electron flow, the positive potential on the plate may only be thirty to forty volts due to the voltage drop through the plate load resistor. As the electrons are thrown at the plate by the action of the screen, a chipping effect takes place. Secondary electrons are knocked off the plate and could readily be attracted to the screen grid, since under these conditions the screen still has a plus potential of nearly 150 volts on it while the plate is only at 30 volts or so.Any electron flow from plate to screen would decrease the effective plate current and increase the screen current; both effects are undesirable. This is prevented by the suppressor which is electrically connected to the cathode within the tube and thus presents a repelling, negative barrier to any slow moving electrons released by the plate. The higher velocity electrons traveling from the cathode to the plate are only sightly affected. Having five active elements within its glass envelope, such a tube is called a pentode (*penta* indicating five). With some types of tube construction the suppressor grid is not physically included, the effect being obtained from a repelling

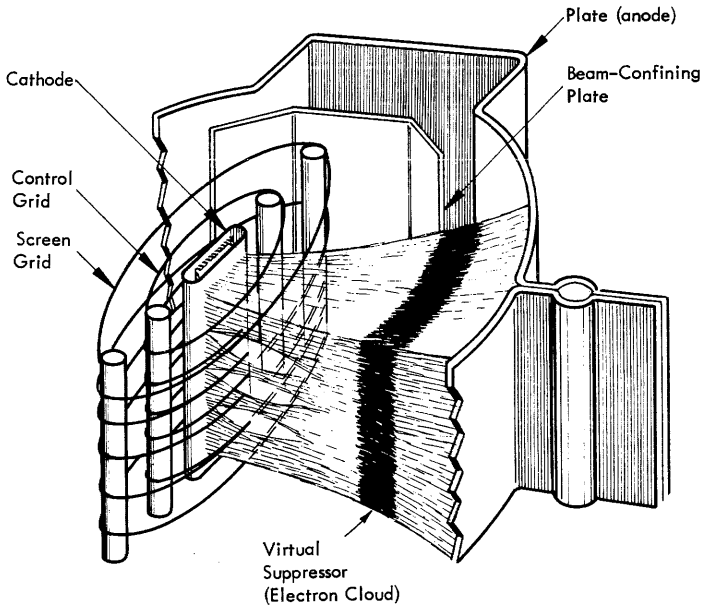

Figure 42. A Beam Power Pentode

cloud of electrons produced by the beaming of the electrons toward the plate. Figure 42. In this case the beam confining plates are the fifth tube element. They are generally represented by the tube symbol in the same way an actual suppressor grid would be drawn and as indicated by Figure 41.

The pentode tubes used by the 604 require a potential of nearly —20 volts on the control grid to cut off most of the electron flow. This is twice or more than required by the dual triode 6J type. The values of the resistors in the power unit grid circuit are different from those generally found in inverter units in order to produce a voltage swing from —32 to +14 at point C, Figure 41. As with the inverter unit, if the tube cathode is hot, the drawing of grid current will keep the plus level at something less than +1 volt.

In summary, type PW units are high power inverter units using pentode tubes or, in the PW 12, a heavy duty dual triode. The PW units are used when a number of tubes are to be driven in parallel or when a circuit wire must physically run for a considerable distance.

Cathode Follower (CF) Units (H suffix only)

The Cathode Follower is a type of circuit which is in certain ways even better than a Power Unit for driving many parallel circuits or long lead length circuits. It is extensively used in the H suffix machine but not at all in the G and earlier.

Throughout this discussion of the 604 electronic circuits, the term "voltage on the grid with respect to the cathode" has been frequently used. It is this difference of potential which controls the electron flow within a tube. The voltage on the plate with respect to the cathode also has an effect on the cathode to plate electron flow, but a relatively weaker on. In circuits discussed up to now the tubes had their cathodes connected directly to ground and any change in voltage on the grid was totally reflected as a change in grid to cathode potential. In the cathode follower this is not the case. Figure 43 shows that a resistor has been connected between the cathode and a point with a potential 100 volts below ground (that is, 100 volts minus). The plate of the tube is now connected directly to +150 volts. In effect, the plate load resistor of the inverter type unit has been shifted down through the tube to the cathode circuit. With this arrangement, any change in electron flow through the tube directly affects the potential on the cathode with respect to ground. It is this change in cathode potential which constitutes the output signal, just as the plate level change in inverters, power units, etc., makes up *their* output. An important result of this shifting cathode potential is that the grid to cathode potential is changed every time the cathode level shifts, and the cathode potential shifts every time the grid potential is changed. This interacting effect is the heart of cathode follower operations.

Unlike other unit types of the 604, cathode followers are designed so they never cut off, nor are they driven into the grid current region. Electron flow through the tube is always present. As the grid moves toward a more positive potential, the electron flow through the tube increases, more electrons are removed from the cathode, and the cathode becomes less negative (more positive). If the grid is shifted in a negative direction, the electron flow through the tube is reduced; this reduces the electron flow through the load resistor, R_L, and as a result the cathode moves nearer to —100 volts. That is, the cathode also shifts in a negative direction. This means there is no inversion of the signal through

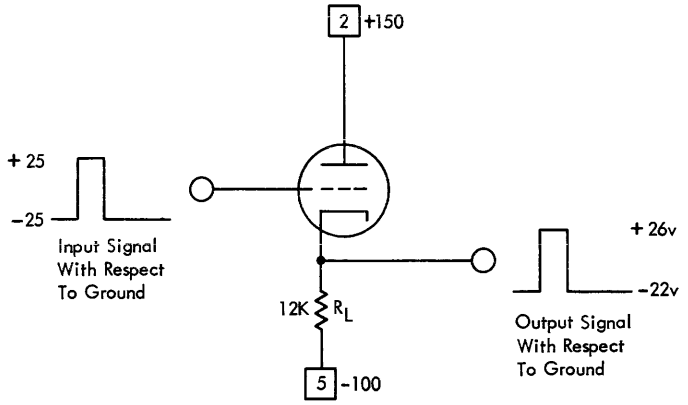

Figure 43. A Basic Cathode Follower Showing the Characteristic Absence of Signal Inversion

a cathode follower. At times this is an advantage, at other times not, but it is an invariable fact in any event.

A type 5965 tube is generally used in 604 cathode follower units. This tube will cut off when the voltage on the grid *with respect to the cathode* is more than five volts negative, and it will draw grid current whenever the grid goes positive *with respect to the cathode.* The normal signal applied to the grid itself of a 604 cathode follower is from —25 volts to +25 volts with respect to ground, and yet the statement was made, and is true, that the cathode follower tube is never driven either to cut off nor into the region of grid current flow. The answer to this seeming contradiction lies in the fact that the cathode *follows* the grid, always staying slightly more positive than the grid, and always staying within zero to five volts of the grid potential. This of course means the signal output voltage from the cathode can never be greater than the signal applied to the grid. There is actually a slight signal voltage loss through a cathode follower, but there is a power (current) gain which makes the circuit useful.

The reason for the cathode's staying within a few volts of the grid can be seen by considering the circuit of Figure 43. If the —25 volt signal on the grid of the tube did manage to cut off cathode to plate electron flow, there would be no electron flow through the load resistor, R_L, and the potential on the cathode would then drop to —100 volts (75 volts more negative than the grid). Put another way, the *grid* would be 75 volts more *positive* than the cathode. This would demand a heavy electron flow through the tube and would cause the cathode to move in a plus direction. But if the cathode goes more than five volts positive *with respect to the grid*, the tube electron flow will be cut off (since this is the same to the tube as having its grid five volts negative with respect to its cathode). If the electron flow is stopped, we are back to the starting point of our discussion. Neither of these extremes happens, of course. Instead, for any given input signal the cathode instantly shifts to a balance point that will make the grid to cathode voltage remain within the operating range of the tube.

In the cathode follower circuit a change in the cathode potential has as much effect on the electron flow through the tube as a change in grid potential. This introduces the second important point about a cathode follower, the "stiffness" of its output signal. A cathode follower has a low output impedance, which simply means that any stray signal which may happen to be picked up by a circuit connected to the cathode output is effectively swamped or balanced out. This fact made it possible in the 604H suffix to eliminate the shielded cables found in earlier machine to prevent trouble from stray pick-up (cross talk) on the long entry and exit channels that run throughout the machine. Plain wires and cathode followers are used in the H suffix where power units, inverters, and braid shielded cables were formerly needed.

The reason for the output circuit "stiffness" of a cathode follower can be seen by imagining a stray picked up signal that tries to drive the cathode negative. This has the same effect within the tube as making the grid more positive. This increases electron flow through the tube and tries to make the cathode go in a positive direction, instantaneously neutralizing to a very large degree the effect of the initial stray, negative signal applied to the cathode. A stray positive signal produces a similar effect in reverse. We have, in a manner of speaking, provided electronic shielding to the output circuits.

In summary, a cathode follower:

1. Does not invert the input signal.
2. Gives out slightly less signal voltage than is applied to the grid.
3. Gives a gain in signal power through heavier electron flow.
4. Has a stiff (low impedance) output.

CATHODE FOLLOWER SWITCHES AND MIXERS (FIGURE 44)

As was true with two inverters sharing a common load resistor, two cathode followers sharing a common load resistor can be used either to combine signals (the OR circuit mixer) or to control pulses (the AND circuit switch). Figure 44 shows the basic circuit for both these logical functions. As was true with the inverter circuits, the polarity of the input signals makes the difference. It is as a switch (AND circuit) that the 604 generally uses this arrangement.

Whichever tube has the more positive signal input to its grid controls the output at the cathodes. If the no signal point of both grids is —25 volts, with respect to ground, the combined cathode output will be near —22 volts. If input A is shifted to +25 volts, the left cathode will rise to about +26 volts and draw the right cathode up with it. With the right cathode at this +26 volt level and the right grid still at —25 volts with respect to ground, the right tube is completely cut off

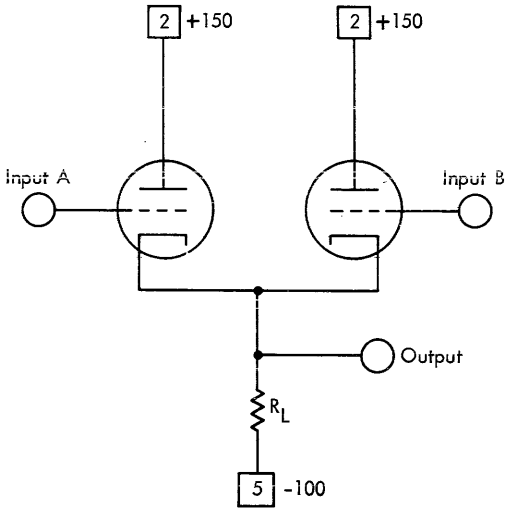

Input A	Input B	Output	
−25	−25	−22	(Mixer No Signal Condition)
+25	−25	+26	
−25	+25	+26	
+25	+25	+26	(Switch No Signal Condition)

Figure 44. The Cathode Follower Switch Circuit

and no longer acting as a cathode follower. The left tube is thus controlling the output since it has the more positive grid. Returning input A to −25 volts and raising input B to +25 volts produces the same type of action. A plus input on either grid will thus produce an output. There is no interaction between input circuits, and thus the conditions required for an OR circuit mixer have been met.

When used as an AND circuit switch, a resting no-signal condition of +25 volts is on both grids. As long as either grid is positive, there will be no output variation. Only when both grids go minus at the same time

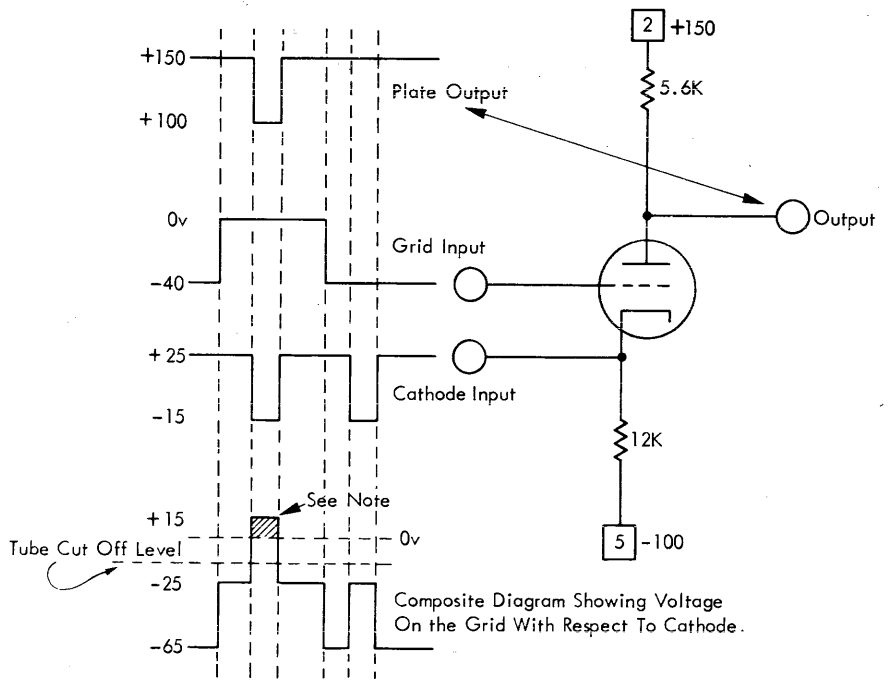

Note: Portion shown shaded (where grid goes plus with respect to cathode) will, if cathode is hot, be swamped due to grid current flow.

Figure 45. The Basic Triode Switch Unit

will the cathode level drop and produce an output signal. This meets the requirements of a switch, a device which requires two coincident inputs to secure an output signal. In this case both the input signals and the resultant output are negative shifts. These actions are summarized in the chart of Figure 44.

The Triode Switch (H suffix only)

The Triode Switch uses an inverter, IN type unit, but involves some of the principles discussed under the cathode follower. A triode switch has a resistor in both the cathode lead and the plate lead. Input signals are applied to the grid and across the cathode resistor, with the output taken from the plate of the tube, as shown in Figure 45.

Once again it must be emphasized that it is the voltage on the grid *with respect to the cathode* that controls the electron flow through a tube. The grid of a triode switch is driven over a range of —40 to 0 volts with respect to ground. The cathode is driven from +25 to —15 volts, again with respect to ground. Translating these values into the important grid to cathode relationship shows that the grid varies from —65 to +15 volts *with respect to the cathode.* This is shown by the bottom graph on Figure 45. Any time the grid is more than five to ten volts negative with respect to the cathode, the tube current is cut off. As a result, only when the grid is at the zero volt level with respect to ground AND the cathode is at the —15 volt level with respect to ground, can cathode to plate electron flow take place. Only at this time is the tube not cut off. We thus have the requirement of a switch: it takes two coincident inputs to secure an output shift. With the triode switch, one plus shifting signal is used on the grid and one negative shifting signal on the cathode to secure a 50 volt negative shift in plate output during coincident time.

Both inputs to a triode switch generally come from cathode followers. The grid signal level (from —40 to 0) is voltage-wise obtained most easily from a cathode follower, and the cathode signal input (+25 to —15) must be from a stiff, low impedance source ideally supplied by a cathode follower. The particular voltage levels needed are secured from the proper selection of resistor values in the cathode follower driver circuits. A typical diagram is shown in Figure 46.

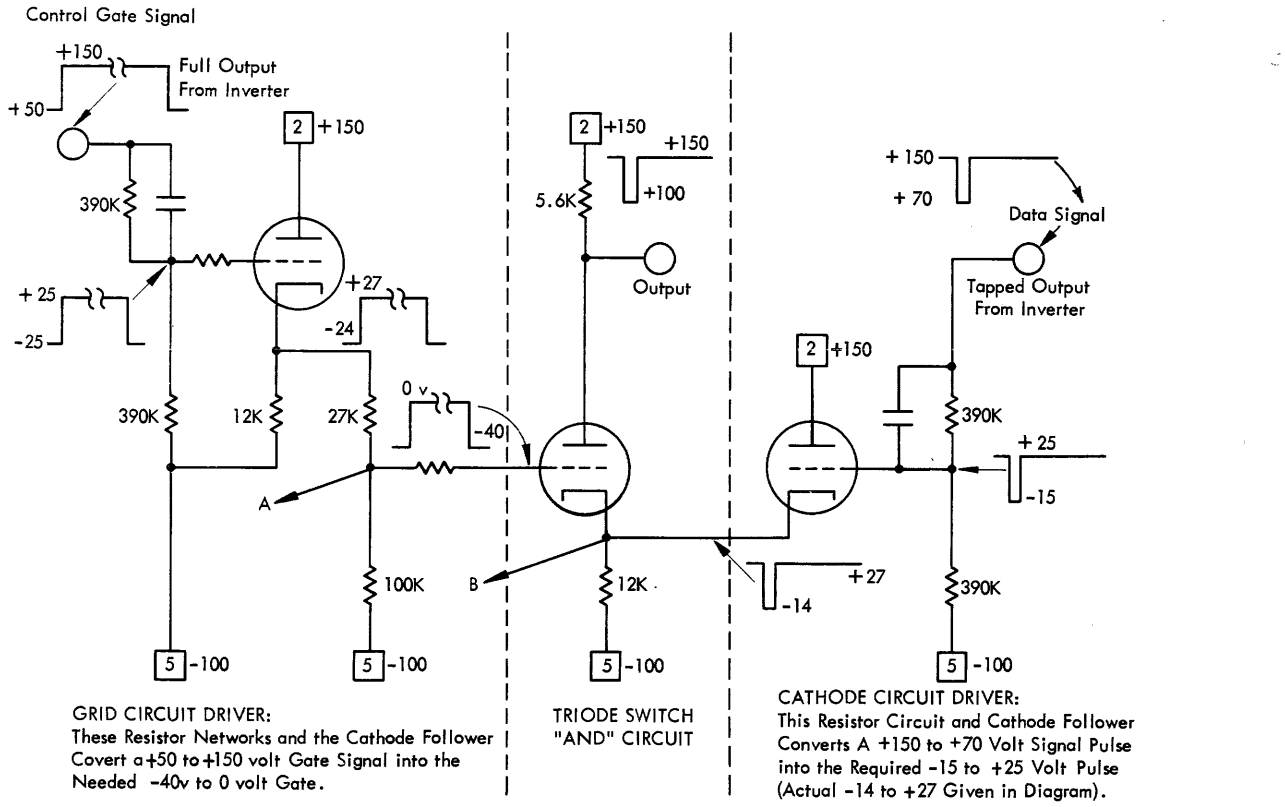

Figure 46. The Practical Triode Switch and Driver Circuits as Used in the 604H Column Shift Unit

The illustration shows the actual components used in the 604H Column Shift unit which makes the major use of Triode Switches. The Control Gate Input at the upper left of the diagram has its level changed by the resistor net feeding the grid of the cathode follower driver. A resistance network in the cathode circuit converts the Control Gate into the necessary voltage levels for application to the grid of the triode switch.

The Data or Information Signal entering at the upper right of the diagram also has its voltage level changed by a resistance circuit before being applied to the grid of the cathode follower driver. This tube drives the cathode circuit of the triode switch and provides the needed second input at the proper amplitude and level.

The Column Shift Unit of the 604H uses sixty-three triode switches, but this does not mean that individual driver tubes are needed for each switch tube. Figure 46 shows two leads, A and B, which each control five or more separate triode switch tubes. The total number of tubes is thus less than might at first glance be expected, and since two triode switches are available in one pluggable unit, the space required by the 604H Column Shift circuits is comparatively small.

The Pentagrid Switch (PS) Unit (G and H)

The Pentagrid Switch unit uses a special, multi-element tube in a circuit specifically designed for switching applications. In machines prior to the H suffix, 63 of them were used in the column shift unit alone, as well as for numerous applications in other areas. H suffix machines use fewer of these units, but their application is still extensive.

Figure 47 shows the basic elements of a Pentagrid Switch unit. An electron leaving the cathode must pass through two grids, one after the other, before reaching the plate. Either one of these grids, if sufficiently negative, can repel the electrons and cut off the cathode to plate electron flow. Both grids must be at their high, or plus level at the same time to permit electrons to reach the plate and produce a negative output signal shift. It thus takes two coincident conditions to produce an output shift, meeting the requirements of a switch unit. As is true of tube circuits using grid input and plate output, the signal is inverted in passing through the unit.

Pentagrid switch units use the IBM type class 6B tube; the commercial 6BE6 was the basis for its design. Special industrial tubes, such as the 1680 or 5915A, are actually used in the 604. Different type numbers are used from time to time as engineering designs or finds improved performance possibilities. A −6 volt potential on either control grid with respect to the cathode will cut off electron flow to the plate.

Figure 48 shows an actual PS unit circuit and represents the 6B tube as it really is. There are not just two, but five grids within the tube (thus the name, *pentagrid*), numbered from one to five as they are located in the electron stream from cathode to plate. Grids 1 and 3 are the control grids. Grids 2 and 4, called screen grids, are internally tied together and connected through an external 470 ohm resistor to +75 volts. These two grids accelerate the electrons on their trip from cathode to plate (which of necessity is somewhat longer than that found in triode tubes). They also act as shield screens to reduce interaction and cross talk between the control grids and to make the cathode to plate electron flow relatively independent of plate potential. Grid number five is called the suppressor and is internally connected to the cathode. Its function is to repel back to the plate any slow-moving secondary electrons which are chipped off the plate by the high velocity cathode to plate elec-

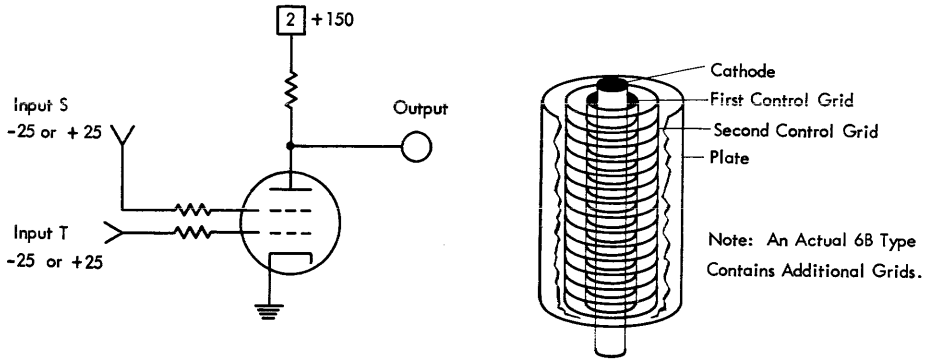

Figure 47. The Basic Circuit of the Pentagrid Switch Unit and a Cutaway View of a Simplified Tube for Use in the Circuit

trons, as was discussed under "Power Units." The large number of grids and the resultant close spacing between the elements makes this tube more liable than other types to develop internal shorts. For instance, the spacing between the cathode and the number one control grid is about .015 inch. A small flake of oxide material from the cathode can cause intermittent or permanent shorts between the cathode and this grid. Where a number of these tubes are connected in parallel (as in the G suffix column shift) such shorts can appear to be trouble in units other than the one actually at fault; knowing this can help trouble analysis.

In practice, the signals applied to the input points of the unit shown in Figure 48 vary from a down level of +40 volts to an up level of +140 volts. The resistors in the grid circuits will convert these levels to about —25 to +25 volts at the grids themselves. The drawing of grid current will generally prevent the up level from going much above +1 volt *at the grids*. However, if grid number 1 has cut off electron flow through the tube, there will be no electrons around for grid number three to draw. Under these conditions grid three *can* go to +25 volts if its input signal is at the high level. If the cut off voltage on the number one grid should now be shifted and permit electrons to flow, the number three grid would have electrons to draw and would drop to the one volt point. The effect of this 24 volt change in grid number three potential can be noticed on some scope pictures, especially where slave units are involved. While this effect is considered in machine design, the high values of the resistors used in the grid circuit prevent most of this shift from being reflected back to the input point and driving tube.

VARIATIONS IN PENTAGRID SWITCH UNIT CIRCUITS

There are thirty different types of PS units used in the 604 series of machines. The basic variations to be found in the plate circuit or in the grid circuits of PS units are the same as those discussed under Inverter Units:

1. The compensating capacitor to prevent signal distortion.

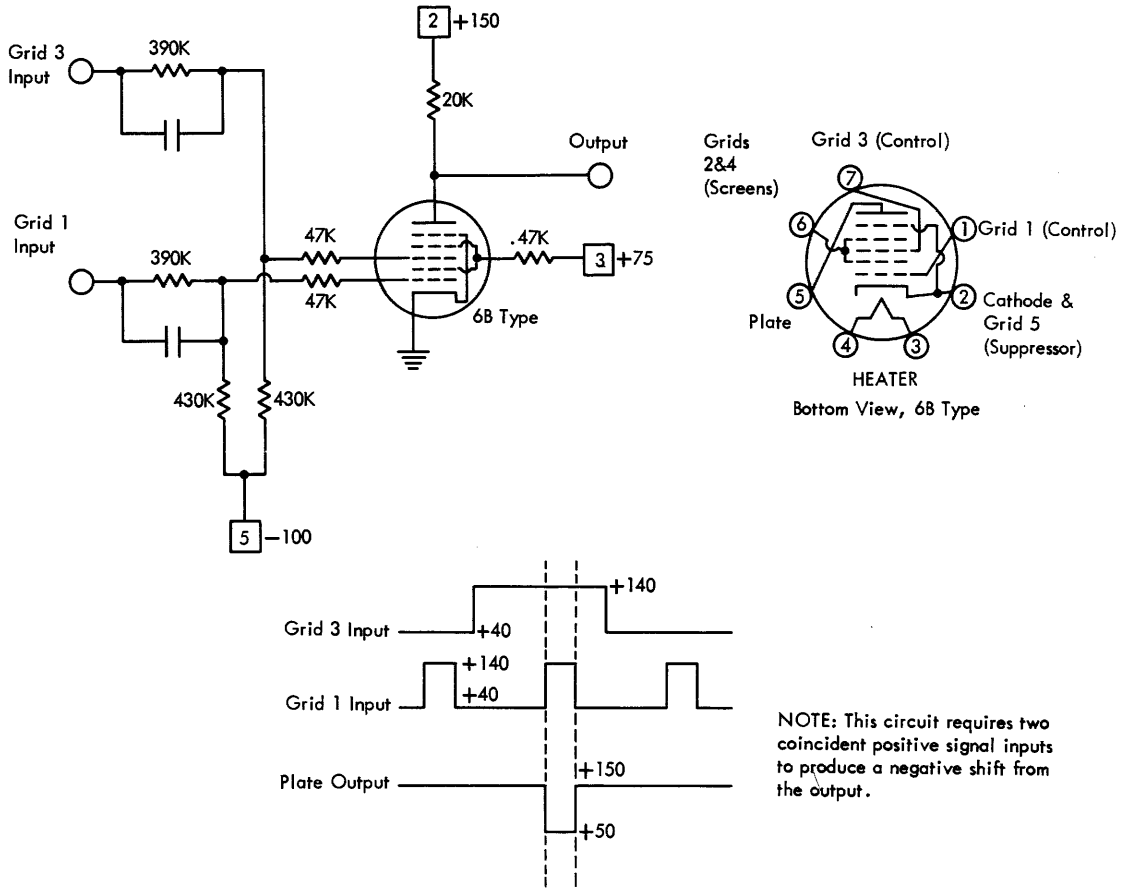

Figure 48. A Practical Pentagrid Switch Circuit Showing All Five Grids and the Base Connections for IBM 6B Class of Tubes

2. The grid to ground shunt capacitor to desensitize that input and swamp out noise.

3. The coupling capacitor to separate the AC component from the DC and to convert long duration gates into short peaked pulses.

4. The tapped output to reduce the amount of output signal shift taken from the plate circuit.

5. The slave unit to work in conjunction with other units to save components.

There is one unique variation for the PS unit; connecting the two control grids together produces a unit having the ability to amplify rather greatly any variations in input level. Very small changes on the grid (s) produce large changes in the output level. This principle will be found used in the regulating portion of the reset circuits to be described later.

In several instances in the 604, the PS unit will be found used as an OR circuit mixer. In these cases the normal resting point of the input signals will be at the up level (+150 volts). The tube will normally be in conduction. Dropping the signal level to one grid OR the other will shut off cathode to plate electron flow and produce a positive output shift from the plate. Such usage is rare, but will be found (in the Column Shift Control circuits, for instance).

The Diode Switch (DS) Unit (H suffix only)

The simplest and smallest per circuit AND/OR device used in the 604 is the DS unit using two 6AL5 dual diode tubes mounted in one pluggable unit. Figure 49 shows the small physical size of these tubes and the small number of components needed. There are four tube sections within such a pluggable unit. To permit specific identification, this makes necessary the addition to the panel location code of the letter "T" for top tube and "B" for bottom tube. When used with the already discussed subscript 1 for the left tube section and 2 for the right, this will provide the needed exactness. 3-8E_{B_1} would indicate a diode section in panel 3, row 8, column E, bottom tube, left half.

A diode will permit electrons to flow only from its cathode to its plate. This electron flow will only take place within the diode if the plate is more positive than the cathode. The Diode Switch (which can also be used as a mixer) makes use of this fact. When the diode is

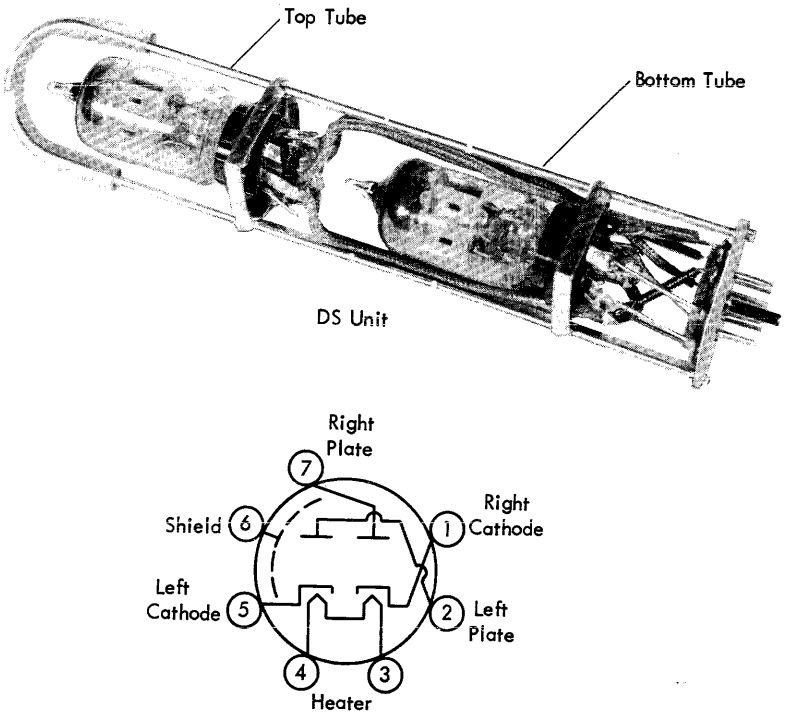

Bottom View, Type 6AL5

Figure 49. A Diode Switch Pluggable Unit and the Base Diagram for Type 6AL5 Tubes

passing electrons to the more positive plate, the tube acts much like a short circuit (the actual conducting resistance of a 6AL5 is in the range of 200 to 1,000 ohms, depending on voltage conditions). The tube acts like and is an open circuit when the plate is more negative than the cathode.

A cathode follower signal shift from —25 to +25 volts is generally used to drive a DS unit, though inverters, pentagrid switches, or power units can also provide the needed drive. There is no amplification of any kind in a diode, and as a result it will load (draw electrons) from any circuit feeding it. Because of the sensitivity of trigger units to loading, they are not generally connected directly to Diode Switches. The operation of triggers will be covered later.

The input signals to a DS unit can be applied either to the cathodes or the plates; these options will be discussed separately.

CATHODE INPUT

With the circuit of Figure 50, the two plates share a common 68k load resistor which runs to the +150 volt supply. Input signals are applied to the separate cathodes. Whenever a cathode is more negative than its plate, that diode will act as a very low resistance and draw the plate down to within a volt or so of the cathode level. The plate of the second diode (sharing the same load resistor) will also be pulled to the same lowered level. If this makes the second plate more negative than its associated cathode, electron flow through the second diode will be stopped. Whichever cathode is most negative will therefore control the output level and stop electron flow in the other diode (or diodes if more than two are sharing the same load resistor). If the cathodes of the diodes have the exact same potential, there will be a sharing of electron flow and the plates will approach closely the cathode level. The chart in Figure 50 shows all the conditions possible when cathode level signals are used to feed such a circuit. While OR circuit usage is possible, within the 604 this circuit is used exclusively as an AND switch. The resting point for both cathodes is at —25 volts; both input signals must shift to the +25 volt level to permit the output point to rise (two coincident inputs to get an output signal).

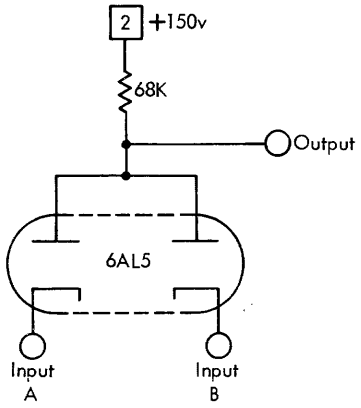

If Input A is:	And Input B is:	The Output Level Will Be About:
+ 25 v	+ 25 v	+ 25.5v (Both Tubes Share)
— 25 v	+ 25 v	— 24v (Left Tube Conducts)
+ 25v	— 25v	— 24v (Right Tube Conducts)
— 25 v	— 25 v	— 24.5v (Both Tubes Share) ← AND Circuit Starting Conditions

NOTE: The output level will be about equal to the voltage at the most negative (or least positive) cathode. This circuit is used in the 604H as an AND circuit switch.

Figure 50. A Diode Switch with Cathode Input

PLATE INPUT

With the plate input arrangement, the cathodes are connected to share a common, 51k load resistor which returns to the —100 volt supply. This introduces a form of cathode follower action. The cathodes will try to rise to the most positive plate. If one of the plates is more positive than the other, this plate will draw both cathodes up to within about a volt of itself. The second cathode will thus be more positive than its associated plate and the electron flow through this second section will cease. If both plates are at the same potential, each tube will pass a share of the total electrons. This arrangement is used in the 604 as an OR circuit mixer by placing the diode plates at a no-signal level of —25 volts. The cathode output will rest at a slightly more negative potential (near —25.5 volts). If one of the plates should be raised to +25 volts, the cathode line will be pulled up also. One input OR another input will thus produce an output. Since electron flow through the non-active diode(s) ceases, there is no interaction be tween inputs. One application in the 604 H True-Compliment Trigger Control circuit has five plate input diodes sharing a common load resistor, making it a five channel mixer. The chart of Figure 51 shows the possible voltage output conditions when cathode level inputs are applied to the plates.

Germanium Crystal Diodes and Selenium Rectifiers (G and H)

Germanium crystal diodes and selenium rectifiers act much like the tube diodes in that they permit electrons to flow readily in one direction but not in the other. These semi-conductors have a very low forward resistance, but unlike vacuum tube diodes they do leak electrons in the back direction. This limits their use in certain applications. Crystal diodes are very small, have very little stray shunt capacitance, and require no cathode heating. They can readily be used in switching circuits, but the greater cost and the ease with which they can be destroyed by even momentary overload has limited their use in the 604 to a few applications where space is a factor.

The construction of a typical germanium diode and the diagram symbol for it is shown in Figure 52. Electrons flow readily from the germanium block to the metal "cat's whisker", but with great difficulty in

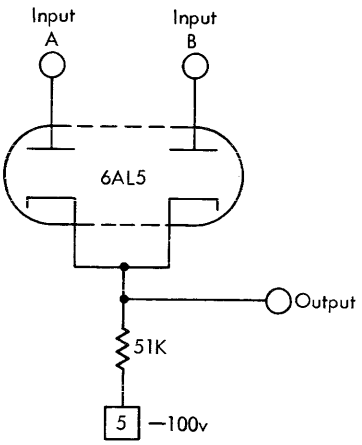

If Input A is:	If Input B is:	The Output Level Will Be About:
—25 v	—25 v	—25.5 v (Both Tubes Share)
—25 v	+25 v	+24 v (Right Tube Conducts)
+25 v	—25 v	+24 v (Left Tube Conducts)
+25 v	+25 v	+24.5 v (Both Tubes Share)

← OR Circuit Starting Conditions

NOTE: The most positive plate will set the output level. This circuit is used in the 604H as an OR circuit mixer.

Figure 51. A Diode Unit with Plate Input

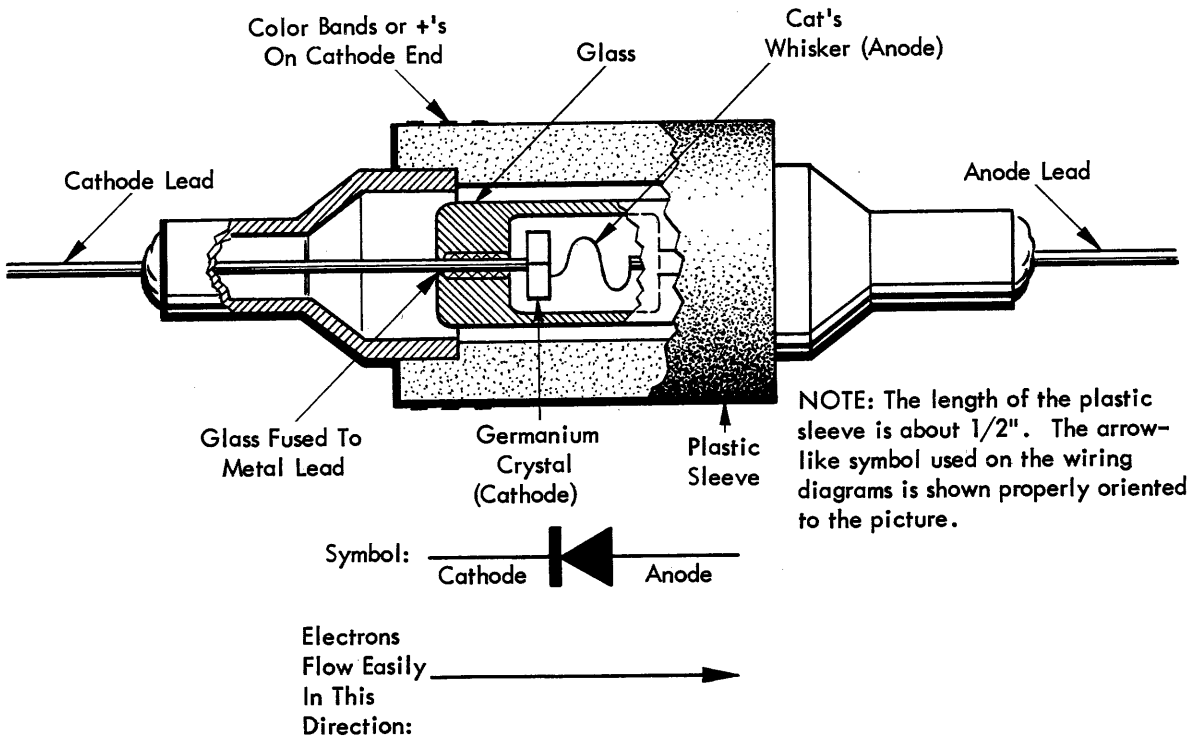

Figure 52. An Enlarged Diagram of a Germanium Diode Showing Construction

the reverse direction. The germanium thus acts like the cathode and the "cat's whisker" like the plate or anode. Since the internal construction of a germanium diode is most often not visible, an identifying band of color (or a plus symbol) will be printed on the *cathode end* of the case. Some diodes will instead have the diode symbol imprinted on the case. Note particularly that (except for leakage) electron flow through the diode is *opposite* to the direction of the arrow symbol. This can possibly be remembered more easily by visualizing the arrow symbol to be as drawn in Figure 53.

Typical germanium diodes will have forward resistances of from 50 to 500 ohms and back resistances of from 100,000 to 1,000,000 ohms. These values vary with the diode, the current, the temperature and the applied voltage. Forward current ratings of small diodes range near 25 to 50 milliamperes, and the maximum voltage across the diode in the reverse direction must be limited to 50 volts or less (100 volts with some types). Diodes are easily ruined by excessive heat. For this reason field replacement within units (where soldering is required) is not advised. Replace the complete unit.

Figure 53. Derivation of the Symbol for Solid State Diodes

Selenium rectifiers have the same symbol and general action as crystal diodes. They are physically larger (being made up of stacks of steel plates coated with alloys and selenium), have higher internal shunt capacitance, and have a higher resistance to the passage of electrons in the forward direction. They are used in the 604-521 as power rectifiers, arc suppressors, and polarity traps, due to their availability in higher current and reverse voltage breakdown ratings. They are less susceptible to burnout from momentary current overload, which makes them useful in circuits with high transient conditions. Some of the smaller selenium rectifier diodes, such as are used in the wiring of the 604 electronic tube gate panels, are encased in small cardboard tubes. The cathode end is identified the same as germanium diodes.

Thyratron (TH) Units (G and H)

Filling the glass envelope of an electron tube with a gas such as argon increases the current carrying capa-

bilities of the tube from two to ten times. Such a tube is called a thyratron and is an excellent high current, low voltage control device. It also has certain other characteristics which make it very useful whenever a relay or a punch magnet coil must be energized under electronic control, as when punching out calculated answers. The industrial type 2D21 tube is used in all thyratron units of the 604. This tube, about the physical size of the 6AQ5, is capable of passing the 80 milliamperes required by the usual relay coil and up to the 400 milliamperes required for brief periods when energizing a punch magnet coil. Figure 54 shows a typical circuit and the basing diagram for the 2D21. Notice the dot within the tube diagram which indicates a gas filled envelope.

As with a vacuum tube, electron flow through a thyratron tube can be held cut off by a negative potential on the grid. Minus 5 volts is enough to hold a 2D21 non-conducting with 65 volts applied to the plate. If the grid is driven to zero volts for several microseconds, the electrons streaming toward the plate will strike and break down into ions the gas molecules inside the tube. This ionized gas blooms throughout the cathode to plate area and conducts heavy current. Some of these ions (which have a positive charge) are attracted to the grid and neutralize any further electrons which may flow to it from the external circuits. Because of this, it is impossible to cut off a once fired thyratron by reapplying a negative potential to the grid; the ionized gas in the tube simply will not allow the grid to become negative. A resistor in series with a thyratron grid is mandatory to limit grid current and prevent tube damage under these conditions. The only way to stop current flow in a thyratron, once it is started, is to disconnect the plate potential long enough (fifty microseconds or more) to allow all the gas molecules to recombine and deionize. The grid can then go negative and assume control again. This action provides an excellent way to convert a short electronic pulse into a time duration long enough to cause a mechanical action.

Because of the gas in the tube, the voltage drop from cathode to plate within a conducting thyratron will not exceed 10 to 15 volts regardless of how much current is passed through the tube. The circuits using thyratrons must be designed to limit the current to a safe value for the conducting time involved. This small voltage drop through the tube permits the use of lower voltage power supplies within the punch. These are safer and less expensive.

The circuit shown in Figure 54 is typical of the different TH unit types used in the 604. The magnet coil to be energized is placed in the *cathode* circuit simply to permit a common connection among the negative sides of all coils in the 521, as has been common practice in IBM high speed punches. The circuit breaker in the plate supply lead allows mechanical control of the tube shut-off after sufficient energization time for the coil has been allowed. The 25 micromicrofarad capacitor between the tube grid and cathode is to bypass undesired transients that might be picked up and which

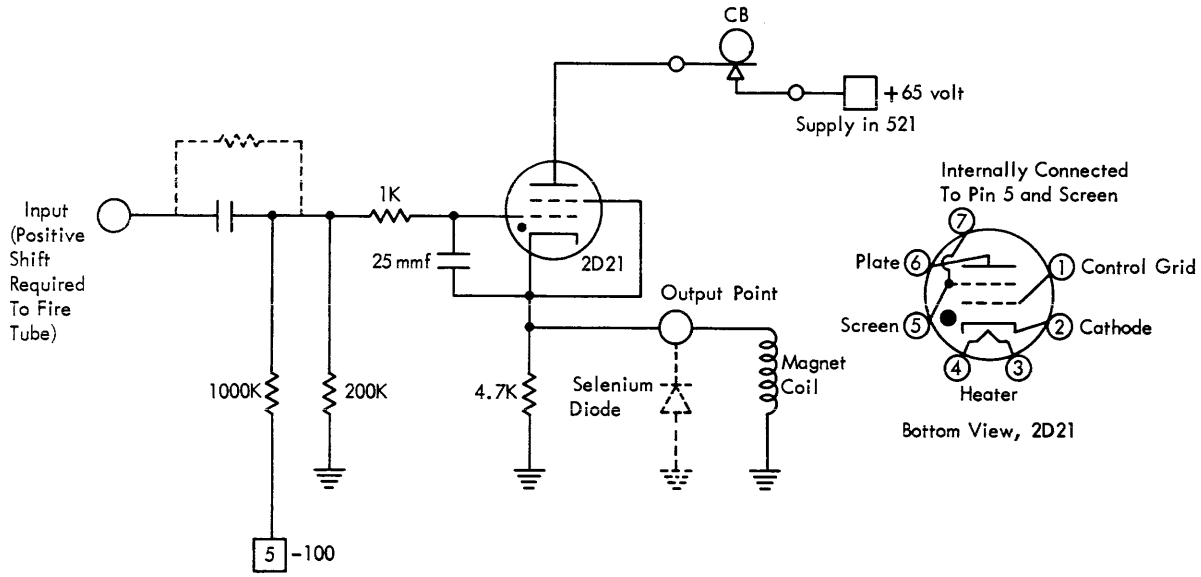

Figure 54. A Typical Thyratron Unit Circuit and the Base Diagram for the Type 2D21 Tube

could cause unwanted firing of the tube. The 4.7k resistor in the cathode acts as a load resistor to keep the cathode near ground potential should a magnet coil not be wired to the tube (which is possible with control panel wiring involving storage and counter read outs to punch magnets, all of which do not have to be wired). The 1k resistor in the grid lead limits grid current to a safe value. The 1000k and 200k resistors in the grid circuit provide a minus 17 volt bias potential to keep the 2D21 from firing until a plus shift signal is applied to the input.

Some TH units use a straight capacitive input while others use a resistance connected input with compensating capacitor. This is indicated in Figure 54 by the dotted resistor around the input capacitor. There is a basic and important difference in the circuit action with these two input variations. Imagine a positive potential applied to the input point of a unit with CAPACITOR input. At the instant this positive potential is applied, a positive pulse will be applied to the grid of the tube. A capacitor will couple only a *change* in potential, not a steady state condition. If the circuit breaker in the plate circuit of the thyratron is closed *before the time the voltage shift is applied to the input,* the thyratron will fire and then keep the coil energized until the circuit breaker opens. Further closings of the plate circuit breaker will NOT refire the thyratron unless another positive *shift* is applied to the grid input while the circuit breaker is closed.

With the RESISTANCE COUPLING input, a positive level applied to the input will hold the grid at the firing point for as long as the signal is present. When the plate circuit breaker is closed, the thyratron will fire and energize the coil for as long as the circuit breaker remains closed. When the circuit breaker opens, conduction will stop; but, unlike the capacitor input type unit, the tube will refire each time the circuit breaker closes as long as the positive input level remains. It takes both the closed plate circuit breaker and the positive grid input at the same time to start conduction (though with the resistance coupled unit either condition may occur first). Conduction is terminated only by opening the plate circuit breaker.

It is possible to fire a thyratron (when the plate circuit breaker is closed) by applying a sharp negative potential to the cathode. Such negative spikes may result from transformer-like coupling between punch magnet coils or relay coils. Even with the plate circuit breaker open, these spikes can be passed through the 25 micromicrofarad grid to cathode capacitor and be fed back to circuits feeding the thyratron unit. For this reason thyratrons do not provide particularly good isolation between the input and output circuits. To prevent these effects, the selenium rectifier diode shown dotted from the tube cathode line to ground in Figure 54 is used in a number of applications. Due to their size these selenium rectifiers are mounted behind the tube panels, external to the pluggable units. Since a diode acts like a short circuit to electrons flowing in a direction opposite to the arrow symbol, the stray negative signals will be shunted to ground. This diode will also shunt to ground and eliminate the negative spike from the collapsing field of the coil being driven by the particular thyratron unit and in this way help eliminate a source of stray pulses.

The selenium rectifiers provide still another advantage in the circuit. Some thyratron tubes have a tendency to flutter the current flowing through them (regardless of whether the load is inductive or resistive). It is possible for this flutter to be severe enough

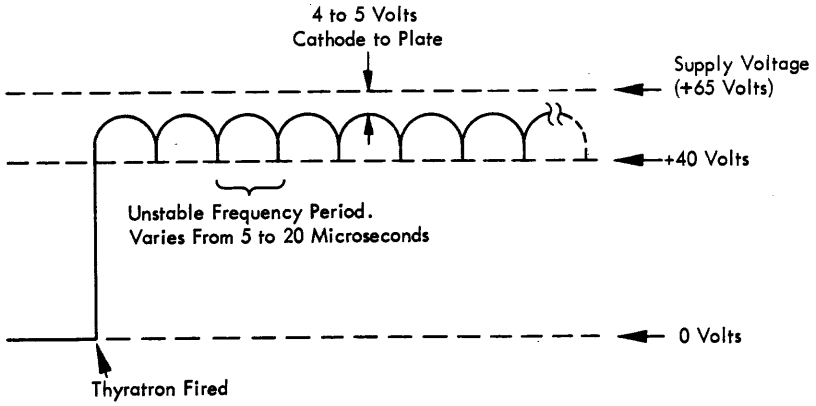

Figure 55. Thyratron Flutter or Oscillation

to cause the gas to deionize during the brief periods when the cathode to plate voltage is at its lowest. Figure 55 shows a waveshape that might be seen across the load of some thyratron units (particularly if the selenium diode is omitted). The peaks of the oscillations reach to within four or five volts of the supply potential, leaving only this small difference across the tube to continue the gas ionization. If the gas deionizes in a capacitor input TH unit, the tube will then cease to conduct until the next input pulse is applied. This could result in dropped punches or relays. The external selenium rectifiers reduce this effect and insure more stable operation.

Trigger (TR) Units (G and H)

Triggers are the memory units of the 604. They are important and versatile building blocks which can generate timing pulses, create electronic control gates, convert electrical impulses from the 521 into electronic conditions, remember that a pulse has been applied, count and store a number of pulses, and so on. Triggers are functionally similar to a holding or latch type relay. Just as a relay can be up or down, a trigger can be ON or OFF, and it will stay that way until controlled otherwise (or until power is turned off). All of the circuit types discussed earlier will be found controlled by triggers, and they will in turn control other triggers.

For all its importance, the trigger is a simple unit consisting of one 6J type dual triode tube arranged in what is fundamentally just two inverter circuits. The circuit in Figure 56 shows one inverter feeding another inverter, an arrangement similar to that found in a trigger.

If the input "A" is connected to a plus 150 volt point, the input resistance network will try to drive the left tube grid to plus 25 volts (though the drawing of grid current will limit this to about plus one volt). The left tube will conduct and drop the left plate to a level near plus 50 volts. The resistance network from this plate to the grid of the right tube will convert this plus 50 volt level to minus 25 volts at the right grid. The right tube is thus cut off and its plate will be plus 150 volts. Because of the double inversion of this cir-

NOTE: The chart shows the voltage levels through the circuit for input signal levels of plus 150 volts and plus 50 volts. The output level in both cases is the same as the input.

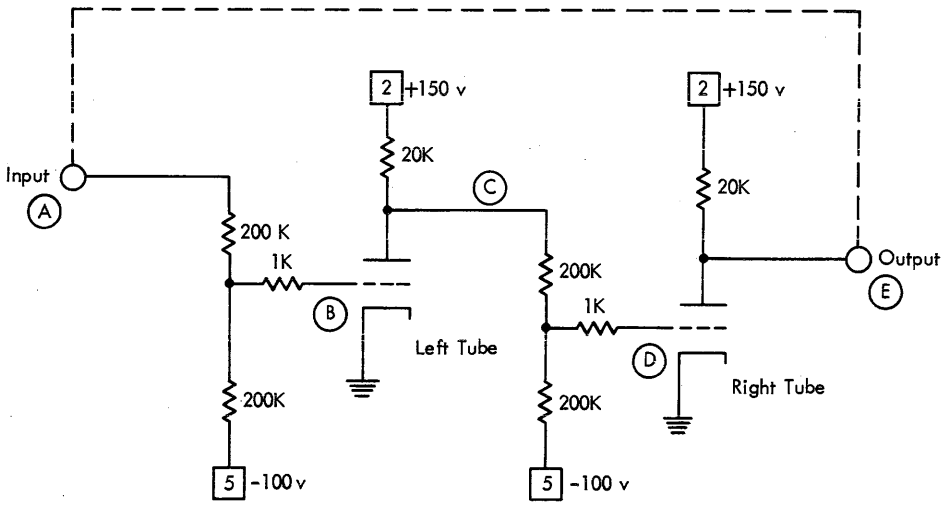

If Input (A) At:	Then (B) At:	(C) At:	(D) At:	& Output (E) At:
+150	+25* (+1v)	+50	-25	+150
+50	-25	+138	+25* (+1 v)	+50

*These Points At These Times Try to Go to +25 Volts But Grid Current Stops Them at About +1 volt.

Figure 56. The Development of a Trigger. One Inverter Feeding Another

cuit the output, "E", is the same as the input signal applied to point "A".

Placing input "A" at a level of only plus 50 volts will cause the left grid to go to minus 25 volts and cut off the tube. This will let the left plate rise toward plus 150 volts (actually stopping at plus 138 volts due to electron flow from the minus 100 volt supply up through the resistance network). With the left plate at this up level, the right grid is made positive and causes the right tube to conduct. The right plate will thus drop to about plus 50 volts. Again the double inversion produced the same level at the output as at the input.

Notice that in both the cases given one tube or the other is cut off and the remaining tube is conducting. In both cases the input and output points are equal. If these two points, "A" and "E", are connected together, as shown by the dotted line, we will have a basic, self-holding trigger unit. Notice the loop arrangement of the circuit: as long as the right tube is cut off, points "E" and "A" are at the high level. As long as they are at the high level, the left tube is conducting. As long as the left tube is conducting, the right tube is cut off. The circuit will stay in this condition until some external control makes the right tube conduct for a brief period. The drop in the voltage level at the right plate will then be coupled to the left tube and keep it cut off. This will in turn force the right tube to *stay* conducting. The loop action will now retain the new status. Note that a tube which is driven beyond cutoff is in a rather stable, non-conducting state; a tube driven into the grid current region is also in a stable, but conducting, state. A condition where both tubes are conducting is so highly unstable that it will be found to exist only during a brief fraction of a microsecond while the trigger is flipping from one conducting status to the other.

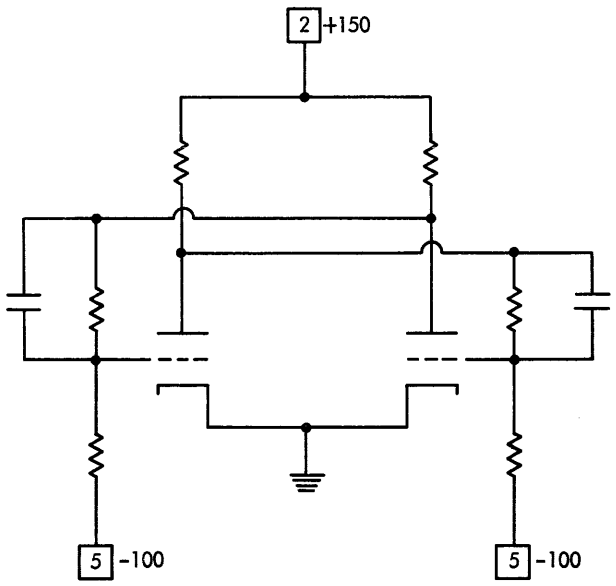

Figure 57. A Trigger with Compensating Capacitors

COMPENSATING CAPACITORS

Figure 57 shows a typical basic trigger circuit as normally drawn. Just as with inverter circuits, compensating capacitors are used from each plate to the grid being fed. These overcome the effects of stray capacitance and more rapidly couple to each grid any shift at the opposite plate. This speeds up considerably the completion of the flipping action once it is started. All trigger types except the TR-41 and TR-42 use them. In these two cases a variation is used to deliberately desensitize and slow down the triggering action. In the circuit descriptions to follow the compensating capacitors will be drawn in only where there is some unusual feature to their overall action. Normally they just speed up flipping and do not have to be considered in a basic discussion. The valve is 100 micromicrofarads.

TRIGGER ON-OFF CONVENTION

A very important convention about triggers must be understood. A trigger is said to be ON *or* OFF depending on which one of the sections in the dual triode used is conducting. If the left triode (as drawn in circuit and tube base diagrams) is conducting, the trigger is ON. If the right half is conducting, the trigger is OFF. Left ON, right OFF. This convention is true regardless of the type of the trigger, its use in the machine, or the logic name given to it. This convention makes discussing circuits much easier. It is shown in Figure 58.

TRIGGER RESET

Triggers are balanced circuits. The two plate resistors within a trigger unit are matched to within 2½%, as are the two plate to grid resistors and the two grid to minus 100 volt resistors. This is done to insure that a trigger will flip as readily in one direction as in the other. A result of this balance, however, is that it is not possible to predict which status a trigger will assume when power is first applied. Whichever triode section heats up first, or has the greatest emission, or first receives a random noise pulse will become the conducting side. The setting of the trigger at the start of a calculation cannot be left to chance if consistent

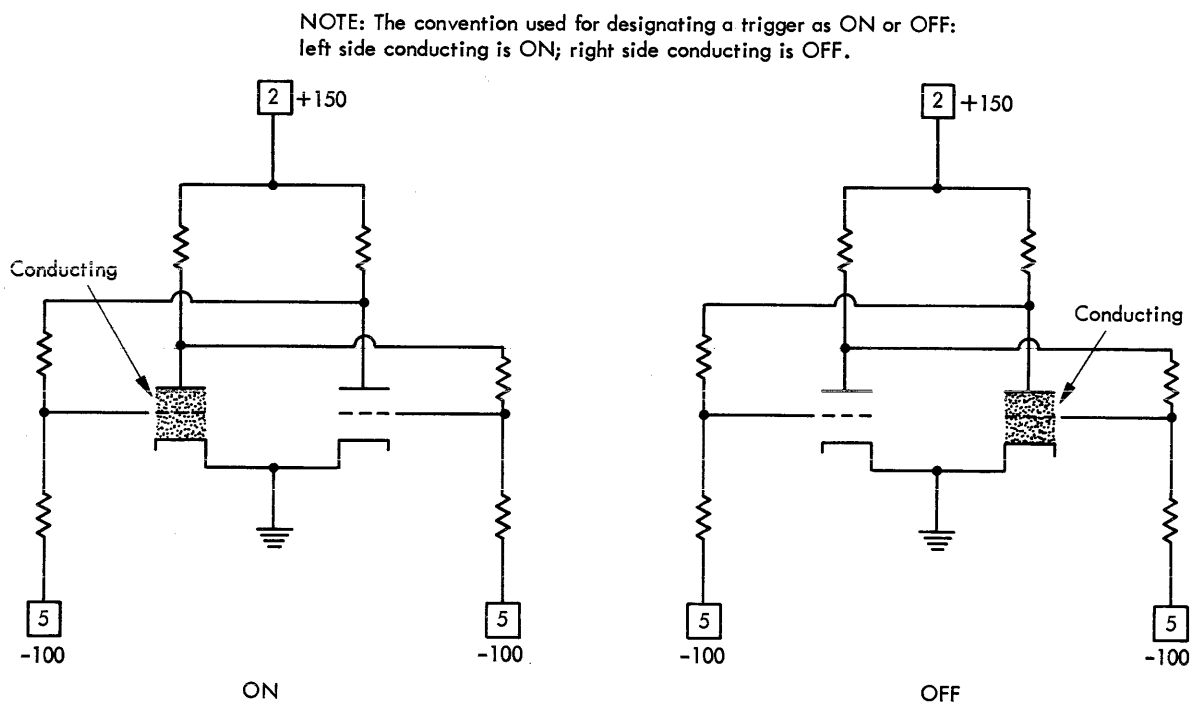

Figure 58. "Left ON, Right OFF"

answers are to result. For this reason special resetting circuits have been developed to insure that a trigger or group of triggers is correctly set to start an operation.

Removing the minus 100 volts from the lower end of one of the grid resistors (the right side in Figure 59) will remove from that grid any negative going tendency. The released grid will thus go positive, force conduction to take place in that side of the tube, and make the plate drop to about 50 volts. This will be reflected at the other grid (which still has the minus 100 volt supply attached to its grid resistor) as a minus 25 volt, cutoff level. The trigger status is then set and will not change when the removed minus 100 volt basis is reapplied.

While Figure 59 shows the circuit to leave a trigger in the OFF state after reset, triggers are just as easily

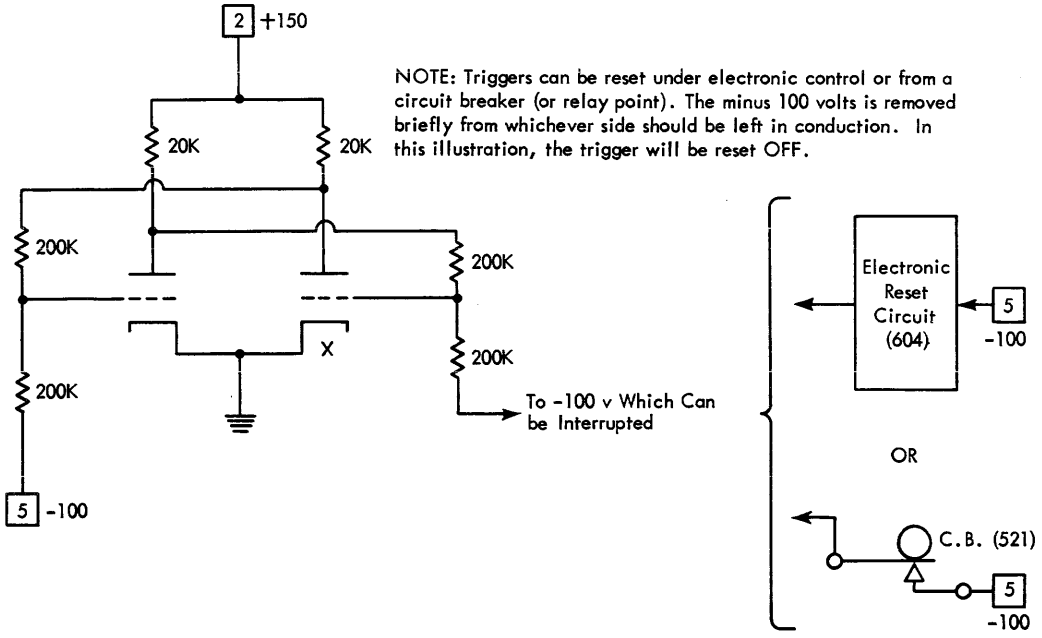

Figure 59. Trigger Unit Reset

reset ON by interrupting the minus 100 volts from the left side grid resistor. The "X" under the right cathode in Figure 59 is a symbol frequently used on wiring diagrams (G suffix and earlier) to indicate the side of the tube which will be conducting just after reset. On the *System* (block) *Diagrams* (used for H suffix 604's and to be described later) the reset status is indicated by the location of the "type of reset" box within the larger box representing the trigger.

The method used to remove the minus 100 volts varies with the particular application. Units can be reset during a program step of a calculation by using an Electronic Reset circuit which removes the minus 100 volts for 110 microseconds. This "ER" circuit will be described separately later. A circuit breaker in the 521 can be used to remove the minus 100 volts from desired triggers during punching time (Punch time Reset, PR) or during calculating time (Calculate time Reset, CR). Those triggers needed for calculating purposes are properly reset during reading or punching time by the "PR" circuit breaker. Those circuits needed for punching and reading are reset during calculate time by the "CR" circuit breaker. A few triggers in the 604H are reset at the end of punching time by a third circuit breaker feeding the Unfinished program Reset, UR, line.

The 604 Counter unit is usually reset electronically, but in addition to this the minus 100 volts supplying one side of each trigger in this unit goes through a relay point. This relay is itself picked up by the minus 100 volt supply. When DC power is applied to the machine, the time taken to pick the relay will give a delay of ten milliseconds or so before the minus 100 volts is applied to the relay controlled side of the triggers. This causes them to reset to the desired status.

TRIGGER FLIPPING

Five circuit arrangements for flipping triggers are used in the 604. One of these, removing the minus 100 volts from one side, has been described above and is used exclusively for resetting. For high speed flipping of triggers during reading, calculating, or punching, one of the other four control methods will be used as fits the application. The one point to remember about triggers used in the 604 is that if external controls make them assume a status for several microseconds or more, the trigger will stay in that status when conditions return to normal. There are three points in the trigger circuit loop where this external control can practically be applied: 1) The high level plate can be pulled down, 2) the positive grid can be driven to cutoff, or, 3) the cutoff side grid can be driven positive. All of these are used in the 604.

Plate Pullover. Figure 60 shows the basic circuit for what is called the plate pullover type of trigger control. The control tube is one triode of an INverter unit biased so it rests cut off, acting like an open circuit. A positive pulse applied to the control tube grid will make the tube conduct and pull the plate down to about plus fifty volts. The control tube plate is directly tied to the plate of the right side of the trigger and will pull that plate down with it. This negative going shift is coupled to the left trigger tube, cutting it off and letting its plate go positive. This positive shift is coupled

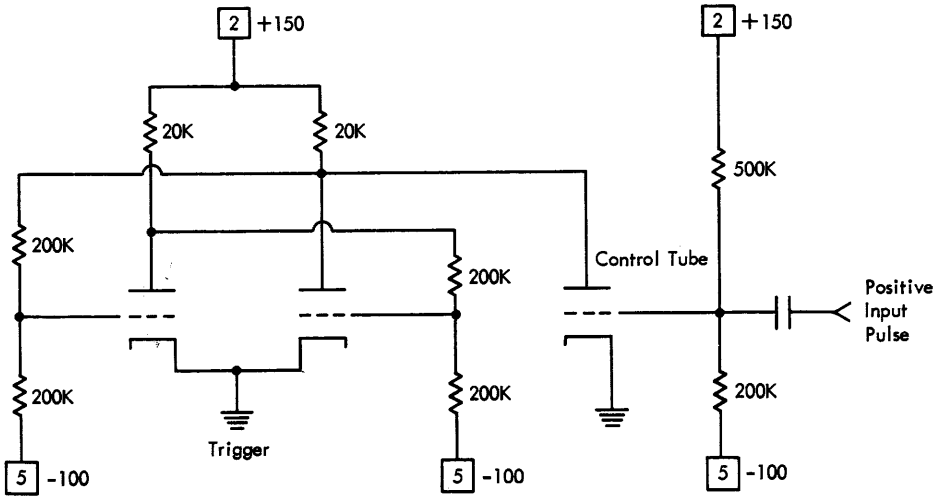

Figure 60. The Basic Plate Pullover Circuit

to the right trigger grid and will make the right tube conduct. When the input pulse is removed and the control tube again cuts off, the conducting right trigger tube will hold its own plate at the low level. The trigger is now OFF. Further impulsing of the control tube will have no further flipping effect on the circuit because the right trigger plate is already at its low level. This sharing of a common plate load resistor by two tubes is similar to that of the Inverter Switch discussed earlier in this chapter.

With the circuit as drawn in Figure 60, the trigger can only be flipped to the off position. To turn the trigger on (make the left side conduct) a second control tube can be attached to the left plate; or the trigger can be reset on; or one of the grid input arrangements described below can be used. Like the resetting circuit, plate pullover can be used with any general class of triggers. The wiring within the pluggable unit must provide a pin connection directly to the desired trigger tube plate or plates, however. Since base pins are at a premium in some trigger units, not all types have these direct plate connections and therefore cannot use this type of flipping control. Unlike other flipping methods, an extra control triode must be used. This circuit is used primarily to provide an extra, isolated input to a trigger already being fed with another control method.

Direct Grid Input. This method of flipping a trigger is applicable only to that class of triggers having direct resistance connections to the tube grids. In the 604 this Direct Coupled class of triggers contains four types only, the TR-31, TR-32, TR-41, and TR-42. Figure 61 shows the basic circuit for this class. An 82k isolating, current limiting resistor is run from each grid to the input point connector. This is the only change in the basic trigger circuit as discussed up to now.

If the trigger in Figure 61 is assumed to be ON (left side conducting) there are two ways it can be flipped OFF from a *direct coupled* grid input signal:

1. A negative potential of fifty volts or so can be applied to the left input point, "A", which will cut off electron flow through the left tube. This will permit the plate to shift toward plus 150 volts, force the right tube to conduct, and flip the trigger.

2. The second way is to apply a plus fifty volt potential to the right input point, "B". This will force the right tube to conduct and pull its plate down, cutting off the left tube and completing the flipping of the trigger. It is this second method that is used in the 604. A plus fifty volt potential is applied to the right input point to turn such a trigger OFF or to the left input point to turn such a trigger ON.

This Direct Coupled class of triggers is used in the 604 primarily to convert electrical conditions from the 521 into electronic levels usable by the 604. The reading brushes and circuit breakers which feed such triggers supply the needed plus fifty volts. Brushes and circuit breakers have been known to bounce while making, even when in perfect condition. In relay circuits used in non-electronic machines this bounce, unless too severe, does little more than delay the pick of the relay or magnet being controlled. Triggers, on the

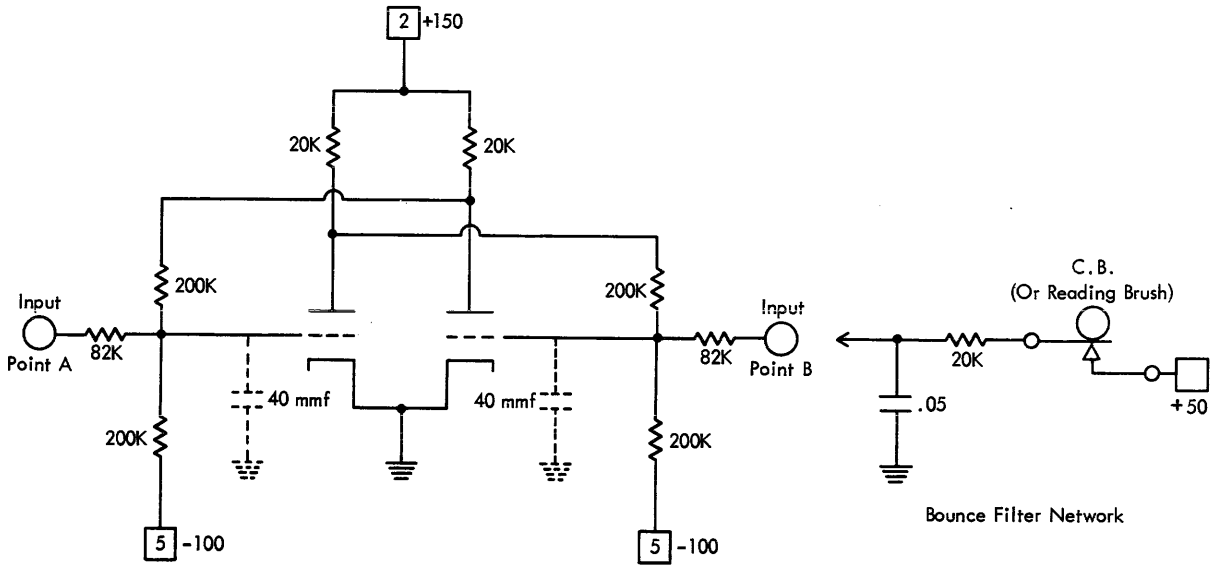

Figure 61. The Direct Coupled Trigger Input

other hand, can change their status in two millionths of a second. Such contact bouncing could produce noise and spikes that would make the trigger flip several times instead of once and make its final status a matter of chance. To eliminate the effect of this bounce, resistance-capacitance filters are used right at the input to the trigger with types TR31 and 32. This is shown in Figure 61. A .05 microfarad capacitor shunts to ground any noise pulses. Until this capacitor has been charged to the proper level through the 20k resistor, the trigger will not flip. This will delay, by a millisecond or so, the time at which the trigger will begin to flip, but once the flipping begins it is completed very rapidly (about two microseconds). The .05 capacitor is physically too large to mount within the pluggable unit. For this reason these resistance-capacitance filters will be found wired in on the unit panels. Within the units themselves additional 40 micromicrofarad capacitors connected from each grid to ground work in conjunction with the 82k input resistors to provide additional filtering. These capacitors are shown dotted in Figure 60.

Trigger types TR-41 and TR-42 make use of a different type of filter to desensitize them to short noise spikes and contact bounce. A 1000 micromicrofarad capacitor (which is small enough to mount directly within the pluggable unit) is connected between each grid and the same side plate. Figure 62 shows the circuit.

These triggers are designed to work from plus fifty volt impulses from the 521. Assume the trigger of Figure 62 is OFF. The left tube will then be cut off and its grid at minus 25 volts. If a short duration positive spike is applied to the input point "A", the grid will try to rise. At some point electrons will begin to flow through the tube and start to make the left plate go in a negative direction. This negative plate shift will be coupled back to the same side grid through the 1000 micromicrofarad capacitor. This will in large measure neutralize the input pulse and prevent further lowering of the plate potential, thus suspending the flipping of the trigger. If the input pulse lasts long enough (two milliseconds or longer), the plate to grid capacitor will charge fully and become an open circuit incapable of further oppositional feedback. At this point, the trigger will start to flip. This type of trigger is rather slow to complete its flipping operation: seven or eight microseconds are required, whereas other trigger types flip in two.

Notice that the cathodes of this type of unit are not grounded but are instead returned to minus 100 volts through a common 20k resistor. This cathode coupling circuit reduces the sensitivity of such a unit to variations in supply voltages (plus 150 and minus 100 volts).

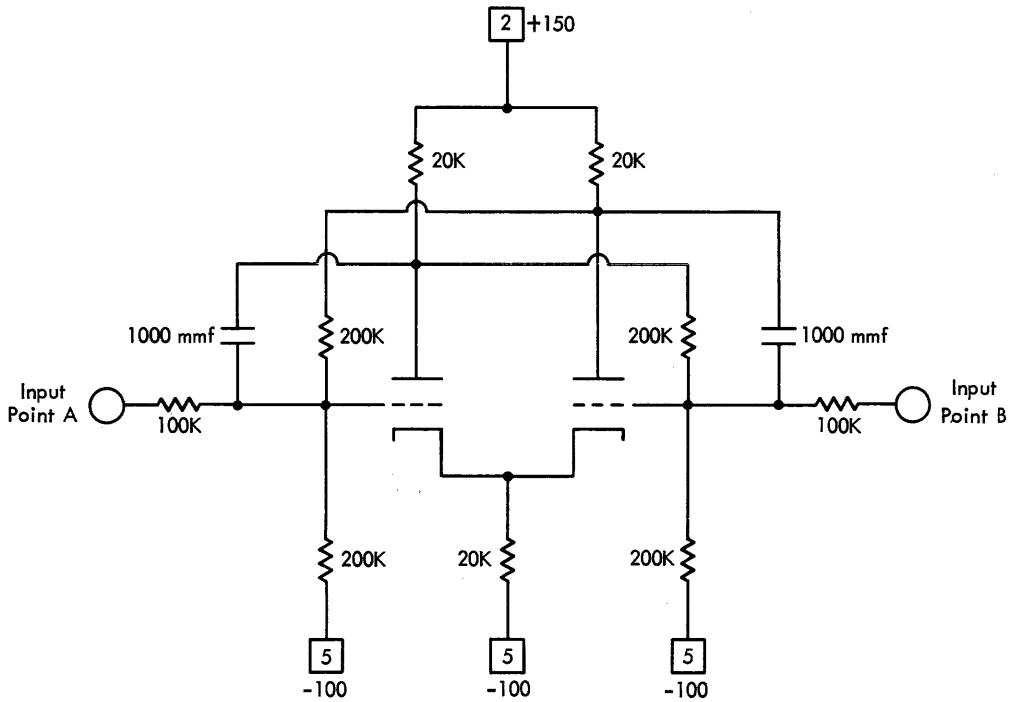

Figure 62. Desensitized Triggers, Types TR41 and TR42

Capacitive Grid Input. Capacitive Input triggers are a second class type used in the 604. Inputs to the grids of the tubes in these units must pass through 40 micromicrofarad capacitors. This is an important change since now only sharp, fast-changing voltage shifts applied to the inputs can cause the trigger to flip; capacitors only couple to the grids changes in voltage, not steady states or direct current. While triggers of this type can be designed to have various characteristics, those used in the 604 will only respond to **negative shifts of more than four microseconds duration and more than twenty volts amplitude.** Circuits which are to flip these triggers normally provide a minimum of ten microseconds and forty volts. **Positive shifts will not affect this class of 604 triggers** regardless of the duration of the shift, unless the amplitude is quite large (80 to 100 volts, or more). These characteristics are deliberately built into these triggers to simplify overall machine design. These triggers are extensively used in the electronic controlling circuits of the machine. A typical, basic Capacitive Input trigger circuit is shown in Figure 63. The compensating capacitors are shown in this illustration because they have a special action in reducing trigger sensitivity to positive input shifts.

As a starting point for discussion, assume the trigger is OFF (right side conducting). This will mean that the left grid is negative (about minus 25 volts) and cutting off electron flow through the left tube. Applying negative shifts to the left side input point "A" will therefore have no effect on the circuit since they will only drive the grid more negative. Since the left tube is cut off already, this can produce no change in the potential at the left plate (a necessary action if the trigger is to flip). A negative shift applied to the *right* grid input point, "B", however, can produce a plate action and cause flipping. The right grid rests at about plus one volt when the trigger is in the OFF state. Heavy electron flow is occurring through the right tube. The right plate is therefore at a low level near plus fifty volts. A negative shift applied to the right input point, "B", will couple through the 40 micromicrofarad capacitor and drive the left grid negative. If the amount of the shift is great enough (twenty volts or more, to allow for losses through the capacitor), the right grid will be driven beyond the tube cutoff point of minus eight volts. The right plate will shift instantly to its up level near plus 138 volts. This shift will couple to the left grid and force the left tube into conduction. The lowered potential resulting at the left plate will couple back to the right grid and keep the right tube cut off even after the original input shift is no longer being coupled through the input capacitor. The input shift will disappear at the grid either because the input signal is removed or because the capacitor became charged and no longer coupled what had become to it a steady state condition. This total action from the start of the input shift until the trigger is self-held in the flipped status takes from two to four microseconds. In summary, a twenty volt negative shift applied to the conducting side input will flip a trigger such as this.

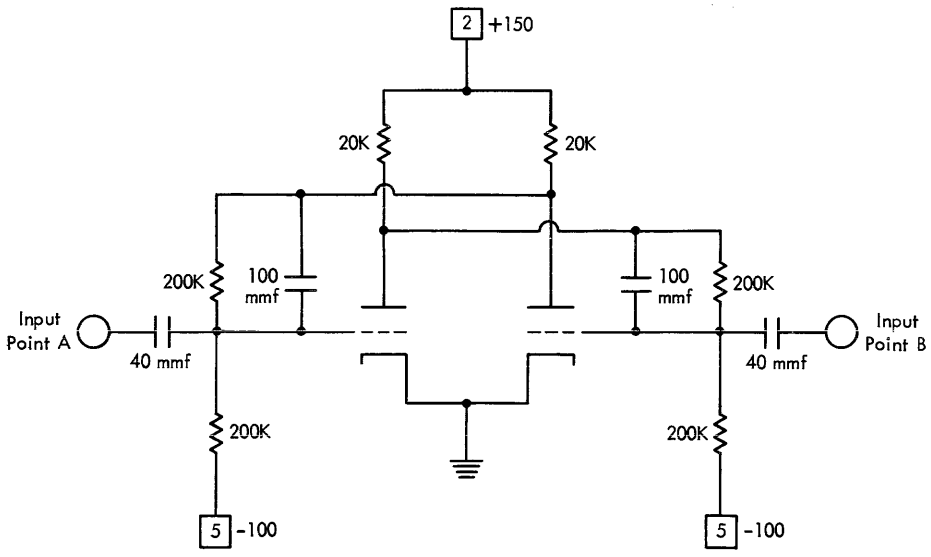

NOTE: Capacitive input triggers in the 604 respond only to negative shifts.

Figure 63. A Capacitive Input Trigger

At first thought it would seem that a positive shift of fifty or sixty volts applied to the non-conducting side input would be able to flip such a trigger, just as was true with the Direct Coupled class described earlier. Such is not the case due to a combination of reasons. For example, the cut off side grid is held by the unit resistors at a point almost twenty volts lower than the cutoff point of the tube. If the full amplitude of the input shift reached the grid, it *would* probably cause triggering, but there is a shift loss through the 40 micromicrofarad input capacitor. This capacitor is in series with the 100 micromicrofarad compensating capacitor. Together these capacitors form a voltage divider for input shifts. As a result, about two thirds of the signal is lost across the input capacitor. Even a fifty or sixty volt positive shift will therefore not drive the grid to the conduction point. A second factor working against the flipping of a trigger from a positive shift involves grid current. If the plus shift does drive the grid positive, the drawing of grid current will quickly charge the input capacitor and convert it into an effective open circuit before the trigger has a chance to complete its flipping cycle.

Positive pulses applied to the conducting side of the unit have no appreciable effect on the already conducting tube, and are furthermore swamped by the drawing of grid current. In summary, 604 capacitive input triggers will not respond to normal amplitude positive shifts.

Binary (commoned input) Triggers. A Binary Connected trigger has both grids fed in parallel from one common input point. It is designed to respond to negative shifts only, and will change its status, whether ON or OFF, each time a negative shift is received. Every second pulse will return the trigger to its original position. Thus the term *binary* (meaning by two's). All binary connected triggers are capacitive input. The capacitive input triggers discussed above can be and frequently are externally wired to convert them into the binary acting circuit to be discussed here. There is, however, a third, Binary Connected class of triggers used in the 604 in which the common input connection is made internally. Whether internally or externally connected, the operation is the same. Their use is very important in the storage and counter units of the 604.

A comparison of the binary trigger circuit of Figure 64 with the capacitive input trigger of Figure 63 will reveal the great similarity. The two 40 micromicrofarad input capacitors have been tied together at the input point. The 100 micromicrofarad compensating capacitors paralleling the resistors from each plate to the

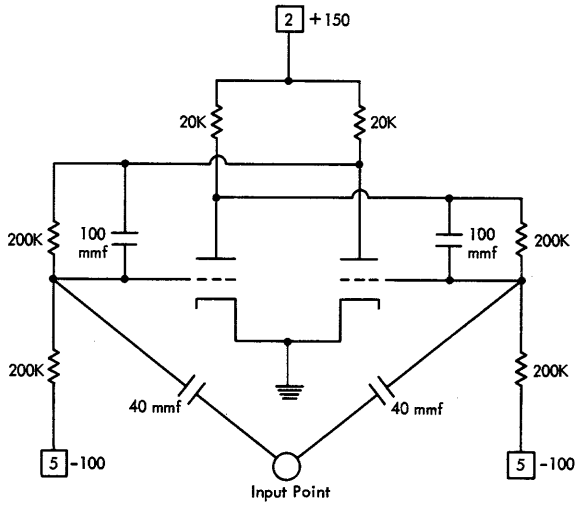

Figure 64. A Binary, Commoned Input Trigger

opposite grid have also been shown in this circuit; in the binary connected trigger their inclusion is most important if a change of trigger status is to be obtained *from a pulse applied to the common input point.*

Assume that the binary connected trigger of Figure 64 is in the OFF status (right side conducting). A negative shift of twenty volts or more applied to the common input point will go to both grids. Since the left grid is already below cutoff, the input pulse merely drives it further negative and has no other effect on the tube. The shift felt at the right grid, however, quickly changes the status of the right tube from conduction to cutoff. For an instant neither tube is conducting. Then the plus shift of the right plate due to that tube's being cut off, couples to the left grid and forces the left tube into conduction. The resulting drop in potential at the left plate couples to the right grid and holds the right tube cut off, completing the flipping action.

The action of the compensating capacitors in making this circuit flip from a pulse applied to the common input point can be seen from a slow motion analysis. Notice that the compensating capacitors have two and one-half times the capacity (100 mmf) of the input capacitors (40 mmf). The length of time a capacitor will continue to couple a pulse or gate signal from one point to another depends on the capacitance and the resistance in the circuit. This is called the Time Constant of the circuit and was discussed earlier in this chapter under "Practical Inverter Circuits, the Coupling Capacitor." The input circuit of these triggers will couple a shift to the grids for about four microseconds. The compensating capacitor circuit, on the other hand,

will continue to couple a shift for about ten microseconds.

Assume again that the trigger in Figure 64 is OFF (conducting on the right). When the negative input signal is applied to the common input point, both tubes are cut off. There is no change at the left plate because that tube was already cut off. The right (formerly conducting side) plate is released, however, and goes positive. This positive shift will continue to be fed through the compensating capacitor to the left grid for about ten microseconds. The input signal cutting off both tubes will cease to be felt after only four microseconds.

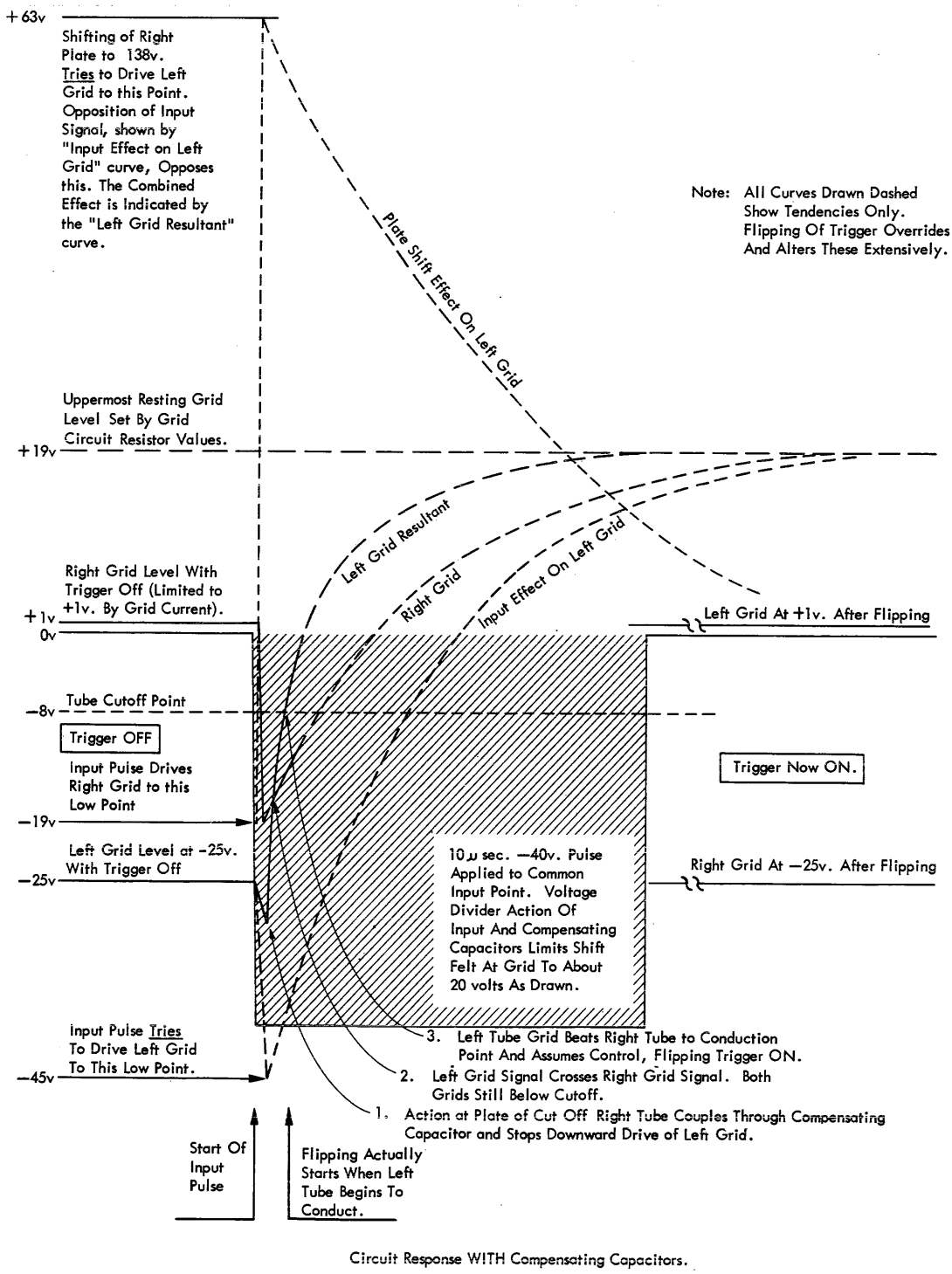

Figure 65a. Waveshapes of Binary Trigger Action With Compensating Capacitors

The longer lasting, compensating capacitor fed shift will thus assume command at some point and force the left tube to conduct and flip the trigger. Because the shift at the right plate is much larger than the input signal (100 volt plate shift as against a normal 40 volt input signal shift), the compensating capacitor fed shift will assume command and flip the trigger even before the input capacitors stop coupling their signal. The usual *binary coupled* trigger used in the 604 will flip in about three microseconds.

Without the compensating capacitors in this example the action is different. The input shift will drive both grids downward by the same amount from their starting points. Without the compensating capacitor to act as capacitive voltage dividers, practically the full amount of the input shift will be felt at the grids. With a 40 volt input signal the left (cut off) grid will be shifted downward (from its minus 25 volt starting point) to a level of about minus 65, a forty volt drop. The right, conducting side grid will also be shifted downward

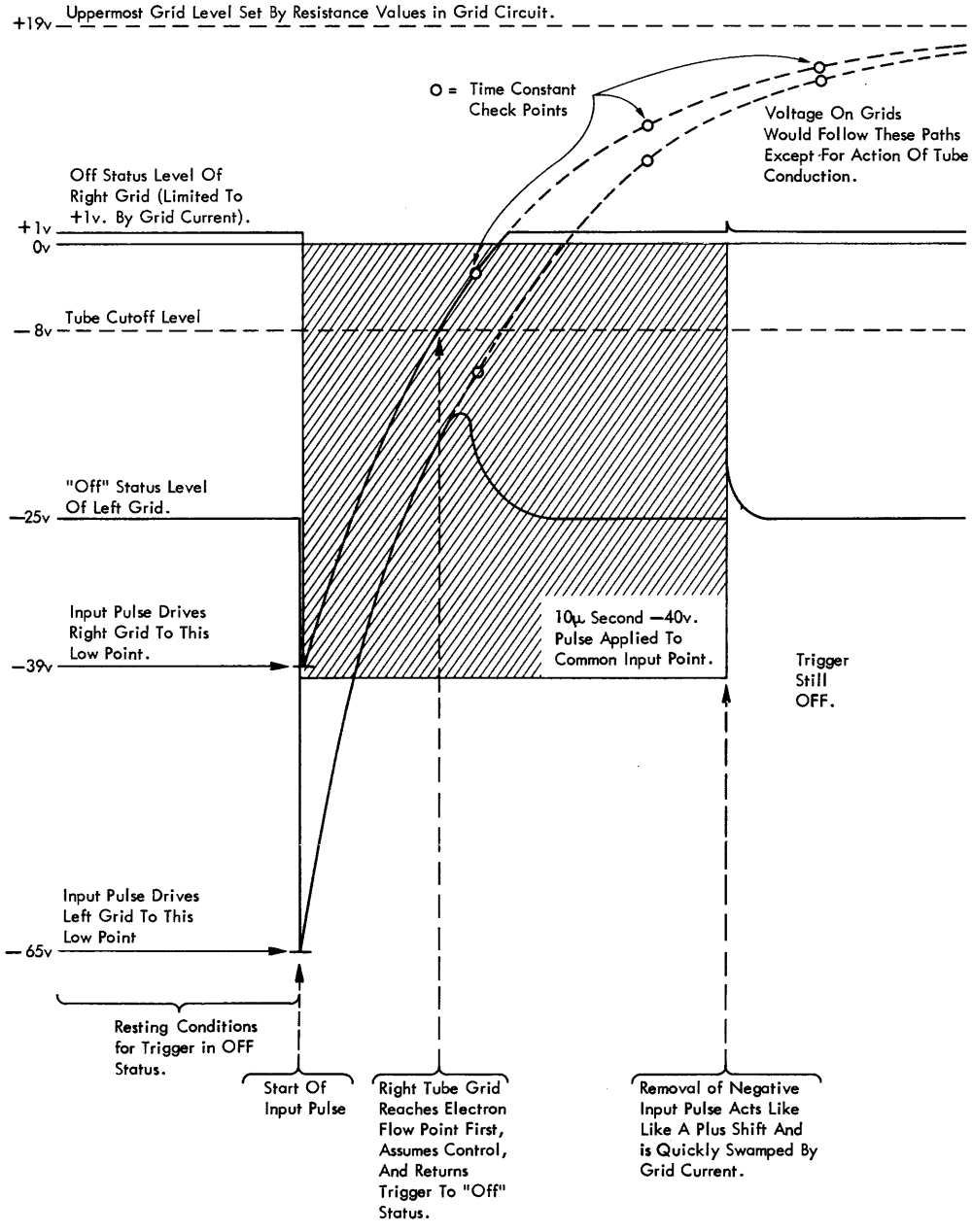

Circuit Response WITHOUT Compensating Capacitors.

Figure 65b. Waveshapes of Binary Trigger Action Without Compensating Capacitors

forty volts (from its starting point of plus one volt) to about minus 39 volts. This will cut off the right tube; but without the compensating capacitor to quickly bypass it, the plate to grid resistor will itself absorb the resultant plate shift. As the 40 mmf input capacitors gradually become charged, these grid voltages will follow a charging curve aiming toward plus 19 volts (the value the grids would try to assume due to the voltage divider action of the circuit resistors alone). The right grid, being less negative to begin with, will reach the conduction point before the left grid. The right tube will thus go into conduction first, assume control, and return the trigger to its former OFF status without flipping. The binary connection thus makes compensating capacitors of the correct size a necessity if flipping is to occur. The two parts of Figure 65 show in simplified graphic form the timings involved both without and with compensating capacitors.

TRIGGER UNIT CIRCUIT VARIATIONS (G AND H)

As with other types of units, there are certain special items found in trigger unit circuits: 1) A 1000 ohm resistor is directly in series with each tube grid. This would appear to be a grid current limiting resistor but is actually included to suppress parasitics (erratic voltage fluctuations which triggers can produce due to the speed with which they flip). 2) Some trigger units have a small, 10 mmf capacitor connected from grid to grid. This acts to slightly desensitize the trigger to short noise pulses and delays just a bit the start of the flipping action on a normal pulse. 3) Triggers are generally driven by 40 or 50 volt shifts since they are most reliable in this area. When triggers are used to drive other triggers directly, a tapped output must be provided on one or both of the plate load resistors to supply the desired 40v portion of the 100 volt plate shift. 4) A few trigger types (604H only) have a built-in germanium diode to help provide a needed "tens limiting action" when these triggers are used in counter and storage circuits. This will be discussed in the next chapter.

Properly designed triggers such as used in the 604 are reliable storage devices with a high degree of stability and lack of sensitivity to supply voltage variations. Varying either the plus 150 or the minus 100 volt supplies over a range of plus or minus 10 percent will not upset normal operations.

The Multivibrator (G and H)

A trigger was shown to be simply two resistance coupled inverters that would hold themselves in one status or another when once set. A multivibrator is similar to a trigger except for the substitution of plate to grid *capacitors* for the plate to grid *resistors* of a trigger. Since a capacitor is incapable of passing and holding a *steady state* condition, the multivibrator repeatedly and automatically changes from one status to the other, producing a desirable, pulse-like waveshape output. The circuit for a basic multivibrator is shown in Figure 66. Notice that the grid resistors are returned

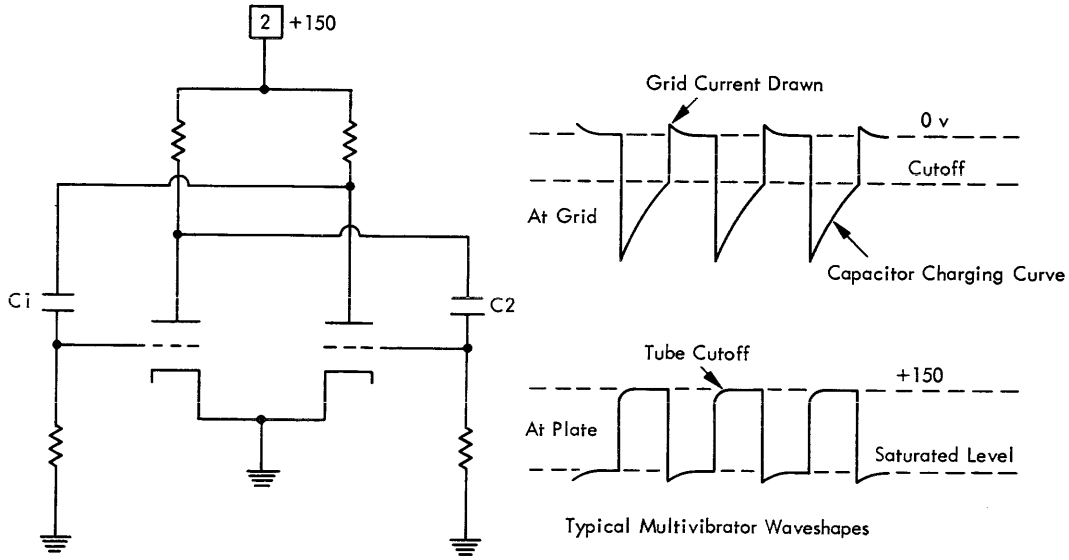

Figure 66. The Basic Multivibrator and Typical Waveshapes

to the same potential as the cathode (ground in the illustration) rather than the minus 100 volts used in the trigger. The one and only multivibrator used in the 604 is the source of the basic timing pulses for the machine. It is externally wired using an IN type unit as its basis.

No two tubes are ever exactly matched. When power is first applied to a multivibrator, one of the tubes will conduct first or more heavily. Let us assume this is the left tube. The left tube plate will drop in potential first or more rapidly. This negative shift will couple through the capacitor C2 to the right grid and hold the right tube cut off. The left plate will continue to drop until the left tube is passing maximum current and can lower its plate potential no further. All this while the right tube is being held cut off through the coupling action of the capacitor C2. When the circuit settles with the left tube conducting and the right tube cut off, the capacitor C2 will gradually become an open circuit and permit the grid of the right tube to move toward zero volts. When the right tube cutoff point is reached, a few electrons will begin to flow through the right tube. This will lower the potential at the right plate. This negative shift at the right plate will couple through capacitor C1 and cause the left grid to move negatively. Electron flow through the left tube will be reduced and the left plate will start to shift positively. This positive shift will couple through the capacitor C2 and cause the right grid to move upward even more quickly. The right plate potential drops even further, which further cuts off the left tube. In a fraction of a microsecond this feedback-loop action is completed and stops when the left tube is cut off and the right tube saturated. The left grid now begins to move toward zero volts. When the left tube cutoff point is reached, the few electrons that trickle through the tube as a result start the entire flipping action in reverse, ending with the left tube conducting and the right cut off. This back and forth action will continue as long as power is applied. How long it takes on either half of the cycle for the cutoff tube to start passing electrons depends upon electrical size of the coupling capacitors and the resistance value in series with them (in this case primarily the grid to ground resistors). The larger the capacitance and the resistance values are, the longer the RC time constant, and the longer each half cycle will take. If each half cycle is to be the same (as is desired in the 604), the coupling capacitors and grid resistors for each side of the circuit must be equal.

Figure 67 shows a typical multivibrator circuit as used in the 604. It is frequently desirable to be able to vary the frequency of the multivibrator (and thus examine the circuits under abnormal conditions as an aid to analysis). The resistors in each grid circuit are made variable and ganged together for this reason. The

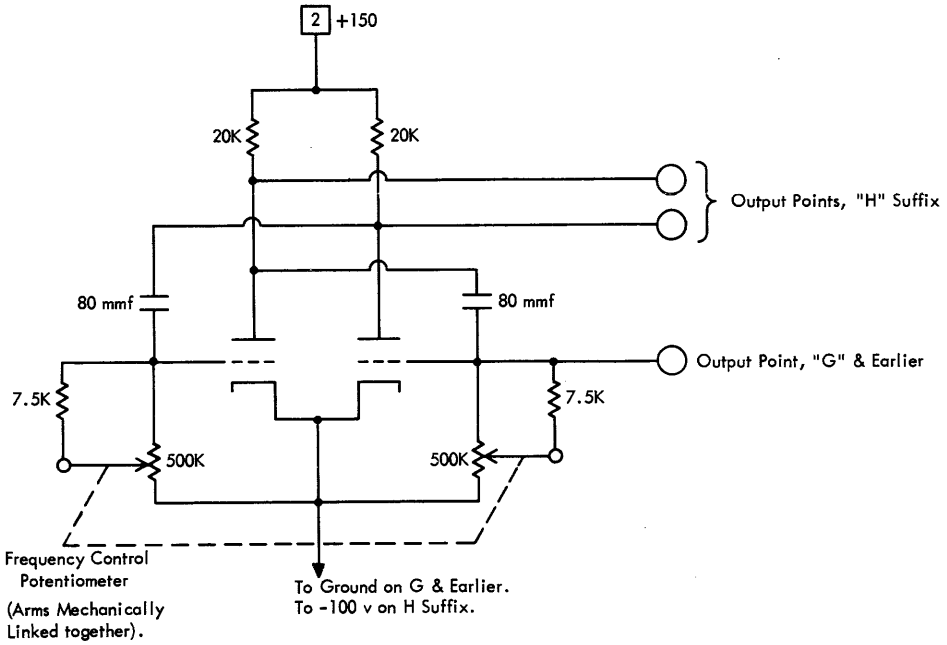

Figure 67. 604 Multivibrator Circuit

frequency range of the circuit is from about 5,000 cycles per second to 100,000. The normal working frequency is 50,000 CPS.

Machines wired to the "G" and earlier suffix prints also have a special control switch setting which places larger (.05 mfd) capacitors in parallel with the 80 mmf coupling capacitors. This "LO" setting is used only for testing and changes the multivibrator frequency range to between 1 cycle per second and 100. At this very low frequency it is possible to watch data flow through the machine.

The signal output from a multivibrator can be taken either from a grid or from a plate. The design of different circuits using the output of the multivibrator may find one or the other more desirable. In the 604H an output is taken from each plate. In the earlier 604's the normal high speed setting output was taken from the right grid and the low speed setting from the right plate.

To produce the square wave signal most desirable for timing control of the 604, the output of the multivibrator is run through one or more shaping tube units. These units are driven into the cutoff and the grid current regions as discussed earlier in this chapter under "Inverter Units, Clipping and Shaping." The peaks of the normal multivibrator output are leveled off in this way. In the 604H, as indicated by Figure 67, the cathode and grids of the multivibrator are returned to minus 100 volts rather than ground. With the plus 150 still used as the plate supply, this connection gives a total of 250 volts across the multivibrator. The resultant output signal shifts from plus 145 to minus 30 volts, a shift of 175 volts. This is almost twice the signal available from 604G and earlier circuits and is much more easily clipped and shaped, allowing the use of fewer shaping tubes by the H suffix machine. Figure 68 shows a good square wave signal such as produced and used by 604's.

Neon Indicators (G and H)

It is frequently desirable to be able to tell the status of a trigger or a control line while checking the operation of the machine. This could be done in some cases with a voltmeter or an oscilloscope, but in many instances the mere act of attaching the instrument to the trigger would be enough to flip it. Customers checking program layouts step by step like to trace information flow and development throughout the machine. Using a voltmeter would be tedious and impractical for such an application. Fortunately the small and inexpensive type NE-2 baseless neon bulb lends itself ideally to 604 indicating purposes. This tube will start to glow whenever 90 volts or more is applied across its terminals and will extinguish when there is less than 60 volts. A one million ohm series resistor limits the current drawn by these bulbs to a very low level and prevents circuit loading and interaction. The bulb and resistor units are generally connected to glow when the particular trigger is ON or when a control line is high. They are wired directly in behind the unit sockets where their indication will aid Customer Engineering analysis. A second set, primarily for customer use but also valuable to a Customer Engineer, is compactly arranged in an indicating panel located directly above the 604 Control Panel. These bulb and resistor units have the resistor directly connected to the desired active point in the circuit. A lead runs from the resistor to the bulb. The other side of the bulb is connected to a voltage source (obtained in some cases from a resistor voltage divider) such that the difference of potential across the bulb and resistor will be above 90 volts to glow or less than 60 volts to be dark.

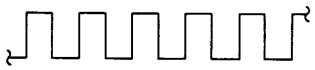

Figure 68. A Square Wave Produced by Clipping and Shaping the Output of a Multivibrator

Figure 69 shows two alternate ways of connecting a neon indicator to a trigger so the bulb will glow when the trigger is ON. Both systems are in use on different 604 triggers depending on convenience of wiring. Bulb "A", in parallel with the left plate load resistor, will glow when the trigger is ON because at this time there is a 100 volt drop across the load resistor. This reduces to about 12 volts when the trigger is OFF. The bulb "B" connection is between the right plate and ground. When the trigger is ON, the right plate rises to plus 138 volts and makes the bulb glow. When the trigger is OFF, the right plate drops to plus 50 volts, which is not enough to cause a glow. Similar circuits can be used with Inverters, Power Units, Pentagrid Switches, etc., to indicate the cutoff or conducting status. Other arrangements (used primarily on the 604H) will be found on *System Diagrams* page 0-0005.

Charts showing the location of the neon bulbs behind the tube panels, and their indication, for both the H and G suffix machines, are in the Appendix. These charts are important because the operation of the machine is revealed by its neons.

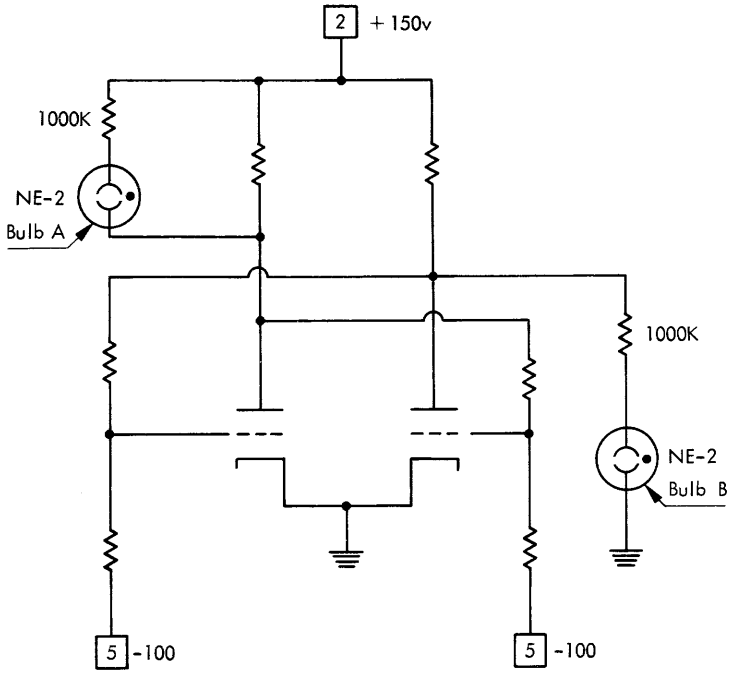

Figure 69. Neon Indicator Bulb Circuits for Triggers

The Electronic Reset Circuit (G and H)

In the discussion of triggers it was shown that a trigger can be reset to a desired status by momentarily removing the minus 100 volt bias supplied to one or the other of the grid resistors. Cams or relay points are practical for slow speed resetting under control of the 521. Resetting during electronic calculating needs a faster, smoother, and electronically controllable device. Through the use of the Electronic Reset circuit a group of triggers can be reliably reset in 110 microseconds or less.

Due to voltage loss through the reset control tubes, the source of power for the minus 100 volt Reset Lines is the minus 175 volt supply. Except while actually resetting, the voltages supplied to each side of a trigger should be closely balanced. A standard testing procedure used with the 604 entails varying the output of the minus 100 volt supply, plus and minus ten percent while calculating. The regulating portion of the reset circuit keeps the Reset Lines within a fraction of a volt of the bias supply output at these altered levels. Aging reset circuit tubes and varying circuit loads are also compensated.

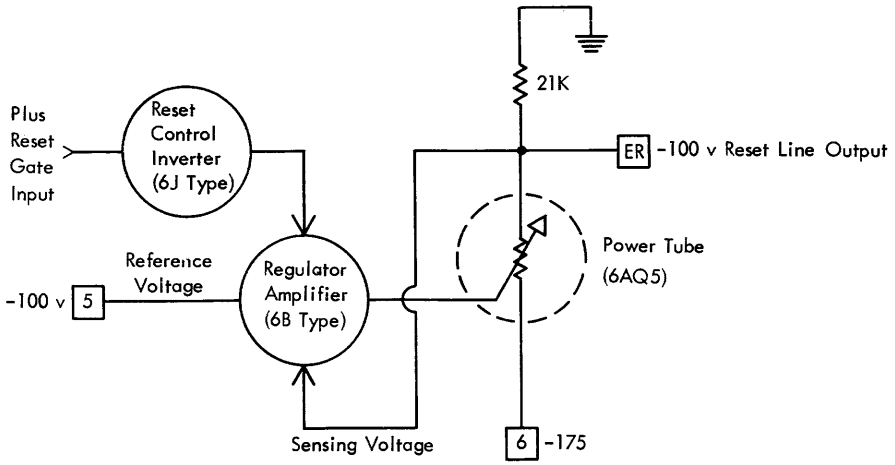

Figure 70. Basic Workings of the Reset Regulator

A logic diagram of the reset regulator is shown in Figure 70. A voltage divider between ground and minus 175 volts provides the desired minus 100 volt electronic reset output. One of the "resistors" in this voltage divider is actually a 6AQ5 power tube. The cathode to plate resistance of this tube is variable over a wide range by changing the potential of the 6AQ5 grid with respect to its cathode. If the grid is made more negative with respect to the cathode, the effective resistance of the tube is increased and the Reset Line will move nearer to the zero volts of ground (and vice versa). The grid to cathode potential of the 6AQ5 tube is controlled by the Regulator Amplifier tube. This uses the minus 100 volt supply as a reference source against which the Reset Line is compared. Any difference between the minus 100v bias supply and the Reset Line is sensed and the proper correction applied to the 6AQ5 grid to restore equality by shifting the Reset Line. When reset of the triggers is desired, a plus shift or gate is fed into the Control Inverter tube. The end result of this is electron cutoff in the 6AQ5 power tube, making it effectively an open circuit that lets the reset line shift upward to ground or zero potential.

Figure 71 shows the reset circuit used in 604 machines. One such circuit is provided for each General Storage Unit, each Factor Storage Unit, the MQ Unit, and the Counter (a total of ten). When studying this circuit it is important to recall that the absolute voltages with respect to ground do not have much effect on vacuum tube actions. It is the voltage on one tube element with respect to another that is important. For instance, the 6AQ5 power tube has no positive potential on its plate. The cathode is at minus 175 volts, however, and to electrons there the plate seems positive and attractive. By putting the proper potential on the grid of the power tube with respect to this minus 175 volt cathode, exactly 75 volts can be dropped through the tube, leaving minus 100 volts for the reset line. The potential on the 6AQ5 grid is determined by the resistors making up the voltage divider in its grid circuit. This voltage divider consists of a 207k, an 820k and a 100k resistor in series running from minus 250 volts up to plus 150 volts. The plates of the 6B Amplifier and the 6J Control Inverter tubes are connected to the lower end of the 100k resistor. Drawing current through either of these tubes can vary the voltage drop across the 100k resistor. Any change there will be reflected at the grid of the 6AQ5, altering the voltage drop through it. The 100 mmf capacitor in parallel with the 820k resistor is a compensating capacitor that speeds up the response of the circuit. The grid circuit of the 6J Reset Control Inverter puts a minus 37 volt potential on the grid of this tube with respect to its cathode and keeps it cut off *except during reset time.* During reset time a positive input gate signal couples through the 1000 mmf capacitor and forces this tube to

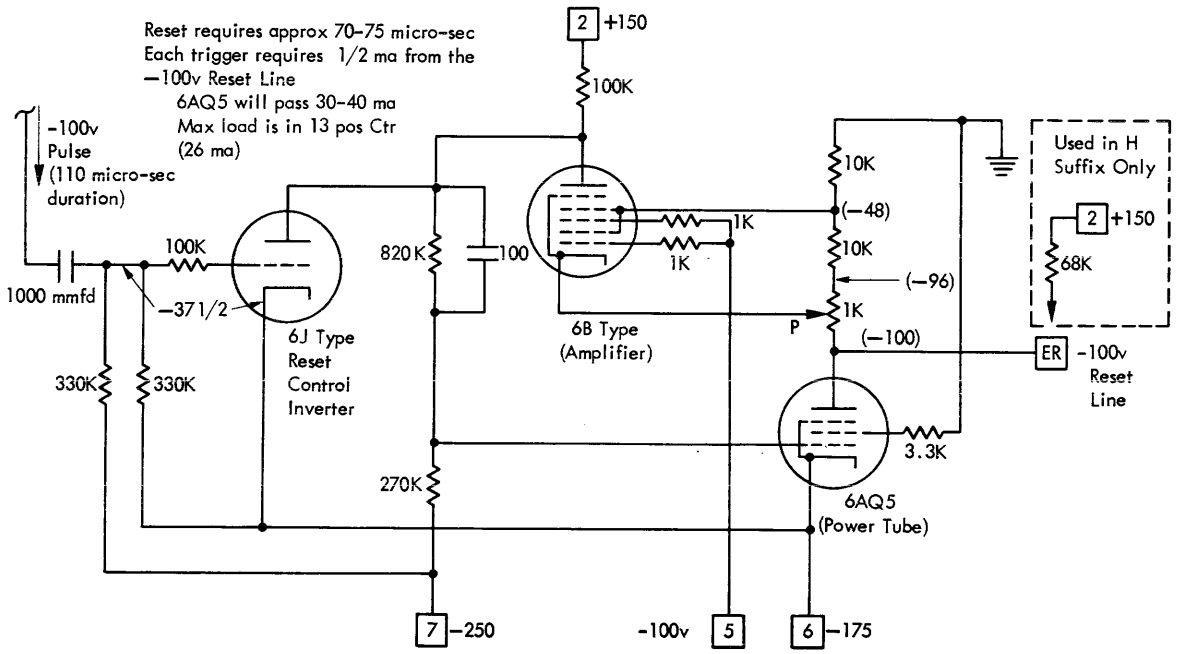

Figure 71. Schematic Diagram of the 604 Reset Circuit

conduct heavily. The plate of the 6J type tube will then drop to about minus 150 volts. This action shifts the grid potential of the 6AQ5 to minus 225 volts with respect to ground (50 volts more negative than its cathode) and cuts off electron flow through the tube. At such time the reset line will shift rapidly upward to zero and reset any triggers connected to it. In the 604H a 68k resistor is connected between the reset line and plus 150 volts as shown in the dotted box in Figure 71. This addition makes the reset line rise more rapidly and settle at plus ten volts (with normal loading from the triggers being controlled). While any individual trigger can be reset in five to ten microseconds, a group of coupled triggers being reset can produce a "ripple" of instability that might last for 70 microseconds. 110 microseconds allows a good safety factor. The 1000 mmf input capacitor to the 6J tube will couple an entire 110 microsecond reset gate. If a long duration gate is applied to this capacitor (such as a CB impulse from the 521), it will couple the shift for about 200 microseconds. This fact is used when reading into storage units from the 521: an electronic type of reset occurs under 521 control panel direction to clear the unit before the card holes are read.

The regulating action of the Amplifier tube is similar to that of the Control Inverter, but not as drastic; it will merely alter electron flow through the 6AQ5, not cut it off. Both control grids of the 6B tube are connected to the minus 100 volt power supply through 1000 ohm parasitic suppressor resistors. The 6B tube becomes a high gain amplifier with a fixed grid reference point. The screen grids are connected to a point between the Reset Line and ground that will make them about 50 volts positive with respect to the cathode.

The variable signal is applied to the *cathode* of this tube from the arm of a 1000 ohm potentiometer fed by the reset line. A screwdriver adjustment of the potentiometer arm permits manually setting the cathode potential. This in turn can set the normal level of the reset line to exactly match the minus 100 volt supply. Any variation of the 100 volt reset line from other influences will also be passed on to the cathode of the 6B Amplifier. Several examples will show how the circuit responds to these influences. The 6J Control Inverter is cut off and need not be considered in these descriptions.

If the Reset Line tends to become less negative (move toward zero volts), as might result from extra loading or from the weakening of the emission from the 6AQ5 cathode, the voltage at the arm of the 1000 ohm potentiometer will also become less negative. This makes the cathode of the 6B Amplifier move in a positive direction which has the same effect on the cathode to plate electron flow as making the grid more negative. That is, the 6B tube electron flow is reduced. The plate thus moves in a positive direction. This in turn couples to the 6AQ5 grid and makes it move in a positive direction. Electron flow through the 6AQ5 increases, making the plate (and the Reset Line attached to it) move negatively, balancing out almost completely the original change. The same type of control would occur for an attempted *negative* shift on the Reset Line, though the potential shift at each point in the loop would be in the opposite direction.

As a second example assume the reset line is found to be two volts more negative than the minus 100 volt power supply. This can be corrected by an adjustment of the potentiometer. A greater voltage drop through the 6AQ5 power tube is needed to let the Reset Line shift two volts positively. This will require a more negative 6AQ5 grid. A more negative potential at the grid can be obtained by increasing the electron flow through the 6B Amplifier tube (which will lower the potential at its plate). To increase the electron flow through the 6B Amplifier tube, the cathode will have to be made more negative by shifting the potentiometer arm downward (on Figure 71), nearer to the 6AQ5 plate. (When actually done in practice, a voltmeter is connected between the Reset Line and the minus 100 volt power supply. The 1000 ohm potentiometer is simply turned until the instrument reads zero, indicating balance.)

As a final example assume that the minus 100 volt power supply is shifted to minus 90 volts for testing purposes. The two control grids of the 6B Amplifier will also shift to minus 90 volts, a ten volt change in the positive direction. Electron flow through the 6B Amplifier will increase and the plate potential will drop. This negative shift at the plate will couple to the 6AQ5 grid and reduce electron flow through it, increasing its effective resistance, and letting the plate go nearer ground level. When the plate (and the Reset Line) gets near minus 90 volts, balance in the circuit is restored. Both the Reset Line and the altered output of the minus 100 volt supply are again nearly matched.

WIRING, SYSTEM, AND BLOCK DIAGRAM CONVENTIONS (G AND H)

Wiring Diagrams

A complete "fan fold" type wiring diagram is supplied with each 604 wired to the G suffix and earlier. All wiring behind the panels as well as within the units is shown on these diagrams. The location of the units on the wiring diagrams matches their physical location on the tube panels.

System Diagrams

The 604H uses a *System Diagram* type of wiring representation. Each pluggable unit (or separate section of most IN and DS units) is represented by a block. No wiring within a pluggable unit is shown on the *System* pages. Only the signal input and output wires are represented. To aid servicing, the unit pin numbers to which these leads connect are indicated inside the blocks. Pluggable units are grouped on *System* pages in logical arrangement (not by physical arrangement as mounted in the machine). Each logical operation is drawn on a separate page. Pages are individually replaceable in the *System Diagrams* books supplied with machines. Engineering Changes are easily reflected as installed by replacement of the proper pages. Each page contains a name, a logic page number, an IBM Part Number, and an Engineering Change (EC level) number, all of which are listed in the *System Diagrams* Table of Contents. Every time a change is to be made in the machine, a new logic page representing the new wiring will be supplied. The EC number of the new page will be changed though the name, page number, and IBM Part Number remain the same. **A new, corrected Table of Contents will also be supplied with each new logic page.** This will list the correct EC numbers of the replaced pages. An important point is that the Table of Contents has its own EC number *which is also changed each time a System page is changed.* To determine the Engineering Change level of a particular machine, it is therefore only necessary to look at the EC number of the Table of Contents. If a replacement logic page is ordered, both the IBM Part Number of the page AND the EC number must be given since the Part Number does not change with EC changes.

The importance of being familiar with the *System Diagram* type of circuit representation cannot be overemphasized. Most illustrations in the following pages of this manual will use the *System Diagrams* conventions. The Appendix to this manual contains diagrams of the wiring within each type of 604 pluggable unit. 604H *System Diagrams* books supplied with field machines also contain similar diagrams, though only for those units used in the H suffix machines. Once the operation of the individual units is understood it is possible to represent the unit by a simple block. Three sizes of blocks are used. The largest represents a full pluggable unit of any type. The middle size represents half of a pluggable unit (such as one triode section of an IN unit or CF unit, or one whole dual diode of a DS unit). The smallest block represents a quarter of a pluggable unit (a single diode section of a DS unit).

The type number of a pluggable unit is indicated inside the upper half of the block (such as PS12). The location of the unit in the tube panels is given inside the lower half of the block. The number in front of the hyphen indicates the panel. The number following the hyphen indicates the row. The letter indicates the column. If necessary, a subscript letter B or T will indicate the Bottom or the Top tube in a diode unit. A subscript 1 or 2 is used as needed to indicate the left or the right half of a tube. On *System Diagrams* pages the number preceding the hyphen and the hyphen itself are omitted since all units on a logic page generally will be in the same panel. If one page does contain units from two or more panels, this will be indicated by dashed lines separating those units located in one panel from those in another.

Wiring on *System Diagrams* is shown point to point as the information actually flows, therefore no unit may be shown more than once. Entries to a page come in at the top and left side. Exits leave by the bottom and right side. All components external to the pluggable units will be drawn on a *System* page or represented in a chart.

The remaining conventions used in the *System Diagrams* are best discussed under separate headings: Input, Reset, Output, and Voltage conventions.

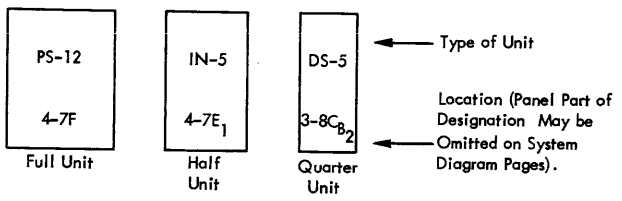

Figure 72. The Basic Blocks Used in System Diagrams

INPUT CONVENTIONS

Inputs to a block are identified by a small arrowhead pointing toward that block. A grid generally comes in below the middle of the left or right side of the block. A plate input (as with a Diode Switch) come in to the top of the block. A cathode input (as with a Triode or Diode Switch) comes in to the bottom of the block.

A capacitor coupled input will show a small capacitor symbol inside the block at the entry point. A tube biased at cutoff will have a minus sign near the capacitor; a tube normally conducting will have a plus symbol near the capacitor. Since most triggers are capacitor

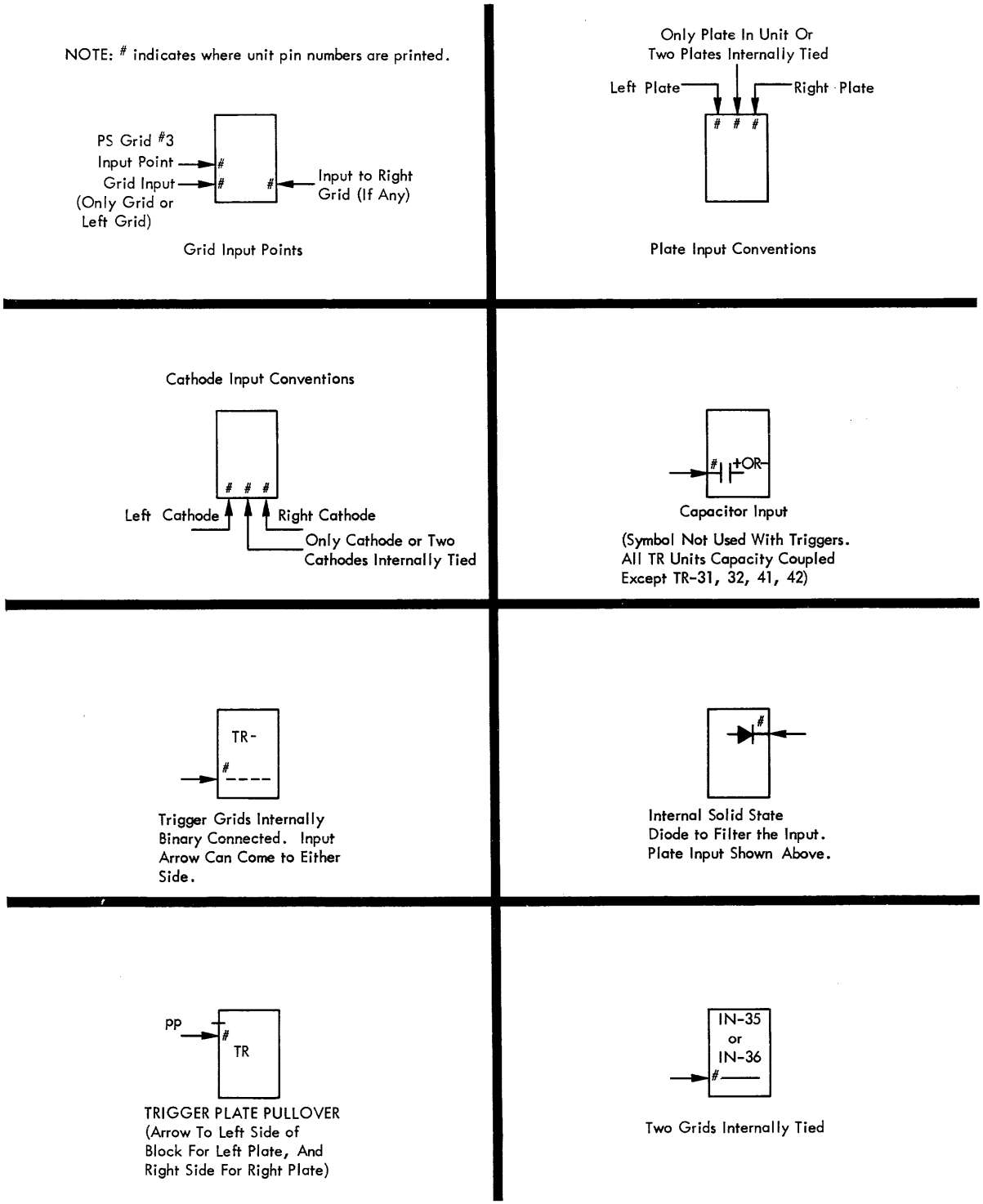

Figure 73. Input Conventions

input, it was decided to omit the capacitor symbol from trigger blocks. The trigger types TR 31, 32, 41, and 42, however, are direct or resistance input types. These exceptions will just have to be remembered. A help is that most direct input triggers have external resistors connected to their inputs. These will be drawn on the *System* pages and call attention to the special cases. A trigger which is *internally* connected in binary form (TR 6 or TR 21) has a dotted line across the block symbol at the grid input level.

Where an input is made to the plate of a trigger to cause flipping (Plate Pullover), an arrowhead will point inward to the plate pin of the block and the letters "PP" will generally be added outside the block.

An input to a unit through an internal solid state diode will show the diode inside the block at the input point. The diode will be drawn with correct cathode-anode orientation.

Where two grids of an inverter unit are internally connected together, the large block symbol will be used and a solid line will be drawn across the block at the grid level (IN 35 and IN 36).

RESET CONVENTIONS

The status in which a trigger is left after a reset operation is indicated by a small square in one of the bottom corners of the block. The reset box is drawn in the corner of whichever side is left in the conducting state by the reset action (*Left* ON, *Right* OFF). The type of reset is indicated by the letters inside the corner box: CR for Calculate time Reset, PR for Punch time Reset, UR for Unfinished program Reset, and ER for Electronic controlled Reset.

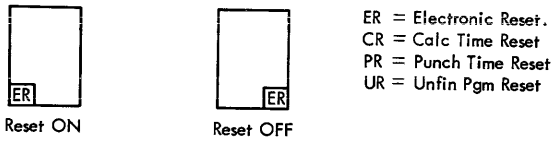

Figure 74. Trigger Reset Conventions

OUTPUT CONVENTION

Plate outputs come from the top area of the block with definite placements to indicate particular conditions of: 1) full plate output, 2) tapped plate output, and 3) direct plate connection to a unit not having an internal plate load resistor. The full plate output point is from the side of the block, somewhat lower than the tapped output. A small line cutting the side of the block above or below the output lead keys the location and prevents misinterpretation. If there is no indicating line, the output is assumed to be full. The direct plate connection to a unit not having a built-in load resistor is directly from the top of the block. A unit having two plates internally connected (the IN-2) uses the large block symbol and has a solid line across the block at the full plate output level.

Cathode outputs come from the lower area of the block. Units having built-in cathode load resistors have the output point on the side of the block. A direct connection to the cathode of a unit not having a built-in load resistor is indicated by a line directly from the bottom of the block. Thyratron units (TH) have their output taken from the bottom of the block.

Outputs taken from a unit through an internal solid state diode will show the diode inside the block at the output point. The diode will be drawn with correct symbolic orientation.

Outputs which are taken from the input network of a "master" unit to control separate "slave" units are drawn directly below the "master" input point. An arrowhead pointing away from the "master" block on such a line is occasionally used for clarity. Such arrowheads can be used on any output line where better understanding of the action will result.

VOLTAGE CONVENTIONS

Wherever a *signal voltage level* may be of interest, a small code letter in parentheses such as (c), (t), or (s) is placed alongside the line. The levels indicated by these letters are as follows:

No indication generally means a full, plate level output shift within the plus 150 volt to plus 50 volt range.

(t) indicates a tapped plate level output in the plus 150 volt to plus 100 volt range.

(c) indicates a cathode follower output in the plus 25 to minus 25 volt range.

(s) indicates a triode switch input level in the 0 volt to minus 40 volt range.

Special levels may be indicated by numbers of volts in parentheses.

A plus in front of the parentheses indicates the active signal is a plus shift. A minus in front of the parentheses indicates the active signal is a minus shift. These letter codes can be seen in Figure 75.

Tubes require power to function. A 6 volt AC filament lead and a ground return runs to each unit and is therefore not shown on *System Diagrams*. Negative DC po-

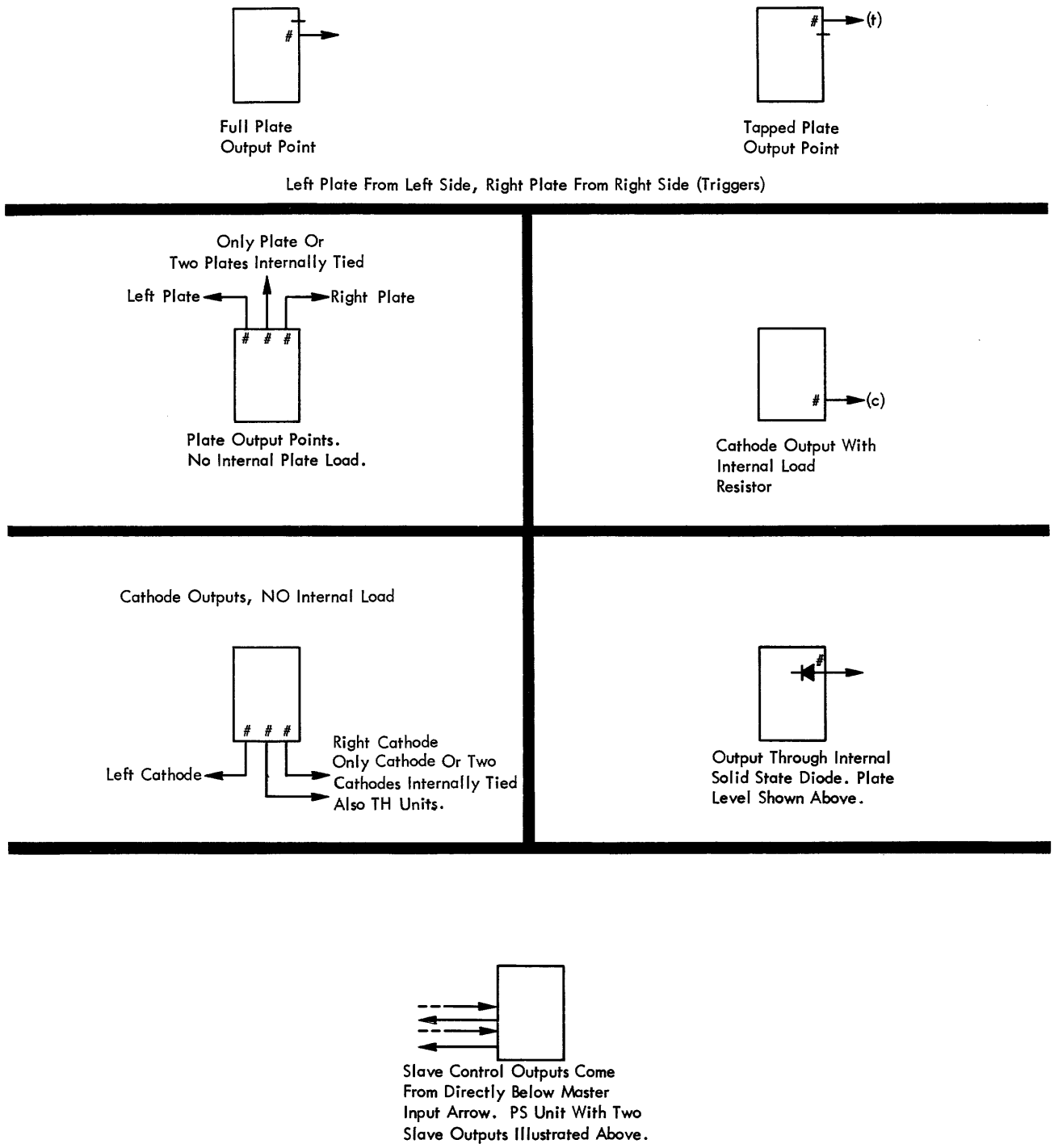

Figure 75. Output Conventions

tentials are not shown either since most units are supplied with minus 100 volts. The pluggable unit wiring diagrams show the connecting pins for the application of the minus 100 volts as well as the few units which use the minus 175 volts and minus 250 volts. Any *external* resistor or other circuit connecting to a voltage source will show that connection. A small square box with a number inside represents a connection to a power supply. The power supply code numbers are given near the start of this chapter and in the Appendix. The plus 75 volts applied to Pentagrid Switch tubes is understood and not shown. The same is true of the plus 150 applied to the screen grid of 6AQ5 tubes. PS-41 and PW-1 units used only in the Electronic Reset circuit are exceptions to

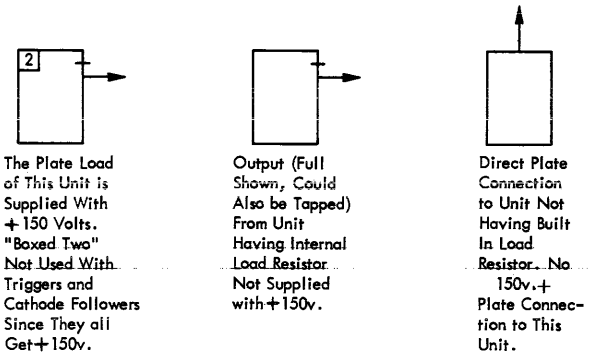

Figure 76. Unit Voltage Conventions

these screen supply levels and are so indicated in the unit wiring diagrams.

Plus 150 volts is applied to all Trigger units and Cathode Follower units and is therefore not shown. Other types of units will not always be directly connected to plus 150 volts. Slave units, inverter switches, power units, etc., can share a common plate load with another unit and get their plate potential through it. This is an important factor when trouble shooting. A convention has been adopted to indicate the actual wiring. Except for Triggers and Cathode Followers, units with plate loads supplied directly from the plus

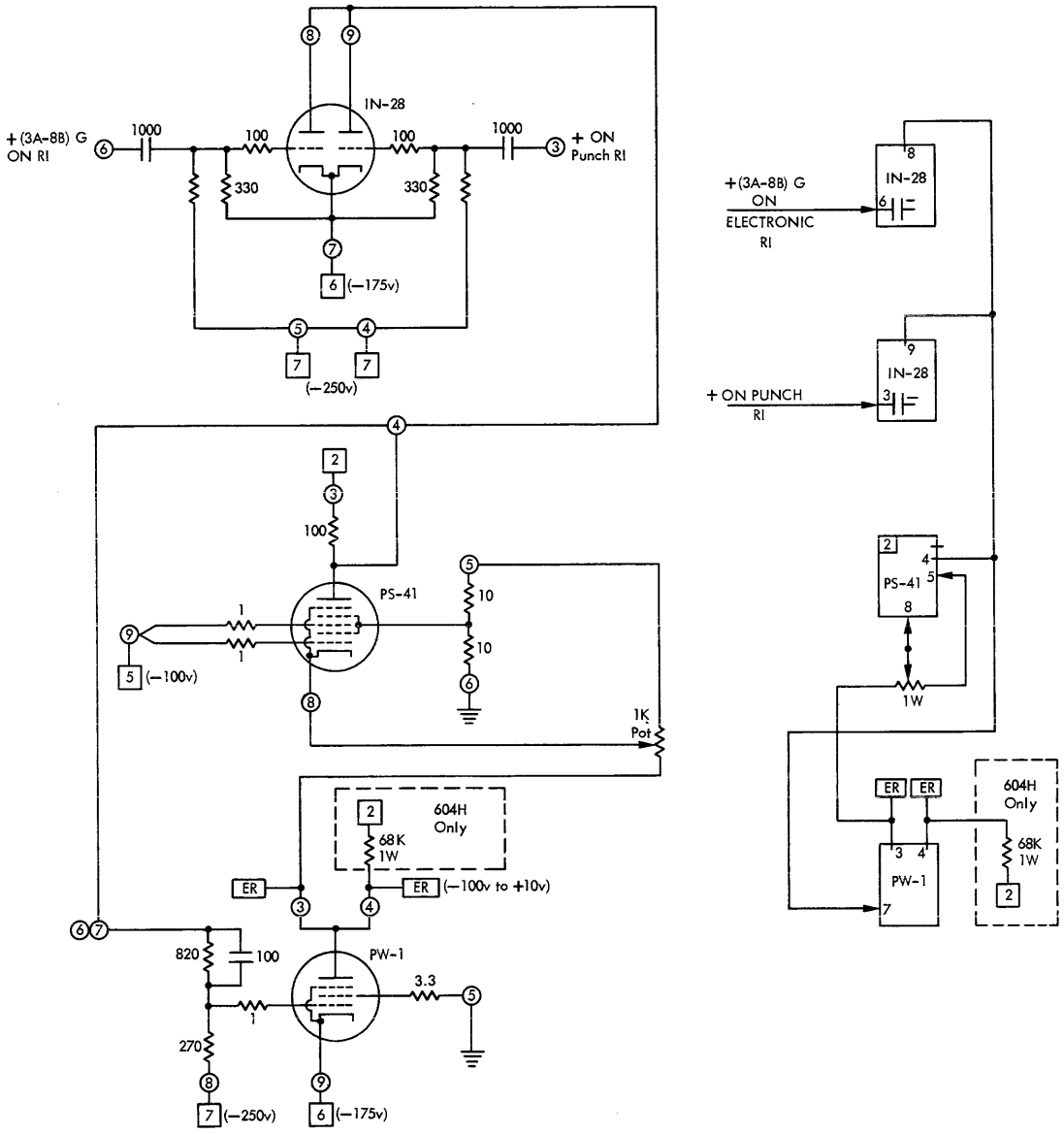

Figure 77. The Wiring Diagram Form and the System Diagrams Form of the Electronic Reset Circuit Shown Earlier in Schematic Form

150 volt power supply will have a "2" code located within a small square in the upper left hand corner of the unit block.

Figure 77 shows in two additional forms the same Electronic Reset circuit discussed earlier. The *Wiring Diagram* shows all the components arranged within the pluggable units and the numbering of the unit pins. This representation is similar to that used on the G suffix fan-fold print. For comparison the same circuit is also shown in *System Diagram* form such as used for the H suffix machines.

Block Diagrams

Block Diagrams were used to explain 604 circuits before the 604H *System Diagram* conventions were developed from them. Since Block Diagrams are a less rigidly conventionalized form of circuit representation, less circuit information is available from them. Such things as pin numbers, trigger resets, capacitor inputs, etc., are not always indicated. However, the flow of data and general circuit operation *is* indicated by Block Diagrams, and a number of 604 overall illustrations have been drawn in this form. The basic conventions and symbols used in Block Diagrams are shown in Figure 78.

This manual contains a few illustrations in a modified block diagram form using some of the system diagram elements which have proved valuable (such as power supply connection indications, the addition of pin numbers near the input and output points, etc).

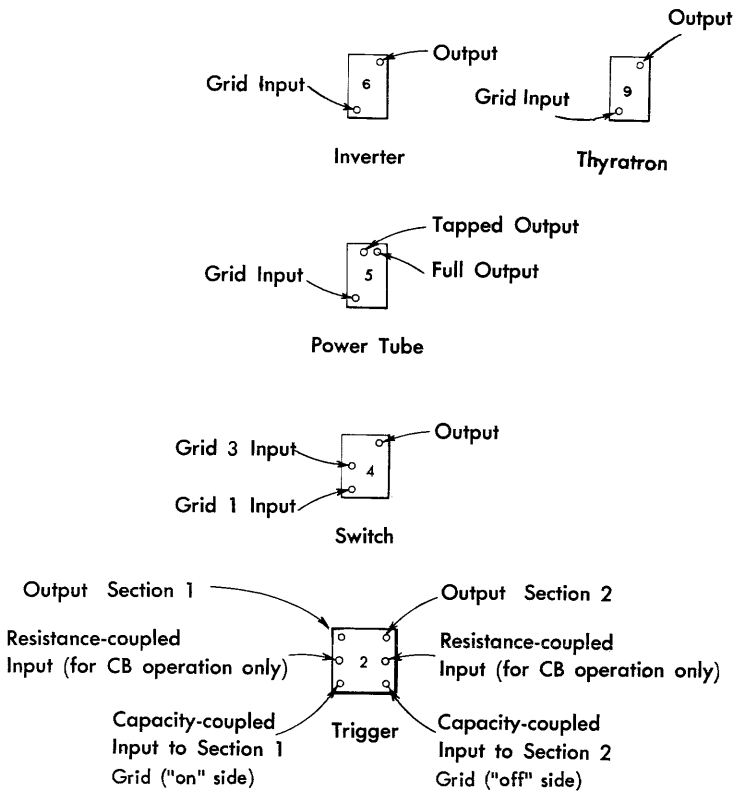

NOTE: Unit Pin Connection Numbers are Frequently Indicated Just Outside of Block Near Lead Drawn to Pin.

Figure 78. Block Diagram Symbols

Calculating Circuits

THIS CHAPTER explains the use of the electronic building blocks discussed in the preceding chapter. The circuits needed to accept a number group from a punched card, move that number from place to place within the calculator, add it, subtract it, and punch out a result will be covered here. The following chapter will discuss the extra circuits of multiplication, division, and special operations. Both G and H suffix circuits are covered in detail with special reference to F suffix differences where the variation is large. An over-all discussion of objectives for each function precedes the circuit details.

ELECTRONIC STORAGE (G & H)

A NUMBER can be represented by a handful of pebbles, some graphite marks on paper, a hole in a card, or the rotational position of a counter wheel. Each of these methods has particular characteristics which make it useful in a particular application. The workings of the 604 demand still another, electronic form of number representation. The basic requirement of any numbering system is that each digit to be represented must have a unique factor not duplicated by any other digit. In an electronic system we could, for example, have nine trigger units arranged in a row. If the first trigger only were ON, the number 1 would be represented. The second trigger only would be ON to represent a 2, and so on. A zero would be represented by having no triggers ON. Such a system is practical but uneconomical. The 604 uses only four trigger units to represent any single digit, zero through nine. This means that some digits will be represented by two or more triggers in the ON position, but this is no disadvantage in 604 usage.

The 604 is a pulse machine, and numbers are entered into storage units as groups of pulses. The number five can be represented by five pulses or by the action produced by these five pulses. The digit storage assembly is therefore designed as a pulse counter.

Figure 79 shows four binary coupled counters arranged in series. Input pulses are applied to the first trigger only. Each time a trigger flips, 100 volt shifts occur at its plates. A tapped load resistor on the right plate allows 40 volts of this shift to be fed to the next stage. A negative shift from a right plate (produced when a trigger goes OFF) will cause the next stage trigger to flip, whereas (due to 604 trigger design) a positive shift of 40 volts amplitude has no effect. Every second negative shift applied to a trigger unit will return it to its original status. With the four trigger storage assembly now being discussed there are sixteen unique trigger status combinations that can be obtained. It will take sixteen pulses to run the assembly through its combinations and back to its starting point.

The triggers are all Electronic Reset OFF before a pulse group is applied to the input point. The leading edge of the first negative input pulse will turn the first trigger on. The second negative pulse will turn the first trigger off, producing a negative shift at the right plate which couples to the second trigger and turns it on.

The third negative pulse applied to the input point turns the first trigger ON again. The fourth negative input pulse will turn off the first trigger and produce a negative shift output from its right plate. This negative shift couples to the second trigger and flips it from ON to OFF, producing a negative shift at the right plate of the second trigger. This negative shift from the second trigger feeds to the third trigger and turns it ON. A fifth negative pulse applied to the input point will turn the number one trigger ON again, etc. After the fifteenth input pulse all four triggers will be ON. The sixteenth pulse will turn off the first trigger, which will turn off the second trigger, which will turn off the third trigger, which will turn off the fourth trigger, returning the assembly to zero. The graphs and the chart of Figure 79 show the status of each trigger in the assembly after each input pulse has had its effect. Notice that if we assign digit values of one, two, four and eight to the successive triggers (each value twice the one before it), the sum of these digit values will always equal the number of pulses applied. This one, two, four and eight value designation also provides an excellent way of identifying the triggers in the assembly (rather than the first trigger, second trigger, third trigger, and fourth

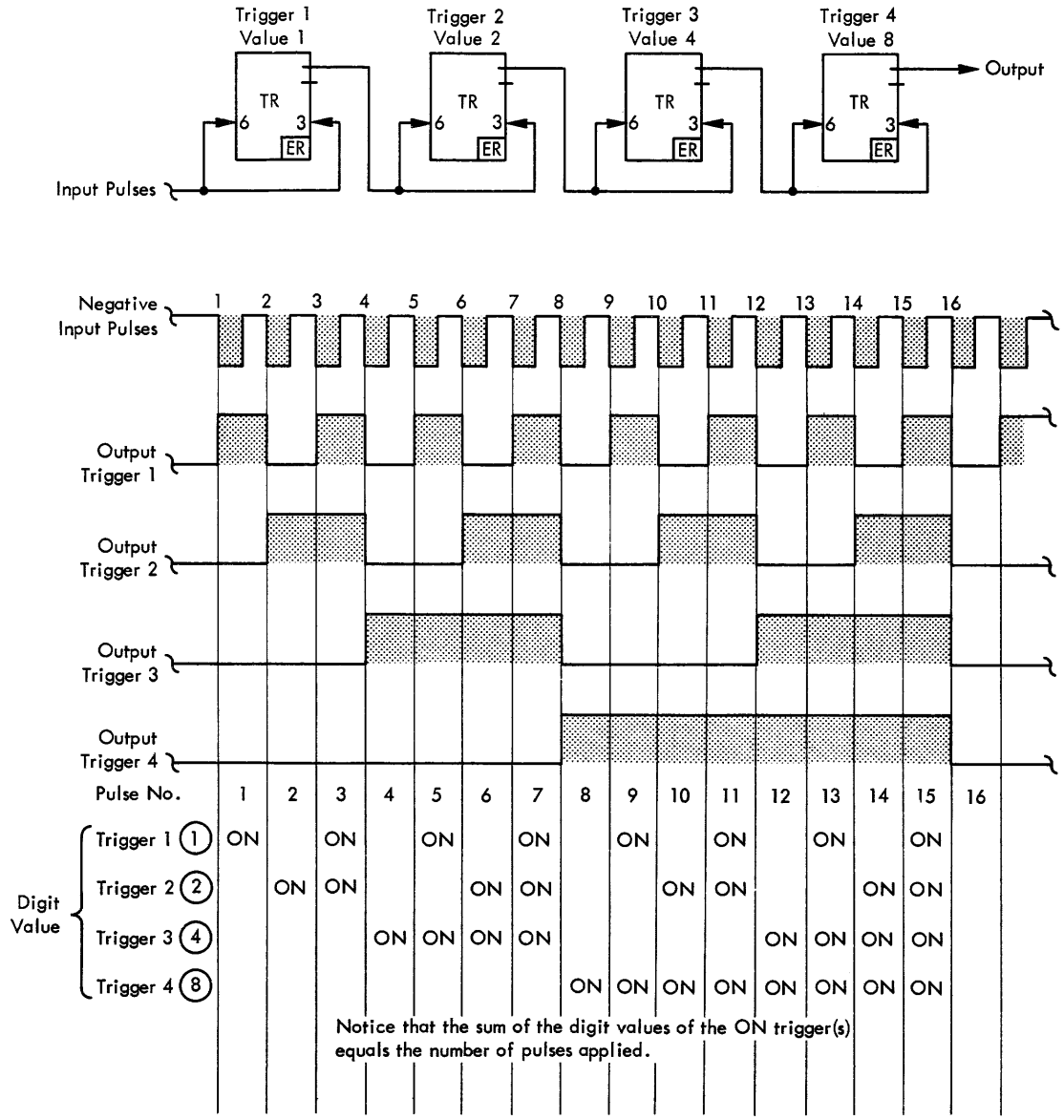

Figure 79. Operation of the Binary Storage Assembly

trigger). This identification of triggers by value will generally be used throughout the remainder of this manual when referring to storage assemblies.

To simplify the design of other circuits in the machine, it is desirable that a storage assembly have only ten unique states rather than the sixteen of the preceding circuit. That is, input pulses should progress the assembly step by step from zero to nine and then return it to zero with the tenth pulse. This corresponds to the decimal system used in manual computations and simplifies 604 read in, read out, counter, and carry circuits. A modification of the basic binary counter just discussed converts it to a ten state base. This ten base assembly is the type actually used in the 604 to store digits.

Two forms of Modified Binary Assemblies have been used in the 604. The H suffix machine uses a solid state diode in a tens limiting arrangement while machines of the G suffix and earlier type use a blocking tube (one triode of an Inverter unit).

These circuits will be discussed separately, but their objectives are identical:

1. When the value one and eight triggers are both on (storing a nine) the next pulse must turn them both off.

2. The value two trigger must be prevented from flipping on when the value one trigger goes off at this time.

THE MODIFIED BINARY ASSEMBLY USING A SOLID STATE DIODE (H SUFFIX)

Figure 80 shows the H suffix type of storage assembly in block diagram and in circuit diagram form. Graphs and a chart of the pulse by pulse operation are also included to aid understanding this important circuit.

The first modification objective (turning off the one and *eight* triggers with the tenth input pulse) is attained by not using the binary connection for the value eight trigger. Instead, its left grid is driven from the tapped

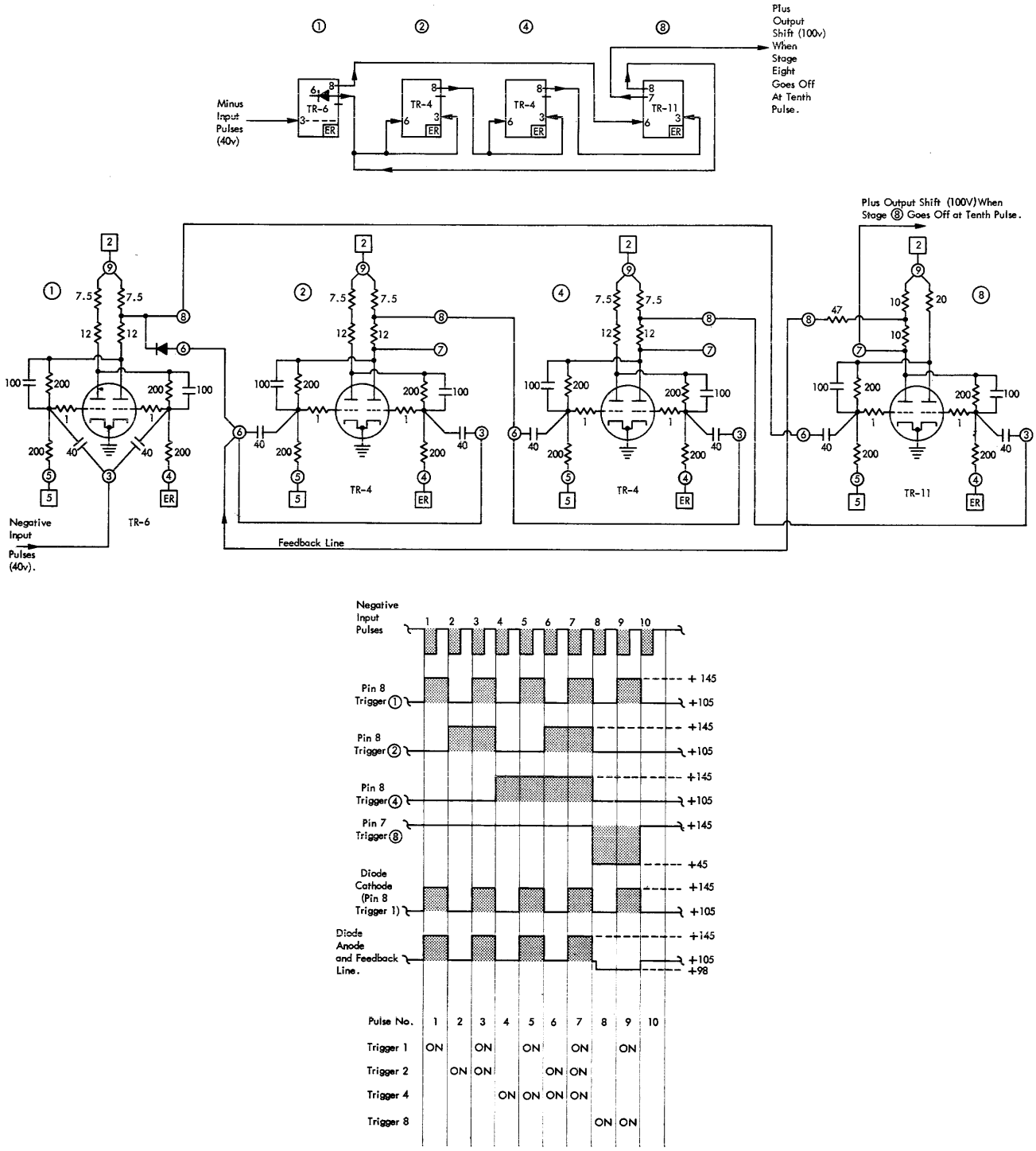

Figure 80. The Modified Binary Pulse Storage Assembly Using a Solid State Diode

output of the right plate of the value one trigger. Whenever the value one trigger goes off, a negative shift is sent to the value eight trigger to turn it off. If the value eight trigger is already OFF (as it is except when a digit eight or nine is stored), the shifts on its left grid have no effect.

The second objective is to prevent the value two trigger from coming on when the tenth input pulse turns off the value one and eight triggers. The circuit diagram shows more clearly than the block diagram how this is accomplished. The key items are the action of the solid state diode in series with pin six of the value one trigger and the 47,000 ohm resistor in series with pin 8 of the value eight trigger. This circuit provides a feedback voltage level from the value eight trigger to the value one diode. As long as the value eight trigger is OFF, the 47,000 ohm resistor within it will be receiving a potential of about plus 145 volts from the junction of the two 10,000 ohm left plate load resistors. This potential is felt at the anode of the diode (pin 6 of the value one trigger) and makes it act as a virtual short circuit. The negative shifts from the right plate of the value one trigger (whenever it goes off) are thus felt at pin six and the input of the value two trigger *so long as the value eight trigger is* OFF. The Modified Binary assembly up through the eighth input pulse works just like the sixteens base assembly previously discussed, except that shifts sent to the value two trigger pass through a diode. When the eighth input pulse turns on the value eight trigger, an important action results. The value eight left plate is now at only plus 45 (or less) volts, and the mid-point of the two 10,000 ohm resistors is near 98 volts rather than the former 145 volts. Whenever the cathode of the diode in the value one trigger goes more positive than this 98 volt potential applied to its anode, the diode becomes an effective open circuit. This happens when the ninth input pulse turns on the value one trigger. The right plate rises to plus 145 volts, and the cathode of the diode rises to approximately the same value. The diode anode, having only plus 98 volts available from the feedback line, DOES NOT FOLLOW THIS PLUS SHIFT; and since it does not follow the plus shift up, it cannot pass the negative shift down that results when the tenth pulse turns off the value one trigger. The tenth input pulse is thus not felt at the value two trigger, which stays OFF, accomplishing our objective.

Two side effects are worth examining once the basic operation is understood. Several microseconds after the tenth pulse has turned off the value one trigger and fed a negative shift to the value eight trigger, the value eight trigger will have finished its flipping action to the OFF position. This makes the right end of the 47,000 ohm resistor (Figure 80) return to plus 145 volts. The feedback line tries at this time to go to plus 145 volts also, but the diode cathode at the now OFF value one trigger is at plus 105 volts (a more negative level) and emits electrons to hold the line at this lower level. The 47,000 ohm resistor is necessary in such instances to act as a cushion or buffer. The second side effect to note occurs with the eighth input pulse and concerns a lowering of the level of the feedback line to plus 98 volts. This is shown on the graph of the diode anode and feedback line, Figure 80. Between the seventh and eighth pulses the storage assembly is setting at seven with the value one, two, and four triggers ON. The eighth input pulse turns off the value one trigger, dropping the voltage level at pins 8 and 6 to plus 105 volts. This shift turns off the value two trigger, dropping its pin 8 to plus 105 volts. This shift in turn flips off the value four trigger, dropping its pin 8 to plus 105 volts, which in turn flips on the value eight trigger. The mid-point of the two 10,000 ohm left plate load resistors drops to plus 98 volts. This is a less positive level than that at the diode cathode, so the diode becomes an open circuit and permits the feedback line to drop to plus 98 volts. This 7 volt further negative shift is felt at the input of the value two trigger but has no effect; the amplitude is too small (and follows too closely the initial shift applied to the value two trigger) to cause further action.

THE MODIFIED BINARY ASSEMBLY USING A BLOCKING TUBE (G SUFFIX AND EARLIER)

Figure 81 shows in block diagram and circuit diagram form the blocking tube type of Modified Binary Storage Assembly. To permit the value eight trigger to be turned off with the tenth input pulse, a changed, non-binary connection is made in its circuits. Notice that whenever the number one trigger goes off, the negative shift at its right plate is directed to the left grid of the value eight trigger. If this trigger is OFF (as it is except with an eight or a nine stored), these shifts on the left grid have no effect, but when the value eight trigger is ON the negative shift *will* turn it off. With a nine in the storage assembly the value one and value eight triggers will be ON. The tenth pulse then will turn off the value one trigger which will feed a negative shift to the value eight trigger to turn it off. The assembly will be restored to zero through this action if a means can be devised to keep the value two trigger from coming on as it usually

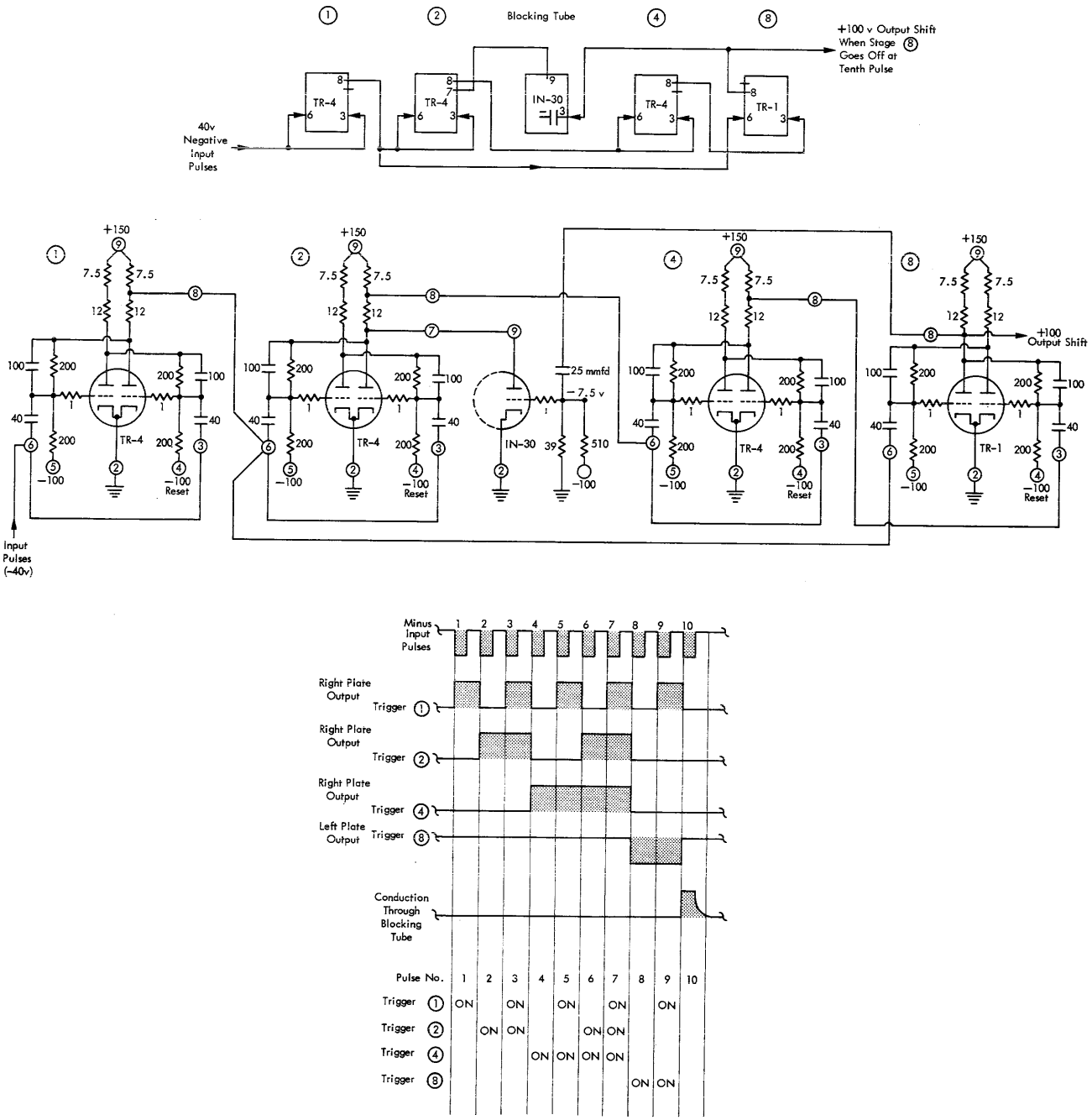

Figure 81. The Modified Pulse Storage Assembly Using a Blocking Tube

does when the value one trigger goes off. The blocking tube provides this second action.

The blocking tube is half of an IN unit. It has a capacitor input. The values of the grid circuit resistors rest the grid at minus 7.5 volts, just below cutoff. Its plate is connected directly to the right plate of the value two trigger, exactly as was discussed in the Plate Pull-over method of flipping a trigger in the preceding chapter. As will be seen, in this case the action can best be called "plate holddown." The blocking tube is cut off and has no effect until the tenth input pulse. The value one and eight triggers are ON after the ninth input pulse. The tenth pulse will flip off the value one trigger. The resulting negative shift at the tapped output of the right plate will feed to both the value two and the value eight triggers. The value two trigger will *try* to flip on, and the value eight trigger *will* flip off. The value eight

trigger, not being binary connected, is much more responsive and swift, and therefore flips several microseconds before the value two trigger could. As soon as the value eight trigger flips off, the resulting postive shift at its left plate couples through the input capacitor to the blocking tube and forces the tube to conduct heavily. This electron flow through the blocking tube will hold the right plate of the value two trigger down, and unless that plate does rise, the trigger cannot flip. By the time the 25 mmf blocking tube input capacitor has stopped coupling the positive shift at its input and permitted the tube to return to cutoff (about 7 microseconds), the value two trigger input capacitors will have stopped coupling their inputs and the trigger will no longer be trying to flip. The storage assembly thus returns to zero on the tenth input pulse.

The circuit diagram and the graphs of Figure 81 explain the action of this important assembly on a pulse by pulse basis.

Uses for the Modified Binary Storage Assemblies (G & H)

The storage assembly just discussed is capable of retaining only one digit value at a time. If a three digit number group is to be stored, three such assemblies "side by side" will be needed. Five digit Storage Units use five such assemblies each, and the thirteen position Counter uses thirteen of them. An important point to note about these assemblies is that an output shift is obtainable whenever the assembly rolls from nine back to zero. With an assembly already holding a digit, the number of input pulses that must be applied to get the output shift will depend on the original digit stored. This is a method used by the machine to determine the original stored number. Along this same line, note that sending ten input pulses to any storage assembly will roll it around and back to its original position. Except in the Counter, there is no carrying into the next order storage assembly when the lower order assembly goes from nine to zero. Carry in the counter is controllable; we do carry when adding or subtracting, but not when reading out. More detailed discussions of these operations will appear on following pages, but it should be remembered that the Modified Binary Storage Assembly makes up the backbone of the digital circuits within the 604. An understanding of their operation is therefore important. The physical location of the pluggable units making up these storage assemblies can be seen in the Appendix on the Neon Location Chart for the proper (G or H) machine.

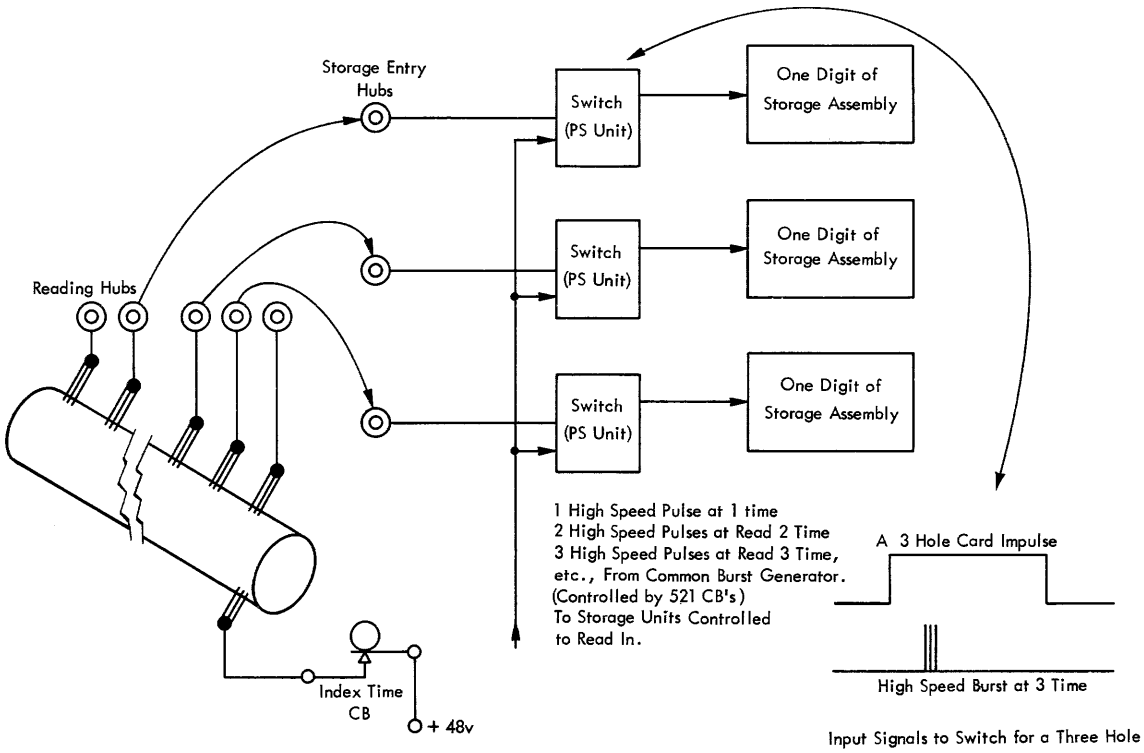

Figure 82. The H Suffix Burst System Read-In Logic Showing a Three Position Storage Unit

CARD TO STORAGE READ-IN (G & H)

GETTING THE DIGITS punched in a card into an electronic storage assembly is primarily a problem of conversion or translation. The physical hole in the card is read by a brush and converted into an electrical impulse. The time at which this impulse is available varies, depending upon the digit represented by the location of the hole. This time variation must be converted into an electronic condition where enough pulses are applied to a storage assembly to advance it to the desired digit as dictated by the original card hole. Each desired card brush must control one individual storage assembly.

Two approaches have been used to provide the needed conversion: the burst system and the pulse per point system. The H suffix machines use a pulse generator that provides a high speed burst of pulses for each machine reading cycle point. The number of pulses in each burst corresponds to the digital value of any holes read at that time. A five pulse burst occurs at five reading time, an eight pulse burst at eight time, etc. The total time taken for even a nine pulse burst at nine time is only 720 microseconds, whereas the CB impulse through the card hole lasts for longer than 8,000 microseconds (8 milliseconds). As can be seen, these timings are not at all close or critical. One electronic switch per digit storage assembly with one input fed from the burst generator and the other input fed from the card brush, permits only the one, correct burst to reach the storage assembly. Figure 82 gives the basic logic layout for the Burst System.

The Pulse Per Point System is used in machines wired to the G suffix print and earlier. One single pulse is generated midway through each cycle point, starting at five teeth after zero on the 521 index. These pulses are allowed to reach the storage assembly until a hole is read from the card column wired to that particular position entry. This card impulse, at the line of index, flips a trigger controlling an electronic switch and prevents any further half-time impulses from reaching the storage position. Since the cards are read twelve edge first, this system works quite directly. As an example we can take a three hole in the card. At "half after zero" (5 teeth past zero) the first pulse enters. At half after one the second pulse enters. At half after two the third pulse enters. At three time the Read-In Control Trigger for this position is flipped by the hole impulse. The common pulses generated at half after three, half after four, etc., through half after nine, are not allowed to reach this particular storage assembly position. The result is that for the three, or any other number, a number of

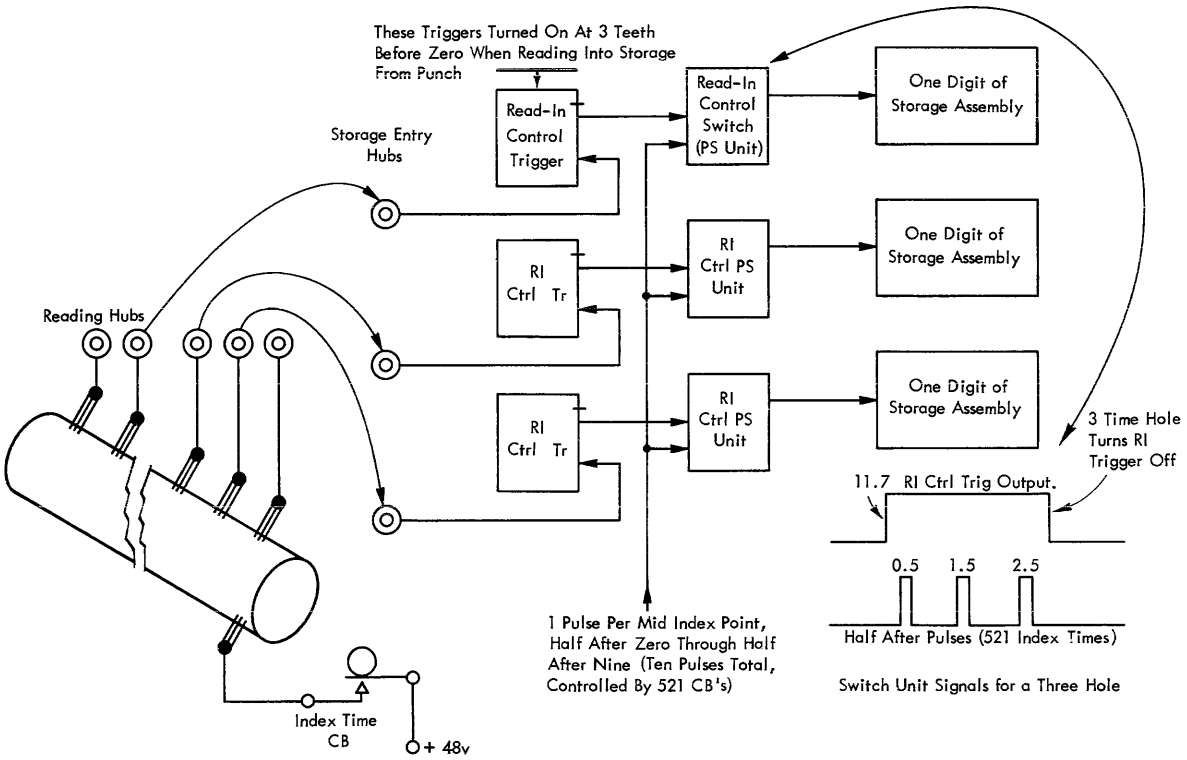

Figure 83. The Logic of the Pulse Per Point Read-In System Used in the G Suffix and Earlier

pulses corresponding to the hole in the card is permitted to enter the storage position. A zero hole flips off the Read-In Control Trigger before any half-after pulses have been generated. A blank column on the other hand, does not flip off the Read-In Control trigger; this permits the full ten "half-after" pulses to spin the storage assembly clear around and back to zero. A logic diagram for this Pulse Per Point System is shown in Figure 83.

These two systems will be discussed separately in the paragraphs to follow.

Burst System Read-In (H Suffix)

This system requires three areas of function as indicated on Figure 84: 1) A single "burst generator" is needed for the machine to supply groups of high speed pulses whose number corresponds to the hole being read. This "burst generator" is called the Punch Read-In Timer. 2) A Punch Read-In Control is needed for each Storage Unit (FS 4, GS 3, etc.) *as a unit.* The Read-In Control Trigger and Inverter Switch allows the read-in *function* of a storage unit to be controlled by one wire on the 521 control panel. This also causes the Storage Unit to reset to zero before the digits are read into it 3) Each digit position within a Storage Unit must have its own brush entry control switch to allow any desired card column to be stored in any storage assembly position.

PUNCH READ-IN TIMER (BURST GENERATOR)

The punch read-in timer contains a modified binary assembly similar to those in any 604 storage unit. Special reset controls are added, however. As can be seen in Figure 84, the read-in timer triggers are Calculate time Reset OFF. At five teeth before each 521 index line, 1 through 9, certain triggers are CB reset ON so the value in the assembly is the tens compliment of the number to be read in at the next line of index. That is, by removing minus 100 volts from pin 5 of the particular triggers the assembly is reset to 9 at five teeth before 1, reset to 8 at five teeth before 2, etc. Electronic pulses at the rate of 12,500 per second are fed to the input of the read-in timer triggers and to the line feeding each Storage Unit Punch Read-In Control Switch in the machine. When the read-in timer goes from 9 to 0, the resultant output shift flips the A pulse Control Trigger and cuts off further pulses to the timer and Storage Units. Thus by resetting the timer to 8 prior to reading any value 2 holes in the card it will take two high speed pulses to advance the timer to zero and stop further pulses within that burst. The same type of operation occurs for any digit. The burst is controlled by the Read-In Timer Control Trigger to start at 1 tooth past the line of index, thus giving the reading brushes sufficient opportunity to properly condition the number three grid of the Punch Read-In Pentagrid Switches. Brush impulses last from the line of index to 3 teeth past.

The composite and actual circuit for punch read-in to FS-4 is shown in Figure 84. The punch read-in timer will also be found on *System Diagram* page 1-0401, and Factor Storage 4 on page 3-0102.

The 604 multivibrator normally supplies "A" pulses at 50,000 per second (50 kc) as long as power is on. The frequency divider triggers reduce this to 12.5 kc for use by the circuit solely to increase circuit reliability. The constant 50 kc "A" pulses are applied to grid 3 of the "A" pulse mixer. Grid 1 controls whether these pulses get through the switch to drive the timer, and grid 1 in turn is controlled by the Read-In Timer Control Trigger (a type TR-31 which responds to positive input shifts). 521 CB's turn this trigger on at one tooth past each index 1 through 9, and reset it off five teeth later. 521 CB's are not synchronized with the 604 multivibrator and "A" pulses. If the output of the "A" pulse control trigger were used directly to drive the Read-In Timer Triggers and the Storage Units, there would remain the possibility of read-in errors. If the 521 CB's should turn on the RI Timer Trigger part way through an "A" pulse, this shortened pulse might advance the RI Timer Triggers but not the Storage Units, or vice versa, causing a count difference. The frequency divider triggers provide a buffer; any short pulse either will or will not advance the divider a step, but no read-in failures result in either event because only the output of the second divider trigger is used. Four input pulses are necessary to get a useful shift from this second divider trigger.

OBJECTIVE: Supply the correct number of high-speed pulses, 7 at 7 time on the punch index. These pulses are fed to the Storage Units for punch read-in operations. Refer to Figure 84.

1. Reset timer to 3 by P47 and P51 at 6.5 time.
2. RI timer control trigger turned on by P28 at 7.1.
3. The A pulse control trigger is turned on at 7.1.
4. Grid 1 of the A pulse mixer is conditioned positive.
5. +A (c) pulses fed to grid 2 of A pulse mixer.
6. 6T turned on by first A pulse through 3Z.
7. 6T turned off by second A pulse through 3Z.
8. 5T turned on when 6T turns off.
9. Positive output of 5T through 6S to Storage Units (first pulse).
10. 6T turned on by third A pulse.
11. 6T turned off by fourth A pulse.

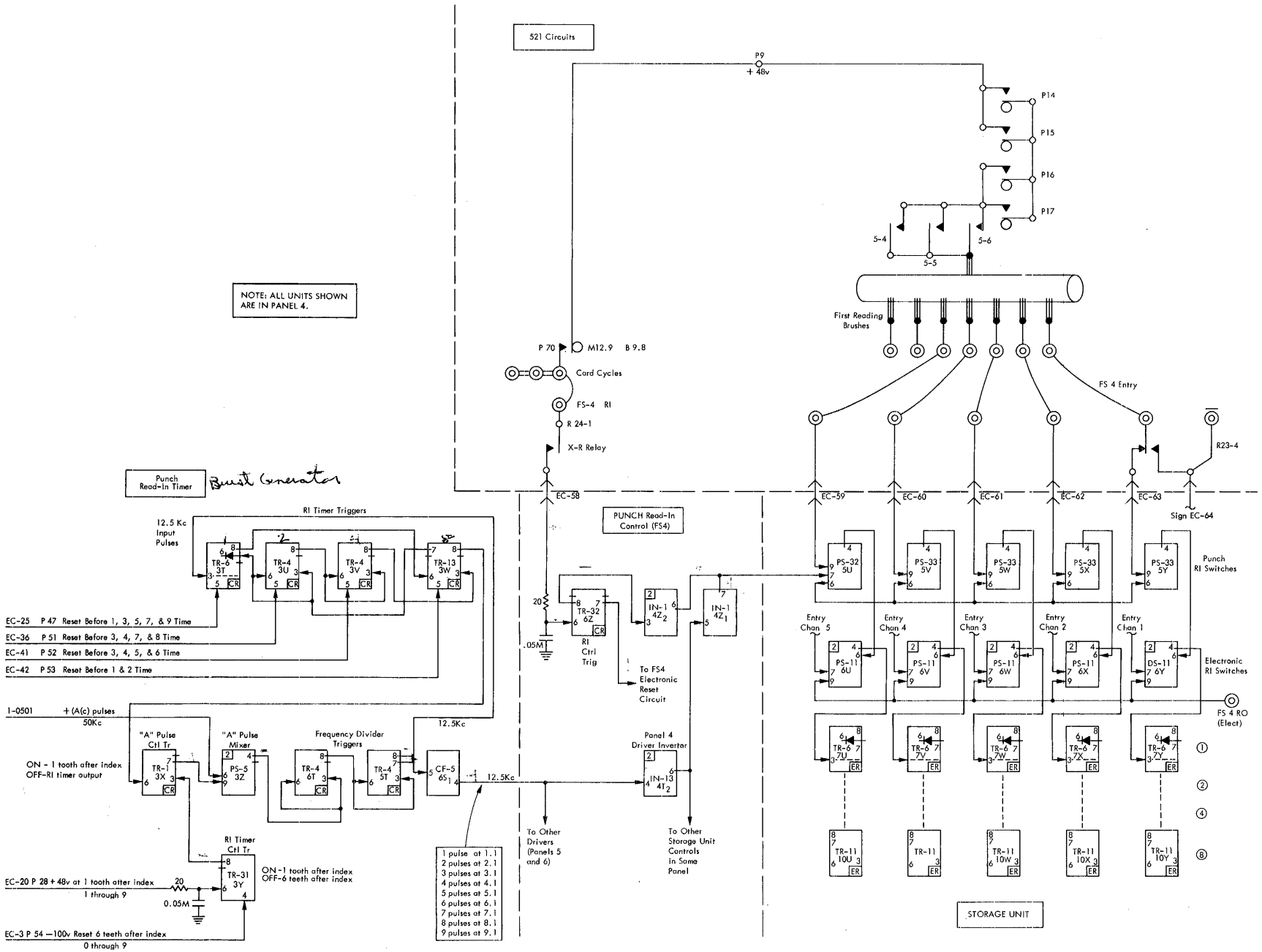

Figure 84. Burst System Punch Read-In to FS-4 (H Suffix)

12. 5T turned off when 6T turns off.

13. Negative output from 5T advances timer to 4.

14. Every second A pulse will turn 6T from on to off.

15. When 6T flips from on to off, 5T will flip.

16. Each time 5T turns on, a pulse is fed to the Storage Units.

17. Each time 5T turns off, a pulse is fed to the read-in timer.

18. When the timer has advanced to 9, the Storage Unit will have received six read-in pulses.

19. The seventh time 5T turns on, the seventh read-in pulse will feed to the Storage Units.

20. The seventh time 5T turns off the timer will advance from 9 to 0.

21. The A pulse control trigger will turn off by negative output from 3W.

22. The A pulse mixer cannot conduct any more A pulses.

23. RI timer control trigger reset by P54 at 7.6.

PUNCH READ-IN CONTROL OF STORAGE UNIT

The bursts of pulses generated by the Read-In Timer must only be allowed to reach the Punch Read-In Switches of Storage Units being told to read-in on any particular card cycle. A means must also be provided to erase or reset any figures stored within a unit prior to reading in any new figures. The Read-In Control trigger drives an inverter switch which feeds number one grids of the Punch RI PS Units. An output from the Read-In control trigger of any Storage Unit also feeds its own particular Electronic Reset circuit (page 3-0301 for Factor Storage Resets, page 3-0302 for General Storage Resets, or page 5-0201 for MQ Unit Reset).

OBJECTIVE: Reset Storage Unit.

1. RI control trigger turned on at 12.9 through P70, the control panel wire, and R24.

2. Plus shift from pin 7 of RI control trigger feeds to Electronic Reset Circuit, page 3-0301 for FS4. Capacitor input at $7Z_2$ couples resetting condition for 200 microseconds. All storage assemblies in the Storage Unit reset to zero.

An X impulse can be used instead of the Card Cycles impulse to control a Storage Unit Read-In. A 12 punch must not be used even though it can get through the XR relay. 12 time is still within calculating time, and will cause premature resetting.

STORAGE POSITIONAL READ-IN CONTROL

As previously explained, punch read-in is controlled by punch control panel wiring. Note in Figure 84 that the punch read-in switches and the electronic read-in switches are in parallel to feed each storage position. Therefore, the two switches must share a load resistor to send a tapped negative signal to the first stage trigger of each storage position. The resistor is physically located in the electronic read-in switch. It is necessary to show these switches even though they are not an integral part of punch read-in operations.

The inverter located at $4T_2$ is part of the Storage Unit circuit. There is one IN-13 unit in each panel of storage to feed read-in pulses to the four Storage Units located in that panel. There is a functionally similar unit to feed the MQ Unit.

OBJECTIVE: Store the value of the punched hole in the Storage Unit.

1. Minus level from pin 8 of the ON RI control trigger (Figure 84) holds $4Z_2$ half of Inverter Switch cut off.

2. One tooth after each index point, 1 through 9, positive output pulse bursts will flow from Read-In Timer cathode follower, $6S_1$.

3. The panel driver inverter feeds these as negative pulse bursts to the other grid of the Inverter Switch, $4Z_1$.

4. The positive pulse bursts from the inverter switch are fed to the number 1 grids of the punch read-in switches. 5U is the master PS unit; 5V, W, X, and Y are grid 1 slaves.

5. The grid 3 of a punch read-in switch will be positive from a line of index to three teeth after when the brush feeding it reads a card hole.

6. The negative pulse burst from the punch read-in switch while a hole is read will advance the storage assembly. The resulting value in the assembly will correspond to the value of the card hole.

STORAGE UNIT, SIGN READ-IN

An X or 12 punch over the units card column, or any punch impulse 12 through 9 into the storage entry minus hub, informs the 604 that the number group is to be considered as negative.

OBJECTIVE: (Page 3-0102.) To turn on the sign trigger of FS4 when the figure punched in the card is negative.

1. Punch RI control trigger on as above.

2. Punch sign entry trigger on from X or 12 punch over units position or any punch from sign entry through EC-64.

3. Positive output from inverter switch at 3R conditions pin 9 of 5Z.

4. +(c) at 9.5 from 3-0101 to pin 6 causes 5Z to conduct.

5. Sign trigger at 11T turned on by plate pull over.

Pulse Per Point Read-In (G Suffix)

Figure 85 is a block diagram of the circuits needed to punch read-in to Factor Storage 4 by the "pulse per point" system used with G suffix and earlier machines. Three functions must be performed by this system: 1) A single read-in pulse per point generator is needed. One serves the entire machine. 2) A punch read-in and reset control is needed for *each* Storage Unit (FS4, GS3, etc.) *as a unit.* A single wire on the 521 control panel to the storage RI hub thus resets the Storage Unit and prepares the read-in circuits to accept data from the card. 3) Each digit position within the Storage Unit must have a separate entry control. These are the Read-In Triggers. A card hole impulse sent to a Storage Entry hub will flip its read-in trigger and prevent further read-in pulses from reaching that position's storage assembly. These three functional areas are labeled on Figure 85.

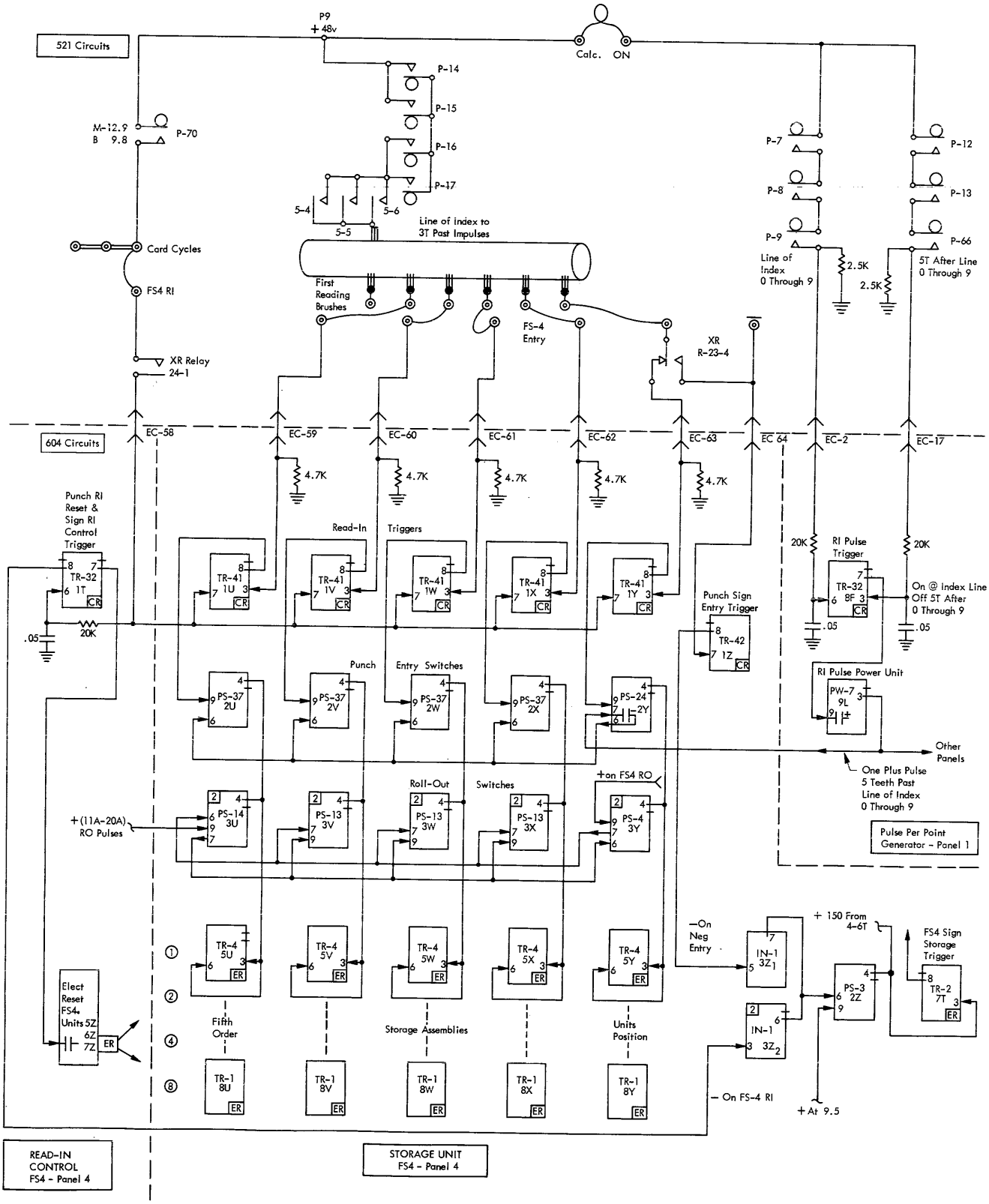

Figure 85. Pulse Per Point Read-In to FS-4 (G Suffix)

PULSE PER POINT GENERATOR

The single trigger, 8F, and the power unit at 9L, generate the necessary single pulse at five teeth past zero through nine (a total of ten pulses). A trigger circuit is used rather than a direct CB impulse in order to generate the extremely sharp, rapid shift needed by other electronic circuits. A TR-32 unit is used and responds to the positive impulses supplied to it from the 521.

OBJECTIVE: One plus pluse at 5T past each index point 0 through 9.

1. At 0 line of index TR-32 at 1-8F is turned on by plus 48 volt impulse to its left grid from Punch cams 7, 8, and 9. The resulting plus shift from the right plate feeds to the power unit at 1-9L but causes no action because its grid is already plus.

2. At 5T past zero the read-in pulse trigger is turned off by plus 48 volt impulse to its right grid from P cams 12, 13, and 66.

3. Negative shift from right plate of trigger feeds to capacitor input power unit 9L. The tube is cut off for about 50 microseconds. A positive pulse of this duration appears at its ouput and is fed to each Punch Entry Switch in the 604.

4. Each following cycle point (index 1 through 9) this action is repeated.

STORAGE UNIT PUNCH READ-IN CONTROL

A Storage Unit must be reset to zero before any card data is read into it. Only those storage units controlled to Read-In must be affected by card brush data. A 521 control panel wire from CARD CYCLES to a FS4 RI hub supplies a P cam 70 impulse at 12.9 through the XR relay point and EC connector 58. This impulse turns on the TR-32 Punch RI Reset Trigger at 4-1T and also feeds to each of the TR-41 Read-In triggers to turn them on (they had been Calculate time Reset OFF to prevent any action from card brush impulses reaching a Storage Unit not controlled to read-in on any particular cycle). The TR-32 has an external noise and contact bounce filter; TR-41's are internally desensitized.

OBJECTIVE: Reset all storage assemblies in FS4.

1. When the Punch RI trigger at 4-1T goes on at 12.9, the resulting plus shift from the right plate feeds to the Electronic Reset input inverter.

2. As discussed under the Electronic Reset circuit, this shift is coupled to the inverter 5Z and causes the reset power tube 7Z to cut off for about 200 microseconds The ER line shifts from minus 100 to 0 and resets all storage assemblies in FS4 to zero.

STORAGE POSITIONAL READ-IN CONTROL

Each storage assembly is fed by a Punch Entry Pentagrid Switch which in turn is controlled by a Read-In Trigger The roll-out switches shown in Figure 85 are not active in the present punch read-in operation, but they supply plate voltage to, and share plate loads with, the Punch Entry switches. For these reasons, the roll-out switches are included on the figure.

As long as a read-in trigger is ON, the plus level at its right plate will keep the number 3 grid of its Punch Entry PS unit at the conduction point. The switch unit is thus primed to pass any plus pulses applied to its number one grid (which is biased beyond cutoff). These plus pulses are fed to the "grid number one master" PS unit at 4-2Y from the pulse per point power unit, 1-9L, discussed above. The slave units are fed in turn from 4-2Y.

OBJECTIVE: To supply the proper number of pulses to a storage assembly. A four hole in the card column controlling the units position will be used as our example.

1. At 12.9 the Card Cycles Impulse turns on the Read-In triggers.

2. At 0.5 the Read-In Pulse Power Unit supplies a plus pulse to number one grids of all Punch Entry Switch PS units. Negative pulse from tapped plate output, pin 4 of 2Y, advances units storage assembly from 0 to 1.

3. This pulsing action is repeated at 1.5, 2.5, and 3.5, advancing the storage assembly to 4.

4. At 4.0 the plus 48 volt card brush impulse wired to the FS4 units entry hub passes through R23-4 N/C to right grid of Read-In Trigger, 1Y. Trigger flips off, conditioning grid three of Punch Entry Switch 2Y negative.

5. Further half-time read-in pulses have no effect at the plate of 2Y, leaving storage assembly at 4. This is value of hole read.

The 2.5k resistors from P-9 and P-66 to ground and the 4.7k resistors from EC-59 through EC-63 to ground serve two purposes. Inter-wire noise and line floating are reduced. Just as important is the extra current drawn by these resistors to create a very slight arc at the CB's and keep a thin, non-conducting oxide film from forming on the contact points.

An X impulse instead of the Card Cycles impulse can be used to control a Storage Unit READ-IN hub. A 12 impulse will get through the XR relay, *but must not be used* since calculating is still going on at 12 time. The reset which would occur at 12 time could upset electronic calculations using the Storage Unit. If an X impulse is being used rather than Card Cycles to impulse a Storage Unit Read-In control hub, no X's must be allowed to reach any of the storage unit data entry hubs (except the units position when negative entries are desired) An X impulse into the Read-In Control hub will condition the left grids of the Read-In Triggers positive for the same time that the card brush X impulse is conditioning the right grids positive The trigger is thus being told to turn on and off at the same time. Under such conditions a trigger can become self-flipping (like a multivibrator). Since both the control input X and data input X impulses cease at the same instant, the final position of the Read-In Trigger will be largely a matter of chance. This trouble does not develop when a Card Cycles control impulse is used because of its longer duration through the XR relay point; the Read-In Trig-

gers may oscillate during X time, but their final position will be established by the later removal of the Card Cycles impulse (at 11.7 when the XR relay opens).

STORAGE UNIT PUNCH SIGN READ-IN

An X or 12 impulse read into the units position entry of a Storage Unit conditions the machine to treat the figure group as negative. The separate minus hub will accept any impulse, 12 through 9, to indicate negative data. The fact that a negative figure group has been read into a Storage Unit is indicated by the ON condition of the Sign Storage trigger. For FS4 this unit is located at 4-T7 and is drawn in the lower right of Figure 85. With a negative punch entry this trigger will be turned on at 9.5 by a CB controlled, trigger generated pulse.

OBJECTIVE: To turn on Sign Storage Trigger 4-7T if FS4 is being read into and if a negative entry is being made. (Figure 85.)

1. The Punch RI Reset and Sign RI Control Trigger, 4-1T, is turned on when FS4 RI is impulsed (12.9 from Card Cycles).

2. Negative shift at left plate feeds to inverter switch at 4-3Z, cutting off right side of tube. Left half is controlled by Punch Sign Entry Trigger, 4-1Z.

3. An X impulse into units position of Storage Entry passes through normally open point of R23 (XR relay) and through EC 64 to turn on Punch Sign Entry trigger.

4. Negative shift from left plate of sign entry trigger cuts off 4-3Z left tube.

5. Tied plates of 4-3Z go positive and raise level of grid 3 of PS unit at 4-2Z.

6. A plus pulse at 9.5 to grid 1 of PS unit makes unit conduct. Negative output to right grid of Sign Storage trigger turn it on, indicating negative.

ELECTRONIC TIMING (G & H)

ONCE information has been entered into the 604, calculations can begin at electronic speed. Electronic calculations demand electronic timing controls. The 604 timing controls are based on an arrangement of triggers in a sequential circuit referred to at times as an Overbeck ring.

The Basic Ring Circuit (G & H)

A ring circuit consists of a series of trigger stages that operate successively as input pulses are applied to a common input line. Figure 86 shows such a ring circuit in wiring diagram and block diagram form. It should be noted that the triggers are NOT binary connected. All triggers are reset off except the first position, which is reset on. With only the first position trigger ON and all other positions OFF, a negative input pulse to the common input line which is connected to all the left side grids, can affect only the first position trigger. The first position trigger will be turned off by the input pulse. That is, the left side tube conduction is stopped, forcing the right side tube into conduction. The resulting negative shift from the right side tapped output of the first position trigger is fed to the right side grid of step 2. This negative shift stops conduction through the step 2 trigger right side tube and forces the left side tube to conduct. Thus, the second step trigger is turned on by the action of the first position trigger's going off. The next input pulse on the common line will turn the step 2 trigger off, and the negative shift from its right anode will turn on step 3. Through similar actions each incoming pulse will advance the ring one step.

If the dotted line (Figure 86) is connected from the last stage output to the right grid of the first stage, the assembly becomes a closed ring of the type used for the 604 Primary Timer. The going off of the last trigger will turn on the first stage trigger and the stepping process will continue around again. If the output of the last stage is not wired back, the ring will finish its stepping action when the last trigger goes off, which leaves all the ring triggers in the OFF status. This is known as an open ring and is used in the 604 as the Program Exit Control Ring.

Control Organization (G & H)

604 Calculations are done at high speed under general control of the Primary Timing Ring which is driven by the multivibrator pulse generator. The 604 is an "in step" calculator; the actions of all its units are timed and kept in step by the master Primary Timer (Primary Ring). The Primary Timer Ring can be thought of as an electronic index, but an index which itself controls machine operations rather than merely reflecting timings as most mechanical indexes do.

The operational control of most units is through control panel wiring. Control panel instructions are accepted by the machine step by step, and these steps are under control of the Program unit Ring. The Program Ring takes its step advance signal from the basically important Primary Timer. Figure 87 gives a picture of these control timing relationships. It will be helpful also to refer to Figure 5 in the first chapter for an overall picture of the flow of DATA in the 604. This flow of data is controlled pulse by pulse from the Primary Ring.

The multivibrator normally generates pulses continuously at 50,000 cycles per second These pulses drive the Primary Ring, but (as indicated by Figure 87) they first must pass through the Calculate Start Stop controls. If the start-stop circuits do not allow the multivibrator pulses to pass through, the Primary Ring will stop ad-

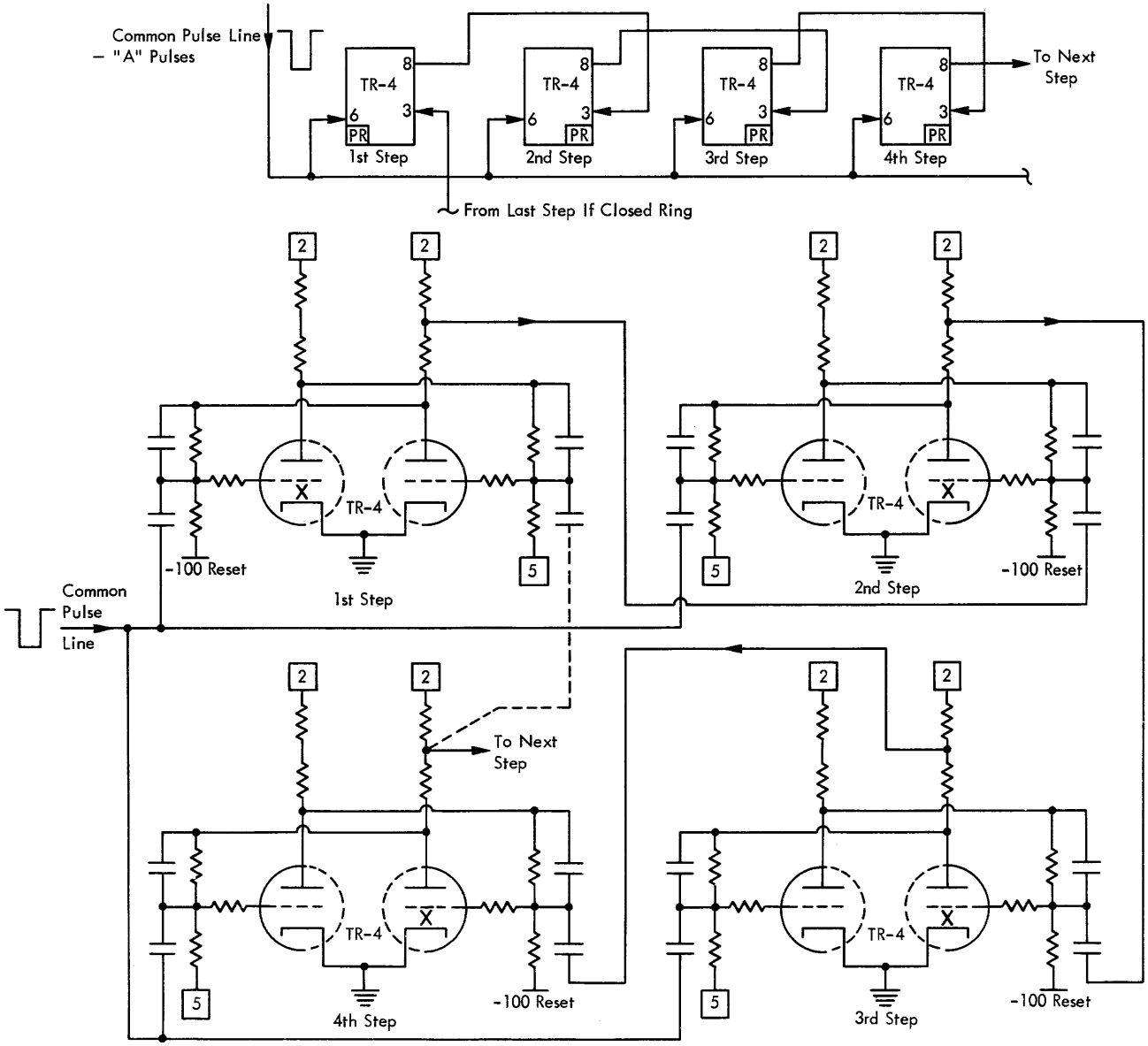

Figure 86. The Ring Circuit

vancing and all calculating will be suspended. This happens, for example, during reading and punching time. CB's in the 521 condition the start-stop circuit to block the multivibrator pulses. The Primary Timer thus stays as it was reset (trigger 1 ON) until the start-stop control is released by the 521 at 13.0 index time.

The Primary Timer Ring consists of 24 (H suffix) or 25 (G suffix) triggers arranged in a closed loop. These triggers are numbered 1 through 23 with one or two delay steps between number two and three. The Program Ring is advanced when the number two Primary Timer trigger goes on, and the first calculating action of any program step occurs at Primary Timer trigger 3 time. The one or two steps of delay give the control panel wires, and the circuits they are controlling, time at each program step to overcome the effects of stray capacitance. This allows the circuits to assume a proper conditioning level before the start of active calculation. The Primary Timer is Punch time Reset so the number one trigger is ON and the others OFF. The very first pulse allowed through the start-stop controls will thus turn on the number two trigger, and this will in turn cause the immediate advance of the Program Ring from Home (its Punch time Reset position) to step one. Further

pulses fed to the Primary Timer will make each of its triggers be ON in turn, one at a time, in a continuous progression. Except during a multiply or divide operation the Program Ring will be advanced one step each time the number 2 Primary Ring trigger comes on.

The Program Ring is an open ended string of triggers. The basic 604 contains 20 program step exit controlling triggers and a starting point Home Position trigger. The home trigger is Punch time Reset ON and the other triggers are reset OFF. The program ring may be extended to 40 or 60 exit steps on customer order, but only one home trigger is necessary in any event.

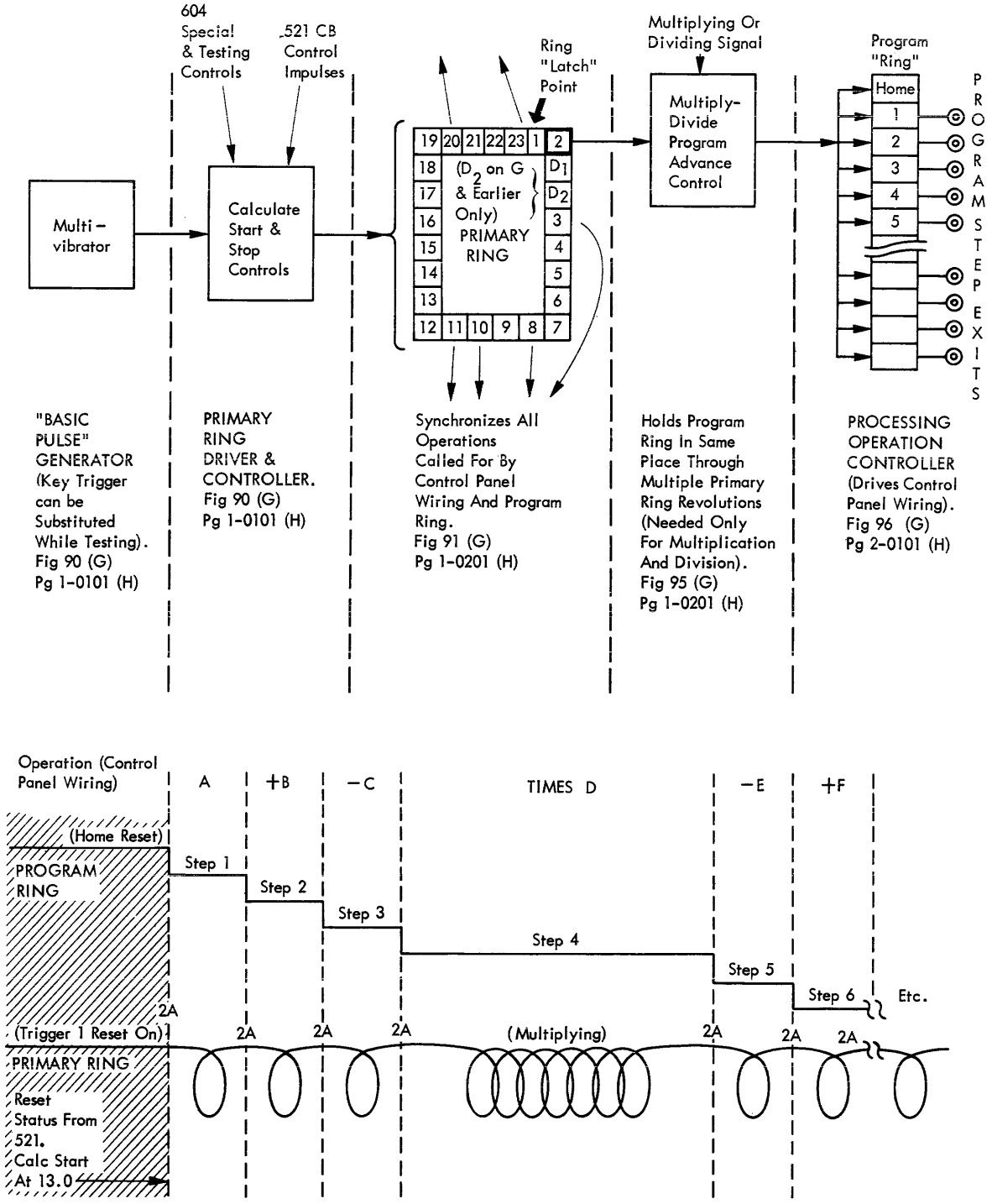

Figure 87. Basic 604 Timing Controls and a Representation of the Ring Operations While Calculating a Problem

All 604 operations except multiply and divide can be completed by one revolution of the Primary Ring. To hold the machine in the same program step long enough to complete a multiply or divide operation, a Program Advance Delay circuit is incorporated. This circuit prevents the Primary Timer trigger 2 shifts from being fed to or advancing the Program Ring until the multiplication or division has been completed.

The circuits involved in these operations will be covered shortly, but first it will be advantageous to understand the pulse numbering and notation system used for the 604 system.

Pulse and Gate Notation (G & H)

The generation of well-shaped pulses is the job done by the multivibrator and its associated clippers. The multivibrator conducts alternately through one tube section and then the other. A full cycle consists of paired, alternate conductions. A cycle thus has two clearly definable halves. The half when the left multivibrator triode is conducting is called "A" time; the half when the right triode conducts is called "B" time. Whenever the multivibrator is working, it is generating alternate A and B pulses. Both of these output times are shaped and clipped and are made available to the machine. Through the use of inverters both plus and minus A time pulses can be obtained as well as plus and minus B time pulses. It is the time relationship, not polarity, which is denoted by A and B.

It is the leading edge of the A pulses that advances the Primary Timer during calculating. Each trigger of the Primary Timer is thus ON for the duration of the A pulse and the immediately following B pulse. When the Primary Timer is latched, all we have are continuous A and B pulses; but when the Primary Timer is running, we can speak of specific numbered pulses. *That* particular A and *that* particular B pulse generated when Primary Timer trigger 2 is ON can be identified as the 2A and the 2B pulses, similarly for 3A and 3B, 4A and 4B, and so on up through 23A and 23B and back to 1. This is illustrated by the upper portion of Figure 88. The lower half of this chart shows certain very important gates and groups of pulses which will be discussed throughout this manual. For the moment we will be concerned only with the written form of pulse notation used to identify these signals.

604 Signals are either pulses or gates. Figure 89 shows representatives samples with their written notation equivalent. A pulse is a voltage shift lasting for ten microseconds at normal calculating speed. It may be a shift to a more positive (or less negative) level during active time, called a plus or positive pulse; or it may be a shift to a more negative (or less positive) level during active time, called a minus or negative pulse. If the pulse is controlled from the Primary Timer, it will be identified with the number of the timer trigger ON at the time of the pulse. The designation A or B is added to identify the first half or the secondhalf of the trigger ON cycle (A pulse time or B pulse time). Examples are plus 3B, minus 3A, plus 10A, etc. A group of consecutive pulses is written as minus (2A-5A) P, plus (11A-20A) P, etc., the parenthetical notation indicating the first and the last of the string of pulses. The "P" must be included to denote pulses as distinct from a gate signal.

A gate signal is a shift lasting twenty microseconds or more (at normal calculating speed). It may be denoted as plus or minus exactly as with pulses. The leading edge and the trailing edge are identified in parentheses followed by the letter G, such as plus (2A-5A) G, minus (3A-8B) G, etc. The timings given within the parentheses are the times at which the gate actually shifts, corresponding to the *leading edge time* of any pulse having the same timing designation. Thus a 5A pulse will NOT get through a (2A-5A) Gate, nor will 8B time be included within a (3A-8B) G. See Figure 89.

The output shift produced by a Primary Ring Trigger is a special item. Such a shift lasts for 20 microseconds and could be identified as a gate, for example, (4A-5A) G (this could be either plus or minus, depending on which trigger plate supplied the output, what inverters had been passed through, etc.). For convenience, however, the convention has been adopted to identify Primary Timer stage outputs as "AB" pulses, 4AB in the example given. This indicates a 20 microsecond shift (lasting for both A time and B time) wholly within the time duration of *one* of the Primary Timer triggers.

Any of the foregoing pulse or gate notions can be followed in separate parentheses by a signal level code as discussed in the Principles of Electronic Operation chapter and as listed in the Appendix. For example, plus (20B-1A) G (c) indicates a cathode level upward shift (from minus 25 to plus 25 volts) starting at the leading edge of 20B and ending with the leading edge of 1A.

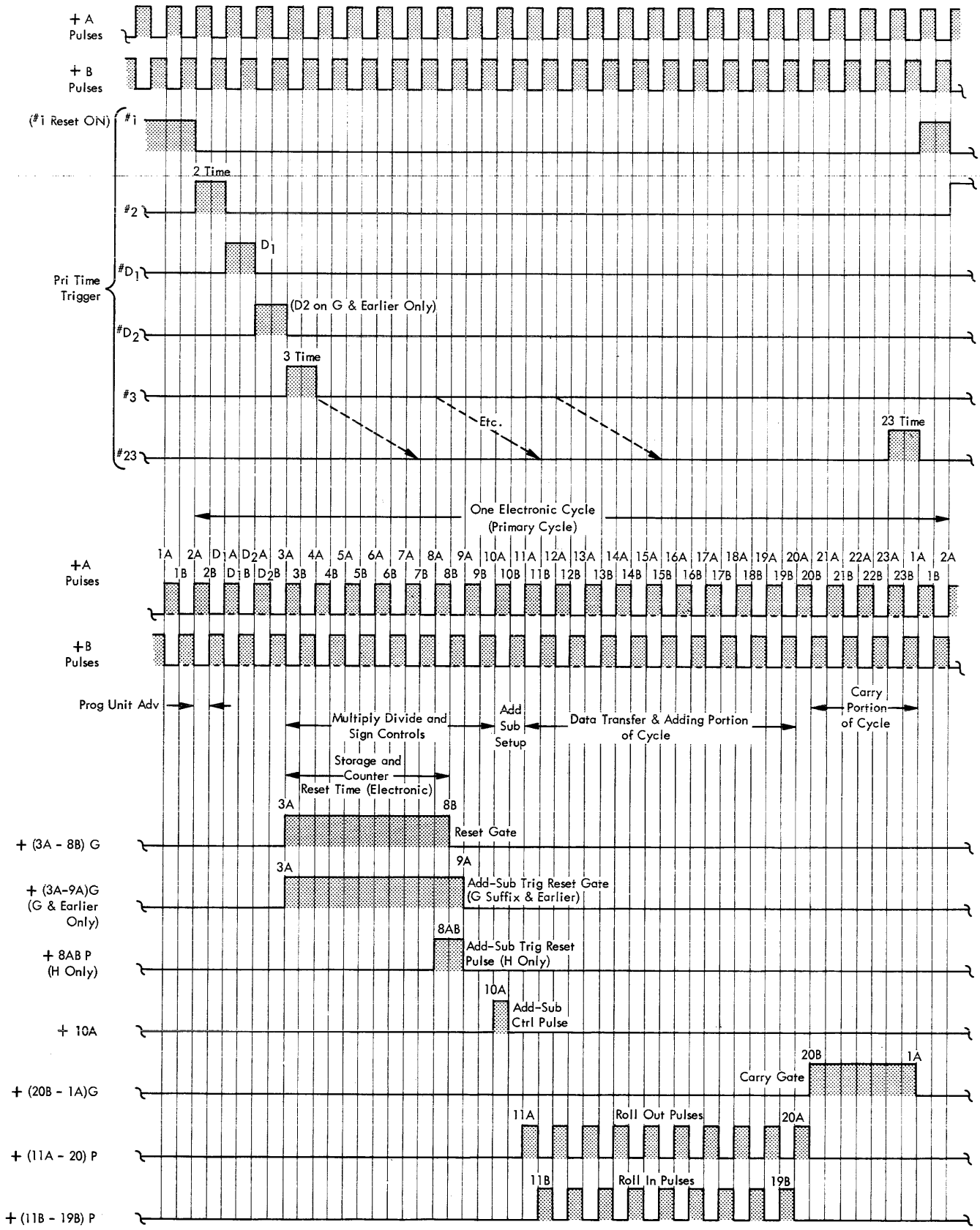

Figure 88. 604 Timings

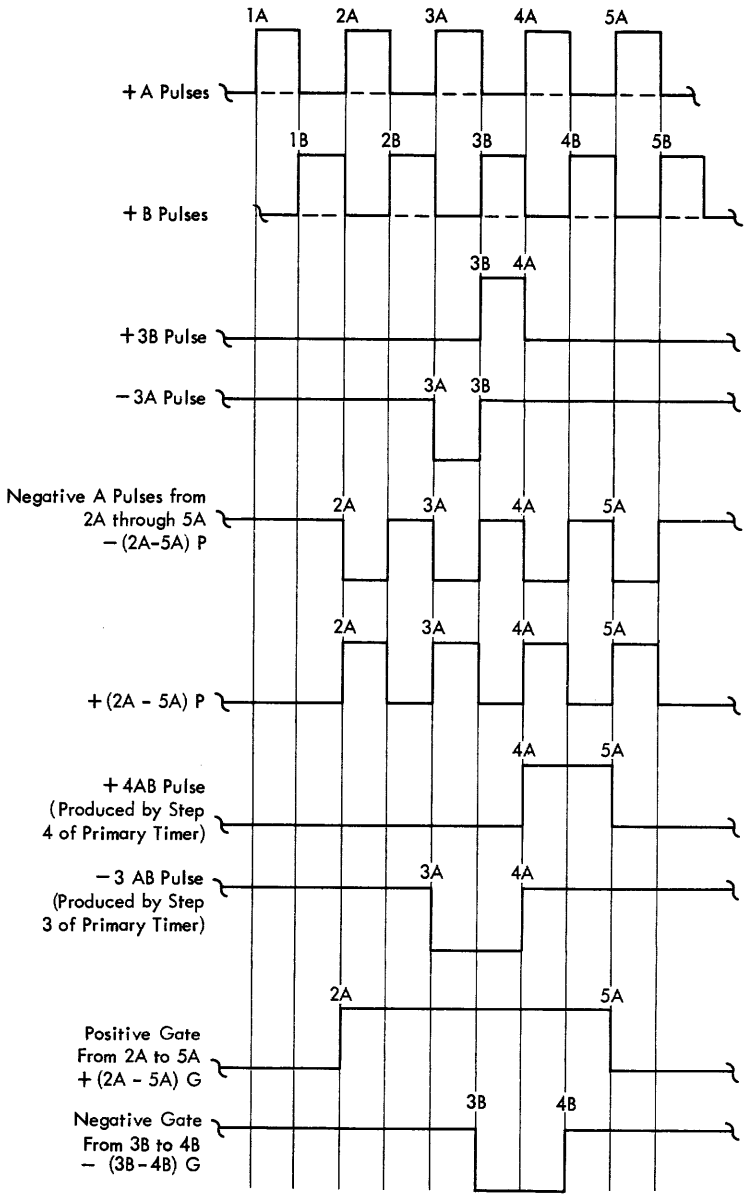

Figure 89. Pulse and Gate Notation

TIMING CIRCUITS (G & H)

THE GENERAL organization of the timing circuits was discussed earlier and illustrated by Figure 87. The specific circuits for these separate functions will now be described.

Multivibrator (G & H)

The 604 multivibrator is designed to work over a variable frequency range from about 10,000 to 100,000 cycles per second. In addition, the 604G and earlier machines have a second, switch selected range of from 1 to 100 cycles per second. These variations are provided primarily as a service aid. The operating frequency is 50,000 cycles per second. With a properly working machine any pulse rate from as slow as desired up through about 70,000 cycles per second will not affect calculation results. Above 70kc the pulses are so shortened and come so quickly that certain functions (such as counter carry) do not have enough time to be properly completed, resulting in incorrect answers. At the slower rates the punch will have to be stopped between cards to allow enough time to complete many calculations.

Pulse Generation and Calculate Start-Stop Controls

The H suffix and G suffix machine circuits differ in certain details and will therefore be treated spearately.

H SUFFIX (SYSTEM PAGE 1-0101)

The cathode of the multivibrator is connected to —100v and the plate loads to +150v. The feed-back capacity from the grid of one tube of the multivibrator to the anode of the other is 80 mmf, and the grid resistance to —100v depends on the potentiometer setting. To change the frequency of the multivibrator the resistance between each grid and —100v is altered by the dual 500,000 ohm potentiometer. The grid resistance may be varied from 500k to about 7.5k. With the potentiometer at one extreme, the 7.5k resistors are effectively not in the circuit. With the potentiometer at the other extreme, the 7.5k resistors are shunted by the 500k resistors, but the 500k resistors obviously change the 7.5k value only slightly. This change in grid resistance from 500k to 7.5k produces a change in frequency from about 15kc to 100kc.

The output of the right half of the multivibrator ($3A_2$) is fed to the B pulse clipper through section A3 of the dial switch. The output of the left half of the multivibrator ($3A_1$) is fed to the A pulse clipper through section A1 of the switch.

The capacitor input clippers are normally conducting and are cut off by negative pulses. The positive pulses at the output are fed to cathode followers. The positive A and B pulses at the output of each cathode follower are fed to numerous circuits on and from page 1-0201. In addition, the plus A (c) pulses are fed to grid 2 of the Calculate Switch. At 13.0 of the punch index P68 signals the start of calculate time by feeding plus 48 volts through EC1, manual program test switch B, calculate start push switch N/C, and the 20k resistor, to turn on the Calculate Start trigger. The negative shift from the output of the Calculate Start trigger is fed through section A2 of the dial switch and the 1000 mmf capacitor to turn on the Calculate trigger. As long as the calculate trigger is on, the plus output from the right anode conditions the calculate switch to pass the A pulses from the cathode follower. The negative A pulses from the calculate switch are inverted and fed to a PW-12 unit. The full output of this type of unit is a shift from plus 150 to plus 90 volts. These negative A pulses drive the Primary Timer shown on System page 1-0201.

The Primary Timer stops when the calculate trigger is turned off. Normally the trigger is turned off at the end of programming by the negative 1B pulse from the program end trigger page 2-0201. This pulse is fed to the left grid of the calculate trigger (page 1-0101), turning it off, and stopping the Primary Timer in step 1.

If a series of calculations takes longer than the time allowed by the 521, a pulse from the unfinished program stop switch will turn off the calculate trigger. This switch conducts on the first 1B pulse after an unfinished program is recognized. The Primary Timer stops with the number 1 trigger ON.

G SUFFIX CIRCUITS (FIGURE 90)

The cathode of this multivibrator is grounded and the plate load resistors connected to plus 150 volts. With the dial switch set in the high speed position as shown in Figure 90, the multivibrator will operate over a frequency range of about 5,000 to 100,000 cycles per second. At the HI setting, the feedback capacitors from the plates to the opposite tube grids are 80 mmf values. The frequency of the multivibrator is changed by altering the resistance between each grid and ground by means of the dual 500,000 ohm potentiometer. The 7500 ohm resistors connected between the grids and the movable arms of the potentiometer serve to limit the minimum grid desistance to ground. Thus, the grid resistance to ground may be varied from 500k ohms to about 7.5k ohms. With the potentiometer arms all the way up (Figure 90), the 7.5k resistors are effectively not in the circuit. With the potentiometer arms all the way down, the 7.5k resistors are shunted by the 500k resistors, but the 500k resistors change the 7.5k value very little. This change in grid resistance from 500k to 7.5k produces a change in frequency from approximately 5kc to 100kc. The multivibrator ceases to function in the neighborhood of 5kc.

When the dial switch is set to low speed, the effective feedback capacity between the grids and anodes of the multivibrator is changed, by means of the B section of the dial switch, from 80 mmf to 0.5 mfd. With feedback capacitors of 0.5 mfd, the frequency of the multivibrator may be varied from approximately 1 to 100 cycles per second by means of the dual potentiometer.

By experiment it was found that the best output waveshape at the HI setting was available at the multivibrator grids. At the LO setting the plates provided the more desirable output. Dial switch section C selects the better output in each instance and feeds it to the first clipper. At either setting, when the left tube is conducting a

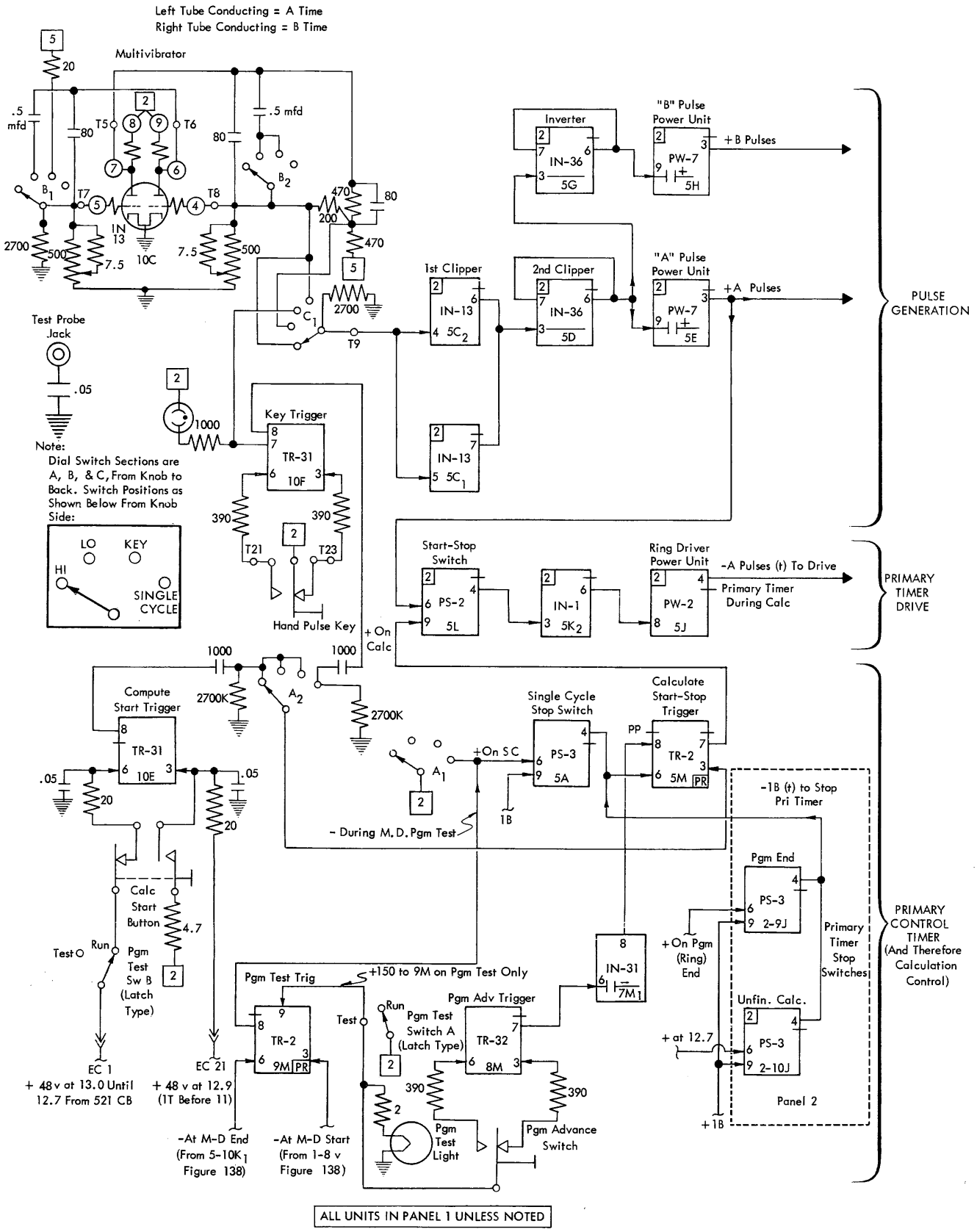

Figure 90. Pulse Generation and Calculate Start-Stop Controls (G Suffix)

"down level" signal is fed to the first clipper and cuts it off. The plus output from the first clipper feeds to the second clipper and causes it to conduct. The resulting negative output pulses feed to a capacitor input PW7 unit normally biased at the conduction level. The negative pulse inputs produce plus pulses at the output. These pulses are called the A time pulses and are used throughout the machine.

B time pulses must be timed to fit between the A pulses. In the G suffix and earlier machines this objective is accomplished by an inversion process. At A time the input to the A pulse power unit is negative. Between the A pulse times the input to the A pulse power unit is positive. It is this positive level that is used to cause conduction in the IN-36 inverter at 1-5G. The resulting negative output time of this inverter is actually B time, and is used to cut off the normally conduction-biased B pulse power unit at 1-5H producing plus B pulses which are used throughout the machine.

The primary timer is advanced during calculations by minus A pulses from the ring drive power unit at 1-5J. Whether or not A pulses reach this unit to drive it depends on the grid 1 condition of the start-stop pentagrid switch at 1-5L. Grid 3 of this unit is fed constant plus A pulses. When grid 1 is positive, these pulses get through. When grid 1 is negative, the pulses are blocked and calculation stops. Grid 1 is controlled by the right plate of the calculate start-stop trigger. When this trigger is ON, the Primary Timer receives driving pulses and calculation can proceed. The calculate start-stop trigger is turned on by a negative shift to pin 3 (the right grid). This shift comes through dial switch section A and a 1000 mmf capacitor from the left plate of the compute start trigger. The compute start trigger is a TR-31 type unit which is normally turned on by a plus 48 volt CB impulse from the 521 at 13.0. The turn-off time for this trigger is 1 tooth before eleven. The normal operation of the compute start trigger can be altered for testing purposes by the CALC START button and the PROGRAM TEST switch which are in its input circuits. These will be discussed later under "Test Panel Circuits."

Returning to the Calculate start-stop trigger, 5M, we find that after the calculate start shift at 13.0 the trigger will stay on until a negative shift is applied to pin 6. Under normal operation this is a 1B pulse from the program end switch at 2-9J which has its grid 3 conditioned positive when the last Program Ring trigger goes off. The Primary Timer thus stops with trigger 1 ON. The unfinished calculation switch, 2-10J will flip the start-stop trigger and stop the Primary Timer if a series of calculations takes longer than the time allowed by the 521.

Grid 3 of 2-10J is controlled from the 521 to go plus at 12.7, the end of the allowed calculate time. The next +1B pulse to feed the number 1 grid will cause the calculate start-stop trigger to flip off (stop position) and leave the Primary Timer "latched" in step 1.

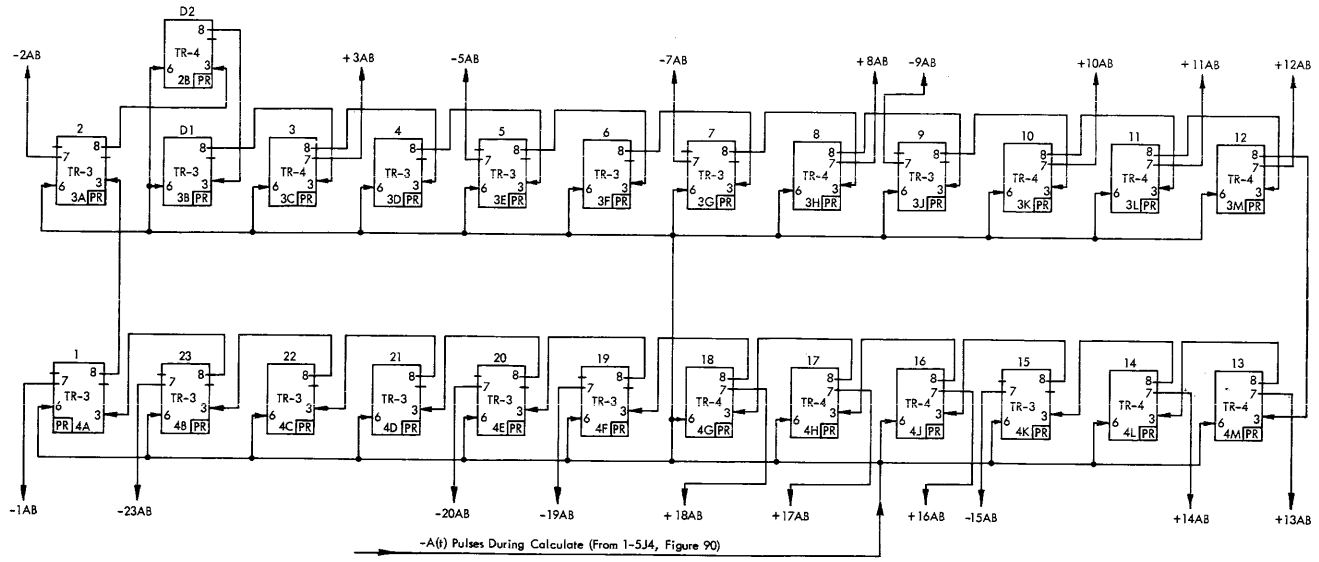

Figure 91. Primary Timer Ring (G Suffix)

The Primary Timer (G & H)

The Primary Timer is a straightforward circuit. For the H suffix machines see *Systems* page 1-0201. For the G suffix see Figure 91. Except for the physical location of the units within the panels, both circuits are so similar that they may be discussed together. Notice that the common input line feeds pin six of all units. All units except trigger 1 are Punch time Reset OFF, trigger 1 is reset ON. Output timing leads are taken from many of the triggers. Where plus AB timing outputs are desired, they are taken from right plates; minus AB timings are taken from left plates. In most cases these outputs are fed to cathode follower or inverter units located physically near the triggers. This isolates the triggers from noise pickup and cross talk which could otherwise cause erratic operation of the Primary Ring.

In the 604H the Primary Timer is physically arranged in one long row across the top of panel 3. *(System Diagrams* are not drawn to reflect physical arrangement; the location code for each unit must be consulted for this.) As a result, several feet separate trigger 23 from trigger 1. The inverter at 1-2Y_2 provides a better trigger isolating condition for bridging this gap than would a direct wire. Since G suffix and earlier machines have the triggers physically arranged to double back, such an isolating inverter is not needed because there is no large gap between any two triggers.

Gate Generation and Pulse or Pulse Group Selection (G & H)

Many specific gates must be generated within the 604. A number of the more important ones are shown in Figure 88. The principles used to create all these gates are similar. A separate trigger is controlled from the Primary Timer to come on and go off at the desired time. The output from this gate trigger is then used to feed inverters, cathode followers, or power units for use throughout the machine. If the gate is to rise and fall at A time, the gate trigger can be fed through a simple inverter or cathode follower (for isolation) directly from the proper Primary Timer triggers (since these flip at A time). Figure 92 shows a typical circuit for generating a (3A-9A) G.

If one or the other or both of the gate edges is at B time, extra circuits are needed. The B timings cannot be obtained directly from the Primary Timer triggers. Instead, the prinicple is to have a particular Primary Timer trigger control one input to a switch unit. The other unit is fed constant B pulses. The result is that a particular timed B pulse is available to control the gate trigger. Figure 93 shows a circuit such as is used to generate the (3A-8B) Gate used for Electronic Reset.

Due to the several microseconds taken to flip a trigger, the edges of gates are slightly later than the lead-

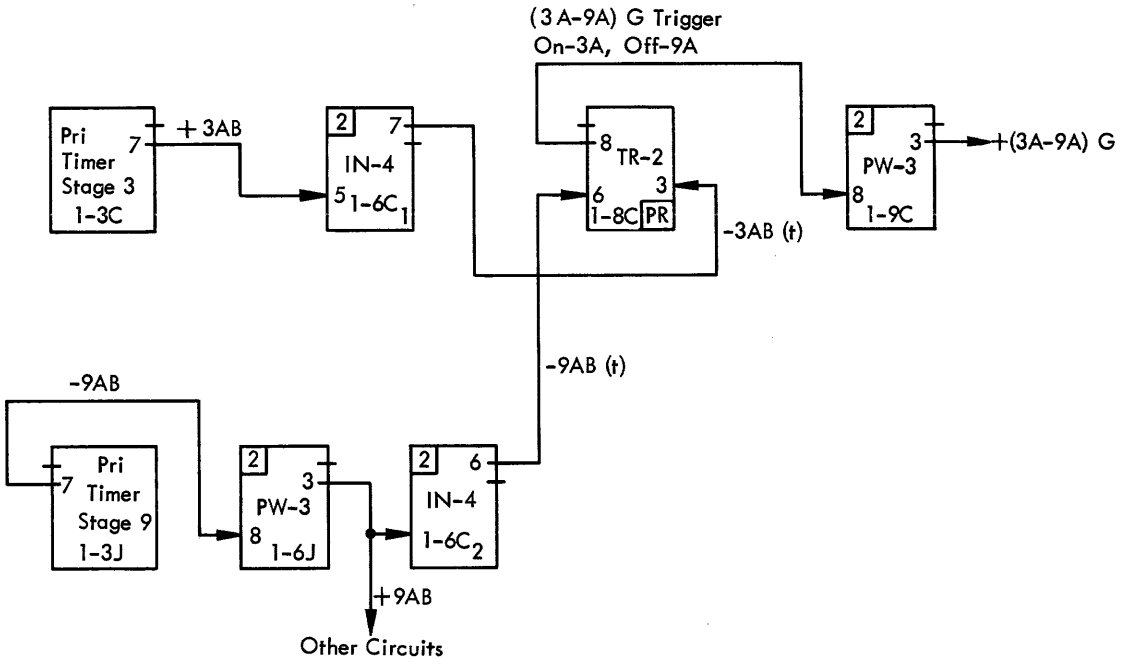

Figure 92. Plus (3A-9A) Gate Generation (G Suffix Circuit and Location)

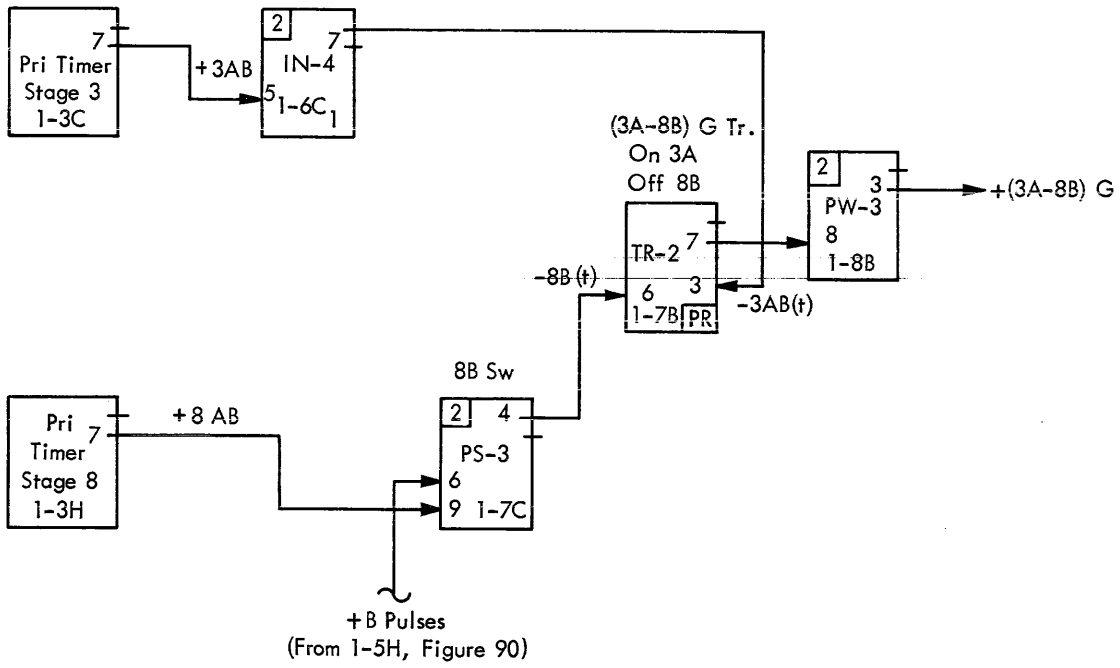

Figure 93. Plus (3A-8B) Reset Gate Generation (G Suffix Circuit and Location)

ing edge of a pulse carrying the same timing designation. What this means in practical terms is that an "A edge" of a gate must not be used to control an A pulse, nor a "B edge" to control a B pulse. This fact explains what might otherwise seem to be extra circuitry used to select a particular pulse. For example, a 10A pulse is an important one to the 604 (it controls whether an addition or a subtraction will be made in the Counter). To extract this particular pulse, and not chop off part of it or let part of another pulse sneak through, it is necessary to use a 9B-10B Gate trigger. This gate controls one grid of a switch unit fed at the other grid with continuous A pulses. The complete 10A pulse (but nothing else) gets through the switch. Figure 94 shows the G suffix version of this circuit. The timing chart included has been purposely exaggerated to show the trigger flipping delays that make it impossible to simply feed one grid of a switch unit from the 10AB Primary Timer stage and the other grid from A pulses.

The selection of a group of pulses, such as (11A-20A) P for unit roll out or (11B-19B) P for electronic read-in, differs from the selection of a particular single pulse only in that the pulse group selection gate has a longer duration. The (11A-20A) P circuit uses a (10B-20B) Gate trigger while the (11B-19B) P circuit uses an (11A-20A) Gate trigger. Once the principles are understood, the operation of any gate generator or pulse selector can be analyzed readily.

Program Advance Control (G & H)

The Program Ring must advance one step each time the Primary Timer step 2 trigger comes on unless a multiply or divide operation is called for by control panel wiring. This control of the 2AB program advance pulse is accompanied by a switch unit.

H SUFFIX CIRCUIT (SYSTEM PAGE 1-0201)

The negative 2AB output from pin 7 of the Primary Timer stage 2 trigger is fed to pin 5 of an inverter switch unit, $2E_1$. Except on multiply and divide, the second half of this inverter switch unit, $2E_2$, is cut off. With $2E_2$ cut off a plus 2AB pulse will appear each primary cycle at the inverter plates and drive the cathode follower at $2H_1$. The plus output from this cathode follower passes through the normally closed program lock toggle switch on page 1-0101 and then to the Program Ring driver tube, 1-10A, on page 2-0101. Machines having more than twenty program steps have an additional driver tube for each additional twenty program group, pages 2-0103 and 2-0105.

Returning to page 1-0201, the program advance 2AB pulse can be swamped by making the right side of the inverter switch, $2E_2$, conduct. The pin 3 input to this unit is "plus (c) during multiply or divide" from page 7-0101. Here a CF-10 cathode follower OR circuit (mixer) at $5E_1$ and $_2$ mixes for the output line the plus

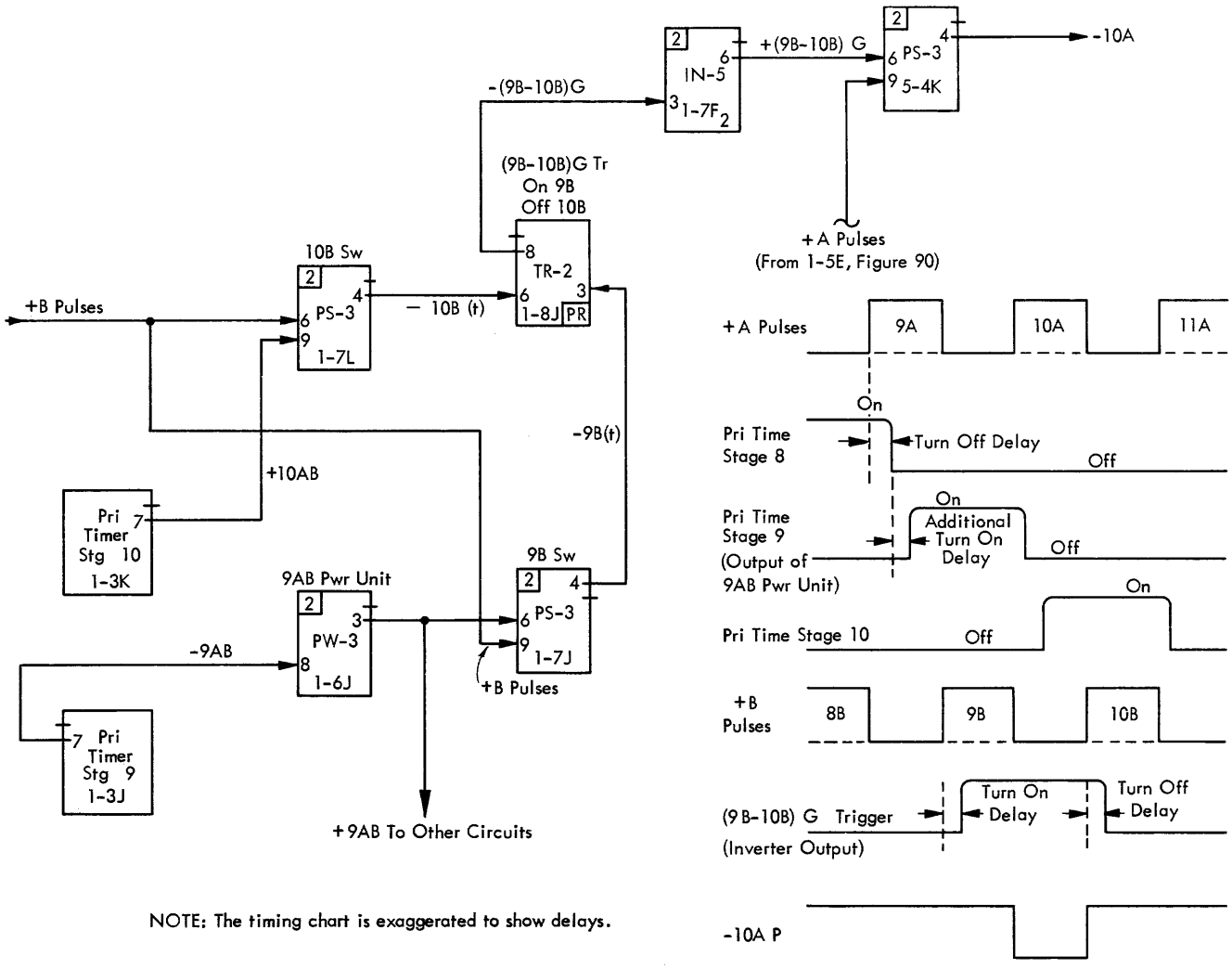

Figure 94. 10A Pulse Selection (G Suffix Circuit and Locations)

level multiply or divide condition. During multiply $5E_1$ is fed a plus input from the CF-11 unit at 5D which in turn is fed a plus level from the right plate of the multiply trigger. This trigger turns on at 4A whenever a multiply operation is programmed. During divide, $5E_2$ is fed a plus level from the CF-5 unit at $6C_1$, page 7-0201. $6C_1$ is fed a positive level from pin 7 of the divide trigger at 6B. The divide trigger comes on at 4A of any programmed divide operation.

Note that the 4A turn-on time of the multiply and the divide triggers does not interfere with the 2AB pulse which causes the initial advance into the program step calling for the multiplication or division. It is only the following 2AB program advance pulses which are swamped. The multiply and the divide triggers are turned off during the last cycle of their operations. This allows following 2AB program advance pulses to resume driving the Program Ring.

G SUFFIX CIRCUIT (FIGURE 95)

The program advance control switch is at 2-7H. 2AB pulses from the Primary Timer are fed to the number 3 grid of this PS unit from the semi-power unit (two inverters in parallel) at 1-6B. As long as the number one grid (pin 9 entry) of the program advance control switch, 2-7H, is high, minus 2AB pulses will appear on its plate. These pulses are inverted by the semi-power unit at 2-6H. The resultant plus 2AB pulses feed the ring drive power unit at 2-5H. If the machine has more than 20 programs, an extra ring drive power unit is added for each extra 20 program group.

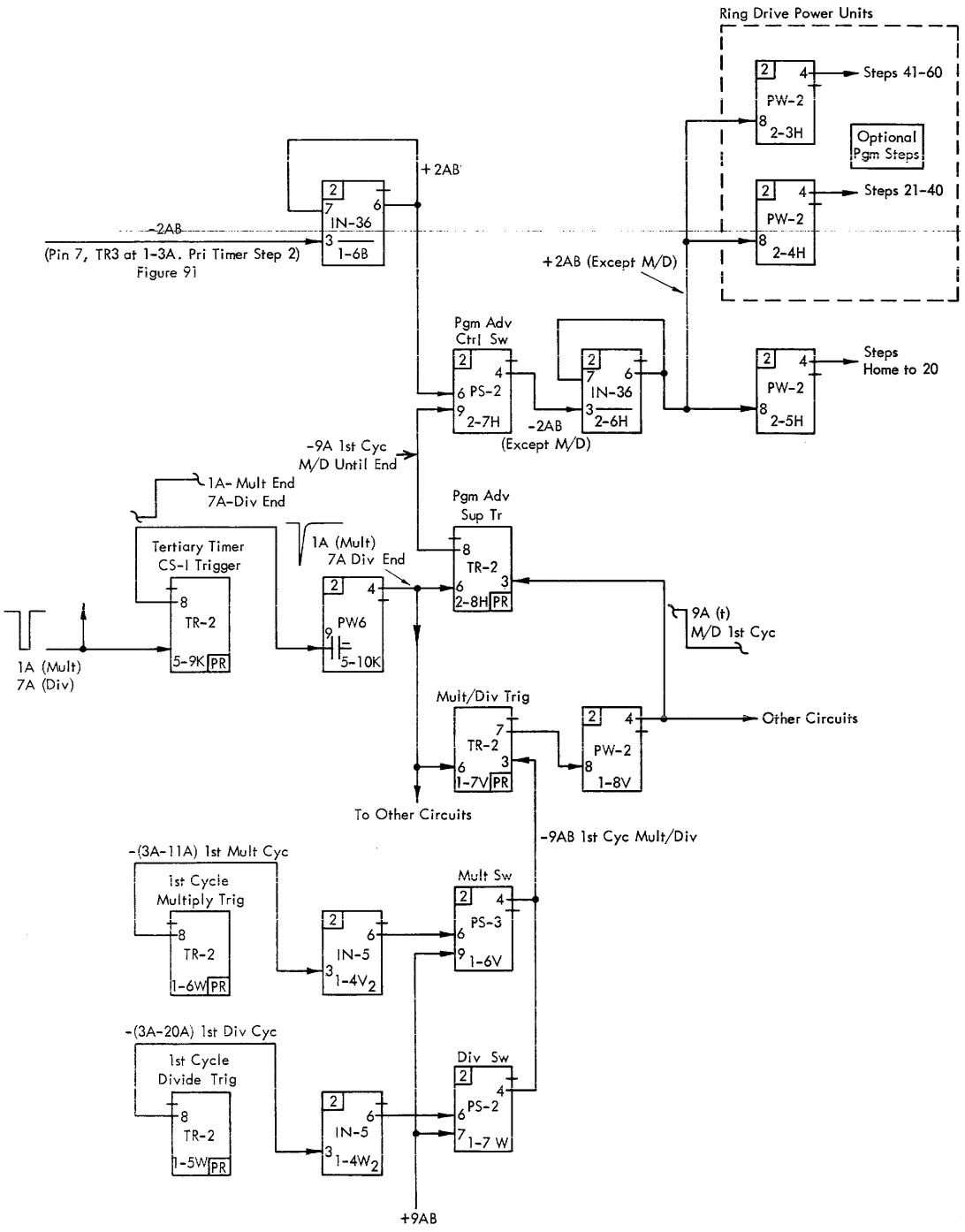

Figure 95. Program Advance Control Circuits (G Suffix)

The program advance control switch 2-7H has its number one grid controlled by the program advance suppress trigger at 2-8H; the number 1 grid is positive except when the trigger is ON. 2-8H is turned on by a shift from the multiply-divide trigger, 1-7V, at 9A of the first cycle of any multiply or divide operation. Both these triggers stay on until the end of the operation (which is signaled by the turning off of the tertiary timer column shift one trigger, 5-9H).

The multiply-divide trigger is fed a 9AB turn-on pulse through either the multiply switch or the divide switch. Each of these PS units is controlled (through an inverter) by its particular first cycle trigger. Figure 95 shows this.

Program Unit (G & H)

Calculation answers are developed step by step. Each step is controlled by instructions stored on the control panel. The Program Unit insures that the program steps are taken one at a time and in order. The basic 604 is supplied with 20 program steps. 40 and 60 step machines are available where desired by the customer. Except for multiply and divide, each program step takes one revolution of the Primary Timer. Each program step has three exit hubs which become active at the same time but which are not electrically tied together. Each program step also has a SUPPRESS hub entry. These hubs can be wired from certain control exits provided and will eliminate any output shift from the three PROGRAM EXIT hubs of the particular step. Since the suppression operation is electronic, it is possible to use this feature to change program operations during a calculation.

The Program Ring is the step memory device of the 604. It is an open string of trigger units advanced by minus 2AB pulses from a ring drive power unit. With a 40 or 60 program machine a separate power unit provides the minus 2AB pulses for each group of twenty triggers, though the step triggers are still arranged in one long string as far as trigger to trigger, right plate to right grid coupling is concerned.

The Program Unit, regardless of size, has one Home Position trigger ahead of step one. All step triggers except Home are Punch time Reset OFF. The home position trigger provides the very necessary (for ring operation) initial ON trigger and prevents the program step 1 exits from being active until the Primary Timer starts its first revolution.

The Program Unit of the H suffix machine will be found on *System* pages 2-0101 through 2-0106. An abridged G suffix circuit is provided by Figure 96. The circuits are basically similar. Each program step has a trigger unit, an inverter switch for step suppression and trigger isolation, and three exit driver tubes (cathode followers in the H suffix, inverters in the G and earlier machines). Notice that the exit units **do not have built in load resistors.** The load resistor in any instance is provided by the controlled entry hub to which the exit is wired. Unused exit hubs merely float (voltage readings taken from these hubs while testing the machine are invalid unless an external load is provided by wiring to some functional entry hub). In the 604H a program hub wired to some function will rest at about −25 volts and shift upward to +25 volts when the program step becomes active. With the 604G and earlier machines the resting level is plus 150 volts, dropping to less than +50 volts when the program step is in use.

If the calculations called for are too long to be completed in the time allowed, the incomplete answers must be prevented from punching. The Unfinished Program circuit recognizes this condition, stops the Primary Timer, kills the punch-out circuits, and activates the UNFINISHED PROGRAM hubs on the 521 control panel. The circuit is designated to cause these unfinished program actions to take place unless the last program step trigger in the machine (20, 40, or 60) has come on *and been turned off* prior to 521 index 12.7 time. This action causes the program end trigger to come on to indicate that the last program step has been completed. If this trigger is on at the 12.7 testing time, it is all right to punch. Otherwise, the unfinished program actions occur.

With some control panels a number of unused program steps may have to be stepped through to turn on the program end trigger and kill the unfinished program actions, but this seldom causes any practical difficulty. Any program step, used or unused, (except one calling for a multiplication or division) takes only one Primary Timer cycle, about 500 microseconds. About 240 Primary Timer cycles can thus be completed in the .116 second avaliable during calculate time (13.0 to 12.7 on the 521 index).

Specific items concerning the operation of the H and G suffix Program Unit circuits will be discussed separately.

H SUFFIX PROGRAM UNIT CIRCUITS

Program Stepping.

OBJECTIVE: Advance the program unit, one step at a time, through all programs. Signal program end upon completion (page 2-0101). This example assumes a 20 program machine.

1. The +2AB from page 1-0101 is inverted at the PW-12 unit, 10A, and fed to the left side grids of the ring and home position triggers.

2. Home position trigger turns off, trigger 1 turns on.

3. The negative output from trigger 1 is inverted and fed to the grids of the cathode followers 1F and 1G1.

4. The positive output of the cathode followers is available at the PROGRAM EXIT 1 control panel hubs. The output level when in use shifts from −25 to +25 volts.

5. Each successive +2AB pulse from 1-0101 advances the program ring.

6. During program 20, trigger 20, 10C, page 2-0102, is ON.

7. The next +2AB from 1-0101 turns off trigger 20.

8. The negative output from trigger 20 is fed to a cathode follower, page 2-0106.

9. The - (c) output 1-11G, page 2-0106, is fed through the OFF side of program repeat switch, page 1-0101, to the OFF side grid of the program end trigger, page 2-0201, turning that trigger on.

PROGRAM UNIT LOCATION CHART, ALL UNITS PANEL 2

Steps Home -20

Step	Ring Trig	Inv Sw	Left Exit Driver	Mid & Right Driver
Home	1F	-	-	-
1	1G	1B	$1C_1$	1A
2	2G	1D	$1C_2$	1E
3	2F	2B	$2C_1$	2A
4	3F	2D	$2C_2$	2E
5	3G	3B	$3C_1$	3A
6	4G	3D	$3C_2$	3E
7	4F	4B	$4C_1$	4A
8	5F	4D	$4C_2$	4E
9	5G	5B	$5C_1$	5A
10	6G	5D	$5C_2$	5E
11	6F	6B	$6C_1$	6A
12	7F	6D	$6C_2$	6E
13	7G	7B	$7C_1$	7A
14	8G	7D	$7C_2$	7E
15	8F	8B	$8C_1$	8A
16	9F	8D	$8C_2$	8E
17	9G	9B	$9C_1$	9A
18	10G	9D	$9C_2$	9E
19	10F	10B	$10C_1$	10A
20	11F	10D	$10C_2$	10E

21-40

Step	Ring Trig	Inv Sw	Left Exit Driver	Mid & Right Driver
21	1Q	1L	$1M_1$	1K
22	1R	1N	$1M_2$	1P
23	2R	2L	$2M_1$	2K
24	2Q	2N	$2M_2$	2P
25	3Q	3L	$3M_1$	3K
26	3R	3N	$3M_2$	3P
27	4R	4L	$4M_1$	4K
28	4Q	4N	$4M_2$	4P
29	5Q	5L	$5M_1$	5K
30	5R	5N	$5M_2$	5P
31	6R	6L	$6M_1$	6K
32	6Q	6N	$6M_2$	6P
33	7Q	7L	$7M_1$	7K
34	7R	7N	$7M_2$	7P
35	8R	8L	$8M_1$	8K
36	8Q	8N	$8M_2$	8P
37	9Q	9L	$9M_1$	9K
38	9R	9N	$9M_2$	9P
39	10R	10L	$10M_1$	10K
40	10Q	10N	$10M_2$	10P

41-60

Step	Ring Trig	Inv Sw	Left Exit Driver	Mid & Right Driver
41	1X	1T	$1U_1$	1S
42	1Y	1V	$1U_2$	1W
43	2Y	2T	$2U_1$	2S
44	2X	2V	$2U_2$	2W
45	3X	3T	$3U_1$	3S
46	3Y	3V	$3U_2$	3W
47	4Y	4T	$4U_1$	4S
48	4X	4V	$4U_2$	4W
49	5X	5T	$5U_1$	5S
50	5Y	5V	$5U_2$	5W
51	6Y	6T	$6U_1$	6S
52	6X	6V	$6U_2$	6W
53	7X	7T	$7U_1$	7S
54	7Y	7V	$7U_2$	7W
55	8Y	8T	$8U_1$	8S
56	8X	8V	$8U_2$	8W
57	9X	9T	$9U_1$	9S
58	9Y	9V	$9U_2$	9W
59	10Y	10T	$10U_1$	10S
60	10X	10V	$10U_2$	10W

Figure 96a. Chart of Program Unit Locations

10. The positive output of the program end trigger conditions one grid of the switch 11F; the other grid is conditioned by +1B (c) pulses.

11. The output of the switch 11F (-1B when the program end trigger is ON) turns off the calculate trigger, page 1-0101.

12. Turning off calculate trigger stops the primary timer at 1B.

NOTE: The output of the PW-12 unit 10A, page 2-0101, is shown as a full output. However, because of the plate load resistor used, and the fact that the unit is cathode-follower fed, the voltage levels are +150v to +90v and the output is so labeled.

Program Suppress. Any program step can be suppressed by wiring a plus voltage into the corresponding suppress hub. This may be obtained from the SUPPRESS WITHOUT BALANCE TEST hubs, the SUPPRESS ON PLUS BALANCE hubs, or the SUPPRESS ON MINUS BALANCE hubs. At appropriate times these hubs provide an output potential of about plus 25 volts (*System* page 8-0201). When a program step is suppressed, the program exits for that step are inactive (do not shift level), but the machine Primary Timer still goes through a revolution for that step.

OBJECTIVE: To suppress program step 1. To prevent program 1 exits from becoming active (page 2-0101).

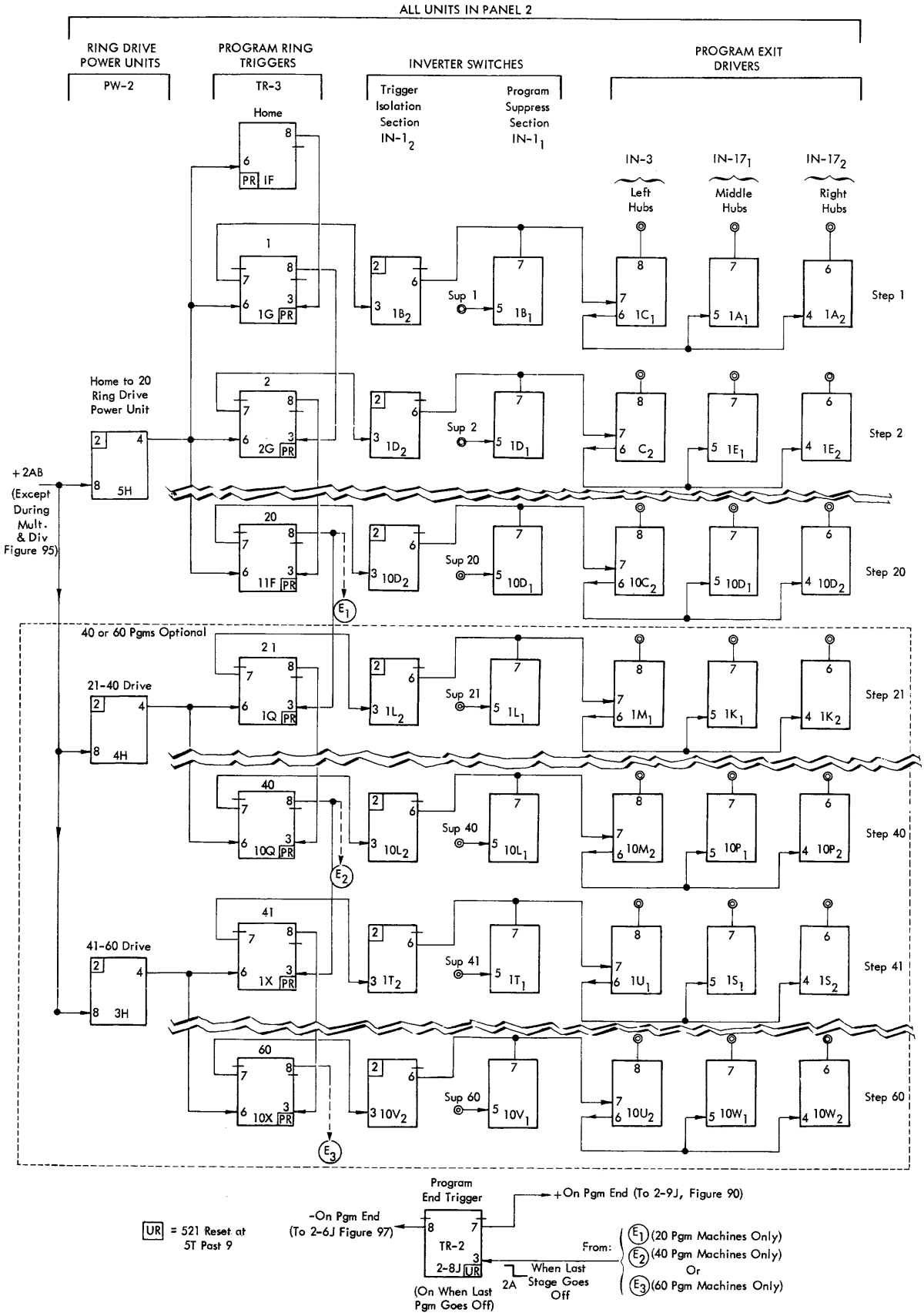

Figure 96b. The Program Unit (G Suffix)

1. Control Panel wire from SUPPRESS ON MINUS BALANCE to SUPPRESS hub, PROGRAM 1.

2. Plus voltage at the grid of one half of an inverter switch ($1E_1$ and $1D_1$) results in a negative output from the switch, regardless of the condition of the grid of the other half.

3. The negative output from the inverter switch is fed to program exit 1 cathode followers (1F and $1G_1$) preventing their outputs from going positive (becoming active).

Unfinished Program. Unfinished Program operation centers around the unfinished program switch 1-11E, page 2-0201. If a program end has not been signaled by 12.7 time, an unfinished program signal is sent to the punch to pick the unfinished program relay, R32.

NORMAL OPERATION

OBJECTIVE: (Page 2-0201). Complete calculation and signal program end before 12.7 time to disable the unfinished program switch and stop the primary timer.

1. Program end trigger 11H turns on by — (c) on last program step-off from 1-0101.

2. Plus output conditions PS-5 unit 11F.

3. Plus 1B conducts through 11F to turn off calculate trigger (page 1-0101).

4. Negative output from 11H disables unfinished program switch.

5. No unfinished program signal.

UNFINISHED PROGRAM

OBJECTIVE: Energize R32, unfinished program relay in the punch and stop the primary timer when 12.7 punch time occurs before program end.

1. Positive output pin 8 of 11H conditions pin 9 of unfinished program switch 11E.

2. Unfinished program test trigger 11D turns off at 12.7 from EC22.

3. Positive output through CF-5 unit, $11G_2$ [+ (c) on unfinished program test] causes 11E to conduct.

4. The + (c) on unfinished program test signal is sent to 1-0101 to turn off calculate trigger.

5. Negative output from 11E is inverted to fire unfinished program thyratron.

6. R32 is energized through EC65.

7. R32-4, 5 and 6 points open (521 print, section 1B) and remove the plus 65 volt impulses normally supplied to the punch out thryratrons in the 604. Calculate punching only is de-activated. (Any gang punching operations are not affected.)

8. R34-1 point closes (521 print, section 4A) to activate UNFINISHED PROGRAM hubs. These can be wired to MACHINE STOP hubs if it is desired to stop the punch for immediate attention whenever an unfinished program occurs.

G SUFFIX PROGRAM UNIT CIRCUITS

Program Stepping.

OBJECTIVE: Advance the Program Unit one step at a time through all programs. Signal program end upon completion (Figure 96).

1. A plus 2AB pulse drives the ring drive power units each Primary Timer cycle (except multiply or divide). Power unit at 2H feeds negative 2AB to triggers Home through 20.

2. Home trigger turns off at 2A, turning trigger 1 on.

3. Negative output from trigger 1 pin 7 is inverted by $1B_2$ and fed to program exit drivers, $1C_1$ and $1A_{1 \text{ and } 2}$.

4. Program 1 exit drivers primed to conduct and cause 100 volt drop across load resistor supplied by any function control ENTRY hub to which exit wired. The level at the wired hubs will shift from about +150 to +50 volts or less. Unwired exits float.

5. Each successive 2AB pulse from Figure 95 advances Program Ring and activates another set of EXIT hubs.

6. Pin 3 of program end trigger at 8J is wired to pin 8 of the last program step trigger in the machine (20, 40, or 60). At 2A following completion of the last program step the last stage trigger returns to OFF. The resulting negative shift from its right plate, pin 8, turns on the program end trigger.

7. When program end trigger goes on, a plus output from right plate, pin 7, is fed to PS unit at 2-9J, Figure 90. This conditions switch unit grid 3, pin 6, plus.

8. Primary timer rotates around to 1AB time. +1B pulse to PS unit 2-9J leaves from plate as a minus 1B, instantly turning off calculate start-stop trigger 1-5M.

9. No further A pulses are able to reach Primary Timer; so it latches up at position 1.

Program Suppress. Any program step can be suppressed by wiring a plus potential into the corresponding SUPPRESS hub. When a program step is suppressed, the PROGRAM EXITS for that step are inactive (do not produce any shift), but the Primary Timer still goes through a revolution for that step. Plus 150 volt potentials for wiring to SUPPRESS hubs are available at appropriate times from: 1) the SUPPRESS WITHOUT BALANCE TEST hubs, 2) the SUPPRESS ON PLUS BALANCE hubs, or 3) the SUPPRESS ON MINUS BALANCE hubs.

OBJECTIVE: To suppress a program step and prevent shift to active level of PROGRAM EXIT hubs. Step 2 used as example.

1. A plus 150 volt potential into SUPPRESS 2 hub causes tube $1D_1$ to conduct.

2. Pin 7 of $1D_1$ will be at low level and keep program exit driver tubes cut off regardless of status of isolation inverter at $1D_2$. No output shift is available from program step 2 exits.

Unfinished Program (Figure 97). The test for unfinished programs is made at 12.7, the end of calculate time. The key operational units are the unfinished program test trigger at 2-5J and the unfinished program switch at 2-6J. The test trigger generates a plus shift at 12.7 of each cycle, and the switch controls it.

Each punch cycle at 9.5, five teeth before calculate start, the unfinished program test trigger is reset ON. A CB impulse then turns the trigger off at 12.7, producing a plus shift at the left plate. This shift is fed to grid 1 of the unfinished program switch, 6J, and the number 3 grid of the unfinished calculate stop switch, 10J.

NORMAL OPERATION

OBJECTIVES: Kill actions from 12.7 test shift. Stop Primary Timer in position 1 when programs ended.

1. If the programs are all completed before 12.7 time, the program end trigger will be ON. This makes grid three of the unfinished program switch negative. The plus pulse on grid 1 at 12.7 (note capacitor input) will produce no change at the output. The unfinished program thyratron will not be fired.

2. When the program end trigger goes on, grid 3 of the program end stop switch at 9J is made positive. This occurs at some 2A time. The next 1B pulse applied to grid 1 of the switch will appear at the plate as a negative pulse to turn off the calculate start-stop trigger, 1-5M. The Primary Timer stops in position 1. (Figure 90 for Primary Timer controls.)

UNFINISHED PROGRAM OPERATION

OBJECTIVES: Pick relay 32 at 12.7. Kill 604 Punch-out. Activate 521 UNFIN PGM hubs. Stop Primary Timer in position 1.

1. If program steps are still being taken at 12.7, the number 3 grid of the unfinished program switch will be positive because the

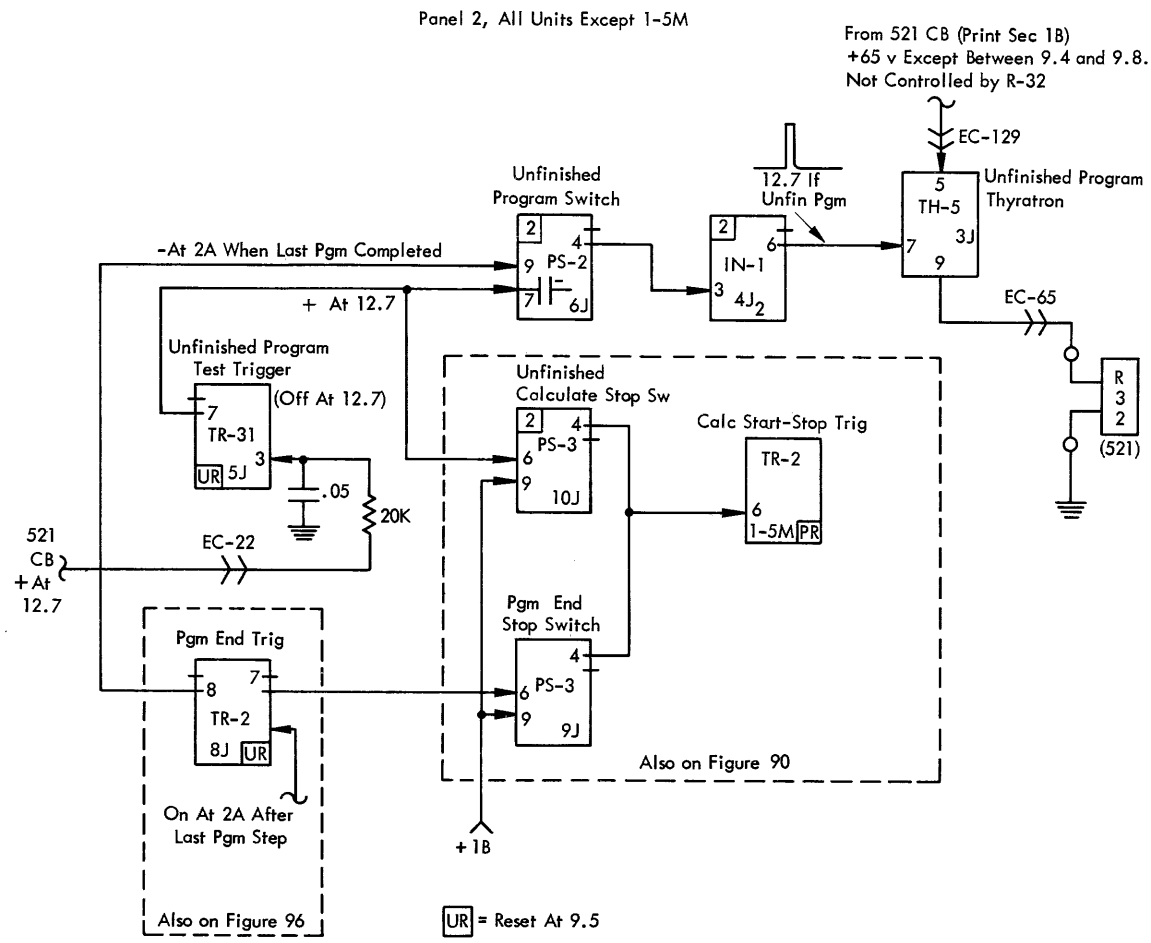

Figure 97. Unfinished Program Circuit (G Suffix)

program end trigger is still OFF. At 12.7 the unfinished program test trigger sends a plus shift to the grid 1 input of the switch. The input capacitor converts this to a plus pulse on the grid at 12.7. The pulse appears at the plate of the unfinished program switch as a minus. This is inverted by $4J_2$ and fed to the grid of the unfinished program thyratron, 3J. The thyratron fires at 12.7, picks, and holds relay 32 until the plus 65 volt potential is removed from the plate at 9.4.

2. The R32-4, 5, and 6 points (521 print, section 1B) open and kill the plus 65 volt impulses normally supplied to the 604 punch-out thyratrons. Calculate punching only is de-activated (any gang punching operations are not affected).

3. The R-32-1 point closes (521 print, section 4A) to activate the UNFINISHED PROGRAM hubs. These can be wired to MACHINE STOP hubs if it is desired to stop the punch for immediate attention whenever an unfinished program occurs.

4. At 12.7 the plus shift from the test trigger, 5J, is also fed to condition the number 3 grid of the unfinished calculate stop switch, 10J. This can occur at any step in the Primary Timer cycle, but we must wait until the next 1B pulse feeds through the switch tube and turns off the calculate start-stop trigger to stop the Primary Timer in step 1.

SPECIAL PRIMARY TIMER, PROGRAM RING, AND COUNTER RESET (G & H)

WHEN THE DC voltages are first applied, it is possible for any or all of the Primary Timer, Program Ring, and Counter triggers to come on in random order. The Counter is not automatically reset on a read-in operation as Storage Units are, and any figures left in it at random by the application of the DC, or developed in it by partial programming during the punch run-in cycle, could produce wrong answers in the first card punched (or with some programming, several cards). To prevent this possibility of error, a special circuit has been included for the Primary Timer, Program Ring, and all other triggers that are wired to Punch time, Calculate time, or Unfinished program time Reset lines. These triggers are reset to their proper positions by a relay delay circuit whenever DC power is re-applied after having been off for any reason. The circuit for this will be found on page 0-0802 (the same general circuit is used for both the H and G suffix machine power supplies). The "minus 100 volt C" line feeds to EC 34 which in turn feeds all the PR, CR and UR CB's in the 521. The minus 100v C line is fed through a relay 4B point. This relay coil is picked by the minus 100 volt supply. The minus 100v C

line thus gets its voltage some 5 to 10 milliseconds (relay pick time) later than the other minus 100 volt lines, and this causes proper resetting of the triggers.

The Counter is reset by a separate but similar circuit. Relay 5, across the −175v supply, has its 5A point in series with the −175v supplied to the Counter Electronic Reset Unit. With no −175 supply to the unit, the reset line stays near zero volts for about the 10 milliseconds taken to pick relay 5. This resets the Counter to the necessary all nines that represent a zero balance in the 604.

MACHINE TESTING CIRCUITS (G & H)

CERTAIN CIRCUITS have been included in the 604 primarily as an aid to servicing. Most of these circuits pass through and are centered around the outboard test panel mounted in the lower left corner of panel 1. There are a few differences in the items supplied by the H suffix test panel and those of the G suffix and earlier machines, though their basic objectives are identical. Figures 98 and 99 show both types of test panels.

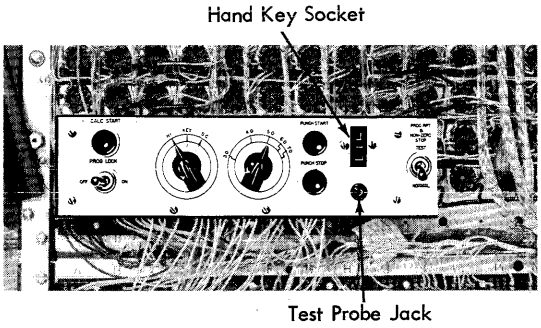

Figure 98. The H Suffix Outboard Test Panel

The Test Probe Jack accepts a "banana plug" on the end of a test probe lead. A capacitor is connected from the jack to ground, providing a means for temporarily storing a potential or creating an "AC ground" while testing. Through its use, triggers can be manually flipped, pulses swamped, etc.

A Manual Test Key cable plugs into the three terminal Jones socket and allows remote control of the electronic circuits through the test panel.

Most of the test panel circuits make use of the fact that calculations demand pulses. If the basic pulses can be controlled, the stepping of the entire machine can be controlled. These controls, used with a knowledge of the neon indicator bulbs located as shown by the charts

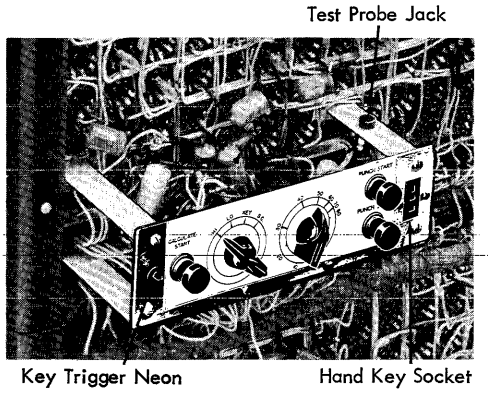

Figure 99. The G Suffix Outboard Test Panel

in the Appendix, provide a powerful servicing aid to the Customer Engineer.

The controls will be discussed as they are mounted on the test panel, left to right. Following each general discussion of the item, the H and G suffix circuits will be discussed separately. H suffix circuits are given by *Systems* page 1-0101. G suffix circuits are on Figure 90.

Calculate Start Push Button

While held depressed this switch prevents the start of any calculations called for by the 521. Whenever the button is released, a calculate start impulse is generated. Holding this button depressed while running the punch one cycle at a time allows the figures read into the 604 to be visually checked.

H SUFFIX CIRCUIT (1-0101)

While depressed, this switch prevents the TR-31 calc start trigger, 4A, from being turned on by a plus 48 volt CB impulse from the 521. This impulse comes in through EC-1 at 13.0 and normally reaches pin 6 of the trigger unit. With the switch transferred, not only is the calc start impulse from the 521 prevented from reaching 4A pin 6, but pin 3 is conditioned with a plus potential to make sure the trigger is OFF. This potential reaches pin 3 through the lower section of the depressed CALC START push switch, a 4.7k resistor, the SC tie point on the dial switch, and over to the plus 150 volt supply.

When the punch clutch is latched, the EC-1 calc start line is fed a constant plus 48 volts. Releasing the CALC START button can apply this voltage to 4A pin 6, turning the calc start trigger on, which will turn on the calc trigger 3G and allow driving pulses to reach the Primary Timer (as discussed earlier in this chapter).

G SUFFIX CIRCUIT (FIGURE 90)

While depressed, the CALC START button prevents the TR-31 compute start trigger, 1-10E, from being turned on by a plus 48 volt CB impulse from the 521. This impulse comes in through EC-1 at 13.0 and normally reaches pin 6 of the trigger unit. With the switch transferred, not only is the calc start impulse from the 521 prevented from reaching 1-10E6, but a plus 150 volt potential is applied to pin 3 through the other half of the switch (and a 4.7k resistor) to make *sure* the trigger is OFF.

When the punch clutch is latched, the EC-1 calc start line is fed a constant plus 48 volts. Releasing the CALC START button applies this voltage to pin 3 of the compute start trigger and turns it on. The resulting negative shift at pin 8 feeds to the calculate start-stop trigger, 5M, turns it on, and permits A pulses to drive the primary timer as discussed earlier in this chapter.

Program Lock Switch (H Only)

This is a single pole toggle switch (page 1-0101). When thrown to the ON position this switch opens the 2AB Program Ring drive circuit from the Primary Timer. This prevents any further advance of the Program Ring and enables the Customer Engineer to repeat a specific program as often as desired. In practice the desired program is reached by using the "Single Cycle" testing feature before the PROGRAM LOCK switch is thrown ON.

G suffix machine note: There is no program lock switch supplied with this machine. The same effect can be obtained by pulling the interpanel lead from 2Hh after "single cycling" to the desired program step. Or the program advance suppress trigger, 2-8H, (Figure 95) may be turned on by manually touching the test probe to its pin 8 (discharge the probe capacitor first by grounding it briefly to the machine frame).

Operation Control Dial Switch

In the HI position machine operation is normal, proceeding through the complete calculations as called for by the control panel and in step with the multivibrator. The LO setting is available on the G suffix only and merely slows the multivibrator down to from 1 to 100 pulses per second. These circuits have been covered earlier in this chapter under the multivibrator.

In "SC" (Single Cycle) position of the OPERATION taken by a hand key actuated trigger. When the hand key is depressed, an A pulse is generated; when the hand key is released, a B pulse is generated. This permits a pulse by pulse evaluation of circuit actions and a clear observation of the indicating neons.

Figure 100 compares the pulse generation at the HI, the LO, and the KEY settings.

In "SC" (Single Cycle) position of the OPERATION CONTROL dial switch the hand key becomes a cycle controller rather than a pulse generator. Each depression of the hand key results in one complete revolution of the Primary Timer at normal multivibrator controlled speed, regardless of the machine operations called for by programming. The Primary Timer always latches up in the trigger 1 position. This setting thus allows machine operation to be examined after each timer cycle, even during multiplication and division. (Except during multiply and divide, one cycle is also one full program.) Since the multivibrator is running at high speed on single cycle operation, machine troubles that occur only at high speed can still be analyzed cycle by cycle.

H SUFFIX CIRCUITS (1-0101)

KEY *Setting.* Turning the dial switch to KEY causes the A and B pulse clippers to be fed from the Key Trigger rather than the multivibrator. The left grid of the key trigger is connected to plus 150 volts through the 330k resistor, switch section B3 and the N/C point of the manual pulse key. Operating the manual pulse key alternately applies +150v through the two 330k grid resistors to the key trigger, causing the trigger to turn on and then off. The two outputs of the Key Trigger are fed to the A and B pulse clippers through switch sections A1 and A3. Note the capacitor inputs to these clippers. These capacitors convert the long shift conditions produced by the key trigger into the pulses useful to the machine.

The compute start-stop circuit controls KEY operation in exactly the same way as for normal high speed operations.

The read-in timer used for the "burst system" read-in used in the 604H requires A pulses at each cycle point. Therefore, when the dial switch is set to KEY, punch read-in will not normally occur. (It is possible to disconnect the motor plug of the 521 and turn it through by hand, stopping at 2 teeth past each line of index while the key trigger is repeatedly depressed and released. In this way a pulse by pulse observation can be made of read-in at each cycle point.)

Single Cycle Setting. With the dial switch set for SC, the multivibrator operates at high speed and the clippers

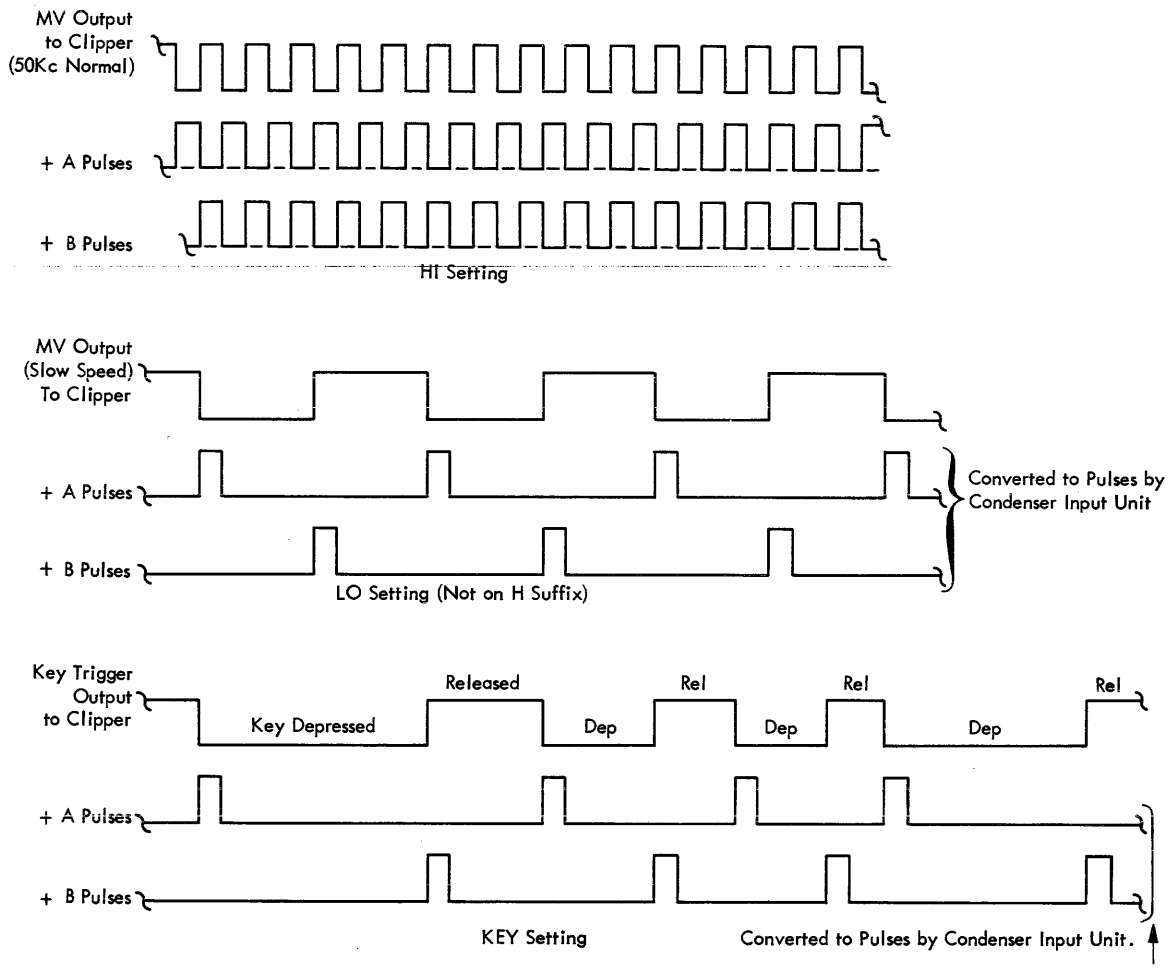

Figure 100. Pulse Outputs at HI, LO, and KEY

are fed high-speed pulses. Depressing and releasing the manual pulse key alternately applies +150v to the two grids of the key trigger through the SC taps of sections B1 and B3 of the dial switch. When the manual pulse switch is depressed, the +150v is removed from the right grid and applied to the left grid. The key trigger turns on. The positive output from the right anode feeds through the 1000 mmf capacitor, section C1, and is inverted at $7D_1$ to turn on the calculate trigger by plate pullover.

The primary timer advances with A pulses until the calculate trigger is turned off by the single cycle stop switch. At the completion of every electronic cycle, a +1B pulse is fed to grid 1 of the single cycle stop switch. Grid 3 is connected to +150v through B_2 and the zero check stop switches, resulting in a negative output to turn off the calculate trigger.

Note that the calculate start trigger does not turn from OFF to ON for a single-cycle operation. During Single Cycle the calculate trigger is turned on by plate pullover. For KEY operation, however, the trigger must turn from OFF to ON to turn on the calculate trigger by grid impulsing. It is possible that, after single-cycling several programs, it would be helpful to perform a program by key. The calculate start trigger had been turned on at 13.0 by P68. The calculate trigger cannot be turned on now unless the calculate start trigger is turned off and then on. The CALCULATE START push button switch accomplishes this. Depressing the CALCULATE START switch opens the N/C point and removes +48v from the punch to the ON side grid of the calculate start trigger. The N/O points of this switch apply +150v to the right side grid through a 4.7k resistor to turn the trigger off. Releasing the CALCULATE START push switch turns the calculate start trigger back on by removing the +150v from the right side grid input and applying +48v through the 20k resistor to the left side grid input. When the calculate start trigger turns on, the negative output turns on the calculate trigger. Key pulses can now advance the primary timer.

G SUFFIX CIRCUITS (FIGURE 90)

KEY *Setting.* Turning the dial switch to KEY kills the multivibrator and changes the input to the clipper circuit from the multivibrator to the key trigger. The multivibrator is killed by applying minus 100 volts to the left grid through section B_1 of the dial switch. The input to the first clipper, 5C, is connected to the left plate of the key trigger through section C_1 of the dial switch. The key trigger is controlled by the hand pulse key. With the key at the released position, plus 150 volts is applied to the right grid through a 390k resistor, and the trigger is held OFF. When the hand key is depressed, this plus 150 volts is applied to the left grid instead, and the trigger is forced ON. The resulting down level at the left plate appears at the input to the A pulse power unit (after passing through the two clippers), still as a down level. The leading edge of this shift couples through the input capacitor in the A pulse power unit momentarily cutting it off and producing a plus A pulse output. When the hand key is released, the resulting up level at the left plate of the key trigger is felt at the input to the B pulse power unit as a down level. Here, too, the input capacitor couples only the change, momentarily cutting off the power tube and producing a plus B pulse output.

The compute start-stop controls are the same for KEY operation as for normal operation. The "pulse per point" read-in system used by the G suffix and earlier machines is independent of the pulse generation circuits and works normally regardless of the setting of the dial switch.

Single Cycle Setting. With the SINGLE CYCLE setting of the OPERATION CONTROL dial switch the multivibrator and pulse generation circuits are identical to those of normal, high speed operation. (See switch sections B_1, B_2, and C_1.) The changes involve section A_1 and A_2 of the switch. Section A_2 connects the output of the key trigger to the pin 3 input of the calculate start-stop trigger, 5M. Depressing the hand pulse key turns on the key trigger which now causes the calculate start stop trigger to come on. "A" pulses will reach the primary timer. Section A_1 of the dial switch conditions positive grid three of the single cycle stop switch, 5A. Each 1B pulse can now get through this switch unit and turn off the calculate start-stop trigger after one primary timer revolution, latching it up in step 1.

It is quite all right to switch from SINGLE CYCLE to KEY at any point in an investigation. After switching from SC to KEY, however, it will be necessary to depress and release the CALCULATE START button in order to turn on the calculate start-stop trigger. (The normal circuit using section A_2 of the dial switch controls this.) The 1000 mmf capacitors and 2,700k resistors associated with switch section A2 are included to provide circuit isolation and to prevent voltage build-ups on the lines. These conditions could cause random flipping of the start-stop trigger while rotating the switch from one position to another.

The Multivibrator Frequency Control (G & H)

The dual potentiometer multivibrator frequency controller has been discussed earlier in this chapter under the "Multivibrator" heading. The 604H multivibrator works over a range from about 15 kc to 100 kc. The G suffix multivibrator will oscillate from about 5 kc to 100 kc on HI and 1 to 100 cycles per second on LO.

The Punch Start and the Punch Stop Buttons (G & H)

These buttons allow control of the 521 punch from a location generally more convenient for servicing than the normal punch controls. These remote controls differ from the 521 key buttons in one respect. The test panel punch start button will permit running the punch without first depressing the 521 RESET key when error conditions are indicated by the 521 lights.

The circuits are as given on *System* page 0-0700. Except for one detail, the H and the G suffix circuits are identical. On G suffix machines the remote PUNCH START button leads run through interpanel connectors 1Hg and 1Gg rather than the 1Cg and 1Ch terminals given on page 0-0700. The EC connectors are not changed. In tracing circuits on page 0-0700 (or on Sections 1 and 2 of the 521 print) the objective is to pick relay 3 which will cause the punch to run. The following three facts will also be helpful:

1) The CALC ON hubs are jackplugged when the 604 is being used. (If the 521 is being used as a simple gang punch, the CALC OFF hubs are jackplugged to remove the 604 interlocks from the circuit.) 2) Relays 1, 3, 4, 5, and 6 in the 604 are power supply output sensing relays. When the 604 is ready to calculate and all five power supplies are delivering output, these relays will all be picked. 3) Relay 13 picks on any punch detected error condition and holds until the 521 RESET key is depressed.

Program Repeat and Non-Zero Stop Toggle Switch

This switch is available only on the 604H test panel, but methods will be given below for accomplishing the same objectives on G suffix machines. The toggle switch is a double pole unit. When thrown to the TEST position, one half of the switch converts the normally open program ring into a closed ring. When the last program step in the machine (20, 40, or 60) is completed, the activity returns to step 1 and steps down through again and again indefinitely. This is useful for servicing. Program layouts are available (CE Test Panels) that do many calculations and finally reproduce as last step answers (unless the machine is failing) the same figures fed in at the start. Such programs can be repeated indefinitely with a definite pattern observable on the indicating neons. As soon as even an intermittent error occurs, the lights change permanently to call attention to the fact. This is particularly helpful when applying the bias test to the machine during PM and trouble analysis.

The second half of the toggle switch activates circuits to cause the primary timer to latch up at the next zero check program after an error has occurred, further localizing the trouble. This zero check is a control panel pluggable feature useful to customers as well as Customer Engineers. Through these circuits the Counter can be tested to see if it has a zero balance or not at any program step where such a condition has significance. The normal output point of the circuit is a group of hubs (labeled ZERO CHECK) on the 521 panel, which emits if a non-zero condition is found.

If it is desired to operate the 604H in the locked ring condition without using the zero stop feature controlled by the same switch, zero check wires are simply omitted or removed from the control panel wiring.

Program Repeat Circuit (H Suffix). The program repeat section of the switch when on TEST, makes the calculator go into a locked ring operation, i.e., the program unit advances from program one through program twenty (standard machine), starts over at program one and continues this operation indefinitely. The circuit operates as follows: With the program repeat switch ON, the pulse from 2-0106, — (c) on last program step OFF, cannot get through the OFF side of the switch to turn on the program end trigger (page 2-0201). Instead, the pulse from 2-0106 goes through the ON side of the switch to turn on the home trigger (page 2-0101). The next 2AB pulse turns off the home trigger, which turns on program step one, and the process repeats itself.

Locked Ring Operation (G Suffix). With G suffix machines locked ring operation can be secured with a simple external jumper. Run this jumper from pin 7 of the last program trigger in the machine to pin 7 of the home position trigger, 2-1F. Pull interpanel connector 2Lh to prevent turn-off of the calculate start-stop trigger when the last program trigger goes off.

Non-zero Stop Circuit (H Suffix). The non-zero stop section of the switch, at the TEST setting, will cause any program wired to ZERO CHECK to stop the primary timer at 1B of that program if the Counter contains a non-zero condition. Values in the storage units can then be visually checked by neon indications to determine the machine failure.

On a zero check program if the counter is at non-zero, a +1AB pulse from 8-0203 feeds through the test side of the zero check stop switch to one grid of the single-cycle stop switch. The other grid of the SC stop switch receives a +1B pulse every cycle from 1-0201. The negative output of the switch turn off the calculate trigger, stopping the primary timer at 1B.

Non-zero Stopping (G Suffix). Jumper pin 6 of the unit at 1-5S_2 to pin 6 of the single cycle stop switch at 1-5A (Figure 90). The inverter at 1-5S_2 emits a plus 1AB whenever a non-zero is found in the Counter on a zero check program. With the jumper in place this pulse reaches the number 3 grid of the single cycle stop switch, 1-5A, which receives all plus 1B pulses on its number 1 grid. The minus 1B ouput from the switch tube on non-zero conditions turns off the calculate start stop trigger and latches the Primary Timer in step one at the end of the zero check program step.

Closing the Tube Gates

All settings on the Test Panel should be checked for their normal operating settings whenever closing the tube panel gates preparatory to replacing the covers. Check also that all jumpers have been removed, interpanel leads replaced, and so forth. Making this a habit can save embarrassing call backs.

Program Test (G & H)

A PROGRAM TEST key is mounted just to the right of the external neon indicating panel. This is a latch type of switch. Depressing this PROGRAM TEST switch button once sets the machine to complete one *full program step*

(including multiply or divide) with each depression of the PROGRAM ADVANCE key button. Depressing the PROGRAM TEST key a second time restores the machine to normal operating conditions. While included primarily for the convenience of the customer, this provision will be found quite useful for servicing as well. The test panel dial switch must be set to HI to secure normal operation when using Program Test.

H SUFFIX CIRCUIT (1-0101)

The program test switch has two sections. When program testing, section B opens the calc start line from the 521 so the calc start trigger, 4A, will not be turned on at 13.0. This places even the first program step under control of the PROGRAM ADVANCE button. Section A of the program test switch supplies DC power to the otherwise dead program test trigger (and also to the program test indicating light). Running the punch one cycle to read in the card resets the program test trigger OFF. From this point on there are two objectives to the circuit: 1) Turn on the calculate trigger with each depression of the PROGRAM ADVANCE key (this will allow driving pulses to reach the primary timer). 2) Turn off the calculate trigger at 1B at the end of each program. Except for multiply and divide programs, only one primary timer cycle is necessary to complete one program step. During multiply or divide the program test trigger, 4E, blocks the 1B turn-off pulse to the calculate trigger until the multiplication or division is finished.

The calculate trigger, 3G, is turned on with each depression of the PROGRAM ADVANCE key by plate pullover from the inverter at $7D_1$. The inverter receives its input through a 1000 mmf capacitor, dial switch section C_1, to the right through a second 1000 mmf capacitor, to switch A3 as a binder, and back to pin 7 of the key trigger, 4B. The key trigger is controlled by the PROGRAM ADVANCE key button. Depressing the key button turns on the key trigger by transferring plus 150 volts from the right side grid circuit to the left. The pin 7 output of the trigger goes positive which makes the $7D_1$ capacitor input inverter conduct briefly and turn on the calculate trigger.

The calculate trigger is turned off at 1B through the single cycle stop switch, 4C. Except on multiply and divide, pin 9 of this switch is fed a plus potential through the closed (normal) non-zero stop switch and dial switch section B2 from pin 8 of the program test trigger, 4E. The primary timer thus takes one revolution and is stopped. For any multiply or divide operation the test trigger is turned on at the start and turned off at the end. While the test trigger is ON, grid 3 of the single cycle stop switch, 4C, is negative and blocks the 1B turn-off pulses to the calculate trigger 3-G6. In this way the complete multiplication or division is finished before the primary timer is stopped.

The 1000 mmf capacitors and the 2,700k resistors found around dial switch section C1 and the input to the inverter $7D_1$ are to provide isolation and to prevent a voltage charge build-up in the circuits. This could cause erratic flipping of the calculate trigger when the dial switch was operated. Section C2 of the dial switch is used only to supply tie points for the test probe jack .5mfd capacitor and 390 ohm limiting resistor.

G SUFFIX CIRCUIT (FIGURE 90)

The program test switch has two sections. When program testing, section B opens to prevent the compute start trigger, 10E, from being turned on by the 521 impulse through EC 1 at 13.0. This places even the first program step under control of the Program Advance button. Section A of the Program Test switch applies DC power to the otherwise dead program test trigger 1-9M, the program test light, and the PROGRAM ADVANCE key switch. Running the punch one cycle to read the card causes the program test trigger to be reset OFF and this is the starting point for our circuit description. There are two objectives to be met. 1) The calculate start-stop trigger, 1-5M, must be turned on with each depression of the PROGRAM ADVANCE key button. This will allow A pulses to drive the primary timer. 2) The calculate start-stop trigger must be turned off at the end of the program step. Except for a multiplication or division, this will be after only one revolution of the primary timer.

Turning on the calculate start-stop trigger from each PROGRAM ADVANCE key button depression is accomplished by a plate pullover operation. When the key button is depressed, the program advance trigger, 1-8M, is forced ON. The plus shift at the right plate causes a momentary conduction through the capacitor input inverter unit, 1-7M, plate pulling the start-stop trigger ON. Calculations thus begin.

During program testing the single cycle stop switch 1-5A provides the 1B turn off pulse to the calculate start-stop trigger. 1-5A6, the grid three input, is plus as long as the program trigger is OFF. The 1B pulse that occurs at the end of the first Primary Timer revolution can thus normally get through the single cycle stop switch and turn off the start-stop trigger, stopping the primary timer in step 1. During multiply and divide,

however, more primary timer revolutions are needed to finish the figuring. The program test trigger is turned on at the start and off at the end of any multiply or divide program. As long as the trigger is ON, the single cycle stop switch grid 3 is low, preventing the 1B turn-off pulses from reaching the start-stop trigger. The next 1B after multiply or divide end *does* turn off the start-stop trigger and stop the primary timer in the expected step 1.

ELECTRONIC TRANSFER (G & H)

THE ABILITY of the 604 to move a number group from one unit to another is the basis for all its calculation capabilities. These circuits are the most important in the entire machine for providing an understanding of 604 operations. Practically every step in every calculation will make use of the transfer principle.

The preceding sections described timing and control. It is the data flow controlled and timed by these circuits that will concern us now. Once again reference should be made to the general layout of the data flow circuits found in Figure 5.

The most basic type of transfer is from one Storage Unit to another. Numbers are stored in the 604 as combinations of ON and OFF triggers. The problem is to make the receiving unit duplicate the on-off trigger combinations of the sending unit and to do it in the most economical and flexible way possible. In the 604 there are three phases to such an operation.

1. The trigger status of the sending unit must be translated to a form acceptable by the exit channel lines. Only the Storage Unit being actively read out must be allowed to feed information to the exit channels. The electronic read-out circuits do this.

2. It so happens with the 604 design that the electronic form of the digits fed down the exit channels is not suitable for direct use by the receiving unit. Therefore, the second step in the transfer operation is to translate the electronic form of the exit channel digits into another, more directly usable entry channel form. The add-subtract unit performs this function.

3. The third and final step is to make only the desired receiving unit accept the entry channel information and convert it back into trigger status form. The electronic read-in circuits control this step.

These three phases of the transfer operation and the circuits connected with them will be discussed separately. An overall, semi-detailed view of circuits involved is given by Figure 113 for the H and Figure 114 for the G suffix and earlier machines.

The column shift unit is operationally important but is not basic to the transferring of a digit. The same is true of the ability of the add-subtract unit to convert to complement form any number passing through it. The details of both these matters will be covered later, after the basic transfer principles are understood.

Electronic Read-Out (G & H)

Our problem is to electronically sense the digit value in each storage assembly in a Storage Unit. This is done by sending ten pulses to the input point of each storage assembly in the particular Storage Unit being read out. By sensing how long (how many pulses) it takes to turn the value 8 trigger back off (as the position steps from nine to zero) the original stored digit can be determined. Since there is no interpositional carry in storage units (and in the Counter it is crippled during read-out), sending in ten pulses will roll each position around and back to its starting value, giving the machine a non-destructive read-out system.

The ten roll out pulses used are the 11A to 20A group. An electronic switch circuit activated by control panel wiring permits these pulses to reach only the particular Storage Unit desired. Figure 101 illustrates the essential tube units of a five position Storage Unit. The 11A-20A roll-out pulses are applied to and "roll around" each of the five columns of storage assemblies. When a position goes from 9 to 0, its value eight trigger goes off, producing a plus shift at its left plate. This full output level plus shift is fed to a capacitor input exit channel driver where the input capacitor converts the "gate-like" output from the value 8 trigger into a short pulse. The exit channel drivers also provide isolation between the triggers and the exit channels. G suffix and earlier machines use inverter units to feed shielded channel wires. The H suffix machines use cathode followers to eliminate the need for shielding, as discussed in Chapter Two. Functionally they all serve the same purposes.

As seen from Figure 101, each digit position in the Storage Unit drives a separate exit channel line. Since all Storage Units share these common channels, it is important to read out of only one Storage Unit at a time. There are eight channels in the machine, making it possible to transfer up to eight digits "in parallel" on the same program step. (The equivalent of an eight position Storage Unit can be obtained by using the

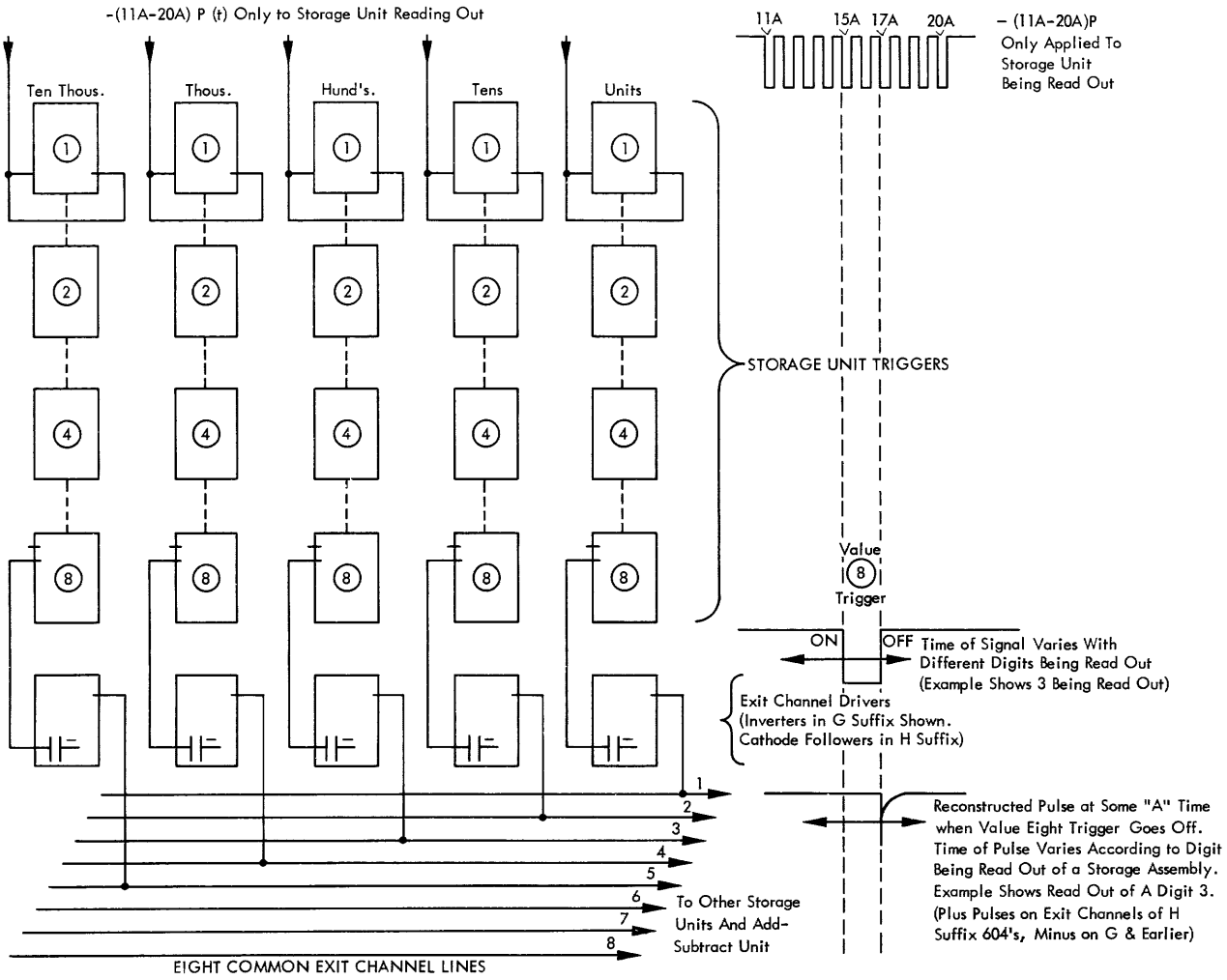

Figure 101. A Five Position Storage Unit, Illustrating the Principles of Read-Out

storage assignment relays and coupling a three position to a five position Storage Unit.)

It is important to note that it is the *time* of the spiked pulse on any exit channel which distinguishes the value of the digit being transferred down that channel. For example, if the units position of the Storage Unit is storing a nine, the first roll-out pulse, at 11A, will turn off the value eight trigger and produce a pulse on the number 1 exit channel. For a stored eight, it would be the 12A pulse that produced the output shift, etc. Figure 101 shows the timings and approximate pulse shapes for the transfer of a three. Exit channel pulses have a different, RC curve, type of shape than a normal timing pulse. Furthermore, due to trigger flipping delays, these exit channel pulses will be several microseconds later in time than the leading edge of any 11A-20A roll-out pulse. Despite these differences, the term "exit channel A pulse" is commonly used. "Reconstructed A pulse" is more accurately descriptive.

The G and H suffix circuits differ only in details, not in overall operation. These circuits will be discussed separately.

H SUFFIX CIRCUITS

The H suffix machine uses a single PS unit and a series of inverter mixers to apply the 11A to 20A pulses to the assembly positions of the Storage Unit reading out. The storage assemblies making up the Storage Units are the type using a solid state diode for the tens limiting action. The exit channel drivers are capacitor input cathode followers.

Figure 102 shows the *read-out* circuit details for

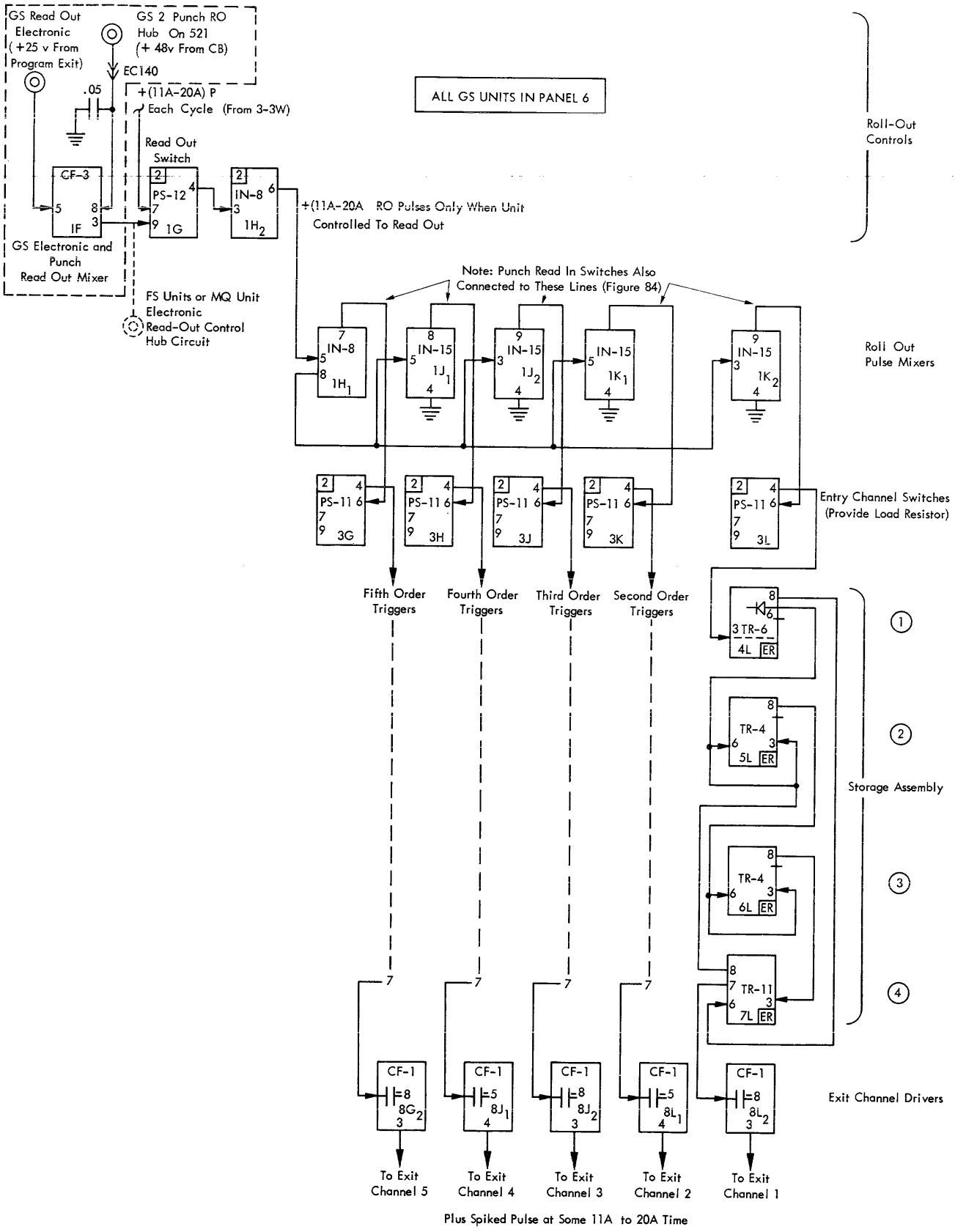

Figure 102. H Suffix Storage Unit Read-Out Circuit (Unit Locations Apply to GS2)

General Storage 2. All other General Storage units, Factor Storage Units, and the MQ Unit use the same type of circuit; only the unit locations differ. Once the circuit of Figure 102 is understood, the *System Diagrams* pages for each of the storing units should be examined to obtain familiarity with actual unit locations. The 11A-20A pulse circuit is on page 1-0201.

The read-out switch is the key control unit for the circuit. Plus 11A-20A pulses are fed each cycle to its number three grid. The number 1 grid is conditioned positive only when the particular Storage Unit is to read out. With Factor Storage Units, and the MQ Unit, this number 1 grid for each switch is run directly to a 604 control panel read-in hub. The hub is control panel wired to any desired program exit hub. Control panel program exit hubs rest at minus 25 volts until the particular program is active. A plus 25 volt level during the active time of the program step conditions the read-out switch to pass the 11A-20A pulses. The negative pulses from the PS unit plate are inverted by the following tube and applied to the roll-out pulse mixers. The resistor network in the master unit sets the level of the signal for its own grid and for the grids of the slave units fed by it. The roll-out pulse mixers have no internal plate load or plus 150 supply. These are obtained from the entry channel PS units. Minus 11A-20A tapped output level pulses are finally fed to each of the columns of storage assembly triggers to roll them around and back to their starting value. Each exit channel driver feeds the properly timed, reconstructed plus A pulse to the proper exit channel along which the pulse will travel to the column shift-add-subtract unit.

General Storage Units only can be controlled to both punch read out and electronic read out. Therefore only General Storage Units will have the cathode follower electronic and punch read-out OR circuit mixer shown at 1-F in Figure 102. A positive input level to either grid (pin 5 or 8) will produce a positive level from the common cathode output (pin 3), which feeds the number 1 control grid of the read-out PS unit. From this point on, circuit action is identical to that described above.

G SUFFIX CIRCUITS

The G suffix machine uses a separate pentagrid switch unit to control and supply 11A-20A roll out pulses to each storage assembly position in the Storage Unit. The storage assemblies are tens limited by blocking tubes; the left half of the blocking tube, IN unit is used as an inverter type of exit channel driver. Figure 103 shows the circuit details.

11A-20A pulses are applied each cycle to the number one grids of the roll-out PS units. One master unit sets the pulse level for its own number 1 grid and supplies the same level to the slave unit number 1 grids. Grid three of each roll-out switch is conditioned positive only when the unit is controlled to read out. As with the number 1 grid circuit, one of the PS units acts as a grid 3 master supplying the proper level to grid 3 slaves. On a roll-out operation the roll-out switches supply tapped level minus 11A-20A pulses to roll the trigger assemblies around and back to their starting values. The plus shift when each position goes from 9 to zero makes the exit channel drivers conduct. The exit channel drivers thus feed a properly timed, reconstructed minus A pulse to each exit channel. The pulse then travels along its exit channel to reach the column shift-add-subtract unit.

The circuits to supply the "Plus on Unit Roll Out" line are shown better in wiring diagram than block diagram form. The Factor Storage Units and MQ Unit can be controlled to read out only at electronic speed from the 604 control panel, while General Storage Units are also able to read out to punch under control of the 521 panel. Figure 104 shows the two control circuits. The Factor Storage type of control circuit is the simpler since no mixing action is involved. The IN-24 unit is simply an inverter arranged to supply also the plate load resistor for the program exit tubes (which are "open ended" unless wired to a function hub). The grid circuit resistances are such that the control tube is normally conducting, producing a plus 50 volt level at its plate. When the controlling program step becomes active, the program exit tube draws current through the program exit load 20k resistor. This drops the potential on the grid of the IN-24 unit far enough to cut off its electron flow. The resulting plus 150 volt level at the plate feeds to and activates the Storage Unit roll-out PS units.

The circuit to control the roll-out switches for General Storage Units (also shown in Figure 104) is identical to that of Factor Storage Units except for the addition of a second inverter tube sharing the 20k program exit load resistor. When the right hand half of the IN-33 unit is made to conduct by the application of the plus 48 volt CARD CYCLES impulse (note: CARD CYCLES, with its long duration, must be used to control punch read-out), the voltage at the left tube grid drops below cutoff. This produces the necessary plus 150 volt

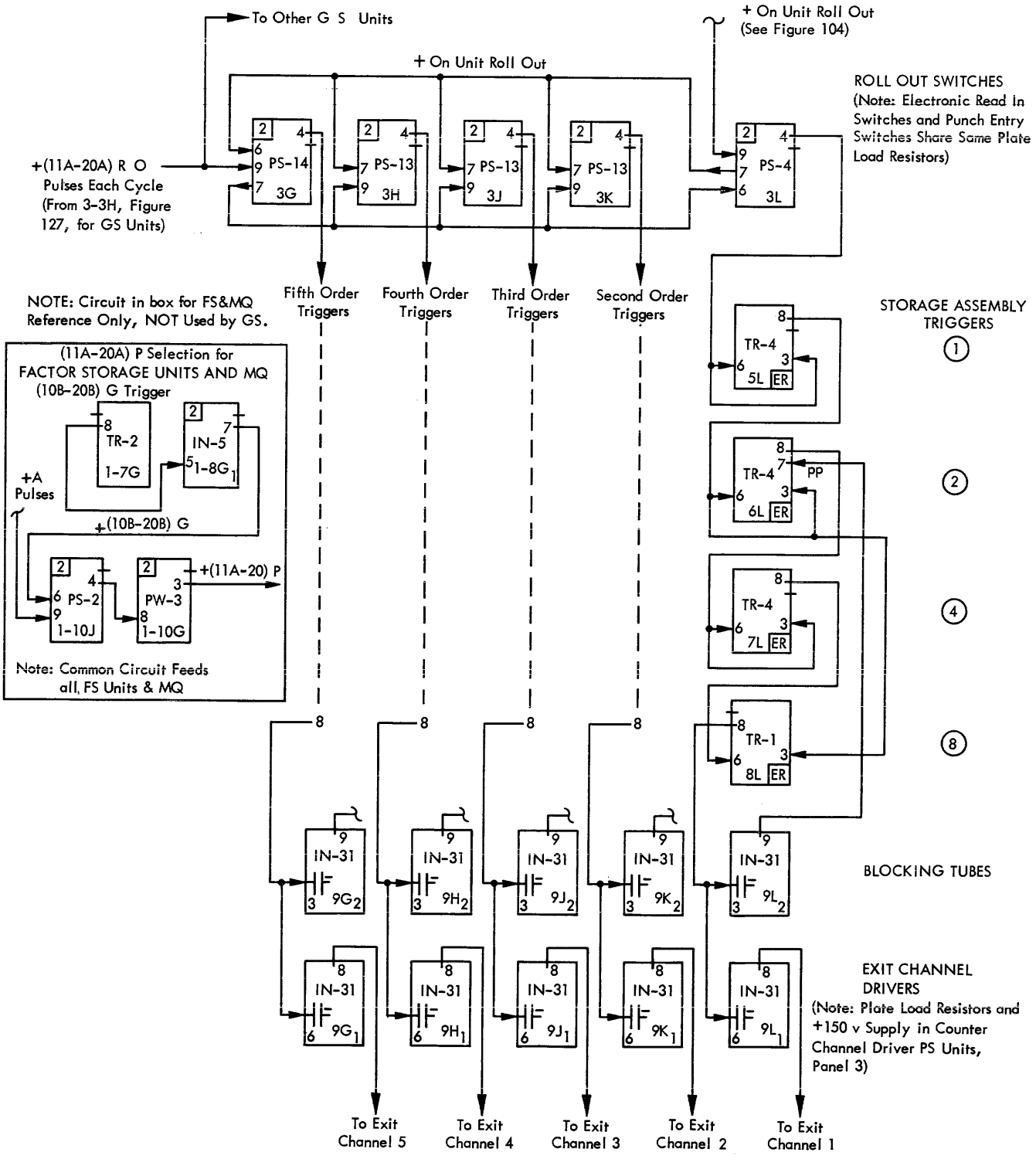

Figure 103. G Suffix Storage Unit Read-Out Circuit (Unit Locations Refer to GS2)

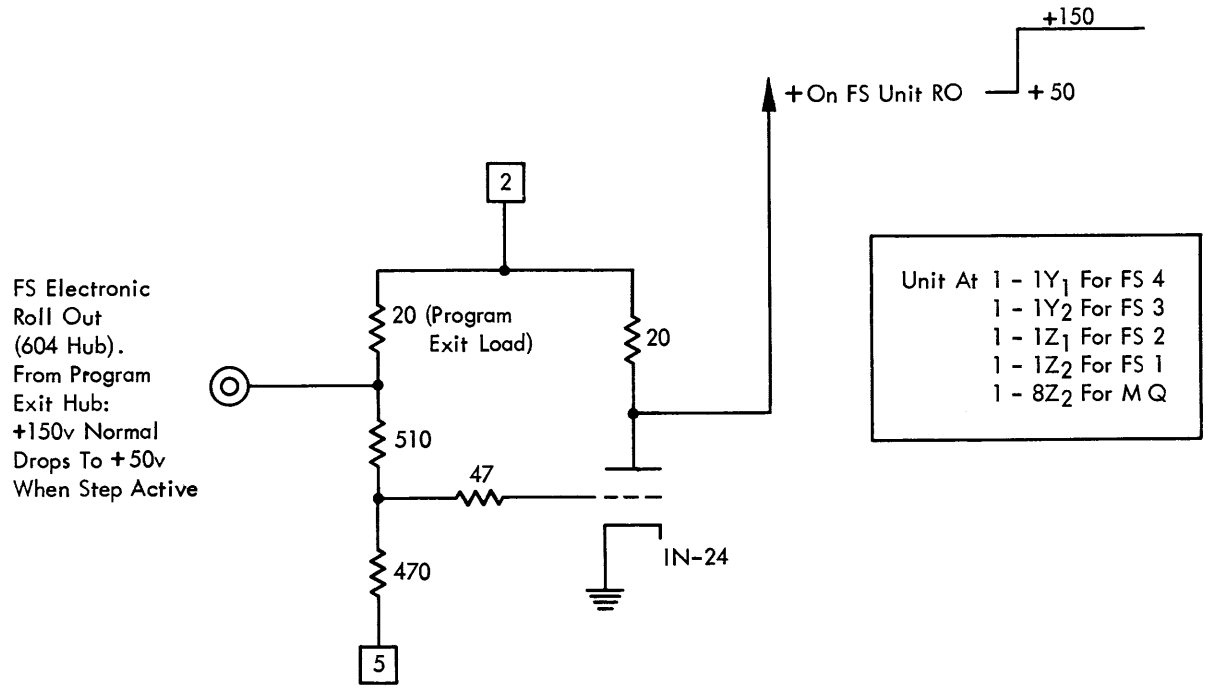

(A) FACTOR STORAGE & M Q CONTROL

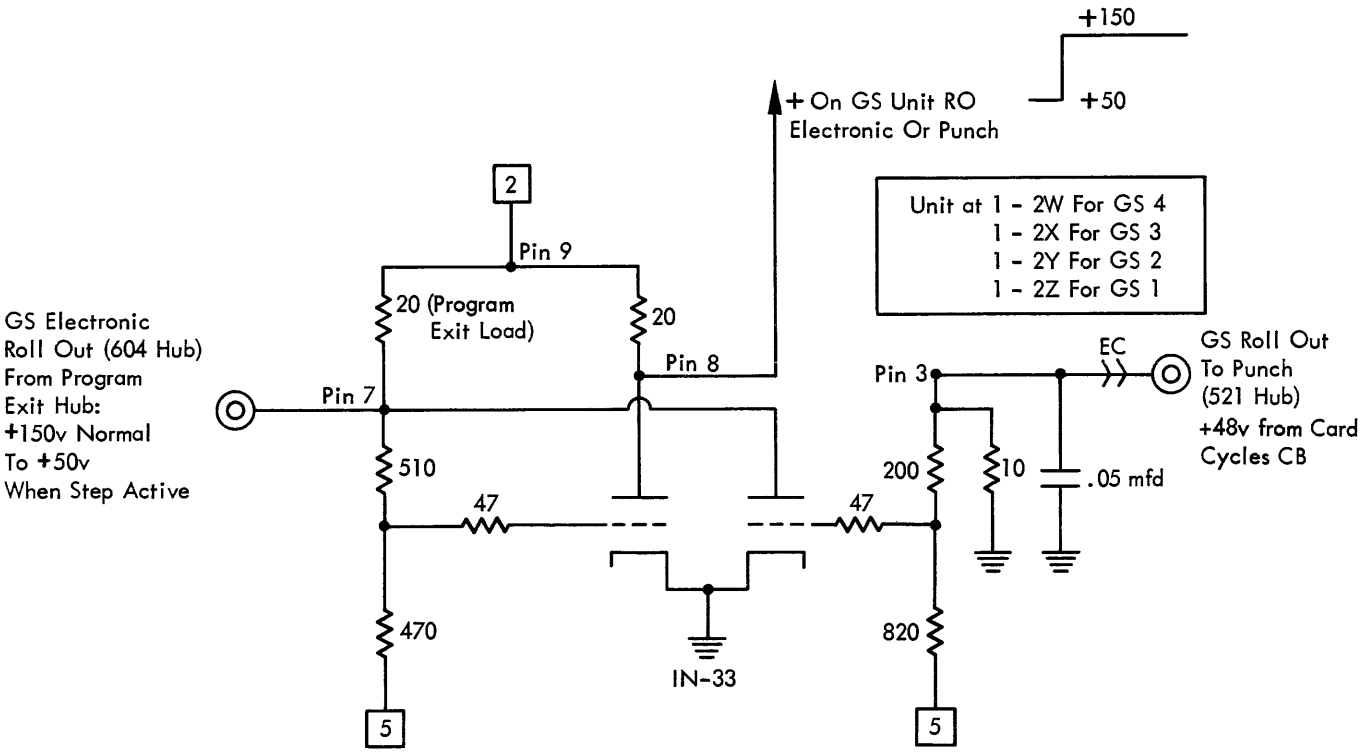

(B) GENERAL STORAGE PUNCH OR ELECTRONIC ROLL OUT CONTROL MIXER

Figure 104. Factor and General Storage Unit Roll Out Control (G Suffix)

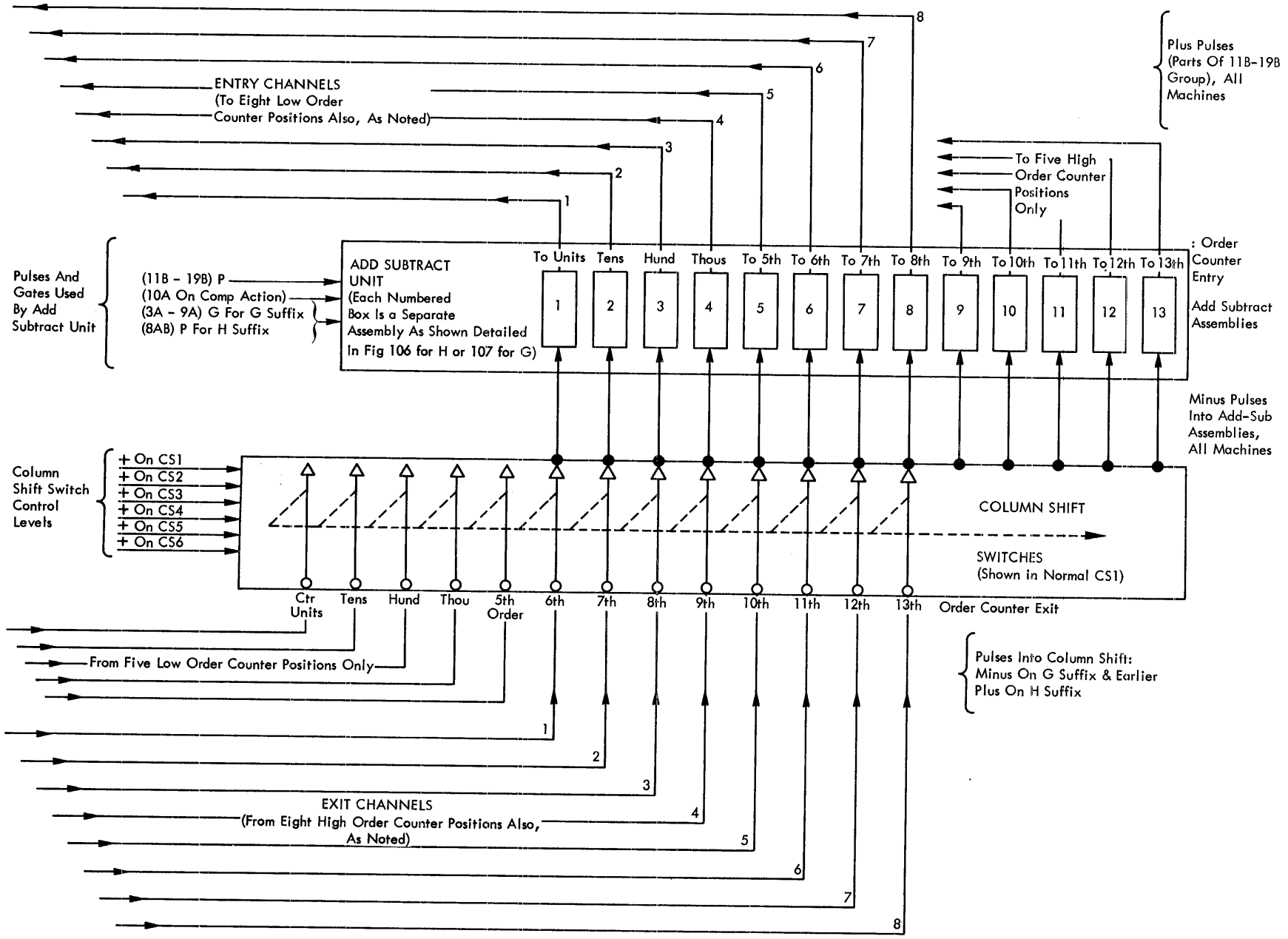

Figure 105. A Logic Diagram of the Column Shift and Add-Subtract Units

level from the left plate which feeds to and activates the roll-out switches. The end result is the same as the control from a PROGRAM EXIT, but lasts for a longer, punch cycle duration.

The Add-Subtract Unit (G & H)

Storage assemblies are essentially pulse counters. If we want to store a five, five separate pulses must be entered into the storage assembly position. As has been shown, only a single pulse is sent down any exit channel; the *time of the pulse* indicates the value of the digit. It is the function of the Add-Subtract Unit to convert this single, time variable pulse into a group of separate pulses that can advance the receiving unit to the proper position.

Each exit channel pulse passes through the column shift unit and is applied as a negative 40 volt spiked pulse to a particular add-subtract assembly in the Add-Subtract Unit. There are actually thirteen add-subtract assemblies in the Add-Subtract Unit, one for each of the eight exit and entry channels plus five more to handle the thirteen position Counter when necessary. This is represented by Figure 105.

The Column Shift Unit is simply a ganged, thirteen pole electronic switch unit that feeds the spiked exit channel pulses, with their varying times, to the thirteen individual add-subtract assemblies. For our present discussion, only this ability to feed pulses to the add-subtract assemblies is important. Figure 105 gives an accurate functional representation of the data flow through the shift unit when in its normal position for a storage to storage transfer. Exit channel 1 feeds through the column shift switches to add-subtract assembly 1 and out, in translated form, to entry channel 1. Entry channel 1 connects to the units position of all data units in the machine. Both the H suffix and the G and earlier types of column shift circuits supply minus 40 volt pulses to the add-subtract assemblies. Similarly, the add-subtract assemblies of all 604 types supply plus pulses to the entry channels. The H suffix Column Shift Add-Subtract Unit is in Panel 3. With G and earlier machines the circuits are in Panel 5.

The circuit for an H suffix add-subtract assembly is given by Figure 106 and for the G suffix machines by Figure 107. Each add-subtract assembly consists of a binary connected trigger which receives the time variable, minus input pulse from the shift unit. The trigger in turn controls one input of a switch unit that receives 11B-19B pulses at its other grid. The specific number of the 11B-19B pulses which appears at the output of the switch unit will vary as the time of the trigger flipping varies. The time variation of the exit channel pulse can thus be translated into a pulse count variation, which is our goal. The output of the switch unit is fed to an entry channel driver that sends the plus pulses down the entry channel.

H SUFFIX CIRCUITS (FIGURE 106)

The internally binary connected add-subtract trigger for each assembly has its starting position (OFF) set at 8AB by plate pullover. Internal solid state diodes provide isolation between positions. The full output from the left plate of the trigger controls half of an inverter type add-subtract switch. Minus 11B-19B pulses are applied to, and cut off the right half of the switch. When the add-subtract trigger is ON, the left half of the switch is also cut off. Therefore, when the trigger is ON, plus output pulses can appear at the combined plates of the switch. The cathode follower entry channel driver changes these pulses from plate level to cathode level. The still plus pulses are then fed to the entry channel.

Once the general operation of the circuit is understood, the very important timing conditions involved can be discussed. At 8AB time of *each cycle* the add-subtract trigger is plate pulled OFF. Since we are discussing a storage to storage transfer, the 10A pulse (which can be noted on Figure 106) is not applied. The trigger will therefore stay OFF until fed a grid input pulse as the sending unit rolls from 9 to 0 at some A time between 11A and 20A. For example, if the sending unit held a nine, the first roll-out pulse, at 11A, would advance the unit from 9 to 0 and send a reconstructed pulse down the exit channel slightly after the start of 11A time. The add-subtract trigger would thus be turned on near 11A time, conditioning the add-subtract switch to pass later B pulses. In our example (the transfer of a nine), the 11B, 12B, 13B, etc., through 19B pulses (a total of nine) would be applied to the entry channel. A receiving unit will thus be advanced by nine, the value of the original sending unit digit. The True Transfer portion of the timing chart in Figure 106 shows the operation for the transfer of a three. (The Complement Transfer Timings will be discussed later.)

While the receiving position is advancing to the proper value, the sending unit position continues to step back to its original setting. This produces no further action on its exit channel. The add-subtract trigger stays ON and the entry channel B pulses thus continue until the last at 19B.

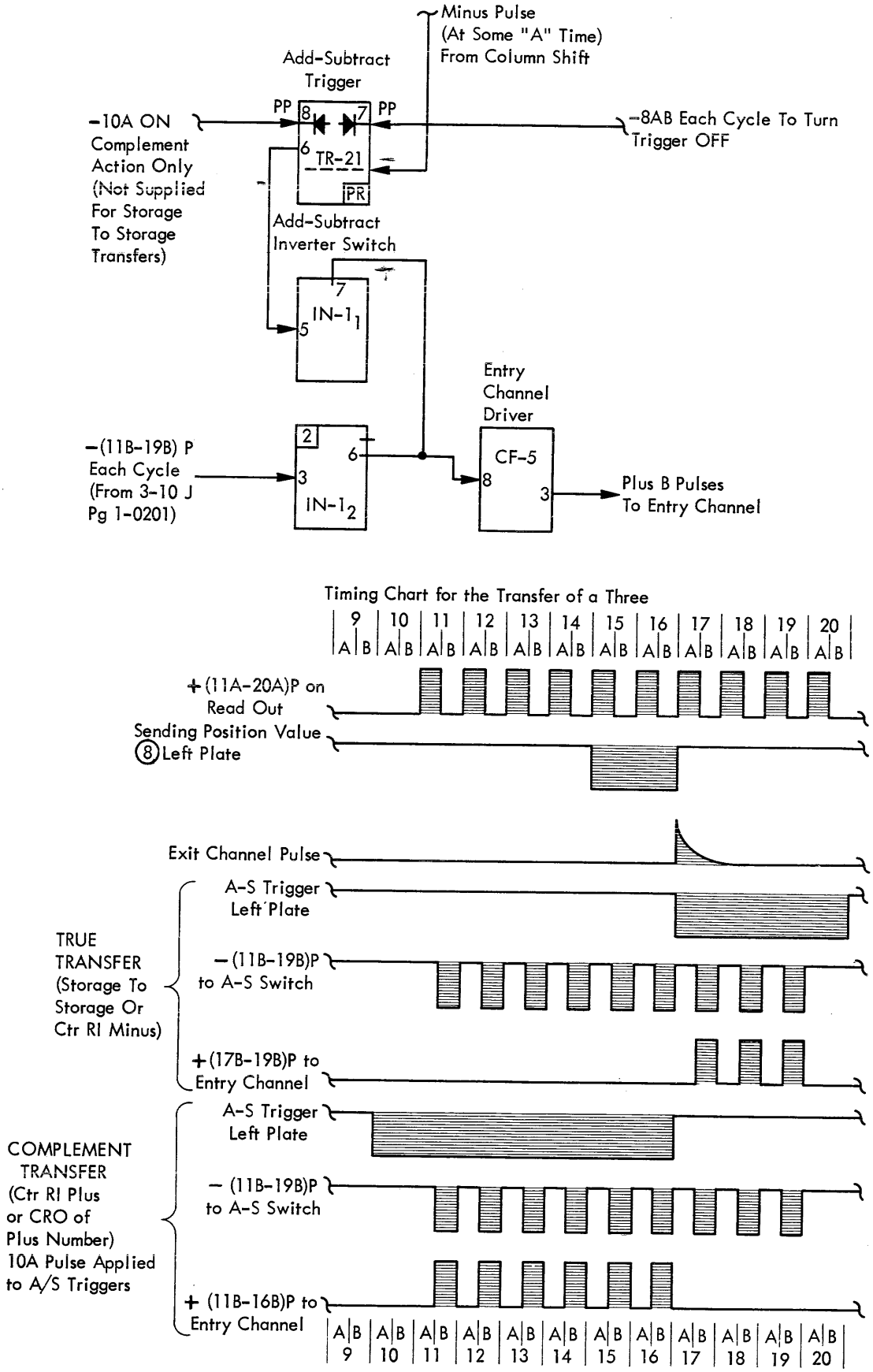

Figure 106. Add-Subtract Assembly Circuits and Timings (H Suffix)

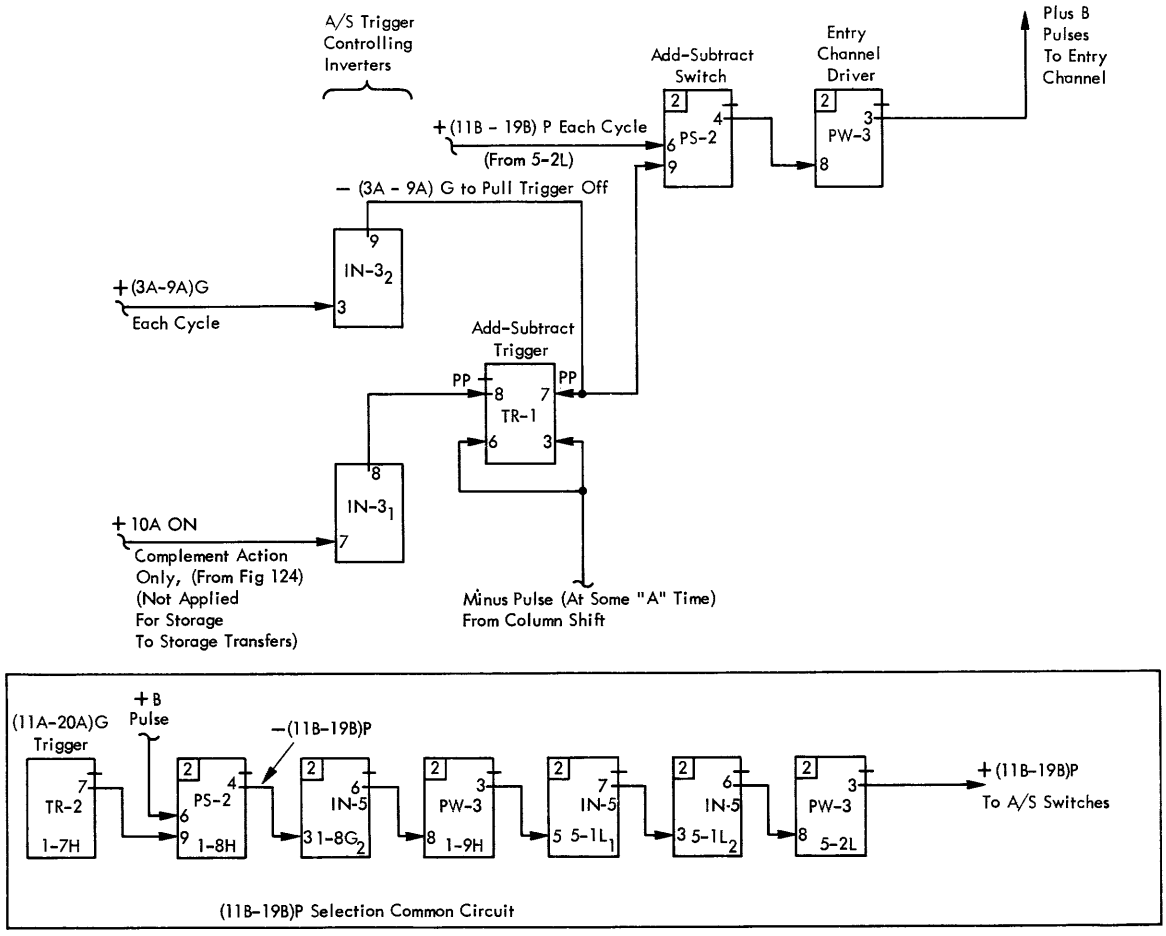

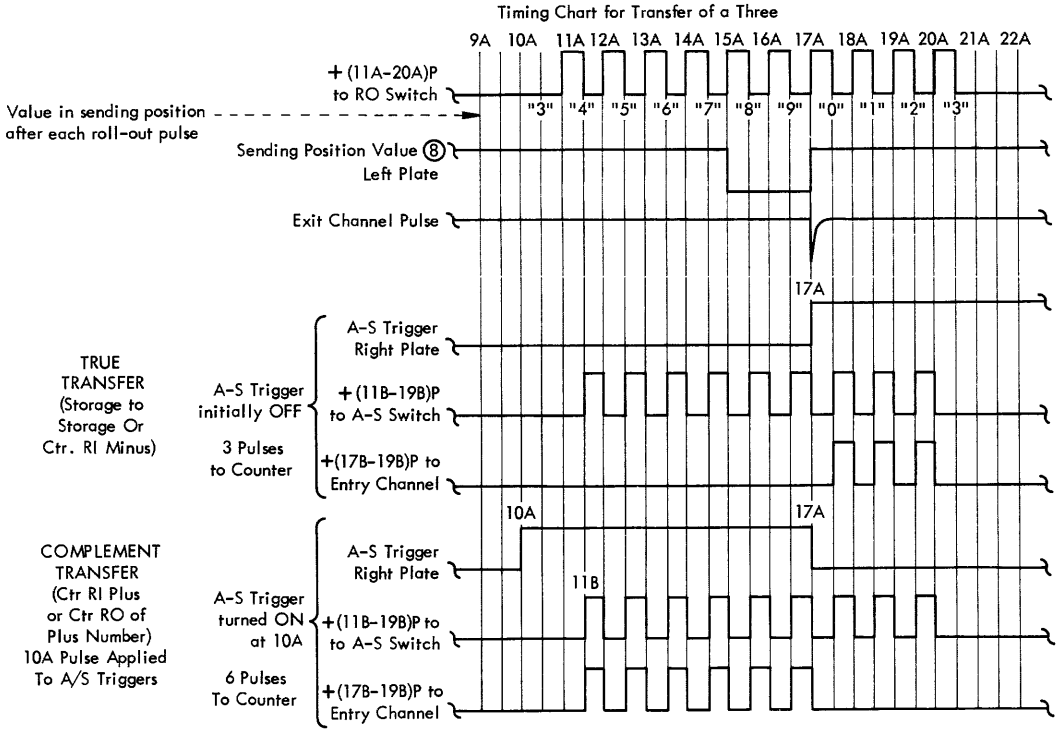

Figure 107. Add-Subtract Assembly Circuits and Timings (G Suffix)

The transfer of a zero results in no entry channel pulse at all. It is 20A before the sending unit rolls from 9 TO 0 to flip the add-subtract trigger. This is after the last read-in pulse, at 19B. Since Storage Units are automatically reset before read-in, the receiving position simply stays at zero, which is our objective.

The 8AB timing used to turn OFF the add-subtract triggers each cycle was not a chance selection. Receiving Storage Units are reset from 3A to 8B. (NOTE: This is a gate and therefore does not include 8B time.) The flipping of the receiving unit triggers during this reset time sends random pulses down the common exit channels. By pulling the add-subtract triggers to the proper, OFF position during 8AB time, after these stray pulses have disappeared, a reliable starting position for the add-subtract triggers is obtained.

G SUFFIX CIRCUITS (FIGURE 107)

The right plate of the add-subtract trigger controls the number 1 grid of the add-subtract switch. While the trigger is ON, the switch is primed to pass the plus 11B-19B applied to its number three grid each cycle. The resulting negative output pulses are inverted and fed to the entry channel by the power unit driver. The add-subtract trigger which controls the switch is binary connected. The trigger itself can be controlled from three sources: the two controlling inverters which plate pull the trigger to a proper starting position, and the grid input which flips it at the proper time. The trigger is plate pulled and held OFF *each cycle* from 3A until 9A to give the circuit a reliable starting status. Note that this controlling gate is ten microseconds longer than the 3A-8B gate which is used to reset the receiving Storage Unit. The resetting of the receiving unit sends random pulses down the common exit channels and to the add-subtract trigger grid inputs. By "plate holding" the add-subtract trigger OFF until the stray pulses have disappeared, reliable circuit operation is obtained.

The left plate can be controlled to pull the trigger to an ON status for what is known as a complement transfer (which will be discussed later). For the storage to storage transfer now being discussed this 10A shot is not applied. The add-subtract trigger therefore stays OFF until a grid input pulse is applied to it. This will occur when the sending unit rolls from 9 to 0 at some A time between 11 and 20. For example, if the sending unit held a nine the first roll-out pulse, at 11A, would advance the unit from 9 to 0 and send a reconstructed pulse down the exit channel slightly after the start of 11A time. This pulse will turn on the add-subtract trigger and condition the add-subtract switch to pass all following B pulses in the 11B-19B group. In this instance, all nine B pulses will pass through and appear on the entry channel. Any receiving unit will thus be advanced by nine, the value of the original sending unit digit. The true transfer portion of the timing chart in Figure 107 shows this operation for the transfer of a three. (The complement transfer timing will be discussed later.) The sending unit position continues to roll back to its original setting without producing further action on its exit channel.

The transfer of a zero results in no entry channel pulse at all. It is 20A before the sending unit rolls from 9 TO 0 to flip the add-subtract trigger. This is after the last read-in pulse at 19B. Since Storage Units are automatically reset before read-in, the receiving position simply stays at zero, which is our objective.

Complement Transfer (G & H)

The timing charts of Figures 106 and 107 show the timings involved for the transfer of a three. A transfer from storage to storage is always a true transfer, and this is what has been discussed up to now. It is possible, however, to convert to nines complement form any number group passing through the Add-Subtract Unit. The only circuit difference is the application of a 10A pulse to all the add-subtract triggers to plate pull them ON at 10A time. This conditions the add-subtract switches to pass the 11B-19B pulses UNTIL *sending unit exit channel pulses are received by and turn* OFF *the add-subtract triggers.* (On a true transfer, B pulses pass through an add-subtract switch AFTER an exit channel pulse reaches its add-subtract trigger.) An examination of the Complement Action timing charts will show that the entry channel will receive a number of pulses equal to the nines complement of any digit being transferred.

This "complementing" action is used under only two conditions:

1. When a plus entry is being made to the Counter. In the 604 Counter all plus entries are made as complements; minus entries as true figures.

2. When a plus (and therefore complement) figure in the Counter is to be transferred to a Storage Unit. (In the 604 all Storage Unit figures, whether plus or minus, are in true form.) In this case taking the complement of the complement number in the Counter will reconvert the digits to true form as they pass through the Add-Subtract Unit.

It is the true-complement trigger which internally controls the important 10A pulse. The TC trigger circuits will be discussed in connection with the Counter. At the moment it is important to note only the Add-Subtract Unit action produced by the 10A pulse.

Electronic Read-In (G & H)

With the Add-Subtract Unit supplying each entry channel with a number of plus pulses corresponding to the digit being transferred, the only problem remaining is to control a particular receiving unit to accept these pulses. It will also be necessary to cause an automatic reset of the receiving Storage Unit before the read-in pulses arrive. Figures 108 and 109 show the H and G suffix circuits. Both circuits use individual pentagrid switch units to control the passage of the entry channel pulses to the individual storage assemblies in the receiving unit. The few differences between the circuits stem largely from the fact that the H suffix machine produces a shift from its program exits of from minus 25 volts resting to plus 25 volts active where G and earlier machines go from plus 150 resting to plus 50 active.

H SUFFIX CIRCUITS (FIGURE 108)

The program exit level directly controls the number 1 grids of all the electronic read-in PS units through control panel wiring to the unit read-in hub. When the program exit is resting at minus 25 volts, the tubes are cut off. During active program time a plus 25 volts level on the number 1 grids primes the tubes to pass any entry channel plus pulses applied to any grid 3. Tapped outputs supply minus 40 volt pulses to the storage assemblies. Note that two other tube units are connected to each storage assembly input line for other operations. This fact may be important when analyzing certain troubles.

The automatic reset of the Storage Unit when told to read in results from the circuits at the bottom of Figure 108. The reset control PS unit is fed directly from the unit read-in hub on the 604 panel. A plus (3A-8B) Gate applied to grid 3 each cycle appears at the plate as a minus gate whenever a read-in operation is called for by control panel wiring. This is inverted and fed to the Electronic Reset circuit. This standard assembly is shown in Figure 77 and on *System* pages 3-0301 and 3-0302. Storage Units are reset to all zeros.

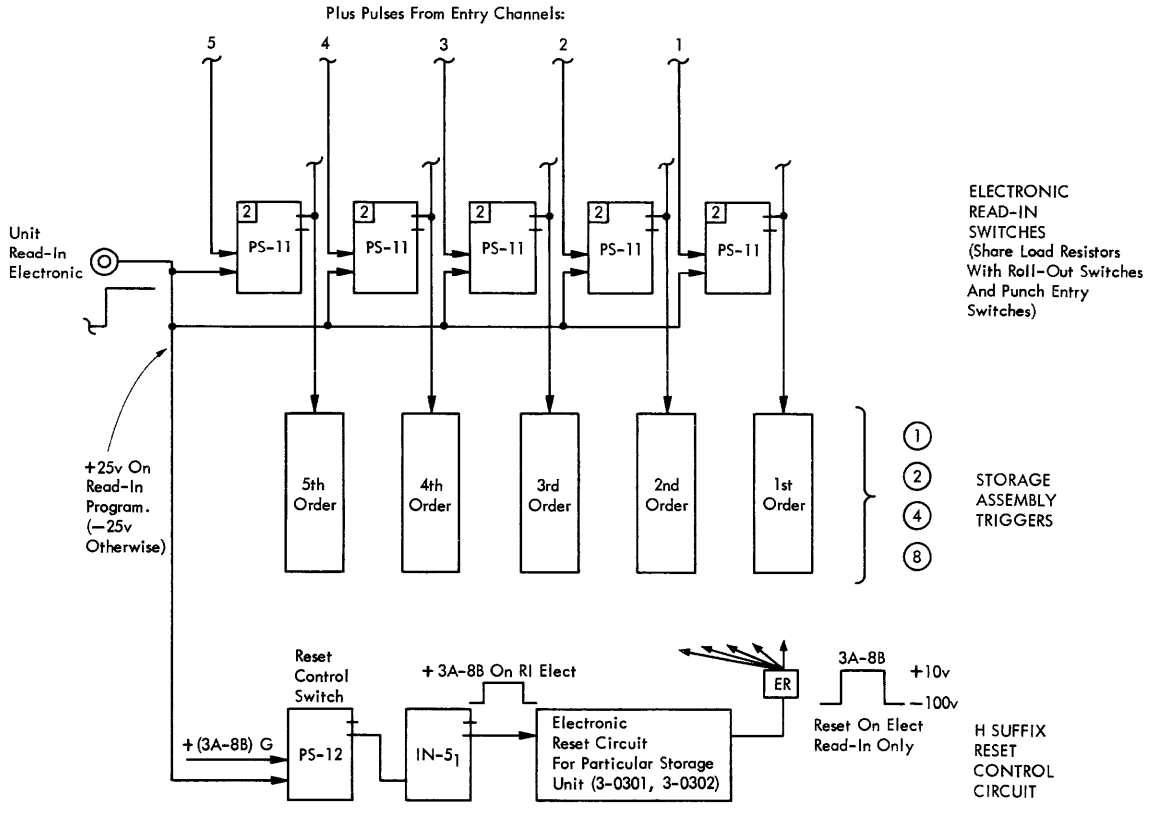

Figure 108. Read-In and Reset Control Circuits (H Suffix)

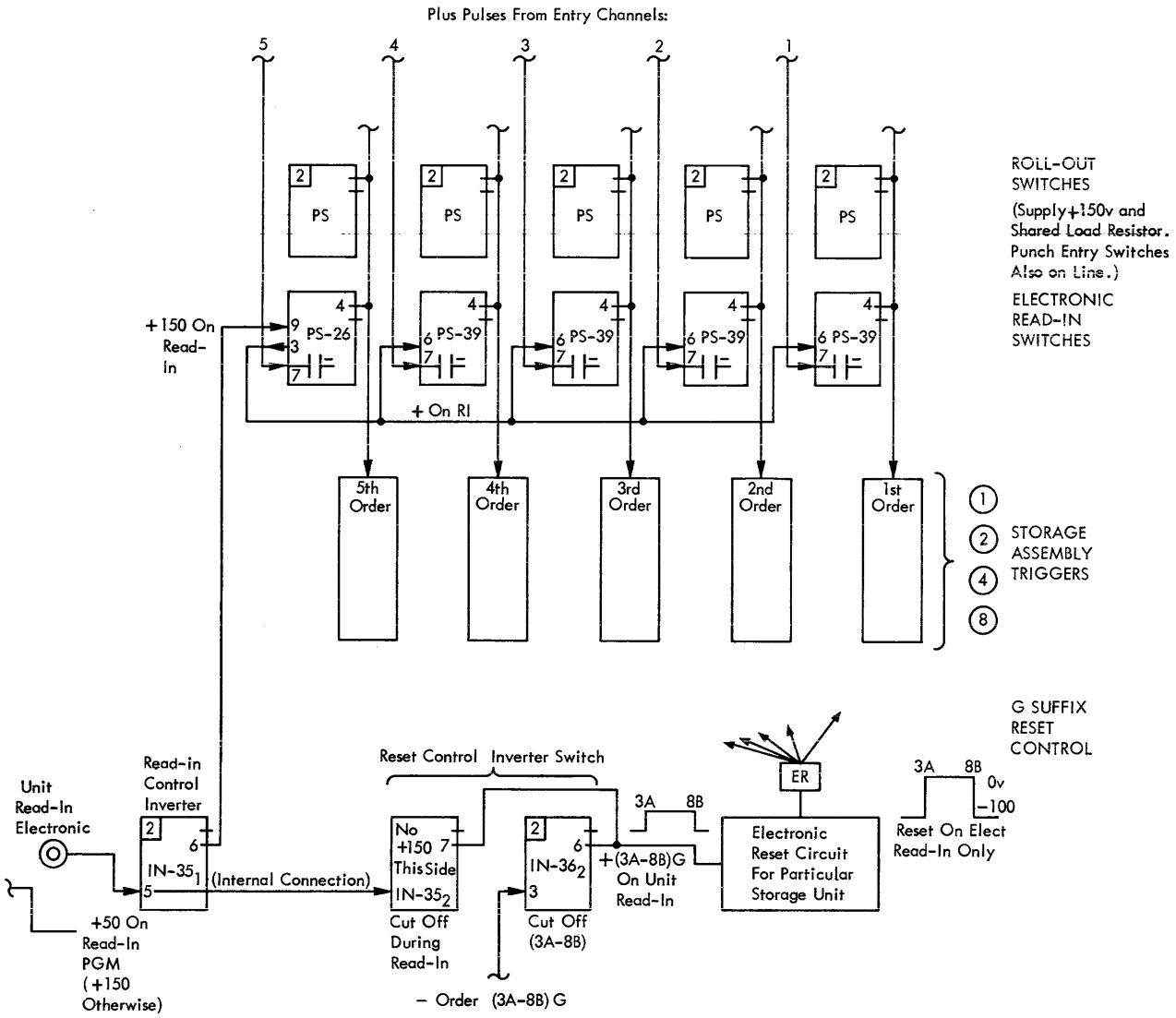

Figure 109. Read-In and Reset Control Circuits (G Suffix)

G SUFFIX CIRCUITS (FIGURE 109)

A control panel wire runs from the desired program exit to the desired unit read-in hub. The read-in control inverter normally conducts and produces a level of about plus 50 volts on its plate. This feeds to the electronic read-in master PS unit. A resistor network within this unit converts the plus 50 volt level to a minus 25 volts which is fed to the number 3 grids of the electronic read-in PS units within the Storage Unit. The tubes are thus cut off. When the program step becomes active, the input level at the read-in control inverter drops to 50 volts or less, cutting the inverter off. The resultant plus 150 volt plate potential conditions all the electronic read-in switches to pass any plus entry channel pulses applied to their number 1 grids. The grid 1 input capacitors provide DC isolation and have no other effect. Minus 40 volt, tapped output level pulses are fed to the storage assembly triggers. Note that each read-in switch gets its plate potential, and part of its plate load resistor, from the roll-out switch connected to each storage assembly input line. Punch entry switches are also connected to these lines.

The reset control inverter switch at the bottom of Figure 109 allows a 3A to 8B gate to be applied to the Electronic Reset circuit input automatically when the Storage Unit is told to read in. The right grid of the IN-35 unit is fed from the unit read-in hub through an internal connection to the left grid. The program step, when active, cuts off the tube. The IN-36 unit,

which makes up the second half of the inverter switch, is cut off from 3A to 8B. The combined plates can thus go plus from 3A to 8B of any read-in program. This gate, fed to the Electronic Reset circuit (Figure 77) causes the receiving Storage Unit to reset to all zero's.

Sign Transfer Channel Circuits (G & H)

The 604 is designed to accept and handle negative figures. This was discussed earlier under "Punch Read-In." Each Storage Unit has a sign storage trigger. A negative figure in the unit is indicated by the ON status of this trigger. When a transfer is programmed from one Storage Unit to another, the sign status must also be automatically transferred with the digits. A separate pair of sign transfer exit and entry channels has been included in the machine to make this possible. The general logic layout of the sign channel circuits is given by Figure 110. The sign channel does not pass through and is in no way controlled by the column shift, add-subtract unit.

If a unit is reading out, and if the sign storage trigger for that unit is ON, the common sign exit channel will be fed a shifted level from the unit sign exit switch. This shifted level will remain throughout the program step, and will condition the sign entry channel control

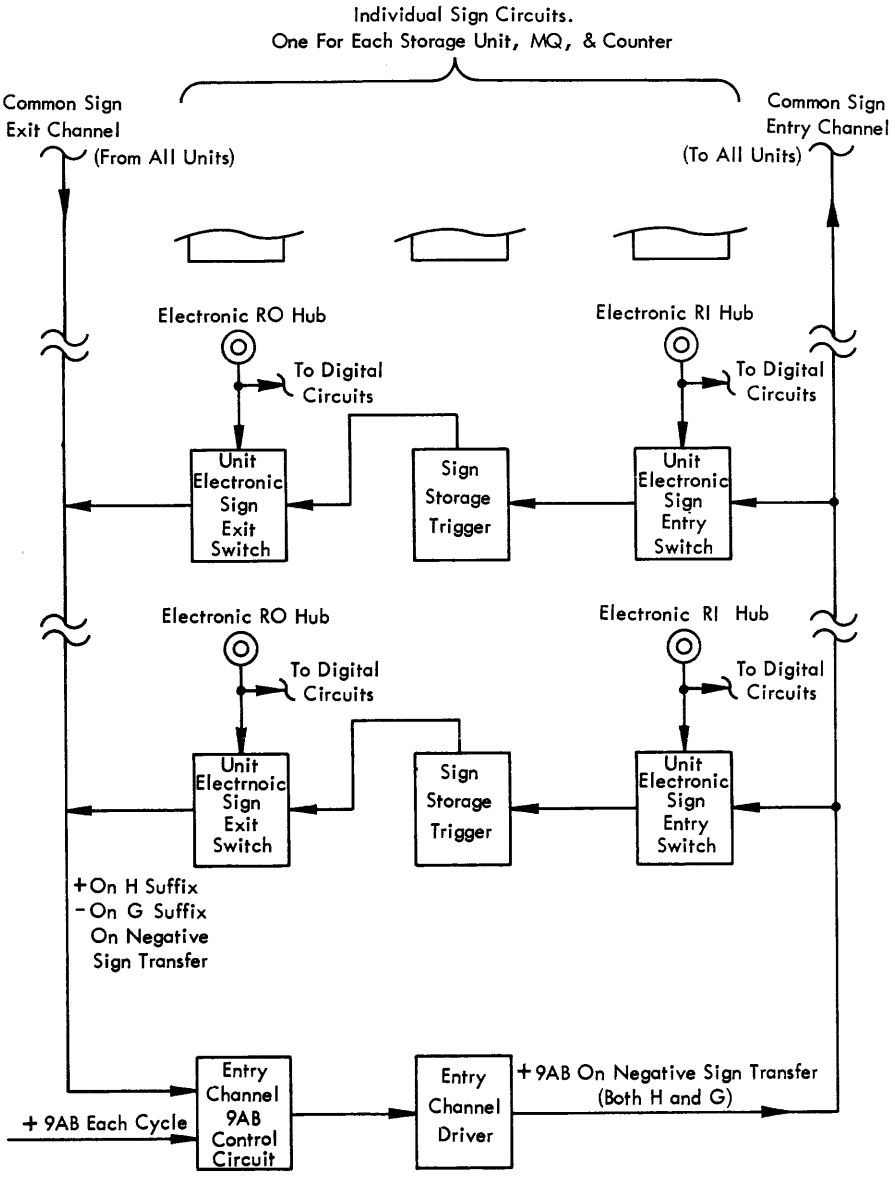

Figure 110. Logic Diagram of Sign Transfer Circuits (G and H)

switch circuits to pass a 9AB pulse to the sign entry channel driver. As a result, a plus 9AB pulse will be fed to the common sign entry channel whenever a negative figure is being transferred. This pulse feeds to all the unit sign entry switches, but is passed on to the sign storage trigger of only the storing unit being controlled to read-in. The sign storage trigger of the receiving unit is reset OFF by the same 3A-8B gate that resets the storage unit to zero. A 9AB pulse applied to the sign storage trigger will thus turn it on to indicate the negative nature of the received digits. There are differences of detail between th H and the G suffix machine circuits, therefore they will be discussed separately.

H SUFFIX CIRCUITS

OBJECTIVE: (Page 3-0201.) Shift sign exit channel to a plus level and transfer the negative sign when GS1 is programmed to RO and GS2 is programmed to RI. GS1 sign trigger 6E is assumed to be ON, indicating a negative stored figure.

1. $7E_2$ is conditioned by sign trigger.

2. $7E_1$ is conditioned by GS1 RO control panel wiring.

3. 7E output is fed through CF6 unit to sign exit channel and to sign control circuit, page 8-0103.

4. (Page 8-0103.) One grid of PS12 unit, 10M, conditioned by negative sign signal; a +9AB pulse conditions the other grid.

5. Negative output of 10M inverted and fed through a CF5 unit to the sign entry channel which feeds all units.

6. Plus 9AB from 3-11K feeds to all sign entry switches. GS2 RI control panel wiring; the other grid receives +9AB pulse from sign entry channel.

7. Negative output of 5F turns on GS2 sign trigger 6F.

G SUFFIX CIRCUITS

OBJECTIVE: (Figure 111.) Transfer negative negative sign when FS2 is programmed to RO and GS2 is programmed RI. FS2 sign trigger 4-7F is assumed to be ON, indicating a negative stored figure.

1. $4\text{-}8F_2$ is cut off from low output of left plate of sign trigger, 4-7F.

2. $4\text{-}8F_1$ is cut off when FS2 RO programmed by control panel wiring.

3. Combined plates of 4-8F shift positive. Channel driver inverter $4\text{-}9M_2$ conducts. Plate load and supply voltage for all sign exit channel drivers from IN-5 at $3\text{-}11J_2$. Sign exit shifts negatively, to plus 50 volts.

4. Inverter at $3\text{-}11J_1$ cut off, feeding positive output level to entry channel control switch 3-11L.

5. At 9AB 3-11L conducts, sending negative 9AB pulse to sign entry channel driver power unit 3-11K.

6. Plus 9AB from 3-11K, feeds to all sign entry switches.

7. GS2 sign read-in switch, 6-6F, conditioned positive on grid 3 by control panel programming. Plus 9AB on grid 1 causes minus 9AB output pulse.

8. Minus 9AB from 6-6F feeds right grid of GS2 sign storage trigger 6-7F, turning it on to indicate negative sign.

F SUFFIX AND EARLIER NOTE

Machines prior to the G suffix have a separate 9AB switch for each storing unit. The sign exit channel therefore receives a minus 9AB pulse rather than a shifted level whenever a negative figure is being transferred. The sign entry channel receives this as a plus 9AB, just as with the G and H machines.

Storage Assignment (G & H)

Provision has been made to allow coupling two 3 position Storage Units to form a signle 6 position unit, or to couple a 3 to a 5 position Storage Unit to form an 8 position unit. To do this, certain changes have to be made between the high order coupled storage unit and the exit and entry channels to which it is connected. The 5 position storage units are invariably connected to the first five channel positions. The 3 position storage units normally are connected to the first three channel positions, 1, 2 and 3, but can be connected to channels 4, 5, and 6, or to channels 6, 7, and 8 (abbreviated 4-6 assignment or 6-8 assignment). These changed connections are made by the four-position wire contact relays mounted within 604 panels 4 and 6 but controlled by hubs on the 521 control panel. Jackplugging the ASSIGNMENT hubs on the punch control panel allows the plus 48 volt punch power supply to pick the desired assignment relays. CALCULATE ON must be wired. The 1-3 ASSIGNMENT hubs are dummies. The assignment *cannot be altered during a calculation.* It is furthermore *not possible* to alter the assignment from card to card within a run through the use of selectors, rather than jackplugs, to the assignment hubs. All 521 Punch and Pilot selectors drop out at 13.0, the start of calculate time.

Figure 112 shows the relay circuits involved. If two three position storage units are to be coupled to make a 6 position unit, it doesn't make any practical difference which one is used for the high order. So, to save relays, only FS1 and GS1 are made assignable to the 4-6 channels. FS1 or GS1 will therefore be shifted whenever a 6 position storage unit is required. *All* the 3 position storage units *can* be assigned to the 6-8 channels, however. This allows four 8-position storage units to be created if desired.

When a three position storage unit is assigned away from its normal 1-3 channel connections, it is necessary to kill the sign exit and entry circuits for that unit (the low order storage unit to which it is coupled will retain the sign control function). A point on the assignment relays does this by opening and grounding the necessary sign circuit leads, as shown in Figure 112. In the 604H the electronic sign entry switch of the assigned unit is returned not to ground but to a minus

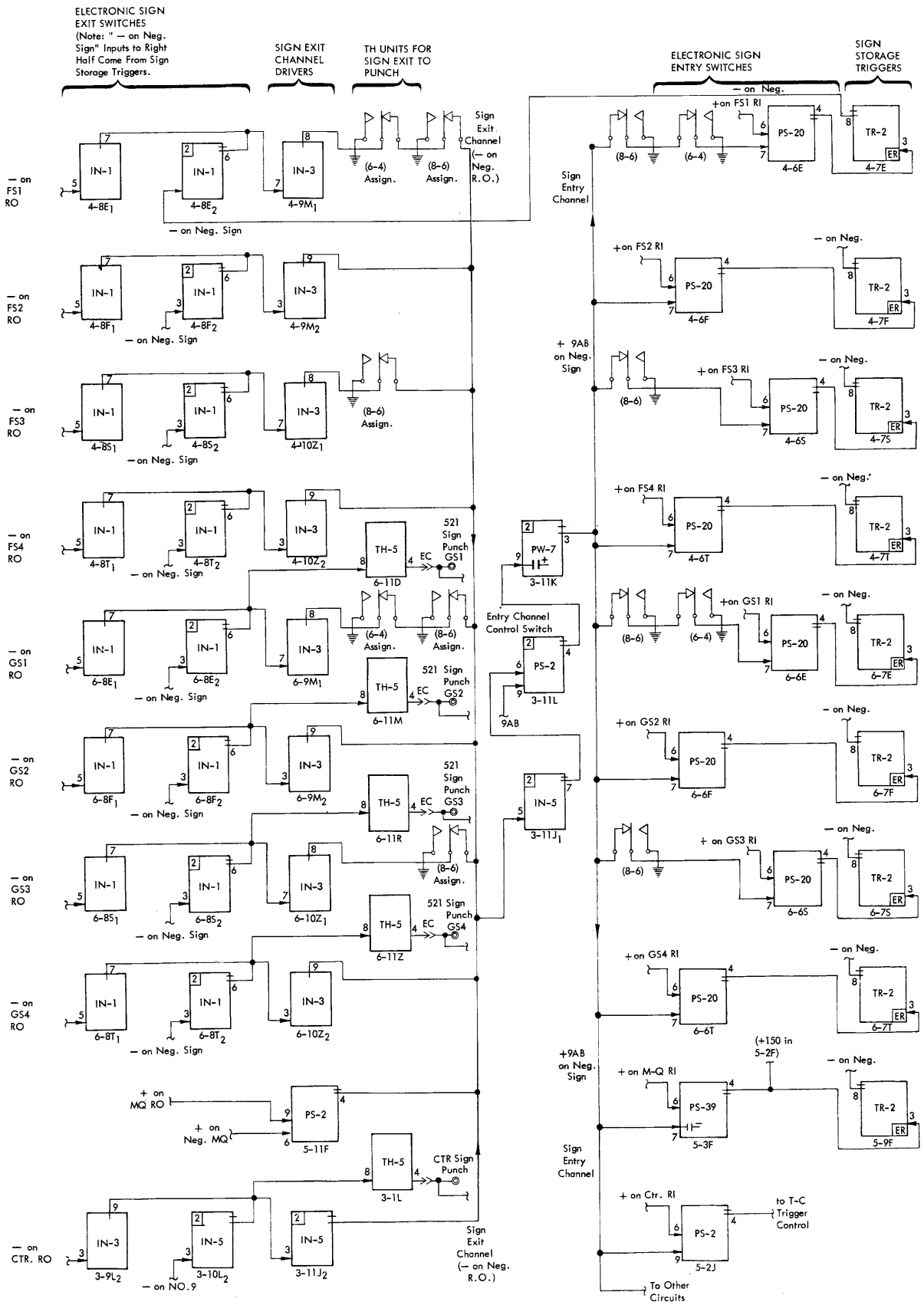

Figure 111. Sign Controls (G Suffix)

30 volt cutoff "sign clamp" potential. For the 604H the circuits can be traced on *Systems* pages 3-0101 through 3-0202. For the G suffix machine Figure 111 or the fan-fold machine print will provide additional details.

Note that picking the assignment relays only changes the connections between the storage unit and the common channels. The punch read-in and punch read-out circuits are not modified in any way. Another very important point to note is that the UNIT CONTROL READ-IN hubs and READ-OUT hubs, both on the 604 and the 521 panels, are NOT automatically joined; the control hubs for the coupled units must be externally wired together on the control panels so both units will do the same thing at the same time.

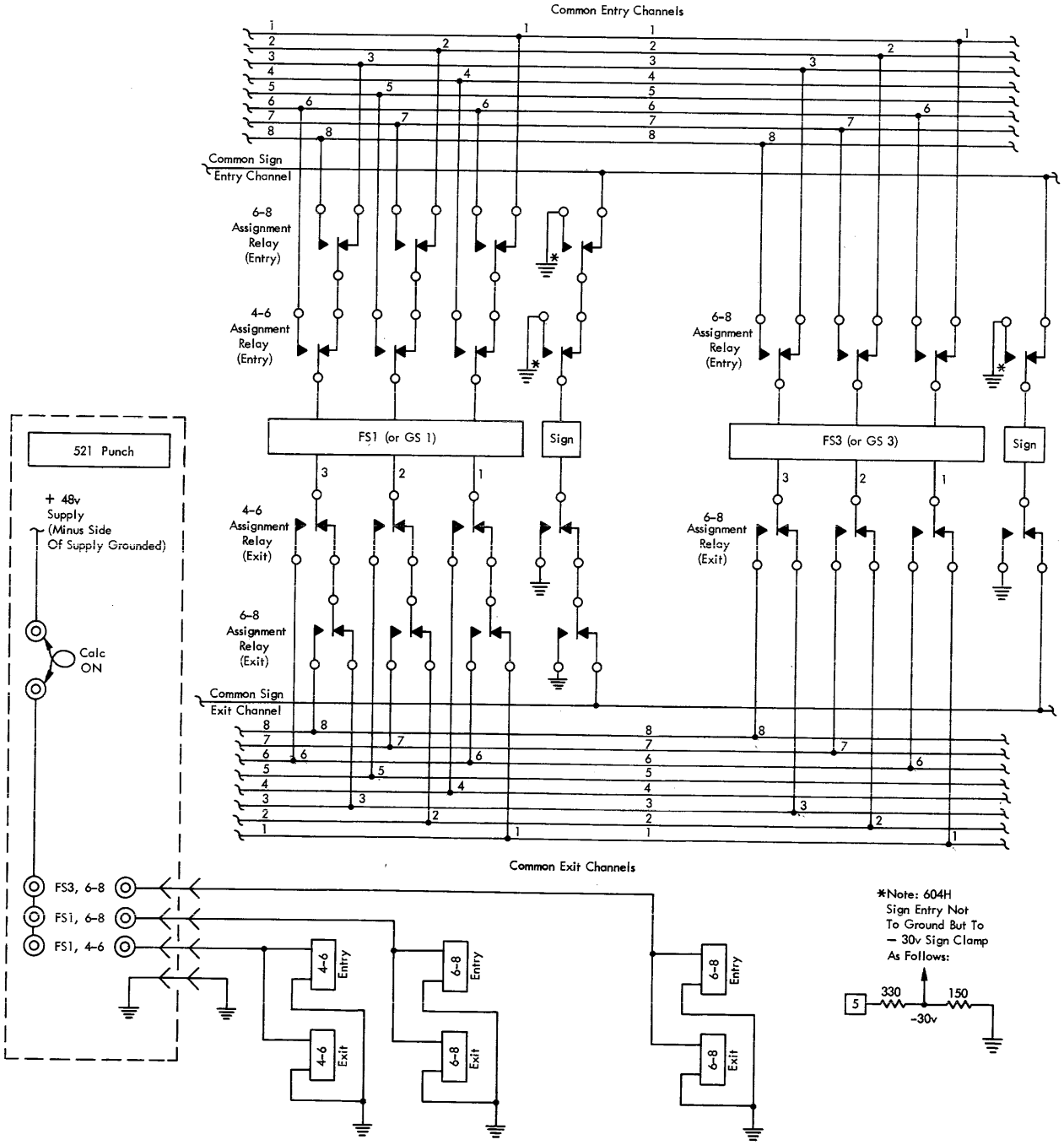

Figure 112. Storage Assignment Relays (G and H)

The Column Shift Unit (G & H)

The Column Shift Unit permits a shift in the placement of a number group as it transfers from one unit to another. For example, what reads out of the units position of the sending unit can end up in the second order (tens) position of the receiving unit (or the third or fourth or fifth or sixth order position, if desired). The shift unit is made up of 63 separate electronic switches electronically controlled to become effectively a thirteen pole, six-position switch. This is shown functionally by Figure 105. Unless controlled otherwise the switch is in its normal status, as drawn. The switch then passes exit channel 1 information to entry channel 1, exit channel 2 to entry channel 2, etc. In order to save tubes, the design of the shift unit only allows shifting digits to higher order entry channels. As drawn in Figure 105, the "ganged movable arms" of the switch can only be shifted to the right. However, an interesting arrangement of the Counter connections to the Column Shift Unit permits a shift in the other direction to be obtained by programming transfers through the Counter on two successive program steps. Note on Figure 105 that the 13th order counter exit position feeds common exit channel 8, the 12th order feeds channel 7, etc. The five low order positions of the Counter feed to separate switch "poles" not connected to any of the eight common exit channels. The common entry channels, on the other hand, feed to the Counter positions of the same order as the Storage Units. Five separate add-subtract assemblies are included which feed only the five highest order positions of the Counter. Figures 113 and 114 show larger overall views of this arrangement. Unless controlled otherwise, *the column shift switch automatically shifts over to its extreme, CS 6 position* (to the right in Figure 105) *whenever a Counter Roll Out operation is programmed.* In this way the units position of the Counter sends its information down entry channel 1, tens position down entry channel 2, etc. By 604 control panel wiring to the CS control hubs the column shift switch can be stopped at some intermediate position on a Counter Roll Out operation. For example if the CS unit is only allowed to shift over one position from normal (to CS2) on a Counter Roll Out, the fifth order counter digit will appear on entry channel 1 and the four low order positions will be sent into nothing. By reading into the Counter "straight through" on one program step and reading out of it with proper CS control wiring on the next, a "down shift" to a lower order position in the receiving unit can be obtained.

Once the functions and possibilities of the Column Shift Unit are understood, the switching circuits and the controlling circuits can be readily seen. The terms Column Shift position 1, CS 2, CS 3, etc., are used by Customer Engineering to denote the switch "position," but do not appear in that form on the 604 control panel. The control panel hubs are labeled to aid customers, who wire by function. The control panel terms relate to Counter operations. A translation table follows:

POSITION OF SHIFT UNIT	CONTROL PANEL TERMINOLOGY	
	Read Units Into:	Read Units Out of:
CS1	(Normal, No Hub)	6th
CS2	2nd	5th
CS3	3rd	4th
CS4	4th	3rd
CS5	5th	2nd
CS6	6th	(Normal Ctr RO, No Hub)

NOTE: Control Panel Hubs producing the same CS position (such as RUI 2nd and RUO 5th) are simply commoned behind the fixed control panel.

During multiplication and division, internal circuits assume control of the Column Shift Unit. Therefore no external column shift control wiring is permitted on the control panel from any program step used for multiply or divide.

The circuit arrangement of the 63 electronic switch tubes that make up the Column Shift can be seen on *System* page 6-0101 for the H suffix machine or on Figure 114 for the G and earlier machines. The arrangement of the units on both page 6-0101 and on Figure 114 is similar to the physical arrangement of the units in the specific machines. The H suffix column shift is in panel 3; exit channel data flows in at the top and down to the Add-Subtract Unit at the bottom. The G suffix column shift is in panel 5; its exit channel inputs come in at the bottom and flow upward to the Add-Subtract Unit at the top. The H suffix machine uses triode switches; the G suffix uses pentagrid switches.

Except for the inverted physical arrangement of one circuit, both the H and G column shifts have the same general data flow wiring arrangement. This is more clearly shown by the G suffix drawing, Figure 114, and for this reason the G circuit will be used for our general discussion. Peculiarities of the H circuit will be discussed later.

As shown by Figure 114, there are six horizontal rows of switch tubes. Each of these rows is supplied by a separate horizontal column shift control line. On any one primary timer cycle only one of these rows is

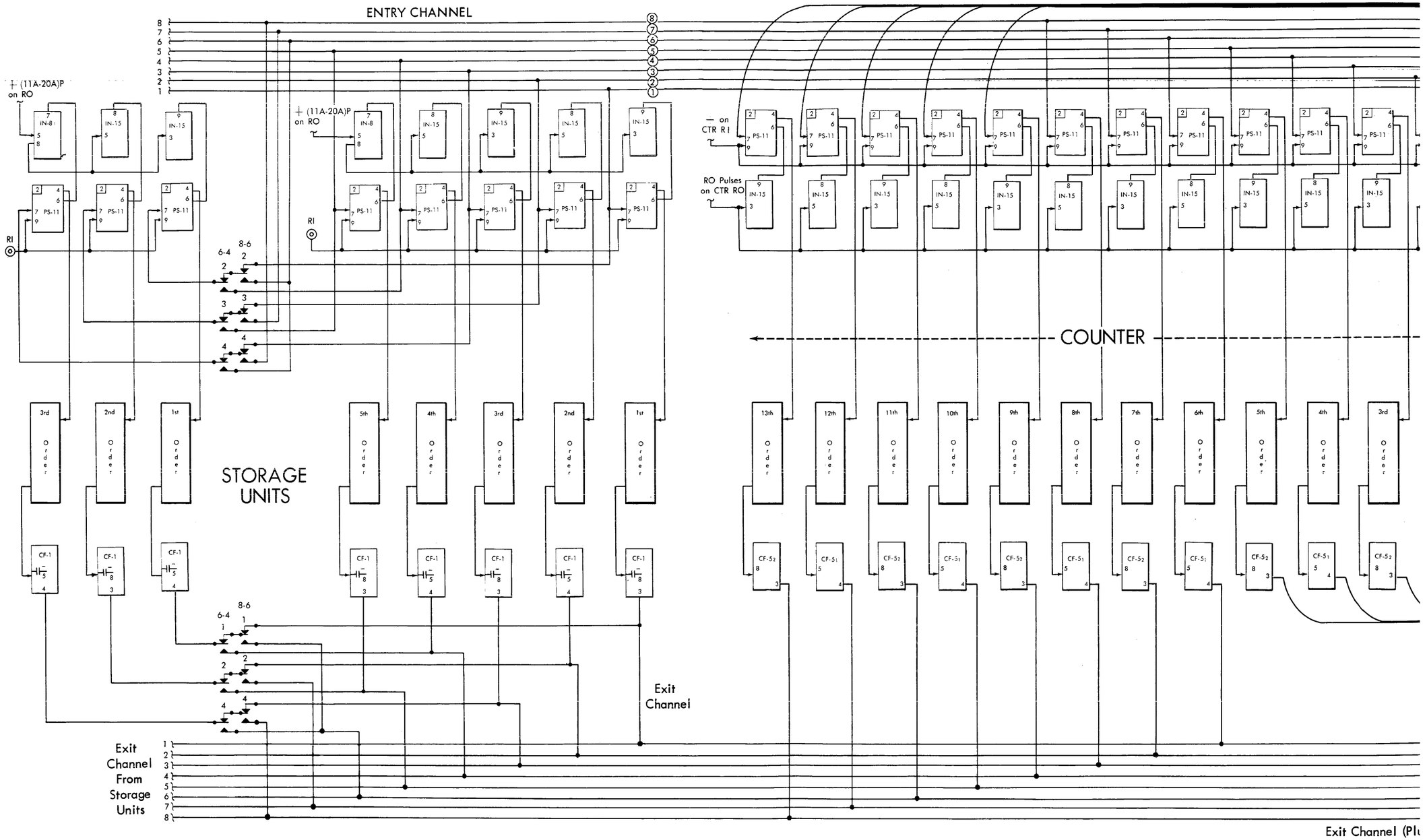

Figure 113. Electronic Transfer Circuits Logic Diagram (H Suffix)

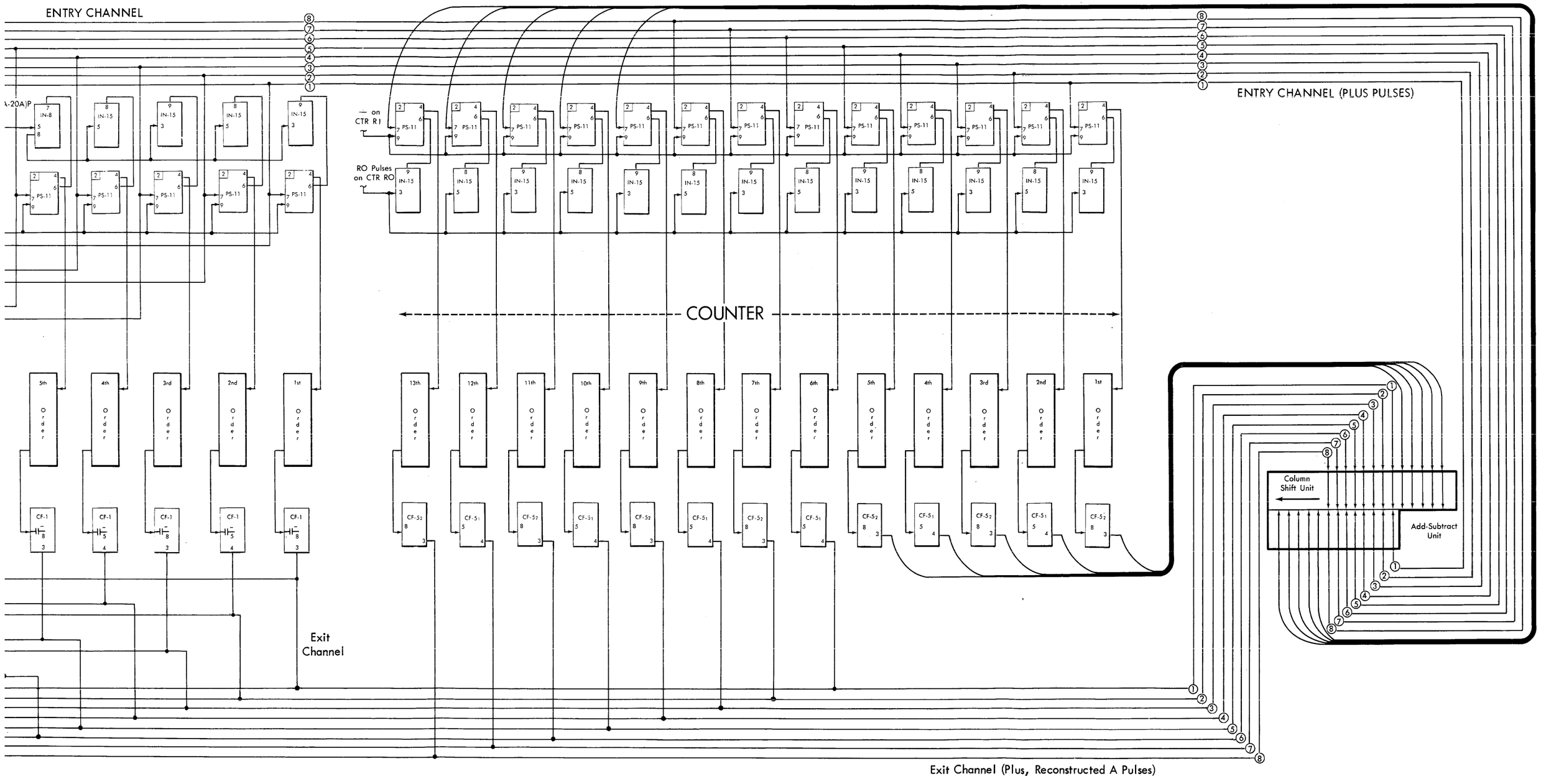

Transfer Circuits Logic Diagram (H Suffix)

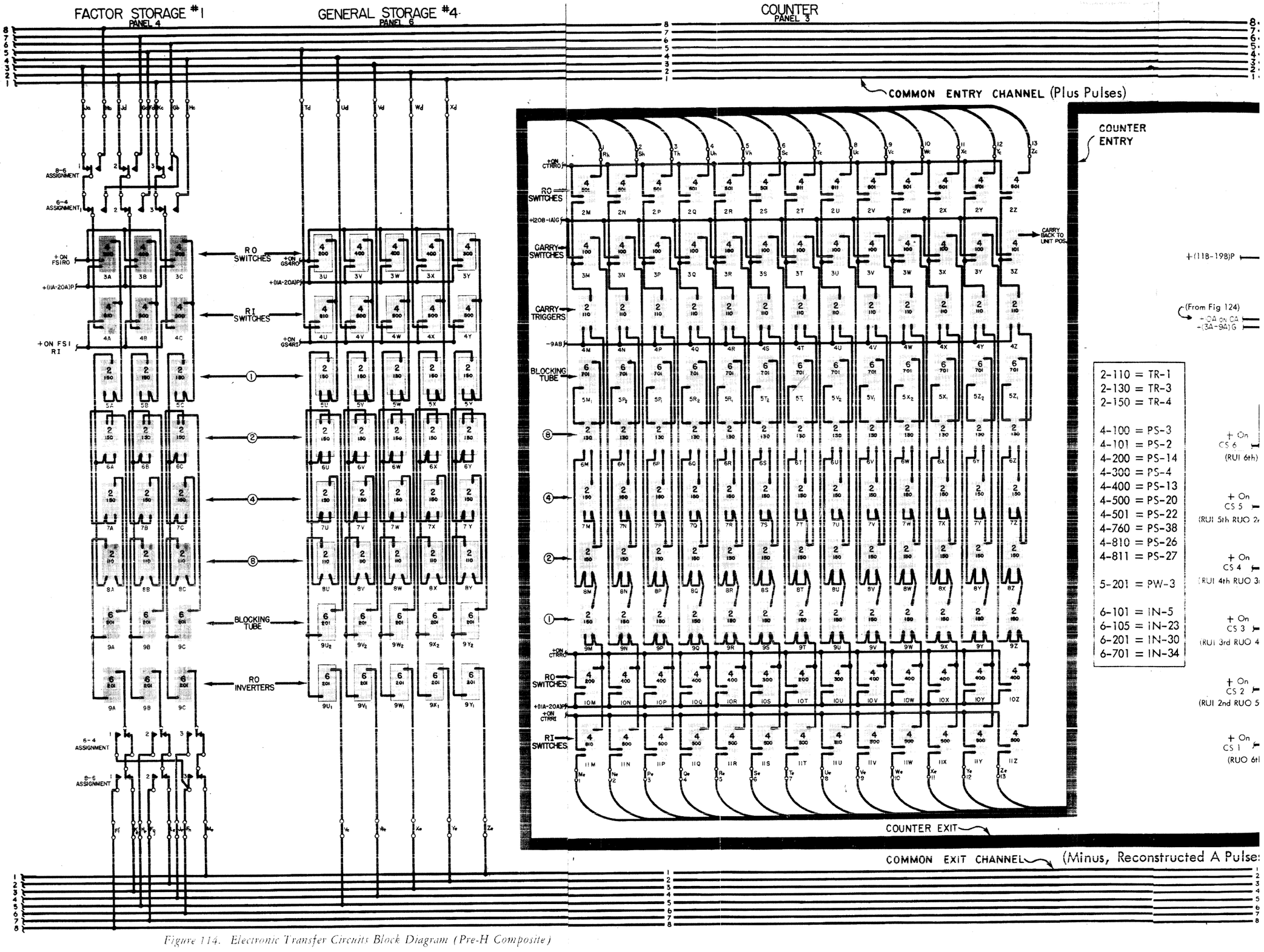

Figure 114. Electronic Transfer Circuits Block Diagram (Pre-H Composite)

TER
L 3

' COLUMN SHIFT SWITCHES AND ADD-SUBTRACT CIRCUIT
PANEL 5

COMMON ENTRY CHANNEL (Plus Pulses)

COUNTER ENTRY

CARRY BACK TO UNIT POS.

+(11B-19B)P

(From Fig 124)
+10A on CA
-(3A-9A) G

T On CS 6 (RUI 6th)

+ On CS 5 (RUI 5th RUO 2nd)

+ On CS 4 (RUI 4th RUO 3rd)

+ On CS 3 (RUI 3rd RUO 4th)

+ On CS 2 (RUI 2nd RUO 5th)

+ On CS 1 (RUO 6th)

2-110 = TR-1
2-130 = TR-3
2-150 = TR-4

4-100 = PS-3
4-101 = PS-2
4-200 = PS-14
4-300 = PS-4
4-400 = PS-13
4-500 = PS-20
4-501 = PS-22
4-760 = PS-38
4-810 = PS-26
4-811 = PS-27

5-201 = PW-3

6-101 = IN-5
6-105 = IN-23
6-201 = IN-30
6-701 = IN-34

ADD-SUBTRACT EXIT POWER TUBES AND INVERTERS

ADD-SUBTRACT SWITCHES

ADD-SUBTRACT TRIGGER CONTROLLING INVERTERS

ADD-SUBTRACT TRIGGERS

COMMON PLATE LOAD AND PLATE VOLTAGE FOR EACH DIAGONAL LINE ARE IN ROW 5 UNITS

COLUMN SHIFT SWITCHES

COLUMN SHIFT INPUT INVERTERS

COUNTER EXIT

COMMON EXIT CHANNEL (Minus, Reconstructed A Pulses)

Notes:
4-200 Units (PS-14) are Grid 1 Masters
4-300 Units (PS-4) are Grid 3 Masters
4-400 Units (PS-13) are Grid Slaves With Built-In Plate Loads
4-760 Units (PS-38) are Complete Slaves

Electronic Transfer Circuits Block Diagram, G and Earlier Suffixes.

primed grid 3 plus to pass grid 1 plus pulses. Notice how the exit channel information is fed to the switch tubes in separate vertical columns. It is the diagonal lines that feed the output of the switch tubes to the add-subtract triggers. On any one cycle the pulse from any one exit channel will be able to pass through only one switch tube and appear on only one diagonal output line to control only one add-subtract trigger. The diagonal line on which an exit channel pulse will appear depends upon which of the six horizontal rows of switch tubes is primed grid 3 plus by a horizontal control line. For example, let's take common exit channel 1 which passes through the column shift input inverter $11T_2$ and feeds plus pulses to the six switch tubes in column S. If we are in CS 1, only switch tube 10S will pass the pulse to its plate. The pulse (now negative) will move along the diagonal and flip the A/S trigger 4M which controls entry channel 1. If we are in CS 2, switch tube 9S only will pass the exit channel 1 pulse to its plate. The pulse will now flow along the diagonal to the A/S trigger 4N which controls entry channel 2. And so on for the remaining four column shift control positions. For any column shift control position each of the other exit channels is simultaneously shifted in parallel with exit channel 1. Referring again to Figure 105 for the functional objective of the circuit may be helpful at this time.

Except for the use of triode switches rather than pentagrid switches and the fact that data flows from top to bottom, the principles of the 604H circuit, *System* page 6-0101, are identical.

G SUFFIX CIRCUIT NOTES

To maintain greatest layout clarity the block diagram of Figure 114 has been simplified in a few areas. An examination of the machine fan-fold print will reveal extensive use of slave units for both PS unit grids and for the plate circuit.

This specific wiring has not been shown:

1. The plate supply and plate load return resistor for any diagonal line is in the PS units at 5M through 5Z. Pulling any one of these units will kill an entire diagonal.

2. In any vertical column the column shift input inverter feeds a type 4-200 (PS-14) grid 1 master unit. The 4-200 unit feeds the shifted signal level to all other (slave) units in that column. The location of these master units varies slightly in some columns, but can be obtained from the actual print or from Figure 114. Pulling one of these master units will kill an entire column.

3. In any horizontal row there will be found two type 4-300 (PS-4) grid 3 master units which feed column shift control levels to the grid 3 slaves to the right of the master. (The tubes at 5M, 6N, 7P, 8Q, 9R and 10S are grid 3 slaves which are exceptions to this. They are located alongside of and to the *left* of their masters. Pulling one of the master units will kill part of an entire row.)

4. The foregoing notes can facilitate circuit trouble diagnosis. If any master unit is pulled, an area of the circuit is killed. By pulling just the tube from the unit (leaving the unit in the machine) a specific switch can be killed even if it is a master. Interelement tube shorts can affect an entire column, row, or diagonal and may even appear as a failure only in a position NOT containing the short. A DC oscilloscope that will check pulse shapes and steady line levels is very helpful with this type of trouble. A constant awareness of the number of interconnected units should be maintained when working in the column shift area. A failure can frequently be localized to a particular row, column or diagonal by programming a number group transfer in various shift control settings. Replacing individual tubes one at a time will then pin point the trouble.

H SUFFIX CIRCUITS (6-0101)

The triode switches used in the 604H column shift were discussed in the electronics chapter of this book. To obtain an output shift from the plate, a plus level must be on the grid input and a minus level on the cathode input. As shown on *System* page 6-0101 the column shift control voltage is applied to the grids of the horizontal rows. The exit channel pulses are applied as negative pulses to vertical columns of cathodes. The diagonal lines connecting the plate supply minus pulses to the add-subtract triggers.

The plus pulses from the exit channels are inverted by the column shift inverters and fed to the column shift input cathode followers. The cathode followers supply sufficient power to drive the triode switches and also set the signal level to the plus 25 to minus 15 volt shift required by the cathode input of a triode switch.

The "plus on CS 1 through 6" lines come into the page from 6-0201 at the cathode level. The line being used will be at about plus 25 volts; all the other input lines will be at minus 25 volts. Note that each of these input lines feeds to an IN-18 grid master before being

applied to the rest of the switch tubes in the horizontal row. Circuits within the master unit convert the cathode level input to the switch level (0 volts active, minus 40 volts for cut off) required on triode switch grids for proper operation. If a master (IN-18) unit is removed from the circuit during trouble analysis, one entire row of switches will be killed. If only the dual triode tube is removed from the unit, leaving the unit in the machine, only two positions in the same *column* will be killed.

Each diagonal plate line that feeds an add-subtract trigger has its plate supply and plate load resistor in only one IN-16 plate circuit master unit per line. If this master unit is removed from the machine, an entire diagonal circuit will be killed. Removing just the tube from the unit will kill only two positions in the same column. Except for the units at $6P_1$ and $6Q_1$, all the plate circuit master units are in row 8 from M through Z.

Within the Column Shift Unit an interelement tube short can affect an entire row or column or diagonal. The trouble may even show only in a position not containing the short. Using the oscilloscope and trying a repeated transfer of a large number group while in various column shift settings will frequently isolate the trouble to a common line. After that, one by one replacement of each tube or unit along this line will pin point the failure.

Column Shift Control (G & H)

The Column Shift Control circuit sets the voltage levels applied to the horizontal rows of switch tubes in the Column Shift Unit. The requirements of this control circuit are as follows:

1. Unless controlled otherwise, the unit must always activate the CS 1 position.

2. The unit must be able to shift to CS6 and therefore deactivate CS1 whenever a Counter Roll Out operation is programmed.

3. Control panel wiring must be able to take precedence over the preceding conditions, suppressing any internally called for shift and activating any desired shift (only one shift line must be active at a time).

4. During multiply and divide, internal electronic circuits (the tertiary timer) must be able to control the Column Shift Control Unit. (Column shifts must not be control panel wired on a multiply or divide program step.)

The circuits for obtaining these identical objectives are different from the H suffix and the G suffix machines. They will therefore be discussed separately. A brief discussion of the F suffix and earlier variations is also included.

H SUFFIX CIRCUITS (PAGE 6-0201)

All the controls affecting the shift unit are shown on page 6-0201. The tertiary timer also controls the shift unit during multiply and divide operations, and is shown on the same page. The tertiary timer provides automatic shifting during multiplication or division only; it is not used at any other time and all the ring triggers of the tertiary timer are normally OFF. Column shift must not be wired during a multiply or divide program.

NORMAL OPERATION, CS1

OBJECTIVE: (Page 6-0101.) Develop a "+(c) on CS1" voltage to be fed to page 6-0101 when no column shift is wired and there is no Counter RO.

1. $4N_2$ grid negative, no CS2 wired.
2. $5N_1$ grid negative, no CS3 wired.
3. $4N_1$ grid negative, no CS4 wired.
4. $5N_2$ grid negative, no CS wired.
5. 4M and 5M grids 1 positive.
6. $6L_1$ conducts, no -(c) on CTR RO or CTR RO and R.
7. 4M cannot conduct.
8. $11L_2$ grid negative, no CS6 wired.
9. 5M conducts from 7 and 8 above.
10. Negative output of 5M inverted and fed through a CF5 unit to 6-0101 as +(c) on CS1 voltage.

COUNTER RO, CS CONTROLS

OBJECTIVE: (Page 6-0201.) During counter read-out operations prevent CS1 signal and develop "+(c) on CS6" voltage with no shift wired.

1. -(c) on CTR RO or CTR RO and R from the counter, page 4-0101, is inverted and conditions grid 2 of 4M.
2. 4M grid 1 is positive if no shifts are wired; therefore 4M conducts.
3. Negative signal from 4M is inverted and fed through a CF5 unit to 6-0101 as "+(c) on CS6" voltage.
4. 4M conducting conditions 5M grid 2 negative to prevent a "+(c) on CS1" voltage.

PANEL CONTROLS FOR CS2-CS5

OBJECTIVE: (Page 6-0201.) When a shift is wired, to signal a corresponding CS voltage to the column shift unit, page 6-0101, and prevent the CS1 signal.

1. A +CS voltage is fed to column shift unit from control panel hub when CS2, CS3, CS4 or CS5 is wired.
2. $4N_1$, $4N_2$, $5N_1$ or $5N_2$ conducts and cuts off 4M and 5M.
3. Positive input from 5M prevents CS1 signal.
4. Positive output from 4M prevents CS6 signal.
5. NOTE: Turning on a tertiary timer CS5 through CS2 trigger will produce the same effect as a corresponding program control entry. This allows tertiary timer to assume CS control during multiply or divide.

Panel Controls for CS6

Objective: (Page 6-0201.) Signal "+(c) on CS6" to the column shift unit and prevent CS1 signal.

1. $11L_2$ conducts when CS6 is wired.
2. 5M cuts off to prevent CS1 signal.
3. $11L_1$ cuts off and a + on CS6 signal is fed through CF5 unit to column shift, unit, page 6-0101.

G Suffix Circuits (Figure 115)

All the controls affecting the shift unit are shown on Figure 115. The tertiary timer triggers control the unit during multiply and divide operations but are not used at any other time. All the triggers are therefore nor-

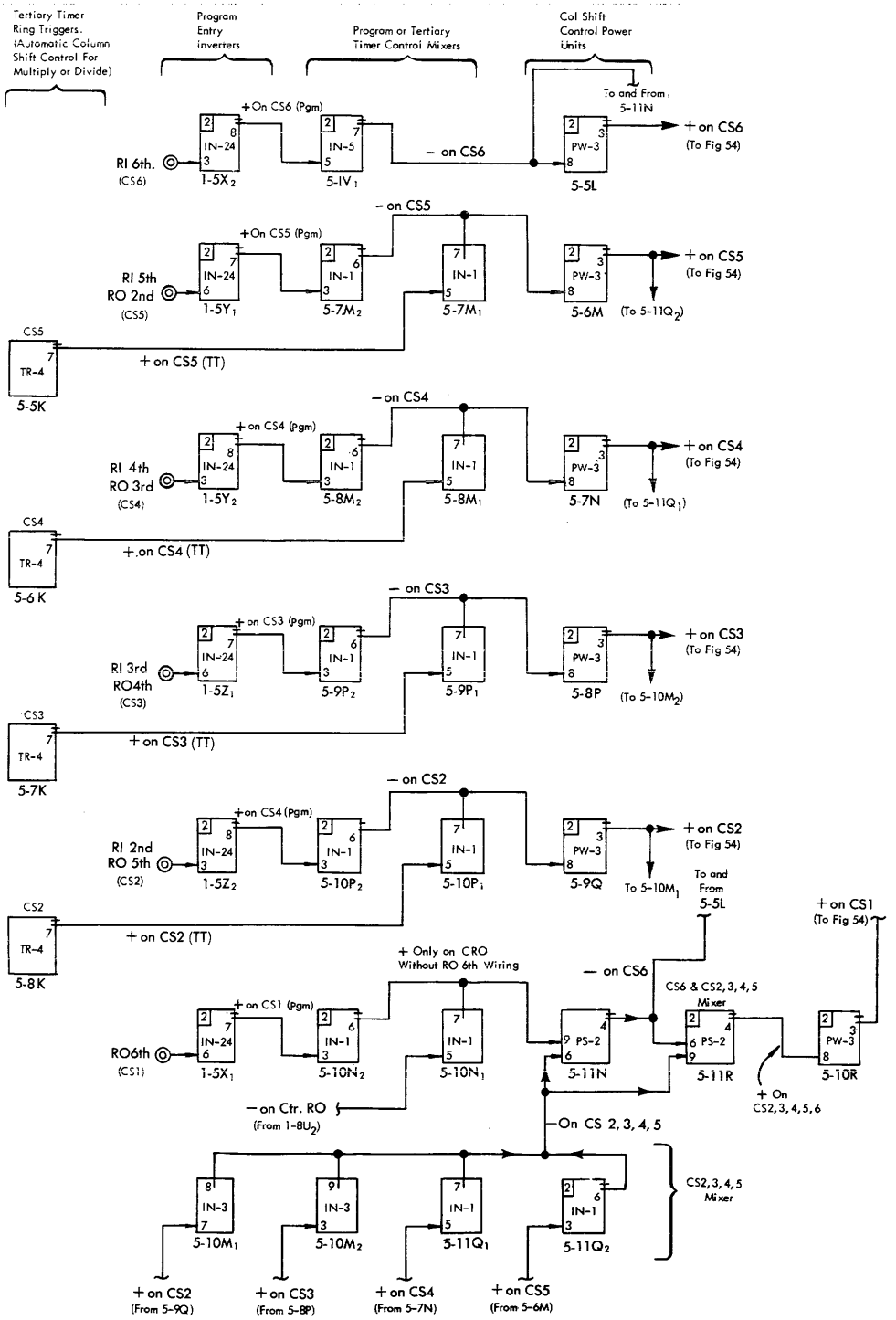

Figure 115. Column Shift Controls (G Suffix)

mally OFF and do not affect the controls. The triggers are shown merely to indicate their tie-in to the circuit. Column shift control panel hubs must not be wired on any step used for multiply or divide.

PANEL CONTROLS FOR CS2, 3, 4, OR 5

OBJECTIVE: Activate the desired CS line; kill the CS1 line.

1. A minus shift from PROGRAM EXIT into CS2, 3, 4, or 5 hub cuts off program entry inverter 5-5Y_1, 5Y_2, 5Z_1, or 5Z_2.

2. Plus output from inverter makes left half of corresponding "pgm or tert timer mixer" conduct.

3. Negative output from combined mixer plates cuts off corresponding column shift control power unit, producing plus output which feeds to number 3 grids of corresponding row of CS unit pentagrid switch tubes.

4. TO KILL CS1 LINE the plus on the particular column shift level is fed to corresponding tube in the "CS2, 3, 4, 5" mixer 5-10M_1, 10M_2, 11Q_1 or 11Q_2.

5. Minus output from combined mixer plate line cuts off PS unit at 5-11R.

6. Plus output from 5-11R makes 5-10R conduct, dropping level of CS1 line and deactivating column shift switch tubes in that row.

7. NOTE: In step 2, turning on a Tertiary timer trigger will produce the same effect at combined plates of "pgm or tert timer mixer" as a program entry. This allows tertiary timer to assume column shift control during multiplication and division.

NORMAL POSITION IN CS1

OBJECTIVE: Leave "Plus on CS1" line high when no other controls are active.

1. To get desired plus on CS1 level, 5-10R must be cut off.

2. To cut off 5-10R, 5-11R must conduct. Both 5-11R grids must therefore be plus.

3. Grid 1 of 5-11R is plus because none of the "CS2, 3, 4, 5 mixers" are conducting (no CS controls are activated).

4. Grid 3 of 5-11R is plus because both 5-11N and 5-1V_1 (at the top of the illustration) are cut off.

5. 5-11N is cut off because its grid 3 is minus due to conduction through 5-10N_2 (5-10N_2 is only cut off on a CRO operation).

6. 5-1V_1 is cut off because RI 6th is not wired. 1-5X_1 therefore conducts and cuts off 5-1V_1.

AUTOMATIC CS6 ON CTR RO

OBJECTIVE: Activate CS6 on CRO. Kill CS1.

1. To get plus on CS6, 5-5L must be cut off. Minus input to grid from 5-11N which is conducting.

2. 5-11N conducting because both grids are positive. Grid 1 positive because no tube in "CS2, 3, 4, 5 mixer" is conducting (no other controls wired). NOTE: If other controls wired on a CRO, CS6 will be killed. 5-11N will be cut off because of conduction through "CS2, 3, 4, 5 mixer" or because of conduction through 5-10N_2 if RO 6th wired.

3. Grid 3 of 5-11N positive because 5-10N_1 and 5-10N_2 are cut off. Combined plates go plus.

4. 5-10N_1 cut off from minus on Ctr RO level from 1-8U_2.

5. 5-10N_2 cut off because RO 6th not wired. Minus output from 1-5X_2 therefore cuts off 5-10N_2.

6. TO KILL CS1 the tube at 5-10R must conduct. This requires that 5-11R be cut off.

7. 5-11R cut off from minus input to grid 3 from 5-11N, which is conducting (from step 2 above).

8. NOTE: If RO 6th (CS1) wired on a CRO program, machine will stay in CS1. Panel wiring will cut off 1-5X_2 which will make 5-10N_2 conduct and cut off 5-11N. Plus output from plate of 5-11N to grid of 5-5L will make 5-5L conduct and hold CS6 line down. CS1 line will stay plus because 5-10R cut off. 5-11R conducts to do this because both grids are plus.

PANEL CONTROLS FOR CS6 (RI 6th)

OBJECTIVE: Activate CS6 line. Kill CS1 line.

1. 5-5L cut off to raise CS6 line level. 5-5L cut off because 5-1V_1 conducts.

2. 5-1V_1 conducts because of plus input from 1-5X_1 which is cut off by negative input from wired active program.

3. To kill CS1 the minus level from 5-1V_1 is fed down to 5-11R. This cuts off 5-11R, producing plus output at plate.

4. Plus 5-11R plate makes 5-10R conduct, dropping CS1 line and killing that row of column shift switch tubes.

F AND EARLIER SUFFIX CIRCUIT NOTES

Figure 116 shows the circuit used for the Column Shift Control on machines earlier than the G suffix. The objectives are identical to the previously discussed circuits. The "CS2, 3, 4, 5 mixer" uses pentagrid switch units rather than inverters. As with the preceding circuits, it is the suppression of the CS1 line during any controlled shift that provides the interesting elements of the circuit. The tube at 5-11R is the key in this objective. A negative potential on either grid will suppress CS1. The second circuit of interest is the autoshift to CS6 on a CRO which can be suppressed by control panel wiring. The key tube in this operation is 5-11N. 5-11N can only conduct on a CRO operation (due to its grid 3 input) but this conduction can be eliminated by any plugged CS control (which will cause a minus grid 1 on 5-11N).

THE COUNTER AND ITS CONTROL (G & H)

THE COUNTER is fundamentally a thirteen position storage unit with added carry circuits. Because only the Counter has carry circuits it is the only accumulating device in the 604. By proper internal controls of the Add-Subtract Unit from the True Complement circuit, both additions and subtractions can be done. The only difference between a Counter position "storage assembly" and that of a Storage Unit is a change in the type of unit used for the value 8 trigger. A tapped output is needed from the right side of the value 8 Counter triggers to drive the carry circuit triggers; this is not required by Storage Unit circuits.

To make accumulation possible, the Counter does not automatically reset on a read-in operation as Storage Units do. Instead the reset has been made optional, under control of board wiring, after a read-out has been programmed. On both the 604 and 521 control panels two sets of Counter read-out control hubs have been provided. The groups of hubs labeled simply COUNTER READ OUT cause the counter to read out but to retain its original number group. The groups of hubs labeled COUNTER READ OUT AND RESET, on both the 604 *and*

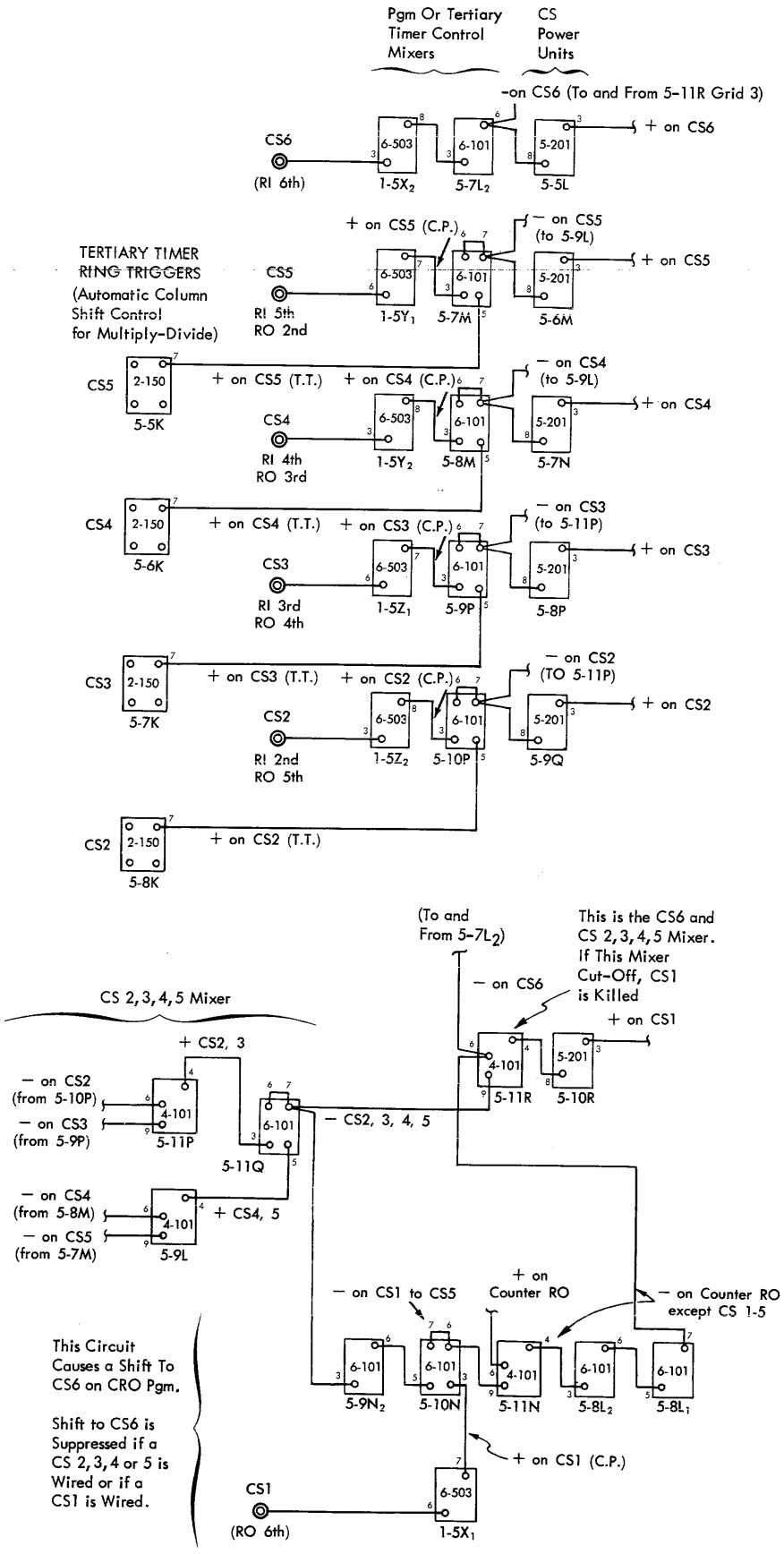

Figure 116. Column Shift Controls (F Suffix and Earlier)

the 521 panels, cause the Counter to read out and then to reset from 3A to 8B *of the next electronic (Primary Timer) cycle.*

Hubs to cause electronic read-in (plus and minus) and electronic read-out of the Counter are provided on the 604 control panel. Information can also be punched out of the Counter. A large calculation result in the Counter can thus be converted directly to punched card form. Read-in from the punch directly to the Counter is not possible. Circuits to permit reading directly into the Counter from the punch (both plus and minus) would be somewhat complex. Furthermore, the provision would not be too generally useful since there are just 8 electronic transfer channels available in the 604. This puts a limit on the size of a number group which can readily be manipulated by the machine. (Coupled Storage Units can be used for accepting number groups up to the 8 digit size.) All read-outs from the Counter, both punch and electronic, end up in true form despite the fact that plus results are held in the 604 Counter in complement form.

Compared to other IBM machines, the entering of plus figures in complement form to the 604 Counter is unusual. In our tabulating machines, for instance, all positive entries are in true form while negative entries are made as complements. The 604 method does however, solve without extra circuits some trouble-some zero balance sign details inherent in other systems. The chart of Figure 117 compares the 10's complement system used in 405's to the 9's complement, carry back system used in 402's and 407's.

In the 10's complement system an "elusive one" is entered into the counter units position on all complement (minus) entries. This gives consistent sign results but makes for more complicated circuits.

The popular 9's complement, carry-back system is more direct in its circuit design but introduces a sign problem on zero balances. It is a high order nine which tells the tabulators that a result is a complement (and therefore minus) figure that must be converted. A zero balance in the 9's complement system results in all 9's in the counter. The high order nine therefore controls the conversion circuits to cause the nines to print out as all zero's (or blanks); but they are indicated as a negative balance because of the conversion step, i.e., all negative entries are complements, therefore any figure that requires conversion must be negative. In the 407, extra circuits are included to overcome this "negative zero" indication. The 604 design approach eliminates this "negative zero" trouble without extra circuits. The reasoning behind the design runs about as follows: a) It is desirable to use the 9's complement system for its simpler circuits. b) In the 9's complement system a zero balance is indicated as all

Problem: + 24 - 12=12. 12-12=0

Manual Operation		10's Complement System		9's Complement System	
+24		+24		+24	
		+1 (elusive 1)			
-12		999987		999987	
		999902		999901	
		11111	-Carry-	111111	(Carry Back)
+12	- First Step Answers -	000012		000012	
		+1 (elusive 1)			
-12		999987		999987	
00		999990		999999	
		11111	-Carry-		
00	- Final Answers -	000000		999999	

Note: This Illustration Shows Arithmetic Principles Only. It Does Not Consider 604 Operation Where Plus Entries Are Complements and Minus Entries Are in True Form.

Figure 117. General Principles of Counter Operation

9's, which is the complement of zero's. c) We want zero balances to be considered as positive, and we wish to be consistent for all numbers. d) If zero's are to be plus, then (to be consistent) all other plus numbers must also be in complement form just as zero's are. e) Since plus numbers are in complement form, minus figures must be in true form to maintain a distinction and to provide proper counter accumulating action.

An additional advantage of the 9's complement design (with its inherent all 9's standing for a zero balance) is the ease with which the circuit can be electronically tested for a zero balance. A single pulse is entered into the low order end of the Counter. Only if the Counter is at zero (and therefore standing with 9's) will the pulse successively carry through all the positions and produce a shift out of the high order assembly.

To determine whether a figure in the Counter is in true (minus) or complement (plus result) form, the machine must sense the highest order position of the Counter for the presence of a 9. A 9 indicates a complement plus result, while no 9 indicates a true, negative result. Thus when the Counter is positive and stands at 999—9264, it reads out as a positive number 000—0735. When the Counter stands at 999—9999, it reads out as a positive number 000—0000. When the counter is negative and stands at 000—0735, it reads out as a negative number 000—0735. To permit customer utilization of the full 13 positions of the Counter, a simplified, non-accumulating 14th position trigger has been added. This 14th position trigger keeps track of the Counter plus or minus status and sets a 9-No 9 memory trigger accordingly. It is the 9-No 9 trigger to which the machine refers whenever the Counter sign is important.

Whenever the 604 Counter is reset, it is reset to all 9's. The left side grid return resistors of all the Counter value 1 and value 8 triggers are run to the minus 100 volt Counter Electronic Reset Line, as are the right side resistors of the value 2 and 4 triggers. A reset operation thus turns on the 1 and 8 triggers while turning off the 2 and 4. The result is a 9 in each of the thirteen Counter positions. The 14th position trigger and the 9-No 9 trigger are also reset by the same line to their 9 indication (ON) status.

An example of 604 Counter numerical operations is given by Figure 118. A counter of only six positions has been assumed in this example.

Entries to the electronic Counter are accomplished, as in Storage Units, by feeding successive pulses to the

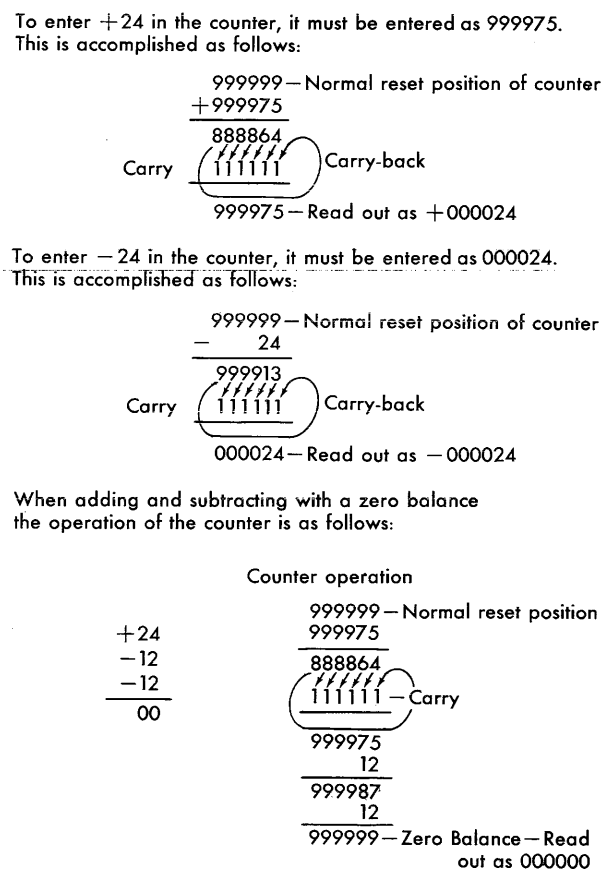

Figure 118. 604 Counter Numerical Operations

Counter, the number of pulses to each position depending on the value of the digit to be entered. Each time a position of the Counter goes from 9 to 0, a carry must result (it is necessary to add 1 to the next higher order position). A counter position may, with different figures involved, go from 9 to 0 at any point in the 11B through 19B entry portion of the electronic cycle. To prevent interference between the carry and the digital pulse entries, all carry entries are delayed until after the digital entry portion of the electronic cycle. The carry gate time is from 20B to 1A. The notes on Figure 88 show the primary cycle timing relationships for the reset, entry, and carry operations.

To provide the uniform carry time, two carry circuit tubes are used for each counter position; these are a trigger to remember, and a switch to control. Whenever a counter position advances from 9 to 0, the carry trigger for that position is turned on. The trigger remains ON (and conditions its carry switch tube) until after the 20B to 1A carry portion of the cycle. While all the carry switches receive the 20B to 1A carry gate, only those switches conditioned by an ON carry memory

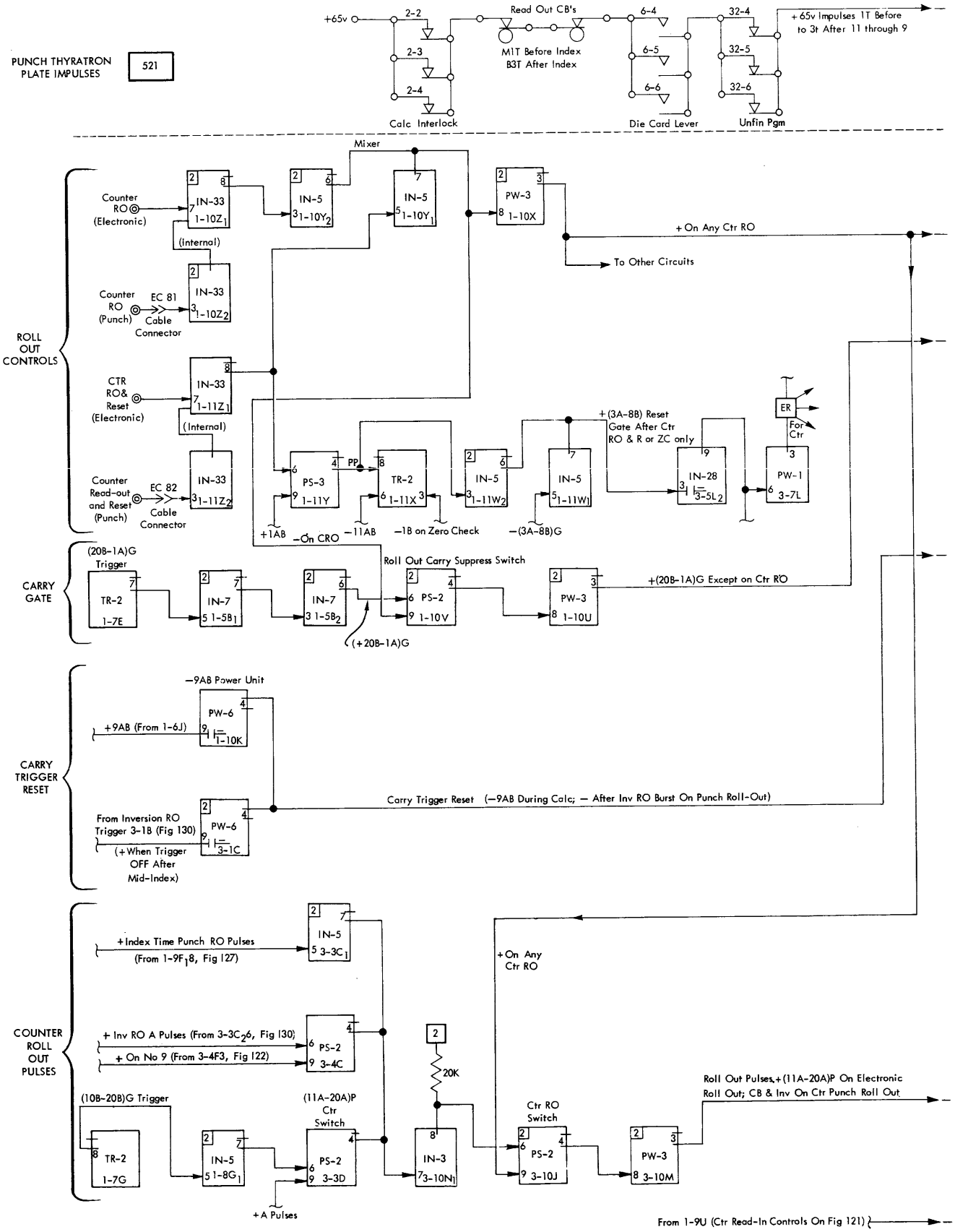

Figure 119. Counter Control Circuits (G Suffix)

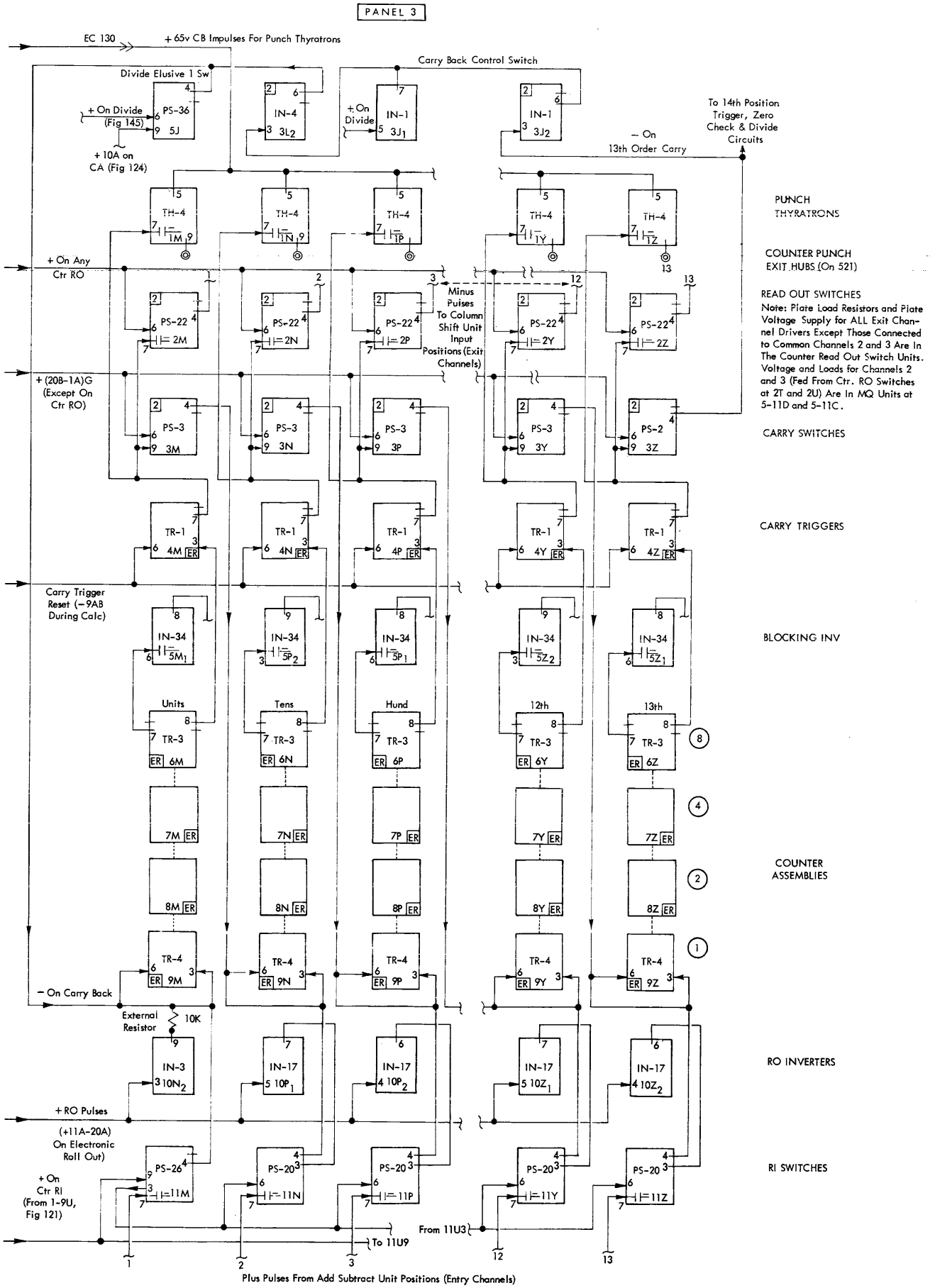

Figure 120. The G Suffix Counter Circuits

trigger will pass the gate shift to the next higher order counter position.

If a counter position is standing at 9 just before carry gate time, any entered carry shift will itself advance the position to 0 and turn on the carry trigger. This will condition the corresponding carry switch and send a carry to the next higher order position. All the carry entries are not exactly simultaneous under these conditions. Since there are 13 counter positions, it is possible to have 12 "successive" carry operations past 9's. For example in the normal reset position the Counter stands at 9999999999999. If a pulse is entered, for instance, to only the units counter position, only this one position will go immediately from 9 to 0; but this will necessitate a carry ultimately to all positions. In this case only the first carry trigger will be ON when the carry gate starts at 20B. The shift will pass the first carry switch and add 1 to the second counter position. This will advance the second position from 9 to 0, turn on the carry trigger, and condition the second position switch to generate a shift. This shift will pass on to the third position where the operation is repeated, and so on through all the positions, terminating with the carry back to the first position. Sufficient time must be provided to complete this "rippling" operation, which requires about 40 microseconds. To provide a safety factor, 70 microseconds are allowed by the 20B to 1A gate at the normal 50 kc operating frequency.

Physical Locations (G & H)

The physical arrangements of Counter units in the 604H is very similar to that used for Storage units. That is, the units position column is on the right (from the wired side of the panel) and the high order on the left. The storage assembly triggers of the Counter read 1, 2, 4, and 8 from top to bottom. The Counter Unit is in panel 5. The circuit given on *System* page 4-0101 is representative of the physical arrangement.

In G suffix and earlier 604's the Counter is in panel 3 and has been rotated 180 degrees as compared to any Storage Unit. This was done to facilitate wiring and reduce cross talk. As a result, the G and earlier suffix machines have the units position of the Counter on the *left* and the trigger values run 1, 2, 4, and 8 from *bottom to top*. Figure 120 gives a representative circuit of the G suffix Counter and is drawn with the physical arrangement found in the machine.

Counter Read-in (G & H)

Whether the Counter receives pulses equivalent to the true digits being sent from the sending unit (as on a minus entry) or pulses equivalent to the complement of the sending unit digits (as with a plus entry) is a function of the add-subtract unit control to be described later. At the moment we are concerned with making the Counter able to accept whatever form of information is available from the entry channels. The Read-In switches provide this control.

H SUFFIX CIRCUITS

On any Counter Read-In operation, the number 1 grids of all the read-in pentagrid switches, 1M through 1Z, (page 4-0101) are conditioned plus cathode level from the read-in control circuits on page 4-0401. Plus entry channel pulses applied to the individual read-in switch number 3 grids can thus pass through and advance the counter position triggers.

The read-in control circuit on page 4-0401 combines the many conditions which must prime the Counter to accept entry channel information. The COUNTER READ-IN PLUS and COUNTER READ-IN MINUS control panel hubs concern us now, but the Counter must also be automatically controlled to accept data on Multiply, Zero Check, Divide, and on Half Adjust programs. The circuit is designed so any of these six conditions will produce a minus input to pin 5 of the inverter unit at $2J_1$. The resulting plus level from the plate of $2J_1$ feeds the CF-11 unit at 3J which provides the necessary plus cathode level used to control the Counter read-in switches.

The circuit feeding the grid of $2J_1$ is effectively a six entry OR circuit mixer. On page 4-0401, $2J_2$ conducts on divide; $2H_2$ conducts on control panel CRI plus, $2H_1$ conducts on control panel CRI minus, and $3H_2$ conducts on half adjust. These are all in panel 5. In addition, $3\text{-}11J_2$ (page 8-0203) conducts on zero check, and a PS unit at 3-11F (page 7-0101) conducts during the counter entry cycles of a multiply program. All of these units get their plate voltage from and have their plate load resistor in $5\text{-}2H_1$ (page 4-0401).

G SUFFIX CIRCUITS

On any Counter Read-In operation the number 3 grids of the pentagrid read-in switches, 11M through

11Z (Figure 120) are conditioned plus. The units at 11M and 11T are grid 3 masters controlling grid 3 slaves to their right. Plus entry channel pulses applied to the individual number 1 grids of the read-in switches can pass through and advance the counter position triggers as long as the "plus on Ctr RI" voltage is available.

The "plus on Ctr RI" voltage comes from the circuit shown by Figure 121. Besides being primed to accept entry channel data when the control panel COUNTER READ-IN PLUS and the COUNTER READ-IN MINUS hubs are energized, the Counter must also be automatically controlled to accept data on Multiply, Divide, Zero Check, and Half Adjust programs. The read-in control circuit combines these conditions.

The power unit at 1-9U will supply a "plus on Ctr RI" voltage whenever its grid is pulled minus (beyond cutoff) by conduction through any of the five tubes feeding its grid circuit. These grid circuit tubes constitute a five input mixer (OR circuit). For example, a minus active program signal into the COUNTER READ-IN PLUS hub will cause $1\text{-}9Z_2$ to cut off. The plus output causes $1\text{-}9X_2$ to conduct cutting off 1-9U and producing the "plus on Ctr RI" output. $1\text{-}9X_2$ conducts on CRI plus; $1\text{-}9X_1$ conducts on both CRI minus and Zero Check (the mixing for these two conditions takes place in $1\text{-}6Q_{1 \text{ and } 2}$); $1\text{-}9T_2$ conducts on Half Adjust; $1\text{-}9V_1$ conducts during divide; and 3-10B conducts (except during certain cycles) while multiplying. The plate voltage and plate load for each of the 5 mixer tubes is in the unit at $1\text{-}9T_2$.

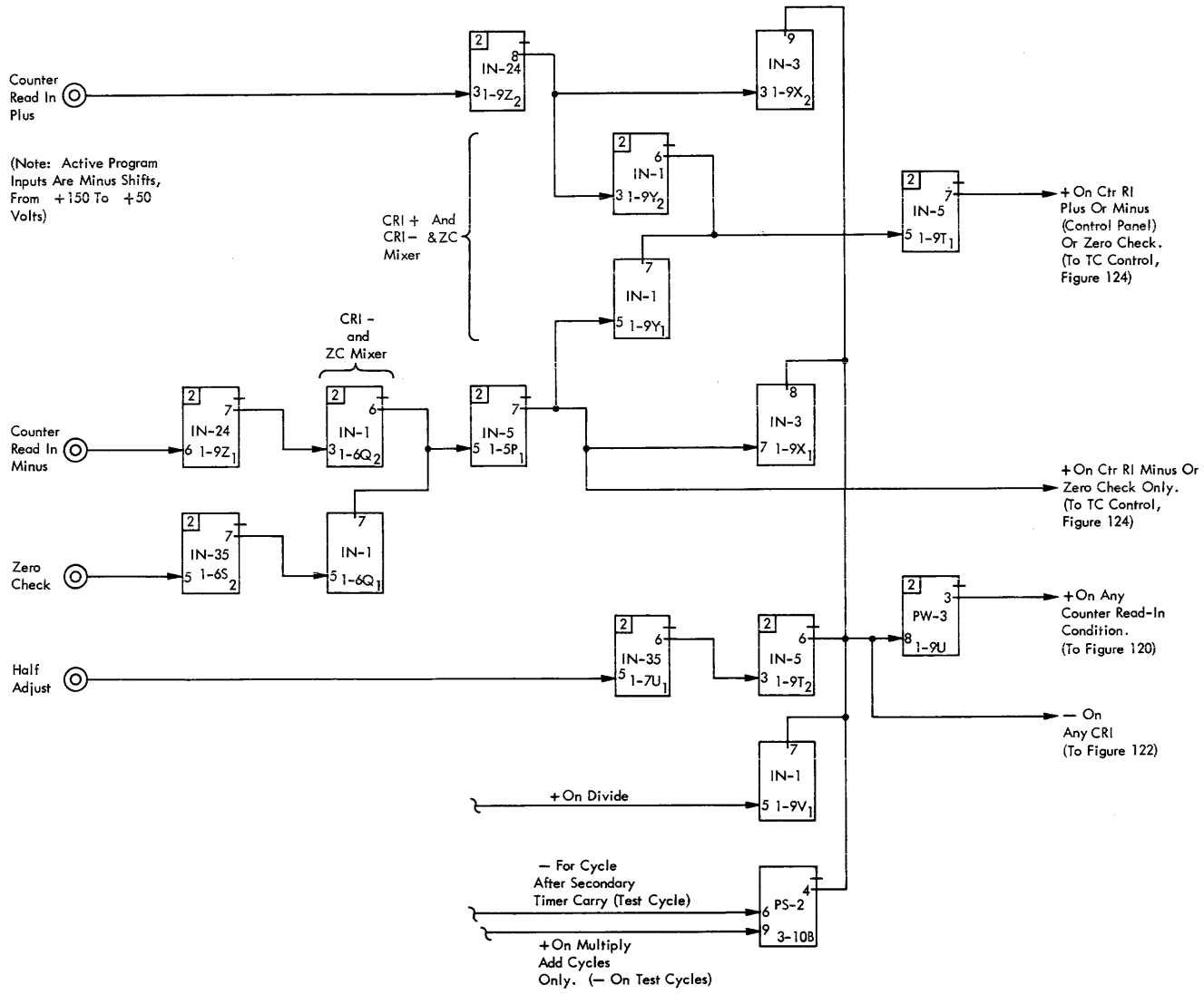

Figure 121. The Counter Read-In Control Circuits (G Suffix)

Carry (G & H)

The general elements of the carry operation have been discussed earlier. We will now discuss the circuits.

H SUFFIX CIRCUITS

Normal Carry. When a counter position goes from 9 to 0, the corresponding carry trigger, 8M through 8Z, page 4-0101, will turn on. A plus potential will be applied to grid 1 of the corresponding carry switch, 7M through 7Z. From 20B to 1A of each cycle (except Counter roll out) grid 3 of each carry switch is positive. A negative shift will result from the plate of any carry switch fed from an ON carry trigger. The carry switches have their plate loads and source of plus 150 volts in the read-in switch for the next higher order position (the position immediately to the left). Therefore, if a carry switch conducts during carry gate time, a negative shift from the tapped output of the read-in switch feeds to the trigger assembly and advances the position by 1.

Carry Back. The "carry back" from the high order carry switch, 7M, is used by the 14th position trigger circuits, the zero check circuits, and the divide circuits. During divide the carry back to the units position is suppressed by circuits on page 7-0201. To reach the units position of the Counter the carry back pulse "—on 13th order carry" must pass through the inverter switch at 5-1$K_{1 \text{ and } 2}$ (page 7-0201). If 5-1K_2 is conducting, as it does only on divide, the combined plates of the inverter switch will stay low and not reflect the minus carry input pulse at 5-1K_1. At all other times, however, the minus carry back pulse is inverted through 5-1K_1 and is reinverted to a negative pulse again by 5-2K_2. The output from 5-2K_2 feeds directly to the input of the first order counter trigger assembly, 3Z on page 4-0101. This advances the position by 1 on a carry back.

Carry Gate. The carry gate feeding the carry switches must be suppressed whenever the Counter is controlled to read-out. If this is not done, each position of the Counter will be advanced by one carry after each roll out. (The ten 11A through 20A roll out pulses roll each position full around and turn on all carry triggers.) The circuits for this control of the carry gate are on page 4-0301. The key unit is the switch at 5H. Each cycle grid 3 of 5H receives the carry gate which is controlled by the 20B to 1A gate trigger (page 1-0201). Grid 1 of 5H is normally plus. On a Counter-roll-out operation 3H_1 is made to conduct. This produces a negative output that cuts off 5H. Suppressing the carry gate in this way kills Counter carry regardless of the status of any carry triggers.

Carry Trigger Reset. The carry triggers must all be OFF before the start of any Counter entry cycle. To insure this status, a minus 9AB pulse is directed *each cycle* to the left grid of each carry trigger. The 9AB pulse terminates after the 3A to 8B reset gate is applied (as programmed) to the counter triggers. Any ripple produced by resetting the Counter will thus not affect the final OFF setting of the carry triggers.

G SUFFIX CIRCUITS

Normal Carry. When a counter position goes from 9 to 0, the corresponding carry trigger, 4M through 4Z, Figure 120, will turn on. A plus potential will be applied to grid 1 of the corresponding carry switch, 7M through 7Z. From 20B to 1A of each cycle(except a Counter read out) grid 3 of each carry switch is positive. A tapped level negative shift will result from the plate circuit of any carry switch fed from an ON carry trigger. The negative carry shift feeds to the input of the counter trigger assembly for the next higher order (the position immediately to the right), advancing it by the 1 carry.

Carry Back. The carry back from the high order carry switch, 3Z, to the units position trigger assembly passes through a control switch, 3J, and an inverter, 3L_2. Carry back is suppressed during division. A plus on divide input to 3J_1 makes this tube conduct. This swamps in the plate circuit the effects of the cut off of 3J_2 which occurs whenever a carry occurs from the 13th order of the Counter. With 3J_1 cut off, as it is except on divide, a negative carry back shift into 3J_2 appears on the plate as positive. This is reinverted to minus by 3L_2 and applied to the units position to advance it by 1.

The minus shift on 13th order carry is also directly used by the 14th position trigger, the zero check, and the division circuits.

Carry Gate. The carry gate feeding the carry switches must be suppressed whenever the Counter is controlled to read out. If this is not done, each position of the Counter will be advanced by one carry after each roll out. All the carry triggers will be turned on as the ten 11A through 20A roll-out pulses spin each position full around. By suppressing the 20B to 1A carry gate, all counter carry is killed regardless of the status of the carry triggers. The circuit both to generate and control the carry gate is given by Figure 119. The carry gate

comes from the 20B-1A gate trigger. The plus gate appears on grid 3 of the pentagrid switch control unit at 1-10V. The gate normally gets through this switch; but if a Counter Read Out is programmed a minus potential is applied to grid 1 from 1-10Y_1. The carry gate thus gets no further on a CRO.

Carry Trigger Reset. The carry triggers must all be OFF before the start of any Counter entry cycle. To insure this status, a minus 9AB pulse is directed *each cycle* to the left grid of each carry trigger. The 9AB pulse terminates after the 3A to 8B reset gate is applied, as programmed, to the Counter triggers. Any ripple produced by resetting the Counter will thus not affect the final OFF setting of the carry triggers.

Counter Read-Out (G & H)

In the counter circuits a separate read-out switch is used at each position to isolate the exit channels from the Counter except during a Counter read-out. These are the units at 9M through 9Z on page 4-0101 and 2M through 2Z on Figure 120. Since the Counter is used for accumulation, any position might roll from 9 to 0 at any point within the 11B through 19B portion of a read-in cycle. Without the isolating read-out switches, these 9 to 0 shifts could appear on the Counter exit channels, flow through the column shift, flip the add-subtract triggers, and produce wrong results Referring to the data flow wiring given by Figure 113 or 114 will show how the interaction could arise. Such isolating switches are not required in Storage Units because Storage Units are always reset to zero before any read-in to them. A 9 to 0 shift therefore cannot occur since 9 read-in pulses (11B through 19B) are the maximum that can reach any position.

On a Counter read-out operation the exit channel read-out switches are activated from the control circuits. Also, just as was true with Storage Units, 11A through 20A roll-out pulses are applied to each position. These pulses are applied through roll-out inverters on the H and G suffix machines and through roll-out switches on F suffix and earlier designs. (The Counter illustrated by Figure 114 is arranged according to the F and earlier design.) The suppression of carry on a Counter read-out was covered earlier under "Carry."

H SUFFIX CIRCUITS

The 11A through 20A roll-out pulses are applied to each position through a roll-out inverter, 2T_2 through 2Z_2, page 4-0101. Each roll-out inverter section obtains its plate load and plate voltage from the read-in switch of the corresponding position, 1M through 1Z. Minus, tapped level pulses are fed to the counter trigger assemblies whenever plus 11A through 20A pulses are fed to the common input line for the roll-out inverters. These pulses advance each assembly around and back to its starting value. On a *punch read-out operation,* CB controlled pulses (and inversion read out pulse bursts if the Counter is minus) will enter through the same path.

The roll out pulses come from the circuit shown on page 1-0501. This output is from the CF-5 unit at 1C_1. (1C_2 on the same line mixes in the inversion read out pulses only as needed on a punch out operation.) The PS-12 unit at 1G controls the 11A-20A pulses so they only feed to the Counter on a read-out operation. The pulses are fed each cycle to grid 1 of 1G from a CF-5 unit at 3-5P_1 on page 1-0201. Only if grid 3 of the unit at 1G (page 1-0501) is positive will the roll-out pulses be passed on to the Counter. This plus conditioning of Ctr RO or Ctr RO and R comes through page 4-0301 from page 4-0402. The Counter read-out control circuits on page 4-0402 mix the four Counter read-out controls (with or without reset, 604 panel or 521 panel). Making either 4H_1 or 4H_2 conduct produces the desired plus on Counter read-out level. The unit at 4J is the 604-521 "read-out without reset mixer." The unit at 5J is the 604-521 "read-out with reset mixer." The line running from the cathodes of the 4H tubes to page 8-0103 merely feeds one unit there and returns to page 4-0402 as the input of 10R_2. After inversion and passing through the CF-11 unit at 10S we have a minus on Ctr RO or RO and R which is used by the exit channel isolation read out switches to be discussed next.

The exit channel isolation read-out switches are of the inverter type located from 9M through 9Z on page 4-0101. The IN-2 units have internally commoned plates. The left tube of these inverter switches is only cut off on Counter Read Out (or Counter Read Out and Reset) by the output of the CF-11 unit at 5-10S (preceding paragraph). The right grid input receives a negative shift whenever the corresponding carry trigger comes ON as the position rolls from 9 to 0 at some approximate A time. The input capacitors convert these shifts into "reconstructed A pulses." These appear as plus pulses on the tied plates of each inverter unit and feed to the exit channels through the cathode follower drivers, 10T_2 through 10Z_2. The Column Shift Add-Subtract Unit takes over from there.

G SUFFIX CIRCUITS

The 11A through 20A roll-out pulses are applied to each position through a roll-out inverter, $10N_2$ through $10Z_2$, Figure 120. Each section of the roll-out inverter unit obtains its plate load and plate voltage from the read-in switch of the corresponding position, 11M through 11Z. Minus, tapped level pulses are fed to the counter trigger assemblies whenever plus 11A through 20A pulses are fed to the common input line for the inverters. These pulses advance each assembly around and back to its starting value. On a *punch read-out operation,* CB controlled pulses (and inversion read-out pulse bursts if the Counter is minus) will enter through the same path.

The roll-out pulses come from the circuit drawn on Figure 119. Only the portion of this illustration labelled "Counter Roll Out Pulses" concerns us at the moment. The plus 11A-20A pulses come from the power unit at 3-10M. The input to this power unit is controlled by the pentagrid switch unit at 3-10J, which has its number 1 grid primed positive only during any Counter Roll Out operation. This fact controls the passage of the plus 11A-20A pulses applied each cycle to grid 3 from $3\text{-}10N_1$. The three tubes driving the grid of $3\text{-}10N_1$ provide the particular pulses needed at one time or another to read out of the Counter. The 11A-20A group of pulses needed for the electronic read-out presently being discussed is provided each Primary Timer cycle by the switch unit at 3-3D. The 10-B-20B Gate trigger controls grid 3 so only the 11 through 20 group of the steady A pulses applied to grid 1 is able to pass through the switch. $3\text{-}3C_1$ provides the necessary index time pulses when reading out of the Counter to the 521 punch. (The switch at 3-4C supplies inversion read out pulse bursts which are needed when the Counter has a true [minus] figure stored and a punch read-out is instructed. The "plus on No 9" input to 3-4C is high only when a true figure is in the Counter.)

The exit channel isolation read-out switches are of the pentagrid type, located from 2M through 2Z, Figure 120. Information from the Counter will appear on the exit channels (for passage through the Column Shift Add Subtract Unit and on to the receiving unit) only when the number three grids are fed an up-level from the "plus on any Ctr RO" line. It is important to note that the plate loads and the plate voltage supply for each of the exit channels, and all the Storage Unit inverter drivers connected to these exit channels, are located in the Counter read-out switches. Removing one of the units 3-2M through 3-2Z will kill an entire exit channel. Exit channels 2 and 3, fed by Counter read-out units 3-2T and 3-2U, are exceptions. Plate loads and voltage for these channel units are in the units at 5-11C and 5-11D (the MQ Storage Unit).

The "plus on any Ctr RO" line comes from the roll-out control circuit portion of Figure 119. Cutting off the power unit at 1-10X produces the plus output needed on any Counter read-out operation. The input circuit to this unit mixes the four possible read-out controls (with or without reset, 604 or 521 panel). Three inverter OR circuit mixers are used. The unit at $1\text{-}10Z_{1 \text{ and } 2}$ mixes the 521 and 604 control panel read-out *without* reset instructions. The unit at $1\text{-}11Z_{1 \text{ and } 2}$ mixes the 521 and 604 read-out *with* reset instructions. The unit at $1\text{-}10Y_{1 \text{ and } 2}$ mixes the with and without reset combinations.

F SUFFIX AND EARLIER NOTES

In machines prior to the G suffix a separate roll out control pentagrid switch was used for each roll out inverter section shown by Figure 120. These switches received plus 11A-20A pulses each cycle on their number 1 grids. The "plus on any Ctr RO" voltage controlled the number 3 grids. The pre-G Counter circuit has been left in Figure 114 to illustrate this earlier arrangement.

Counter Resetting (G & H)

The Counter is reset to all 9's. The same reset unit also simultaneously sets the 14th position trigger and the 9-No 9 trigger to their "9" statuses.

Automatic Counter Reset by DC On (G & H). The Counter is reset whenever DC is reapplied after having been off (such as when replacing the 604 control panel). The 10 milliseconds or so taken to pick relay 5 from the minus 100 volt supply causes this reset by delaying minus 175 volts to the Counter Electronic Reset circuit. This was discussed in detail eariler in this chapter under "Special Primary Timer, Program Ring, and Counter Reset."

Controlled Counter Reset (G & H.) The Counter can be controlled to read out and then reset, or to read out without reset both electronic and punch. When the Counter is wired to read out and reset, the reading out must precede the reset to prevent loss of data. Since the only time really available for resetting data circuits is from 3A to 8B, the net effect is that any Counter reset must occur on the next electronic cycle after the

CRO and R instruction. A counter reset trigger provides the memory for this action.

H SUFFIX CIRCUITS (PAGE 4-0201)

$7K_1$ and $7K_2$ form an inverter switch. $7K_2$ is cut off from each cycle from 3A to 8B. If $7K_1$ is also cut off, the Electronic Reset circuit will be gated and the Counter reset line will shift from minus 100 to plus 10 volts from 3A to 8B. $7K_1$ and the counter reset trigger, 6J, are the key items in the circuit. If the trigger is ON, $7K_1$ is cut off and resetting will occur. The trigger gets an 11AB turn-off pulse each cycle on pin 6. The trigger can be turned on by plate pullover from either of two units:

1. *604 Control Panel Reset Wiring.* Either a Counter Read Out and Reset or a *Zero Check* Instruction demands next cycle counter reset. Pin 3 of the PS unit at 6K is plus during either instruction. At 23AB, near the end of the program step, grid 1 will also go positive, producing a negative plate output to pull the reset trigger ON. The trigger stays on until 11A of the next cycle, long enough to allow passage of the 3A to 8B gate through the inverter switch.

2. *521 Control Panel Reset Wiring.* When the COUNTER READ OUT AND RESET hub on the punch control panel is impulsed, grid 3 of the PS unit at 7H will go positive. Since the Primary Timer is "latched up" in step 1, during punching grid one of the unit at 7H is also plus. The counter reset trigger is thus pulled on immediately and stays on until 11A of the first electronic cycle of the following calculations. The result is the reset of the Counter from 3A to 8B of the first Primary Timer revolution following punching and reading.

G SUFFIX CIRCUITS (FIGURE 119)

Only the portion of Figure 119 labeled "Roll Out Circuits" is involved in this discussion. Our objective is to send a plus 3A to 8B gate to the Counter Electronic Reset circuit only when a Counter Reset has been instructed. The two halves of 1-11W form an inverter switch. $1\text{-}11W_1$ is cut off each cycle from 3A to 8B. If $1\text{-}11W_2$ is also cut off, the tied plates can rise and cause the 3A to 8B reset. The control of $1\text{-}11W_2$ becomes the key to circuit operation. This tube will be cut off and therefore permit counter reset whenever the counter reset trigger, 1-11X, is ON. Whenever this trigger is turned on it will stay on until the 11AB pulse reaches its left grid.

There are three conditions which will turn on the counter reset trigger:

1. *If the 604 Counter Read Out and Reset hub is impulsed,* the unit at $1\text{-}11Z_1$ will be cut off by the negative program input shift. The resulting plus output from the plate of $1\text{-}11Z_1$ conditions plus grid 3 of the pentagrid switch at 1-11Y. At 1AB, the very end of the program step, 1-11Y will receive a plus pulse on its number 1 grid, conduct, and turn the reset trigger on by plate pullover. Since the trigger stays ON until 11A, the 3A to 8B reset gate can reach the ER circuit and cause counter reset in the following cycle.

2. *If the 521 Punch Ctr RO and R hub is impulsed,* the plus 48 volt CB impulse into $1\text{-}11Z_2$ causes this tube to conduct. This will result in the cut off of $1\text{-}11Z_1$ and a positive grid 3 at the switch unit 1-11Y. Since the Primary Timer is "latched up" in step 1 during punching, grid 1 of 1-11Y is already plus. The counter reset trigger therefore comes on immediately and stays ON until 11A of the first Primary Timer cycle following punching-reading. Counter resetting can thus occur on the first electronic cycle following the punch control cycle.

3. *On a Zero Check step from the 604 control panel* the counter reset trigger is turned ON at 1B by a right grid input. This zero check reset control pulse comes from a unit at 1-9W. The zero check circuits will be discussed in later pages.

Counter Balance Sensing (G & H)

The counter balance circuits indicate whether the number group in the Counter is positive (complement form) or negative (true form). It is common practice with IBM mechanical counters handling plus and minus figures to restrict the use of the highest order position to a simple indication of the need for conversion. No digital entries are allowed to the highest order position. All it receives is a "hot 9" and/or a carry impulse to keep track of the counter status. Using only this input information the position will, after any cycle, hold either a 9 to indicate a complement counter result or a 0 to indicate a true result.

The 604 counter balance sensing circuits work in the same general way. To permit the full 13 digit capacity of the Counter to be used, a limited capacity 14th order position has been added. Since this position need only indicate either one of two possibilities (a 9 condition or a 0 condition), only a single 14th position trigger need be used rather than a full, four trigger digital

storage assembly. Since no digital entries are ever made to the 14th position trigger, only 13 add-subtract unit positions and a maximum of 13 column shift data lines need be supplied. Thus the simplified 14th position design used in the 604 saves quite a few tube units and associated wiring.

At 1AB, the end of each machine cycle, the 14th position trigger sends its 9 or 0 status to the 9-No 9 memory trigger. The 9-No 9 is set and holds the 9 or 0 status until near the end (23AB) of the following cycle. It is the 9-No 9 trigger to which the machine circuits refer as necessary to discover the type of figure that was in the Counter at the end of the previous cycle.

The G suffix circuit for balance sensing is given by Figure 122. The circuit for the H suffix machine (*System* page 8-0101) differs in only two ways: 1) the location and exact type of the units, and 2) the use of cathode followers instead of power units to feed the "plus on 9" and "plus on No 9" lines. Figure 122 will be used for the circuit description.

Note that the 14th position trigger is binary connected; the 9-No 9 trigger is not. Both triggers are reset to their "9" status (ON) whenever the Counter is reset. There are two objectives to the complete circuit. One is to set the 9-No 9 trigger to the same status at the 14th position trigger at the end of each electronic cycle. The second objective is to make the 14th position trigger correctly continue to reflect the type of figure in the Counter.

The setting of the 9-No 9 trigger each cycle is controlled by the 14th position test switch. Only if the 14th position trigger is ON, indicating a 9, will the switch tube be primed to pass the plus 1AB pulse applied each cycle to its number 3 grid. The 9-No 9 trigger is turned off (to its 0 status) at 23AB *of each cycle.* It will stay OFF unless turned on by a "1AB pulse on 9 only" from the 14th position trigger controlled test switch. This "turn off - test - and set" action occurs each cycle whether the Counter is in use or not.

The 14th position trigger is only acted upon if the Counter is in active use. One of the two possible inputs to the binary connected grids of the trigger is a carry back from 13th order of the Counter. This can occur only if the Counter is being read into (carry is suppressed on a read-out) and then only if certain types of plus and minus figures are involved. The second possible 14th position trigger input is an 11AB pulse. This input is only applied when a complement entry is made to the Counter. Two switches are needed to control this 11AB pulse properly. The IN-1 type switch will pass the minus 11AB pulse (applied each cycle to its section 2 grid) only when a Counter read-in action is called for. This read-in can be due to instructions calling for RI plus, RI minus, Multiply, Divide, Zero Check, or Half Adjust. The plus 11AB output from

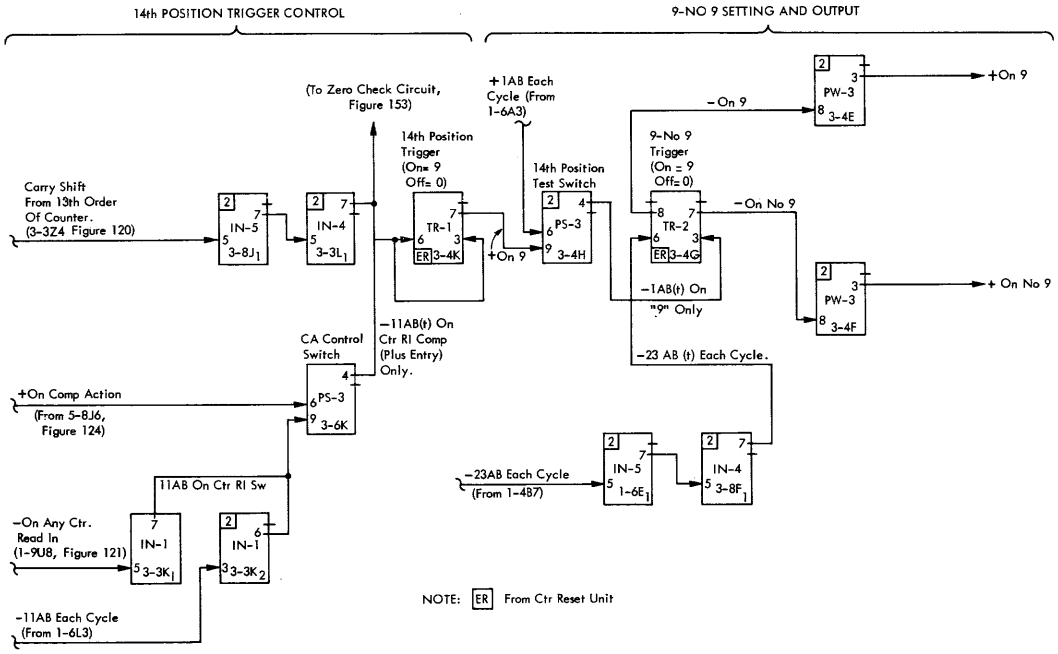

Figure 122. The Counter Balance Sensing Circuit (G Suffix)

the inverter switch (on any Ctr RI) passes to grid 1 of the pentagrid switch unit. Grid 3 of this unit is plus whenever a complementing action is occurring as digits pass through the Add-Subtract Unit. The output of the PS unit is the desired minus 11AB tapped level pulse only when a complement entry (addition) is being made to the Counter. As will be seen in a moment, it is possible for one or both or neither of these inputs to occur on a Counter read-in. Due to the binary connection of the 14th position trigger, every second pulse returns it to its starting position.

It remains now to show that if the 14th position trigger is properly reset to "9" (which it is whenever the Counter is similarly reset), the 11AB pulse on complement add and the carry back shift (when one occurs) will serve to keep the 14th trigger indicating properly through all types of Counter entries. There are only six possible Counter actions that can result

OPERATION	604 Ctr Example	14th POSITION TRIGGER ACTION				
		Position At Start	Comp Add (11AB Pulse)? Status After:	Carry Back (20B–1A Shift)? Status After:	Is Final Status Changed From Start?	Status At End
Ctr Plus or Zero. Plus Figure Added. Ctr Becomes More Plus. No Sign Change (Still Plus) (0 +5 = +5)	999 994 883 111 994	On (9)	Yes Off (0)	Yes On (9)	No	On (9)
Ctr Plus. Smaller Figure Subtracted. Ctr Becomes Less Plus But No Sign Change (Still Plus) (+5 −3 = +2)	994 003 997	On (9)	No On (9)	No On (9)	No	On (9)
Ctr Plus. Larger Figure Subtracted. Ctr Becomes Negative. Sign Changes (+2 − 6 = −4	997 006 993 111 004	On (9)	No On (9)	Yes Off (0)	Yes	Off (0)
Ctr Negative. Another Figure Subtracted. Ctr Becomes More Negative No Sign Change. (−4 −3 = −7)	004 003 007	Off (0)	No Off (0)	No (Off) (0)	No	Off (0)
Ctr Negative. Smaller Figure Added. Counter Less Negative But No Sign Change. (−7 +5 = −2)	007 994 991 111 002	Off (0)	Yes On (9)	Yes (Off) (0)	No	Off (0)
Ctr Negative. Larger Figure Added. Ctr becomes Plus (or zero). Sign Change −2 +4 = +2	002 995 997	Off (0)	Yes (On) (9)	No On (9)	Yes	On (9)

Summary: Only a Complement Add Alone Or A Carry Alone Will Change Final Status of 14th Position Trigger.

Figure 123. Counter and 14th Position Trigger Action

from any combination of entries. The Counter can start plus and then go: 1) more plus, 2) less plus, or 3) negative. The Counter can also start minus (from a previous entry) and then go: 4) more minus, 5) less minus, or 6) plus. The chart of Figure 123 assumes a simple three position 604 type counter doing each of these six actions. The step by step action of the 14th position trigger is listed. A careful examination of the results will show that at the end of any cycle the 14th position trigger indicates correctly. There are only two conditions that call for a different 14th position trigger status at the end than existed at the start of the cycle. These are: 1) when the Counter is plus and has a large negative entry made to it (carry back pulse only), or 2) when the Counter is minus and has a larger plus entry made to it (complement add 11AB pulse only). The circuit action summary is that a complement add without a carry back or a carry back on a true add will change the status of the trigger just as it must for proper operation.

Counter Sign Channel Control on Read-Out

One use of the 9-No 9 trigger is to control the Sign Exit channel whenever a Counter Read Out is programmed. The H suffix circuit is on the lower right of *System* page 8-0103. The G suffix circuit is shown in the lower left of Figure 111.

H SUFFIX CIRCUIT (PAGE 8-0103)

OBJECTIVE: Shift sign exit channel level to plus when a negative (true, No 9) figure group is read from Counter.

1. Pin 9 of PS-12 at 10N plus on any Ctr RO or CRO and R.
2. Pin 7 of PS-12 plus whenever 9-No 9 trigger (5-2S, page 8-0101) is OFF, making plus on No 9 line high.
3. (Page 8-0101) 5-10N conducts; plate level drops.
4. IN-5 at $10P_1$ cut off. Plate level rises. CF-5 at $10T_1$ shifts sign exit channel to plus (c) level.
5. Grid of Ctr Sign Punch Thyratron, 10L, primed to fire tube and energize punch magnet if this is a punch controlled Counter read-out.

G SUFFIX CIRCUIT (FIGURE 111)

OBJECTIVE: Shift sign exit channel to low (plus 50 volt) level when a negative (true, No 9) figure is read from Counter.

1. Tube at $3\text{-}9L_1$ cut off on any Counter Read Out.
2. Tube at $3\text{-}10L_1$ cut off whenever "plus on 9" level drops (minus on No 9). This occurs whenever 9-No 9 trigger is OFF, making power unit at 3-4E conduct (Figure 122).
3. (Figure 111.) Input to $3\text{-}11J_2$ shifts plus, making tube conduct, and dropping sign exit channel level to plus 50 volts or less.
4. Plus output of combined plates of $3\text{-}9L_2$ and $3\text{-}10L_2$ on a Ctr RO of a minus (No 9) figure primes Sign Punch Thyratron to fire and energize punch magnet if this is a punch controlled Counter read-out.

THE TRUE-COMPLEMENT CIRCUIT (G & H)

AS A NUMBER GROUP passes through the Add Subtract Unit, it can be converted to complement form if required by the machine for proper end results. This is accomplished simply by applying a 10A pulse to the add-subtract triggers to turn them all ON prior to the start of the data flow through the unit. This was fully discussed under the "Add Subtract Unit" and "Complement Transfer" earlier in this chapter. These section should be reviewed at this time if the functions of the Add Subtract Unit are not clearly understood. The circuit we are going to discuss now has as its sole objective the control of the "10A for Complementing Action" pulse.

The 604 was designed to do algebraic problems as well as business calculations. Both plus and minus figures can be entered into the machine from the punch. The sign of the operation for Counter entries can be either plus or minus, and the sign of a multiplication operation can be controlled to be either plus or minus. A division operation is always plus but the factors involved in the division may result in a negative answer. The following facts must be properly handled by the True Complement Unit:

1. Figures going to Storage Units must always arrive there in true form regardless of how they started out.
2. Plus entries go into the Counter in complement form, minus entries in true form.
3. Subtracting (Ctr Read In Minus) a minus stored figure into the Counter calls for the figure to be entered into the Counter in complement form. (Algebraic law: to subtract a negative figure, change the sign of the figure and add.)
4. When multiplying, the product will be positive or negative depending upon a combination of the signs of the multiplier, multiplicand, and the operation. Algebraic rules call for the following results:

$$\begin{aligned}
&\text{MULT.} + (+A) \times (+B) = +P\\
&\text{MULT.} + (+A) \times (-B) = -P\\
&\text{MULT.} + (-A) \times (+B) = -P\\
&\text{MULT.} + (-A) \times (-B) = +P\\
&\text{MULT.} - (+A) \times (+B) = -P\\
&\text{MULT.} - (+A) \times (-B) = +P\\
&\text{MULT.} - (-A) \times (+B) = +P\\
&\text{MULT.} - (-A) \times (-B) = -P
\end{aligned}$$

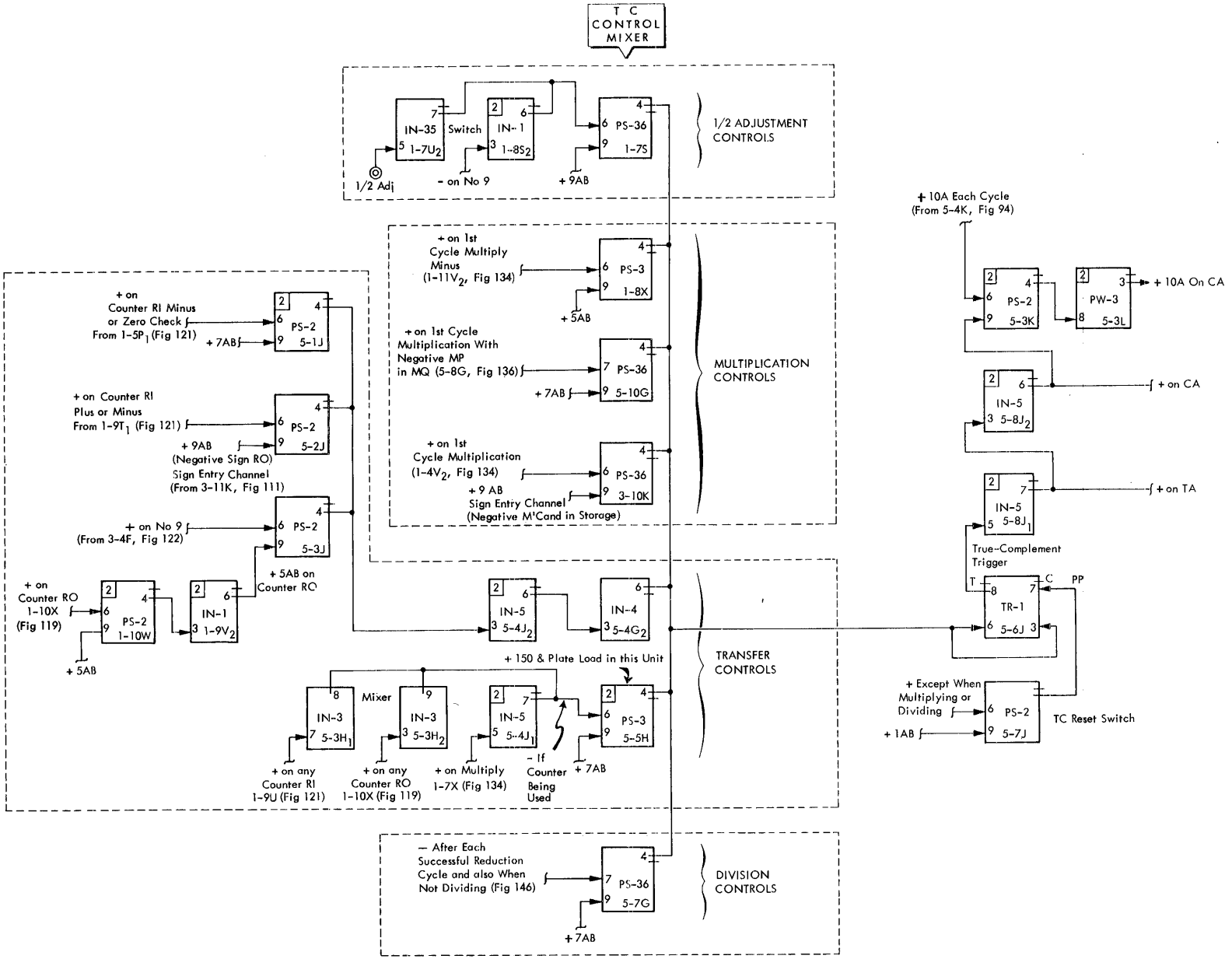

Figure 124. Block Diagram of True-Complement Trigger and Control Circuits (G Suffix)

5. When dividing, if both the divisor and the dividend are plus, the result (quotient) is plus. If one or the other is negative, the result is negative. If both the divisor and dividend are negative, the result is positive.

The key to the proper final results is the control and setting of the true-complement trigger. In the 604H this trigger is located at 3-9J and its circuits will be found on page 8-0102. In the 604G and earlier machines this trigger is located at 5-6J and its circuit will be found on Figure 124. As can be seen, the trigger is controlled from many sources. Notice that the trigger is binary connected. The final status of the TC trigger on any cycle will depend on how many input pulses it receives. Since the TC trigger has as its function the control of the 10A Add-Subtract trigger control pulse, the final status of the TC trigger for any given cycle must be determined prior to 10A. 5AB, 7AB, and 9AB input pulses are therefore used to determine the setting.

The layout of the TC controls for the 604H on the *System Diagrams* is somewhat more difficult to see than it is on Figure 124 for the G suffix. For this reason Figure 125 has been included showing the logical controls of the 604H TC trigger. This illustration is only valid for the H suffix. It should not be interpreted as an actual wiring diagram.

Because the status of the TC trigger may have to be set differently from cycle to cycle, it is necessary to turn it off at the start of each program This gives a known starting status. Because of the binary connection of the TC trigger grids, a plate pullover starting status input is used. With the 604H a 3AB pulse plate pulls the trigger OFF each cycle except during division. With the G and earlier machines a 1AB pulse pulls the trigger off each cycle except during multiplication and division.

When the TC trigger is OFF, a positive output from its left plate is taken, inverted twice, and applied to one grid of a PS unit which receives a plus 10A each

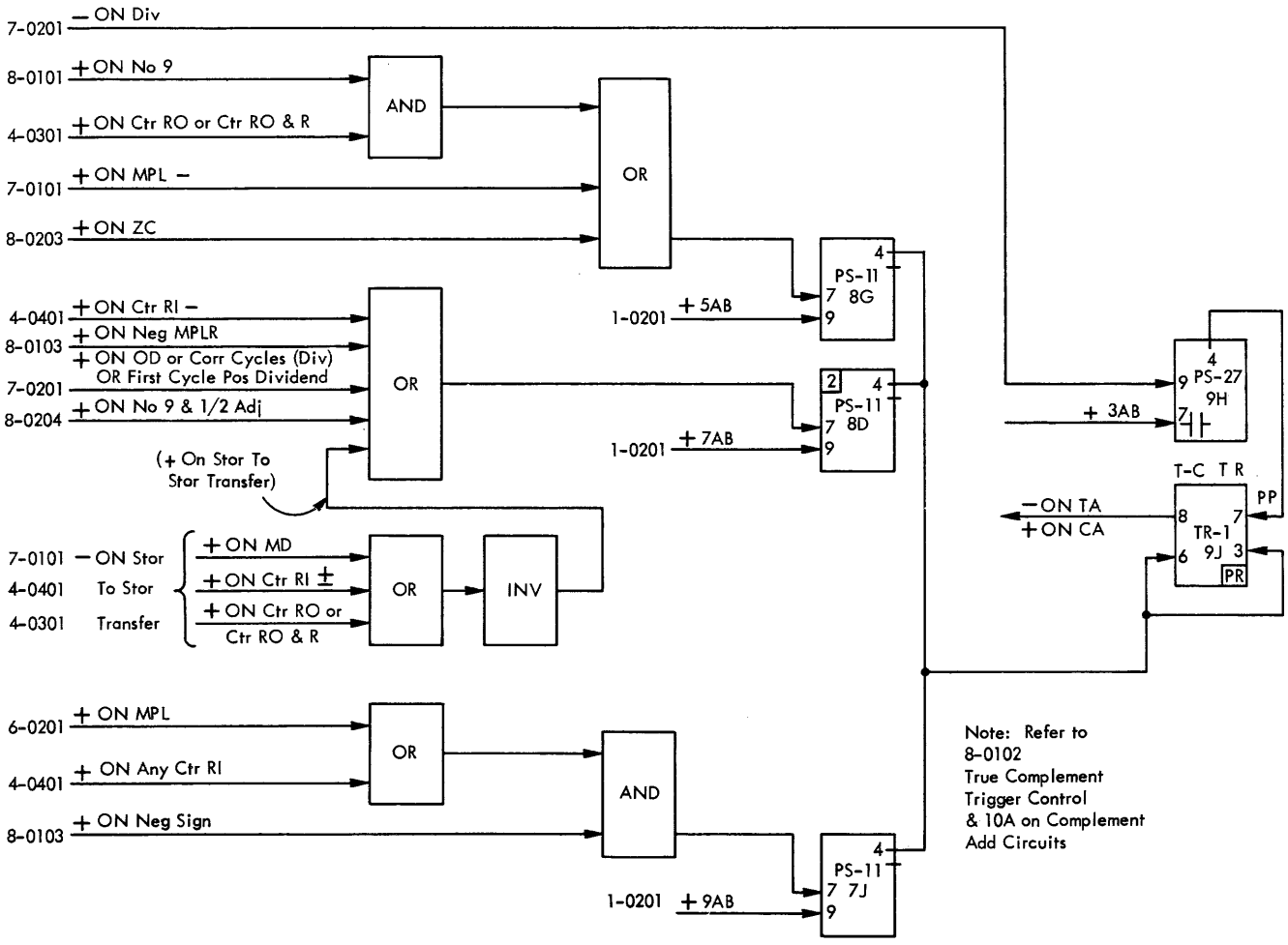

Figure 125. Logic Diagram of 604H TC Trigger Controls

cycle on its other grid. Therefore with the TC trigger in its OFF (complement action) status, the 10A pulse gets through the switch to turn on the add-subtract triggers. When the TC trigger is ON (its true transfer status), the 10A pulse is blocked at the switch. The outputs of the two inverters between the TC trigger and the 10A switch are also used to provide "plus on CA" and "plus on TA" conditioning voltages for use where needed within other 604 circuits.

The operation and control of the TC trigger during multiplication and division will be discussed under those headings in the next chapter. For our present, introductory discussion we will cover the control during transfers between Storage Units and into and out of the Counter.

Storage to Storage Transfer (G & H)

Storage Units always hold true form figures, regardless of the sign of the figure. Only if the Counter is involved will any complementing action ever be required. If the Counter is not in some way a part of the program step action, the machine assumes that a true transfer is called for (the TC trigger is thus set to true even on blank program steps). To retain the true form as a number group passes through the Add-Subtract Unit in moving from one Storage Unit to another, the 10A Complementing Action pulse must be blocked. The True-Complement trigger must be in its true (ON) status by 10A. Since the TC trigger is plate pulled OFF early in each cycle, a pulse must be applied to turn it ON for a storage to storage transfer.

H SUFFIX CIRCUIT

OBJECTIVE: (Page 8-0102.) Turn on the TC trigger for storage-to-storage transfer.

1. TC trigger plate pulled off at 3AB through PS-27 at 9H (division is not programmed).
2. No CTR RO or CTR RO and R signal from 4-0301 at 8AT.
3. No +(c) on CTR RI + or RI - from 4-0401 to 8 AT.
4. No +(c) on M-D from 7-0101 on $8AB_1$.
5. Negative output of 8AT and $8AB_1$ inverted and fed through cathode follower, $6C_2$.
6. +(c) on storage-to-storage transfer conditions diode switch, 8CT.
7. Switch 8D conducts at 7AB to turn on TC trigger.

G SUFFIX CIRCUIT

OBJECTIVE: (Transfer Controls portion of Figure 124.) Permit 7AB pulse to turn True-Complement trigger to true (ON).

1. At 1AB the TC trigger is plate pulled off through pentagrid switch unit at 5-7J (multiplication or division not programmed).
2. Unit at $5\text{-}3H_1$ cut off because no Counter Read-In action is involved.
3. Unit at $5\text{-}3H_2$ cut off because no Counter Read-Out action is involved.
4. Unit at $5\text{-}4J_1$ cut off because no multiplication is involved.
5. Combined plate line of the 3 input mixer goes plus, making grid 3 of 5-5H go plus.
6. Plus 7AB pulse makes 5-5H conduct, sending minus 7AB tapped level pulse to TC trigger, 5-6J, to turn it ON (True transfer status). NOTE: Plate voltage and plate load for all seven tubes feeding TC trigger is within the unit 5-5H. All TC controls will be killed if this unit is pulled. (Tube alone may be removed for analysis, if desired, without killing all other inputs.)
7. Minus output from left plate of TC trigger appears, after double inversion, as a minus grid 1 at 5-3K. 10A pulse blocked at 5-3K switch. True transfer will result.

TC Control During Counter Read-In Operations (G & H)

Counter Read-In Plus or Minus can be programmed and the sending unit itself can have a plus or minus figure stored. Each of the four possible combinations must properly set the TC trigger according to algebraic laws.

Counter Read-In Plus of a Plus Figure. This combination requires an addition (complement entry) to the Counter. The TC trigger is pulled off (complement status) at the start of a cycle. All possible TC trigger flipping pulses are blocked, leaving it in the complement transfer status.

FOR THE H SUFFIX MACHINE an examination of Figure 125 will show that the 5AB, 7AB and 9AB switches 8G, 8D, and 7J are blocked. The conditioning levels can be similarly found on *System* page 8-0102.

FOR THE G SUFFIX MACHINES an examination of the Transfer Controls section of Figure 124 will show that neither 5-5H nor $5\text{-}4G_2$ will send any pulses to the TC trigger. 5-5H is killed because the Counter is being used. 5-1J is blocked because we are considering a read-in plus (not minus). 5-2J is inactive because there is no negative sending unit sign. 5-3J is inactive because we are involved with a read-in (not roll out).

Counter Read-In Plus of a Minus Figure. This operation requires a true (subtracting) entry to the Counter. A single (9AB) pulse will be allowed to reach the TC trigger and turn it to true (ON).

FOR H SUFFIX MACHINES all conditions are as in the first example except one. Now the sign exit channel is high because of the negative figure being read out of the sending unit. On page 8-0102 the PS-11 unit at 7J will pass the 9AB pulse because its grid three will be plus. Both Cathodes of the diode switch unit at 7HT will be plus. Pin 4 of the DS unit is plus because of the negative sign. Pin 6 is plus because of the "plus on Ctr RI" level through $7HB_2$ and $8F_2$.

FOR G SUFFIX MACHINES the conditions are the same as in the first example except for the 9AB action through 5-2J (Figure 124). Grid 3 of the pentagrid switch unit at 5-2J is plus because this is a read-in operation. Grid 1 receives a plus 9AB pulse from the sign entry channel because a negative figure is being read out from the sending unit. The minus 9AB output is double inverted through 5-4J_2 and 5-4G_2 and appears as a minus 9AB (t) to flip the TC trigger to true.

Counter Read-In Minus of a Plus Figure. This operation requires a true (subtracting) entry to the Counter. A single (7AB) pulse will be allowed to reach the TC trigger to turn it to true (ON).

FOR H SUFFIX MACHINES all conditions are as in the first example except for the action through the 7AB switch at 8D (page 8-0102). Grid three (pin 7) of the PS-11 unit is plus because of the "plus on Ctr RI Minus" level through the DS-5 section at 8AB_2. The —7AB (t) output from 8D will flip the TC trigger to true (from its plate pulled OFF status).

FOR G SUFFIX MACHINES all conditions are as in the first example except for the 7AB action through the switch unit at 5-1J (Figure 124). Grid three of this pentagrid switch unit is plus because of the "plus on Ctr RI Minus" (from 1-5P_1). The plus 7AB pulse on its grid 1 will cause a minus 7AB output. The minus 7AB output is double inverted through 5-4J_2 and 5-4G_2 and appears as a minus 7AB (t) pulse to turn the TC trigger on (to true).

Counter Read-In Minus of a Minus Figure. By algebraic law this requires a complement (plus or addition) entry to the Counter. Two pulses will reach the TC trigger, the 7AB Counter Read-In Minus pulse discussed in example three above and the 9AB Minus Sending Unit Pulse discussed in example two above. The two circuits are exactly the same as discussed above and will not be repeated. The TC action history is as follows: At 3AB (1AB for G and earlier suffix machines) the TC trigger is plate pulled to complement (OFF). At 7AB the TC trigger is flipped to true (ON) by the RI Minus operation. At 9AB the TC trigger is flipped back to complement (OFF) by the minus sign of the sending unit. The plus output from the left plate of the TC trigger is double inverted and conditions plus the grid of the 10A pentagrid switch which lets the 10A pulse through. A complementing action through the A/S Unit results.

READ-OUT TO PUNCH

RESULTS CAN BE punched into cards from the General Storage Units and from the Counter. Results in the card must be punched in true form in all cases. Since the General Storage Units always contain true figures, a non-varying form of read-out can be used for them. The Counter, on the other hand, can hold either a true or a complement figure at punching time. This requires a controllable type of read-out circuit for the Counter. There are thus two types of read-out used by the 604, Inversion Read Out and Straight Read Out. Inversion Read Out is used whenever there is a true figure in the electronic unit that is punching (*always* with General Storage Units, and with the Counter whenever a *minus* balance is held). Straight Read Out is only used for the Counter when the Counter has a plus (complement) figure held at punching time. Inversion Read Out is the more frequently used circuit, but Straight Read Out is the simpler and will be discussed first to introduce the general principles of converting a stored electronic trigger assembly condition into a punched card hole.

Each punch exit hub on the 521 control panel is fed from the cathode of a separate punch thyratron. These thyratrons are supplied with plus 65 volt circuit breaker controled impulses from 1 tooth before to 3 teeth after each line of index 11 through 9. (The punch *sign exit* thyratrons are supplied from line of index to 3 teeth after.) If a positive pulse is sent to the grid of a thyratron having potential applied to its plate, the thyratron will fire. If a punch magnet coil is wired to the cathode exit hub, that magnet will be energized and a hole will be punched in the card. The punch out problem resolves itself down to simply supplying a positive shift to the thyratron grid at the proper line of index to cause the desired digit to punch.

Positive Counter Balance Read Out to Punch

With a complement figure in the Counter (plus figure), Straight Read Out can be used. With this system a single pulse is entered at each line of index 0 through 9 into each trigger assembly reading out. Carry is suppressed on read-out since the Primary Timer is not running. The ten CB controlled pulses roll each position around and back to zero, just as with an electronic roll out (though at a much slower stepping rate). At some line of index each position will individually go from 9 to 0 and turn on its carry trigger. The resulting plus shift from the right plate of the carry trigger

COUNTER READ OUT POSITIVE BALANCE (+123456789)

C B TIME	C B PULSES	COUNTER (* Indicates punching occurs)												
12.7	(End of Calc)	9	9	9	9	8	7	6	5	4	3	2	1	0
0.0	1	0*	0*	0*	0*	9	8	7	6	5	4	3	2	1
1.0	1	1	1	1	1	0*	9	8	7	6	5	4	3	2
2.0	1	2	2	2	2	1	0*	9	8	7	6	5	4	3
3.0	1	3	3	3	3	2	1	0*	9	8	7	6	5	4
4.0	1	4	4	4	4	3	2	1	0*	9	8	7	6	5
5.0	1	5	5	5	5	4	3	2	1	0*	9	8	7	6
6.0	1	6	6	6	6	5	4	3	2	1	0*	9	8	7
7.0	1	7	7	7	7	6	5	4	3	2	1	0*	9	8
8.0	1	9	8	8	8	7	6	5	4	3	2	1	0*	9
9.0	1	9	9	9	9	8	7	6	5	4	3	2	1	0*
	TOTAL 10	Counter restored to original value.												

Figure Punched 0 0 0 0 1 2 3 4 5 6 7 8 9

Figure 126. Counter Operation for Punch Read-Out of a Plus Figure (Straight Read-Out)

is fed to the Thyratron grid, causing it to fire and energize the punch magnet. With the cards feeding 12 edge first (as they do) and with a complement figure in the Counter, the correct hole is punched with no further complications. The chart of Figure 126 shows the Counter step by step action as each of the index time pulses is applied. Note that after the ten index time pulses have been applied, the Counter is back to its original starting value. This non-destructive punch read-out allows running totals to be accumulated, if desired.

The index time pulses are controlled by 521 circuit breakers. To prevent troubles due to contact bounce, the CB inmpulses are used to control a trigger. The output of the trigger is then shaped to create an electronic type, CB timed pulse.

H SUFFIX CIRCUITS

OBJECTIVES: To advance each position of the Counter at index time and to energize the punch magnets. COUNTER READ-OUT or COUNTER READ-OUT AND RESET must be wired. (Pages 1-0501, 4-0101, and Figure 126.)

1. CB RO trigger (page 1-0501) turns on each index point and off each mid-index point from 0 through 9.5.

2. Output is fed through CF unit, $4Z_1$, to condition PS-12, 1G.

3. PS-12 unit conducts 10 CB RO pulses when Counter is wired to read out or read out and reset.

4. CB RO pulses are fed to Counter circuit, 4-0101 through inverter $1J_2$ and CF-5 unit, $1C_1$.

5. The 10 CB RO pulses are fed through the Counter read-out inverters to advance each Counter position ten times.

6. When a counter position goes from 9 to 0, the carry trigger for that position turns on.

7. The positive output from the carry trigger causes the thyratron in the position to conduct. Conduction takes place as long as plate voltage is applied through EC130.

8. Load of thyratron is a punch magnet, and the punch magnet is energized through control panel wiring when thyratron conducts.

G SUFFIX CIRCUITS

OBJECTIVE: To advance each position of the Counter at index time and to energize the punch magnets. COUNTER READ OUT or COUNTER READ OUT AND RESET must be wired. (Figures 119, 120, and 127.)

1. (Figure 127.) RO CB pulse trigger is turned on at each index time and off at five teeth past each index, 0 through 9.

2. Minus shift when trigger comes on feeds through input capacitor to grid of $1\text{-}9F_1$ which is biased for normal conduction. Plus pulse spike from plate of $1\text{-}9F_1$ each index time 0 through 9 feeds to grid of $3\text{-}3C_1$. (Figure 119.) (Plus pulses to grid of $1\text{-}9F_1$, when trigger goes off have no effect.)

3. Index time plus pulses pass through $3\text{-}3C_1$ and $3\text{-}10N_2$ to appear as plus index time pulses on grid 3 of 3-10J.

4. If Ctr RO or Ctr RO and R is impulsed from CARD CYCLES hub on punch control panel, grid 1 of 3-10J will be positive and permit minus index pulses to appear on plate.

5. 3-10M sends plus index time pulses to roll-out inverters, advancing each counter position by one each index time (Figure 120).

6. As each position steps from 9 to 0, the corresponding carry trigger comes on. The right plate sends a plus shift to the capacitor input punch thyratrons, 1M through 1Z.

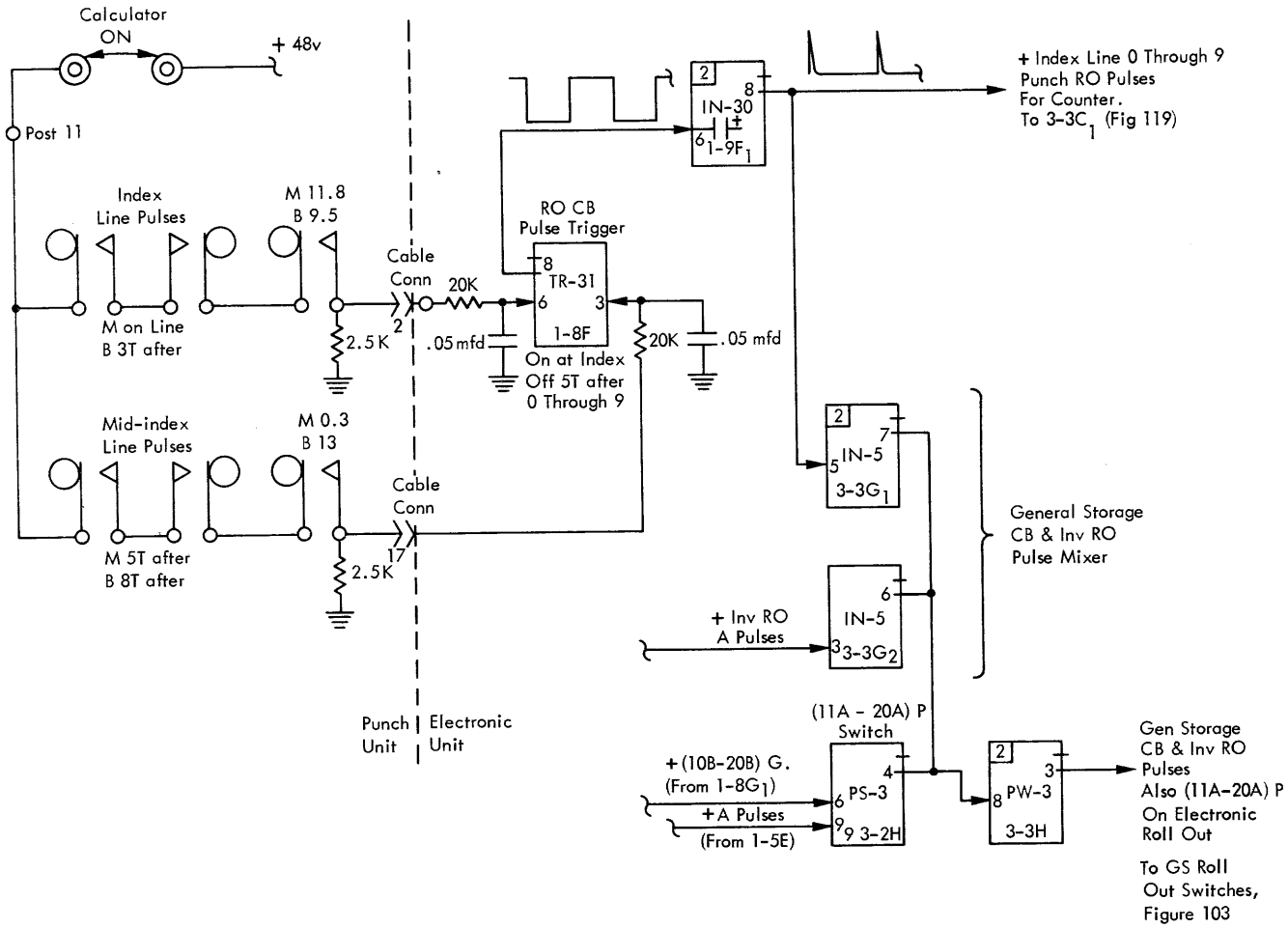

Figure 127. Punch Roll-Out Pulse Generation and Distribution

7. Each thyratron, as fired, conducts until three teeth after line of index when plus 65 volt anode potential through EC130 is removed.

8. Punch magnets wired to thyratron cathode Punch Exit hubs will be energized and cause punching as illustrated by Figure 126.

9. Carry triggers are reset at 5 teeth past each index (approximately) by pulse through 3-1C (Figure 119).

F SUFFIX NOTE

In F and earlier machines an inverter tube isolates each carry trigger from its thyratron unit. Input to the inverter is taken from the LEFT plate of the carry triggers to secure needed plus shift to thyratron grid as trigger comes on.

The F suffix and earlier circuit for carry trigger reset during punch out is also different. A trigger at 1-8K is CB controlled to come on at 2 teeth before the line of index and go off 2 teeth after the line of index. The plus shift from the right plate of 1-8K at 2 teeth before the line of index is fed to the unit at 1-9K. The power unit at 1-9K peaks, inverts, and supplies a tapped output level pulse which is applied to the left grid of each of the carry triggers to turn them off prior to each line of index CB RO pulse.

Inversion Read Out Operation (G & H)

Using the Straight Read Out system just described it was seen that a complement result in the Counter punched out as a true figure in the card. Had we started with a true figure, the same punch out system would have punched a complement figure in the card. Since all results in the General Storage Units, as well as minus answers in the Counter, are in true form, it becomes important to be able to punch out true figures as true results in the card. The Inversion Read Out circuit serves this function.

With the Straight Read Out method we rolled the Counter forward by one at each cycle point to cause a complement figure to punch out as true. It would seem logical then that, if we start with a true figure, a

true answer will punch if we can roll the Counter backward by one at each cycle point. Since electronic digital storage assemblies don't roll backward directly, the same effect is obtained by entering 9 pulses at each cycle point. With carry suppressed in the Counter, and no carry available in Storage Units, each position will end up one shy of its original starting point after each 9 pulse entry.

The 9 pulse entry process introduces a second problem. The point for punching to occur is sensed from the output shift obtained when each digital storage assembly jumps from 9 to 0. If 9 pulses are added at each cycle point, almost all positions will go from 9 to 0 at each cycle point from some one of these pulses. A badly laced card would result. To solve this problem the 9 pulses are entered as two groups. An 8 pulse high speed burst is entered at mid-index time plus one pulse at index time. At mid-index time there is no plate voltage supplied to the punch thyratrons. Any position which goes from 9 to 0 at mid-index will send a plus pulse to the thyratron grid through the input capacitor, but the pulse will have no effect. In the case of the Counter, the carry triggers will be turned on as the positions go from 9 to 0 at mid-index, but a reset pulse right after will turn them off again to prepare for the desired index time action. The rule to remember for punching out is this: when a position goes from 9 to 0 at the line of index, punching will occur.

Figure 128 illustrates the step by step action of Inversion Read Out from a General Storage Unit (or from the Counter if it contains a true, minus figure). There are several points to note on this illustration. First is the 9 (not just 8) pulse burst entered at 5 teeth before zero. This 9 pulse burst primes the positions so zero's can be punched (any zeros will go to 9 at 5 teeth before 0 and then go from 9 to zero at the 0.0 line of index). The second item is the burst of 9 pulses at 5 teeth past 9, after all punching is completed. These 9 pulses bring the total pulse count applied to each position to an even 100 which restores the original digit value held before punch-out. This non-destructive punch-out is helpful in some customer applications.

Circuitwise the Inversion Read-Out problem resolves itself mainly to creating mid-index time bursts of 8 high

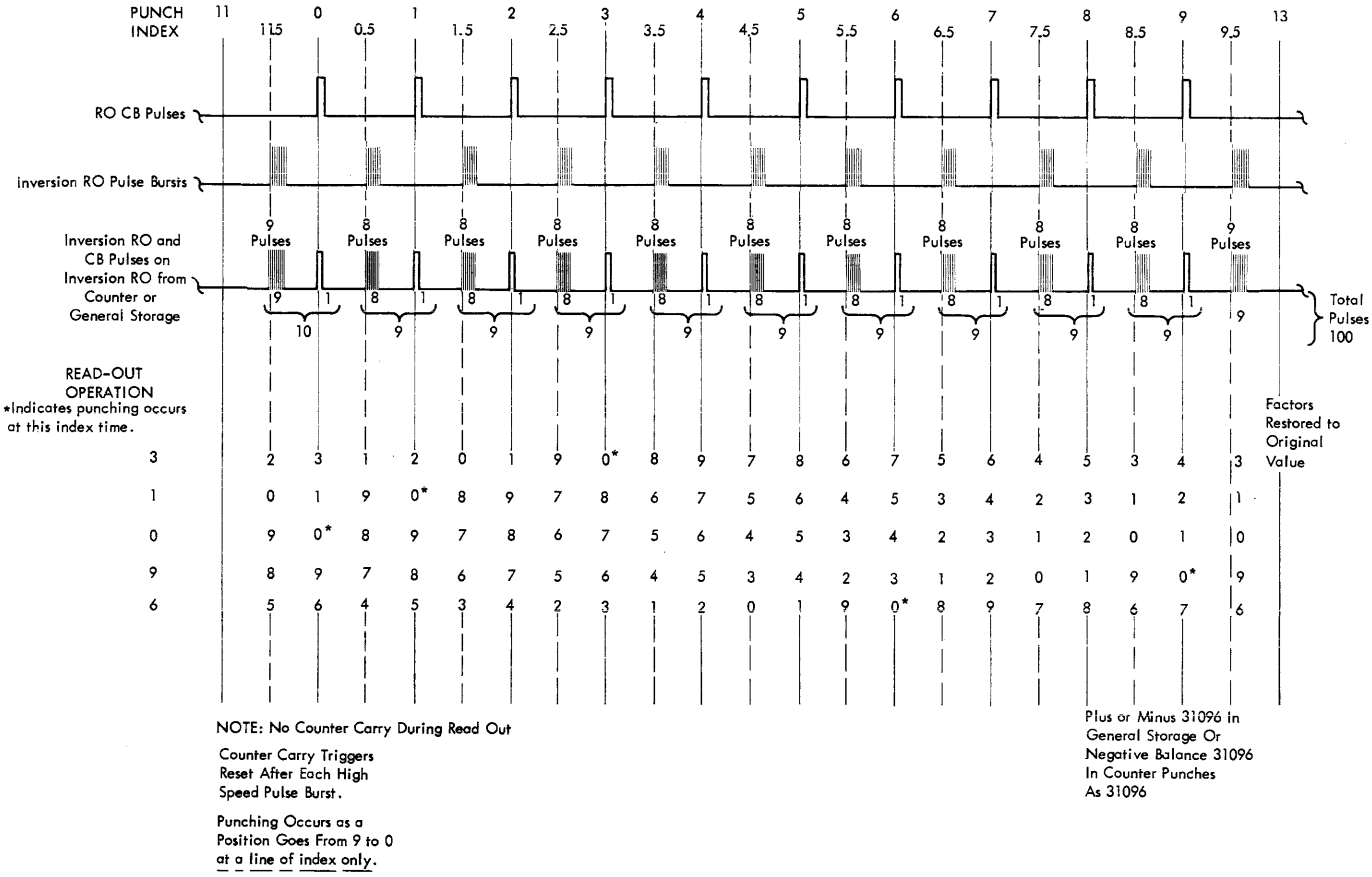

Figure 128. Principles of Inversion Read-Out (G and H)

speed pulses which can be mixed with the index time pulses already discussed under Straight Read-Out. The circuit must also be able to provide the 9 pulse bursts at 5 teeth before 0 and at 5 teeth after 9. This application of the inversion pulse bursts to the Counter must be controllable. This will depend upon the true or complement nature of the figure in the Counter at punching time. (The 9-No 9 trigger supplies this needed information.) A means of resetting the Counter carry triggers after each pulse burst is also needed.

The high speed pulses used during inversion read out are bursts of "A" pulses. "A" pulses are constantly being generated as long as power is on. Since these pulses come at a frequency of 50 kc, the time required for an 8 or 9 pulse burst is insignificant for a punch controlled operation. The objective of the inversion read-out timer is to gate an "A" pulse switch tube so only the desired 8 or 9 "A" pulses will pass through in any one burst. The gate to the switch tube must start and end at a B time to prevent partial "A" pulses from slipping through the switch tube and causing unreliable roll-out operation. Since the Primary Timer is not running during punching time, the circuit must be self-timing.

Before proceeding to the actual circuits, the simplified circuit operation diagram of Figure 129 should be understood. The actions should be gone through in the order indicated by the circled numbers. A key item is the "A" pulse control trigger which comes on and goes off at "B" time to generate the gate needed to select the proper number of "A" pulses for the burst. A second key item is the Inversion Roll Out Timer. This is a special arrangement of four triggers which normally gives a carry pulse after 8 input pulses but which can be pre-set at any desired time to require 9 input pulses to secure a carry.

H SUFFIX CIRCUITS

PUNCH INDEX TIME 11.5

OBJECTIVE: (Page 1-0501.) To provide nine high-speed pulses to advance the General Storage Units and/or the Counter.

1. Inversion RO control trigger turns on at mid-index time to turn on B pulse control trigger.

2. The PS-5 unit, 2F, conducts next B pulse after 11.5 to turn on A pulse control trigger.

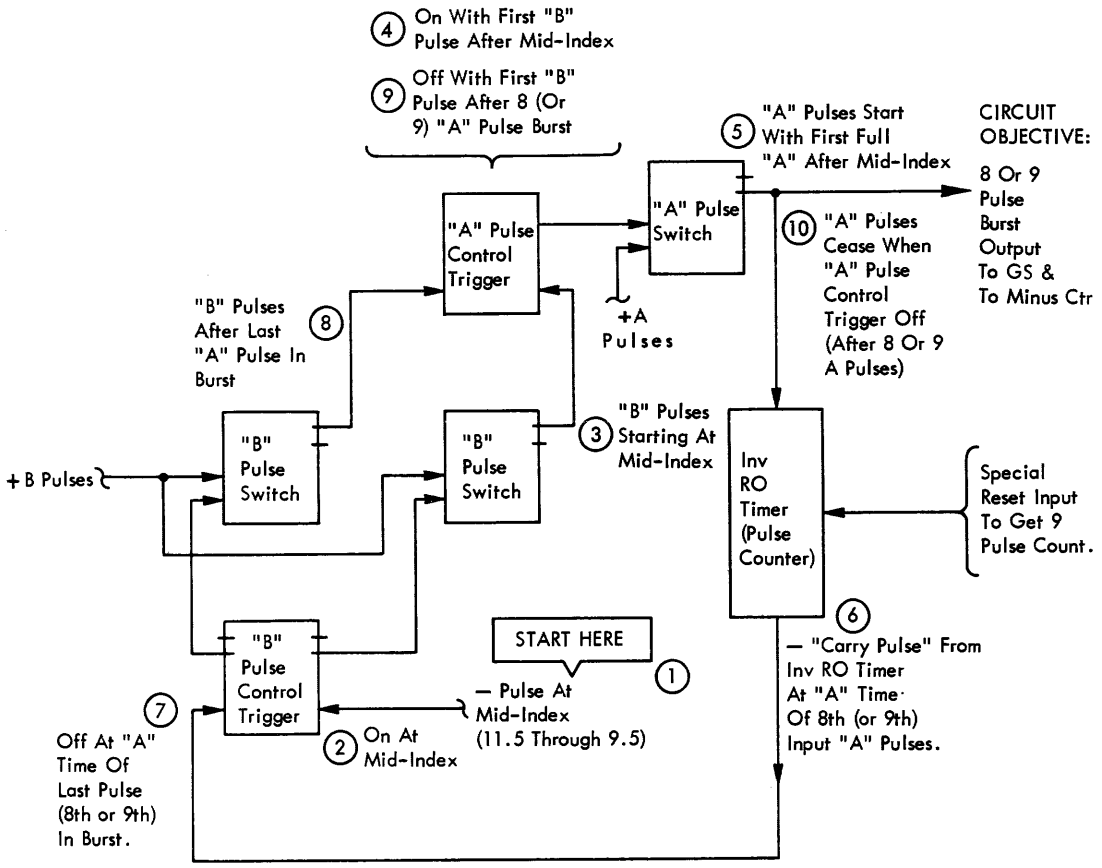

Figure 129. Inversion Roll-Out Circuit Operation Flow Diagram (G and H Suffix)

3. The A pulse mixer conducts A pulses while A pulse control trigger is ON.

4. Output of 2J is inverted and feeds high-speed inversion read-out pulses through CF unit $6S_2$ to supply high-speed inversion read-out pulses to the Storage Units, 3-0101.

5. Output of 2J is fed through a CF switch $1E_1$ ($1E_2$ if Counter is wired to read out and has a negative balance).

6. Output of 2J is also inverted twice at $1J_1$ and $1K_2$ to feed inversion read-out timer.

7. After seven A pulses, Storage Units and Counter have advanced seven times and inversion RO timer contains 7.

8. Eighth A pulse through 2J advances Storage Units, and timer contains 8.

9. Ninth A pulse through 2J advances Storage Units and Counter, turns on first position of timer, and turns off eighth position of timer.

10. Output of eighth position trigger turns off B pulse control trigger.

11. The PS-5 unit, 2E, conducts next B pulse to turn off A pulse control trigger.

12. No high-speed inversion read-out A pulses can feed Storage Units, Counter or timer when A pulse control trigger is OFF.

13. Positive output of A pulse control trigger is fed through CF unit $2H_1$ to carry trigger reset circuit (Page 4-0301).

Thus the Storage Units and Counter receive nine high-speed pulses at 11.5 index time, the inversion read-out timer is left with the first position ON, and the carry triggers are reset OFF. It must be remembered that CB pulses are also occurring on the line of index to cause punching.

PUNCH INDEX TIME 12.9 THROUGH 8.9

Thyratron anode voltage is available from one tooth before each line of index until three teeth after each line of index for all digit value, x through nine. A 65v plate potential is applied when contacts P18-P19 in parallel and P20-P21 in parallel are closed.

PUNCH INDEX TIME 0.0. THROUGH 9.0

OBJECTIVE: To advance each position of the Counter or General Storage at index time and energize the punch magnets when the Counter is wired to read out, or read out and reset, or when a General Storage Unit is wired to read out (pages 1-0501, 3-0201, or 3-0202, and 4-0101).

1. CB RO trigger 4Y turns on at index time and off at mid-index time from 0.0 through 9.5 time.

2. Trigger output is fed through CF-1 unit, $4Z_1$ to PS-12 unit, 1G. Negative CB pulse is inverted at $1J_2$, through CF switch, 1C, to feed CB pulse to the Counter.

3. The output from $4Z_1$ is also fed through CF-10 unit, 3W, to 7-0101, and then to the Storage Units.

PUNCH INDEX TIME 0.5 THROUGH 8.5

OBJECTIVE: (Page 1-0501.) To provide eight high-speed pulses to advance the General Storage Units and Counter. The RO timer position 1 is on since last mid-index time.

1. Steps 1 through 6 are the same as 11.5 punch index time described above.

7. After seven high-speed pulses, Storage Units and Counter have advanced seven times and timer contains 8.

8. Eighth high-speed inversion read-out pulse through 2J advances Storage Units, Counter, and timer.

9. First position of timer turns on and eighth position turns off.

10-13. Steps 10 through 12 are the same as 11.5 punch index time described above. At each mid-index point from 0.5 through 8.5, eight inversion read-out A pulses are fed to the Storage Units and Counter.

PUNCH INDEX TIME 9.5

OBJECTIVE: (Page 1-0501.) To feed nine high-speed pulses to the Storage Units and Counter to advance the units to their original value.

1. Inversion read-out timer reset trigger, 1M, turns on at 9.0 and off at 9.5 time.

2. Output at 9.0 time is inverted and fed through two inverters $1L_1$ and $1L_2$.

3. Output of $1L_2$ turns off first position trigger of inversion read-out timer.

4. Output of $1L_1$ prevents the second position trigger from turning on when the first position trigger turns off.

5. Operation of inversion read-out circuit is now same as steps 1 through 13 at 11.5 time.

G SUFFIX CIRCUITS

PUNCH INDEX TIME 11.5

OBJECTIVE: (Figure 130.) To provide nine high-speed pulses to advance the General Storage Units and/or the Counter.

1. Inversion RO control trigger turns on at mid-index time to turn on B pulse control trigger.

2. The PS-3 unit at 3-1D conducts with the next B pulse after 11.5 to turn on the A pulse control trigger.

3. The A pulse PS unit at 3-2A starts feeding minus A pulses to inversion RO timer. The A pulse inverter switch ($3\text{-}9F_2$ and $3\text{-}3C_2$) sends plus A time pulses to Ctr and GS unit control circuits.

4. Counter inversion RO control, Figure 119. PS unit at 3-4C will only pass inversion RO pulses if Ctr in true form (No 9). PS unit at 3-10J will only pass pulses if Ctr RO called for.

5. General Storage RO pulses pass through IN unit at $3\text{-}3G_2$ (Figure 127) and PW unit at 3-3H which supplies common pulses to all GS units. (Typical GS unit, Figure 103, and GS RO control, Figure 104.)

6. (Figure 130.) Minus A pulses from PS unit at 3-2A feed to Inv. RO Timer.

7. After seven A pulses the GS units and Ctr reading out have advanced by seven and Inv RO timer is standing at seven (3-2B, 2C, and 2D ON).

8. Eighth A pulse advances rolling out units and sends Inv RO Timer to 8.

9. Ninth A pulse advances rolling out units and causes following actions in Inv RO Timer: First position trigger, 3-2B, comes on and last position trigger, 3-3A, goes off, sending minus shift from right plate to left input of B pulse control trigger.

10. B pulse control trigger turns off.

11. The PS-3 unit at 3-1H conducts on next B pulse and turns off A pulse control trigger.

12. Inversion RO pulses (to Ctr and GS units through A pulse inverter switch and to Inv RO timer through A pulse PS unit) are stopped. Note that first position trigger of Inv RO Timer has been left ON. On the next burst cycle it will only require 8 input pulses to get carry from Timer.

13. When A pulse control trigger goes off, the plus shift from left plate is sent to Counter carry trigger reset power unit 3-1C, (Figure 119) to set all carry triggers back to OFF.

The Storage Units reading out and the Counter if reading out and minus receive nine high-speed pulses at 11.5 time. It must be remembered that CB pulses are being generated at the line of index to cause punching. Carry triggers have been reset. Inversion RO Timer is left so only 8 pulses will pass at next cycle point.

PUNCH INDEX TIME 12.9 THROUGH 8.9

Thyratron plate voltage is available from 1 tooth before each line of index until 3 teeth after for x through 9 from 521 circuit breakers. A plus 65 volt potential is applied when contacts close.

PUNCH INDEX TIME 0.0 THROUGH 9.0

OBJECTIVE: To advance each position of the Counter or General Storage at index time and energize the punch magnets. Ctr RO or Ctr RO and R must be wired; or a GS unit must be wired to read out.

1. Figure 127. RO CB pulse trigger, 1-8F, turns on at index time and off at mid-index time from 0.0 to 9.5.

2. Trigger output is peaked and inverted through capacitor input IN unit $1\text{-}9F_1$. Plus pulses feed to $3\text{-}3C_1$ (Figure 119) for Counter index time advance.

3. (Figure 127.) Plus pulse output from $1\text{-}9F_1$ feeds to IN-5 at $3\text{-}3G_1$ and through PW-3 unit at 3-3H. Plus index time pulses from 3-3H are made available at each GS roll out switch grid 1.

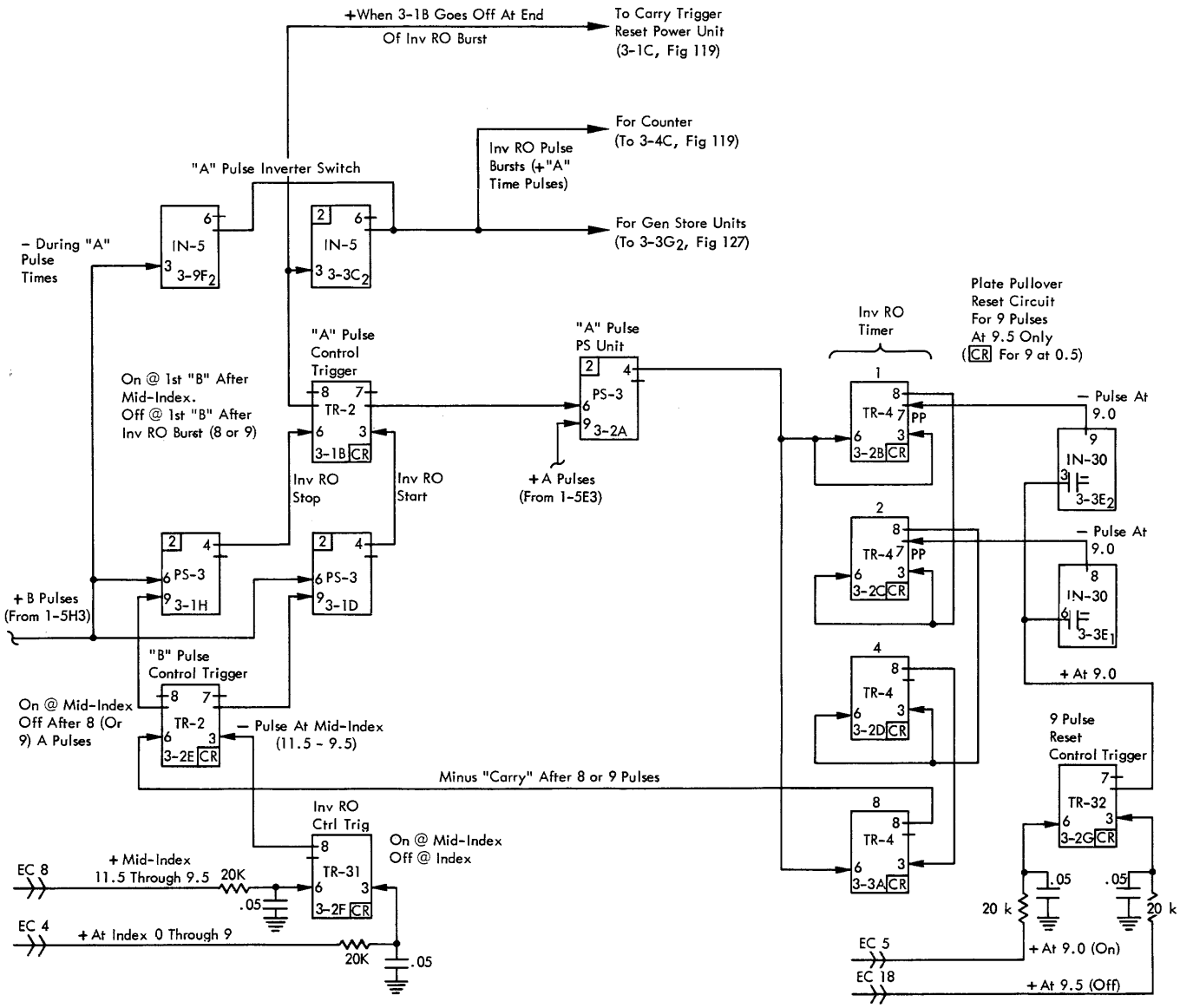

Figure 130. Inversion Read-Out Pulse Generation Circuit (G Suffix)

PUNCH INDEX TIME 0.5 THROUGH 8.5

OBJECTIVE: (Figure 130.) To provide 8 high-speed pulses to advance the units punching out. (The first stage of the Inv RO Timer is ON from action at 11.5.)

1-6. Steps 1 through 6 are the same at 11.5 index time described above.

7. After 7 high speed pulses (which have advanced positions punching out) the Inv RO Timer will stand at 8 (3-3A ON).

8. Eighth A pulse goes to positions punching out and also turns on first position of Inv RO Timer while turning OFF last position, 3-3A.

9. Minus shift from right plate of 3-3A turns off B pulse control trigger, 3-2E.

10. Actions to follow are identical to steps 11 through 13 of description above for 11.5 time.

PUNCH INDEX TIME 9.5

OBJECTIVE: To feed 9 high speed pulses to positions punching out at 9.5 to restore positions to original digit value. This is accomplished by turning OFF ALL Inv RO Timer triggers at 9.0.

1. (Figure 130.) The nine pulse reset control trigger, 3-2G, comes on under CB control at 9.0. It will turn off at 9.5.

2. Plus output at 9.0 from right plate causes conduction through IN-30 unit 3-3$E_{1 \text{ and } 2}$. Capacitor input causes pulsed output.

3. 3-3E_2 plate pulls Inv RO Timer trigger 1 OFF.

4. 3-3E_1 plate holds Inv RO Timer trigger 2 OFF so shift from trigger 1 will not turn it on.

5. Operation of circuit is now the same as discussed above for 11.5 time.

F SUFFIX NOTES

The inversion read out objectives for machines wired to the F suffix and earlier are identical to those discussed above, but the burst timer circuit is considerably different. It is given in block diagram form by Figure 131.

The pulse counter in this circuit is a three stage binary trigger arrangement that always gives a carry after 8 input pulses to it. The ninth pulse at 11.5 and at 9.5 is obtained by allowing one pulse (the first of the burst) to reach the units punching out, but not reach the 8 pulse counter. The 1 pulse delay trigger and its controlling circuit provides this action.

Figure 131 breaks into two separate areas which should be studied individually first. The Inversion Roll Out Timer portion of the circuit has as its sole objective the generation of a GATE (not pulses) which will allow the desired 8 or 9 pulses to pass through separate Counter and General Storage "A" pulse control switches. These switches are located within the complete roll out pulse control circuits portion of the diagram. It is the inverter unit at 3-3B_1 (controlled by the A pulse con-

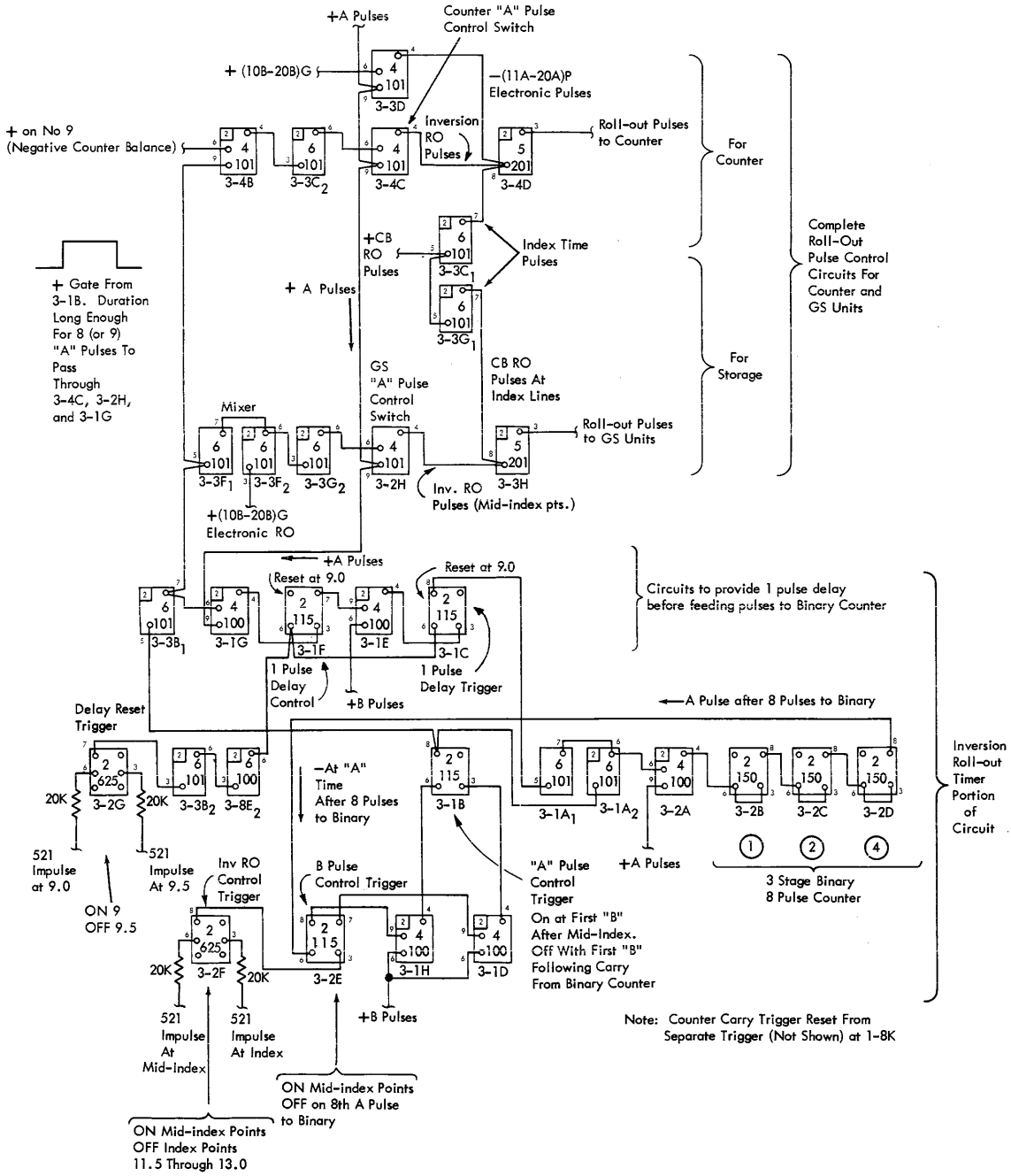

Block Diagram of Inversion Read-Out Circuits, F Suffix.

Figure 131. Block Diagram of Inversion Read-Out Circuits (F Suffix and Earlier)

trol trigger) that supplies the gate to the separate circuits for the Counter and the General Storage Units. It is the A pulse control trigger that is the key item in the circuit.

A summary of circuit operation follows:

Operation at 11.5 on the Punch Index

1. Punch interlock trigger 3-2F goes ON and flips gate control trigger 3-2E ON.

2. First +B pulses after 3-2E goes ON flips the gate trigger 3-1B ON.

3. First +A pulse after 3-1B goes ON feeds to all positions being read out and also flips the pulse delay control trigger 3-1F ON.

4. Next +B pulse turns the pulse delay trigger 3-1C ON.

5. +A pulses continue feeding to all positions being read out and start feeding to the binary group (3-2B, 2C, 2D).

6. After eight "A" pulses have fed to the binary group (9 to all positions being read out), the gate control trigger 3-2E is turned OFF.

7. The next +B pulse turns the gate trigger 3-1B OFF preventing any further A pulses to the unit being read out and to the binary group.

At O on the punch index the punch interlock trigger 3-2F is restored to its OFF status, and a CB RO pulse feeds to all positions being read out.

Operation at 0.5 on the Punch Index

1. Punch interlock trigger 3-2F goes ON and flips gate control trigger 3-2E ON.

2. First +B pulse flips gate trigger 3-1B ON.

3. +A pulses start feeding to all positions being read out and to the binary group (3-2B, 2C, 2D).

4. After 8A pulses to the binary group and to all positions being read out, gate control trigger 3-2E is turned OFF.

5. The next +B pulse turns the gate trigger 3-1B OFF and terminates the inversion RO operation at this point.

At 1 on the punch index the punch interlock trigger 3-2F is turned OFF, and a CB RO pulse feeds to all positions being read out.

The above inversion RO operation repeats at each mid-index point through 8.5, and at 9 the delay reset trigger, 3-2G, turns ON in addition to the normal operation. The pulse delay triggers 3-1F and 3-1C are turned OFF to restore the inversions RO circuits to the same status as at the beginning of read-out. Then the inversion RO operation at 9.5 is exactly the same as at 11.5.

Sign Punch Out Circuits (G & H)

The sign punch circuit operation is illustrated on Figure 111 and has been discussed earlier. The following comments are appropriate at this time:

When a General Storage Unit or the Counter is punching out, the status of its sign storage trigger is sensed. In the case of the Counter the "sign storage trigger" is the 9-No 9 trigger. If the sign storage trigger is ON, (9-No 9 trigger is OFF) a negative result is indicated and a plus input will be supplied to the corresponding sign punch thyratron continuously throughout the punching cycle. The sign punch thyratron units do not have capacitor inputs. Their grids are thus kept primed to fire throughout the cycle. Plus 65 volt impulses from line of index to 3 teeth after, from 11 through 9, are supplied to the sign punch thyratron plates. The thyratron will conduct each cycle point, 11 through 9 to indicate a negative result. Any punch magnet wired directly to the corresponding SIGN EXIT hub will pick and cause a punch each cycle point, 11 through 9. The card will be laced, except for the 12 hole. Digit selectors or other controls are normally used to select a particular hole to be punched.

It must be noted that a relay point in the 521 punch connects the sign punch thyratron output to the units position punch exit of the corresponding GS or Counter Unit during eleven (X) time. Unless eliminated by extra board wiring, any negative figure punched out will be automatically identified by an X punch over the units position.

Specialized Calculating Circuits

THIS CHAPTER contains descriptions of the 604 circuits designed to perform a specialized function. Multiplication, Division, Electronic Digit Emitters, Zero Check, Balance Test for Step Suppression, Balance Test for Select Pickup, and Half Adjust are in this category. Extensive use will be made here of the basic operations discussed in the preceding chapters.

The G and H suffix *circuit details* should be studied separately, particularly for multiplication and division. After one set of details is understood, the remaining one can be learned with less risk of confusing the two.

MULTIPLICATION

MULTIPLICATION is performed in this machine by a repeated entry of the multiplicand factor into the Counter. The multiplier must be in the MQ Unit, but the multiplicand can be in *any* other Storage Unit. The product will be developed in the Counter. Since there is no automatic reset of the Counter from a multiplication instruction, the product can, if desired, be developed on top of any figure already in the Counter from previous programs. The Counter must otherwise be reset by a Ctr RO and R instruction on a program preceding the multiplication.

The over and over Counter entry process used for 604 multiplication is internally controlled. The values of the multiplier digits determine the number of times that the multiplicand is to be entered into the Counter. The order of each multiplier digit (i.e., units, tens, etc.) determines which positions of the Counter will receive the multiplicand. The MQ Unit, which holds the multiplier, has a five digit maximum capacity. With coupled Storage Units, up to an eight digit capacity is available for the multiplicand. The largest product that can result from such a combination is thirteen digits. It is for this reason that the Counter was designed as a thirteen position unit.

It is possible to use a multiplier larger than 5 digits or a multiplicand larger than 8 digits or both. The problem is solved by control panel wiring and uses two or more program steps. The larger factors are split into parts within the capacity of the machine. These are then handled separately to develop partial products which are finally combined. The 604 *Manual of Operation* provides the wiring details.

Principle of Multiplication

An example of multiplication by repeated addition is shown in Figure 132. This method of multiplication is the simplest. It is not feasible for mechanical machines because the time required for a multiplication would be too great. Electronic addition, however, is so rapid that it permits use of this simple method.

Observe from Figure 132 that shifting is in the reverse order to that customarily done when multiplying manually. The order of shifting makes no difference when multiplying but must be from the highest order to the lowest when dividing. To simplify machine design the shift unit is therefore arranged to operate automatically from CS5 to CS1 for both multiplying and dividing.

Figure 132 indicates that a zero in any position causes column shifting only; no addition occurs in the Counter as a result of a 0 in the multiplier.

The machine determines the value of the multiplier digits by means of the *secondary timer* and associated circuits. The secondary timer consists of one position of a storage counter. The multiplier digits transfer one at a time into the secondary timer. These cycles, when a digit is transferred into the secondary timer, are called *test cycles.* The number transferred to the secondary timer determines how many times the multiplicand is to be transferred to the Counter. Multiplication Counter entry cycles are called *adding cycles* regardless of the sign of the entry.

A test cycle is taken for each multiplier digit during which the 9's complement of the multiplier digit is

PROBLEM: 12 x -144 = -1728
Multiplier (12) in MQ
Multiplicand (-144) in GS 4

NOTE: Minus Multiplicand used in this example so a true figure will develop in counter. This is somewhat easier to follow numerically.

CYCLE 1 Test Cycle	CYCLE 2 Test Cycle	CYCLE 3 Test Cycle	CYCLE 4 Test Cycle	CYCLE 5 Adding Cycle	CYCLE 6 Test Cycle	CYCLE 7 Adding Cycle	CYCLE 8 Adding Cycle
Shift to CS5 When Multiply Programmed. Transfer 9 to Secondary Timer from MQ. Add 1 at 1A. Secondary Timer goes to 0. Column Shift to CS4.	Transfer 9 to Secondary Timer from MQ. Add 1 at 1A. Secondary Timer goes to 0. Shift to CS3.	Transfer 9 to Secondary Timer From MQ. Add 1 at 1A. Secondary Timer goes to 0. Shift to CS2.	Transfer 8 to Secondary Timer from MQ. Add 1 at 1A. Secondary Timer goes to 9.	Transfer 144 to Counter in CS2 Position. Add 1 to Secondary Timer at 1A. Secondary Timer goes to 0. Shift to CS1.	Transfer 7 to Secondary Timer from MQ. Add 1 at 1A. Secondary Timer goes to 8.	Transfer 144 to Counter in CS1 Position. Add 1 to Secondary Timer, Which Goes to 9.	Transfer 144 to Counter in CS1 Position. Add 1 to Secondary Timer, which goes to 0. Tertiary Timer CS1 Trigger Goes Off to Signal End of Multiplication.

CYCLE	TIME	OPERATION	CS	SEC. TIMER	COUNTER
				0	9 9 9 9 9 9 9 9 9 9 9 9 9
1	8A(H), 9A(G)	Tertiary Timer to CS 5 Test MQ in CS 5	5	9	
	1A	CS on Secondary Timer output	4	0	
2		Test MQ in CS 4		9	Multiplying By Zero Causes Column Shift Only.
	1A	CS on Secondary Timer output	3	0	
3		Test MQ in CS 3		9	
	1A	CS on Secondary Timer output	2	0	
4		Test MQ in CS 2		8	
	23A	Counter Read In Control			
	1A	Advance Secondary Timer		9	9999999999999
5		Counter Read In - CS 2			0000000001440
	1A	CS on Secondary Timer output	1	0	
6		Test MQ in CS 1		7	
	23A	Counter Read In Control			
	1A	Advance Secondary Timer		8	
7		Counter Read In - CS 1			0000000001584
	1A	Advance Secondary Timer		9	
8		Counter Read In - CS 1			0000000001728
	1A	End multiply on Secondary Timer output in CS 1		0	

Figure 132. A Cycle by Cycle Example of 604 Multiplication by Over and Over Addition

transferred to the secondary timer. A single 1AB pulse is added at the end of each Primary Timer revolution. The number of additional 1AB pulses required to bring the secondary timer to 0 indicates the value of the multiplier digit. Hence the secondary timer will reach 0 after the proper number of adding cycles have been taken. As an example, a 2 in the MQ Unit transfers as a 7 to the secondary timer and then advances to 8 at the end (1AB) of the test transfer cycle. Two more cycles are required to advance the timer to 0. These two cycles are adding cycles. The number of adding cycles thus equals the value of the particular MQ Unit digit transferred to the secondary timer on the test cycle.

After completing multiplication by one digit, the shift unit is automatically shifted and the operation repeated. When multiplying, automatic column shifting is performed by the tertiary timer. The tertiary timer consists of a 5-stage open ring circuit which goes into operation when multiplication is programmed. The tertiary timer ring triggers control the shift unit in the manner shown on page 6-0201 and Figure 115.

Figure 133 shows a block diagram of the timers used in multiplication. The primary timer is running constantly as long as calculation is in process. The program unit normally advances one step each cycle of the primary timer. When multiplication is programmed, however, the program unit does not advance and the secondary and tertiary timers are placed in operation.

The tertiary timer starts in the CS5 position. Only five positions of the CS unit are required for multiplication because there are only five positions in the MQ Unit, which contains the multiplier.

During the first cycle of multiplication the complement of the digit in the 5th position of the MQ Unit is transferred to the secondary timer. Actually, the 9's complement of the digit is transferred to the timer, then a 1AB pulse from the primary timer makes it effectively the 10's complement. At the very end of the first cycle the 10's complement of the multiplier digit is therefore standing in the secondary timer. Since the secondary timer continues to receive a 1AB pulse each cycle throughout the multiplying process, this timer will

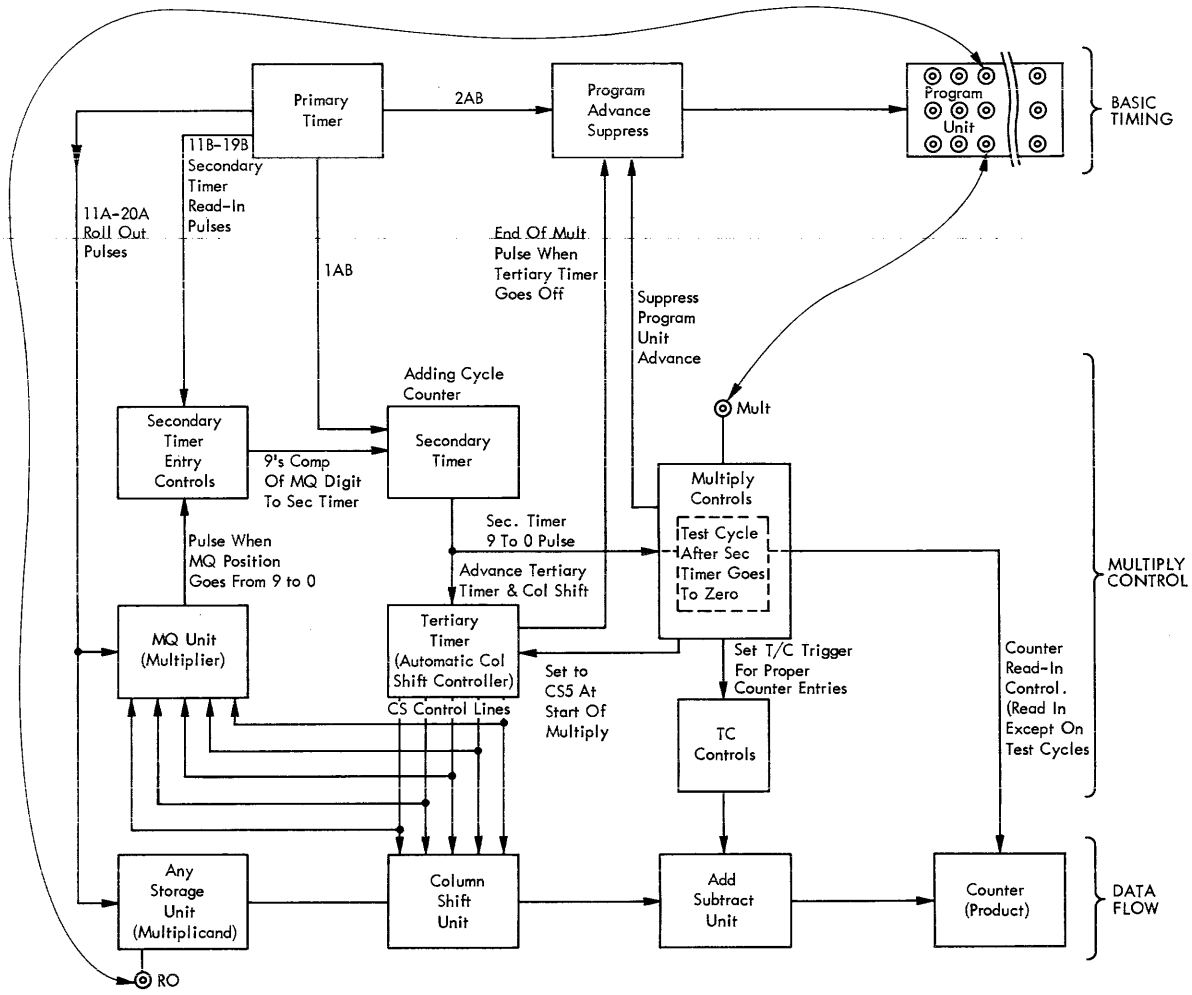

Figure 133. Logic Diagram of Multiplication Controls

advance by one each cycle after receiving the multiplier digit.

When the secondary timer goes from 9 to 0 at some 1AB time, an output pulse is fed to a control trigger which advances the tertiary timer one step to CS4. Then the preceding operations are repeated. The shifting continues until the tertiary timer moves out of the CS1 position. When the tertiary timer moves out of the CS1 position, it is a sign that multiplication is complete, and the end-of-multiplication pulse feeds to the multiply circuits and restores them, allowing the program unit to advance.

The general sequence of operations for multiplication is shown for a complete problem in Figure 132. Observe that one test cycle is taken for each position of the MQ Unit, during which the value of the multiplier digit is determined. If the digit is 0, the column shift changes at 1AB of the test cycle and another test cycle immediately follows. When a digit other than 0 is transferred to the secondary timer, a number of adding cycles equal to the value of the digit will follow the test cycle.

From the above description it is apparent that multiplication is nothing more than a series of automatically controlled transfers from a Storage Unit to the Counter.

Control Voltages for Multiplication

When multiplication is programmed, the PROGRAM EXIT hubs are wired to either MULTIPLY PLUS or MULTIPLY MINUS and to the READ-OUT hub of the Storage Unit containing the multiplicand. The multiplicand is rolled out of the Storage Unit every cycle during multiplication. However, no entry to the Counter is permitted during the test cycle so that a transfer of the multiplicand to the Counter occurs only during adding cycles of the multiplying process.

Wiring to either the MULIPLY PLUS or MULTIPLY MINUS hub produces several control voltages which make automatic multiplication possible. The circuits that produce these control voltages are shown on page 7-0101 for the H suffix and Figure 134 for the G suffix. The multiplying control circuit operations are identical for either multiply plus or minus. The only difference is in the setting of the TC trigger which controls the form of the entries to the Counter. Assuming positive factors only, a multiply plus operation requires that a *positive product* (complement entries) be developed while a multiply minus operation requires that a *negative product* (true entries) be developed.

In the H suffix machines the TC trigger is set to either the TRUE or the COMPLEMENT setting during each cycle of the multiplication. Since the TC trigger is reset OFF (to complement) at 3AB of each cycle it must therefore be turned on again each cycle if the multiplication requires true (minus) entries to the Counter.

With the G and earlier machines the TC trigger is set to the proper status during the first multiply cycle only and then not allowed to change. The TC trigger reset pulse at 1AB is blocked after the first multiply cycle (as are all other possible inputs). This leaves the TC trigger unaltered and in its correct setting.

The objectives of the multiplication control circuits are as follows:

A. Place the TC trigger under multiplication control.

B. Stop the Program Unit from advancing.

C. Condition the tertiary timer to go to CS5.

D. Place the MQ Unit under control of multiplication.

E. Condition the secondary timer circuits.

F. Allow tertiary timer to advance after multiplication by each MQ digit.

H SUFFIX CIRCUITS

OBJECTIVE A: TC trigger conditioned for multiplication control.

1. The "+(c) on mult + or mult –," through the DS-5 mixer at 5AT (page 7-0101), conditions PS-5 unit, 5B.

2. The mult trigger, 5C, turns on by a +4AB through the PS-5 unit, 5B.

3. The multiply trigger output is sent through CF units 5D and $5E_1$ to condition "+(c) on M or D" line.

4. Output to page 8-0102 makes DS5 unit $8AB_1$ apply positive input to IN unit $8B_1$. Minus output from $8B_1$ passes through CF-5 at $6C_2$ and DS-5 at $8CT_2$ to cut off PS-11 unit at 8D. 7AB storage to storage transfer pulse to TC is blocked.

OBJECTIVE: B: Suppress program advance.

5. Page 7-0101. Output from $5E_1$ also moves to left, around, and out to page 1-0201 where $2E_2$ half of inverter switch is made to conduct and block 2AB program advance pulses.

OBJECTIVE C: Turn on CS-5 tertiary timer trigger.

6. Page 7-0101. Output from $5E_1$ also conditions PS-11 at 5F. M-D trigger at 5G is turned on by 8AB pulse.

7. The positive output from the M-D trigger is inverted by $9E_2$ and sent to 6-0201 and 1-0101.

8. Page 6-0201. CS-5 trigger at 10K is flipped ON by input to pin 3.

OBJECTIVE: Program Testing Provisions.

9. Page 7-0101. The output from $9E_2$ to page 1-0101 turns on the program test trigger if the program test switch is ON. This allows one complete multiply operation for each depression of the PROGRAM ADVANCE switch.

OBJECTIVES D and E: MQ and secondary timer control.

10. Page 7-0101. The multiply trigger output from the CF-11 unit at 5D is a "+(c) on multiply" line. It conditions the following:

a) PS-6 at 10H to send (11A-20A) P to MQ Unit through 7-0201 on test cycles (only) during multiply.

b) PS-11 unit at 10B to send 1AB pulse to secondary timer.

c) PS-11 unit at 11A to send 23AB pulse to turn on test cycle trigger.

d) PS-11 unit at 11E to turn on secondary timer control trigger by an MQ carry pulse.

OBJECTIVE F: Tertiary timer advance.

11. (Page 7-0101.) The "+(c) on mpy" line (near PS-6 at 10H) to page 6-0201 condition PS-22 unit at 10G there to advance tertiary timer after secondary timer carry.

OBJECTIVE: Control of TC trigger in case of negative multiplier.

12. Page 7-0101. The "+(c) on mult" line which runs to page 8-0103 conditions a DS-3 unit there at 10GT ultimately permits an extra (7AB) pulse to the TC trigger each cycle in the case of a negative multiplier.

The sequence of operation and the circuit for multiply minus is the same as for multiply plus except for the operation of the TC trigger.

The "+(c) on mpy —" signal from the control panel hub, page 7-0101, is also fed through diode $8EB_1$, page 8-0102, to condition the PS-11 unit, 8G. During each multiply minus cycle this switch conducts at 5AB and flips the TC trigger to TRUE (it is reset to COMP at 3AB of each cycle).

G SUFFIX CIRCUITS (FIGURE 134)

OBJECTIVE A: Place the TC trigger under control of multiplication.

1. The minus program input shift to Mult Plus or Mult Minus through $1\text{-}6Z_2$ or $1\text{-}8W_2$ produces plus input to $1\text{-}6X_1$ or $1\text{-}6X_2$ (a mixer). Minus output from plate of 1-6X cuts off 1-7X, producing high level of "plus on multiply" line.

2. First Cycle Multiply Control trigger, 1-4X, comes on at 3A from output of 1-4Y.

3. First Cycle Multiply trigger, 1-6W, comes on at 3A from shift action when control trigger flipped. This trigger will stay ON until 11A of the first cycle to control proper initial multiply set-ups.

4. The Multply-Divide trigger, 1-7V comes on at 9A of first cycle from output of switch at 1-6V. Grid 3 is plus on first cycle from output of $1\text{-}4V_2$ under control of first cyc mult. trigger, 1-6W.

5. The turn-on of the Mult-Div trigger at 9A, through the minus full output of the power unit at 1-8V, blocks the normal 1AB restoring pulse to the TC trigger through 5-7J. (See Figure 124 for tie-in to TC circuits.)

6. The 7AB pulse applied to the TC trigger each cycle except when the Counter is being used must be blocked during multiply

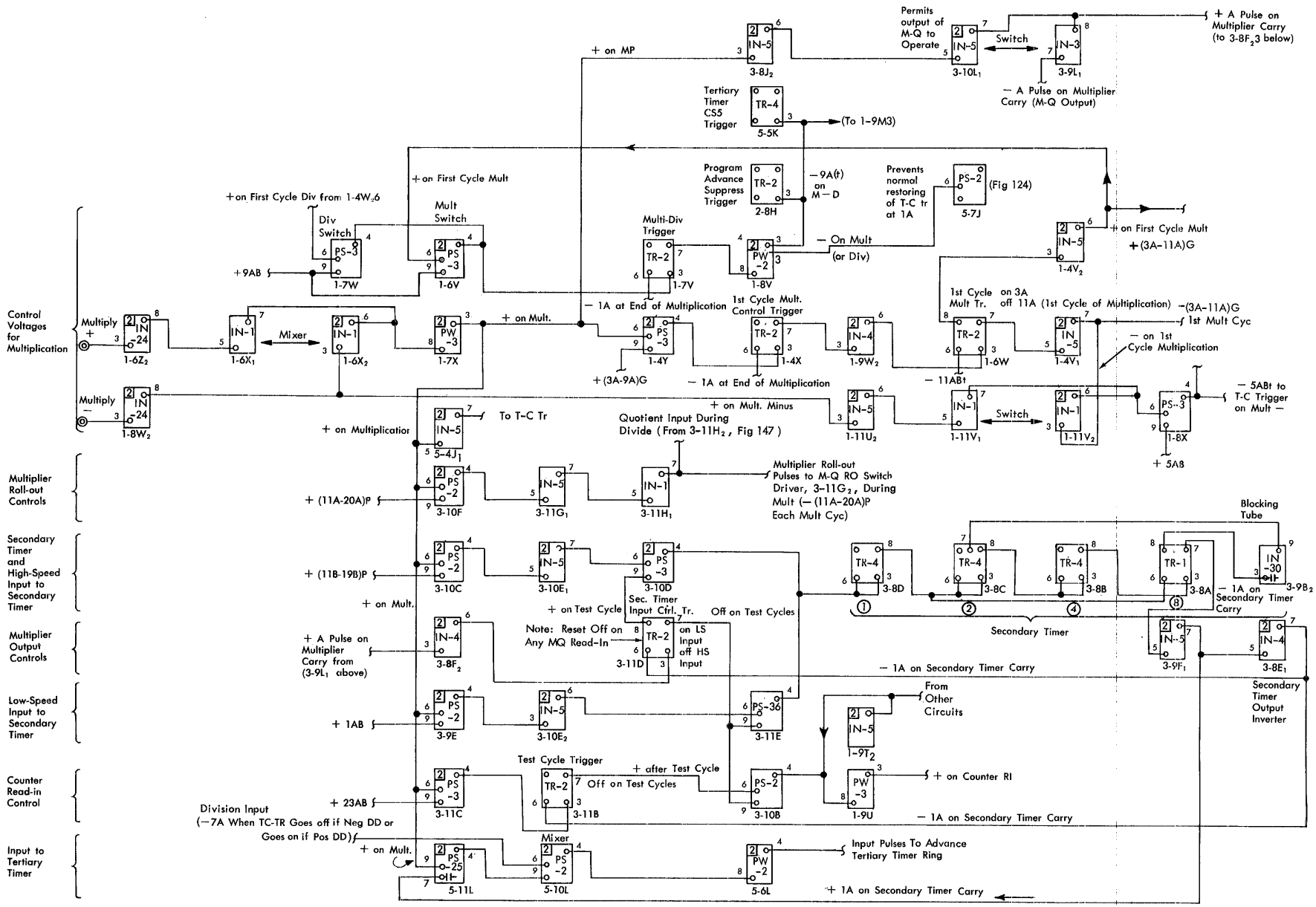

Figure 134. Multiplication Circuits (G Suffix)

even on test cycles (when the Counter is not actually in use). The "plus on multiplication" input to 5-4J_1 does this by making the tube conduct. (See unit at 5-5H, Figure 124, for tie-in to TC circuits.)

OBJECTIVE B: Suppress program advance.

7. The tapped output of 1-8V turns on the program advance suppress trigger, 2-8H, to keep machine in same program until multiplication is completed. (See Figure 95 for details of tie-in to Program Unit.)

OBJECTIVE C: Set tertiary timer to CS5.

8. The tapped output of 1-8V also turns on the CS5 TT trigger, 5-5K, to place machine in the proper column shift to start multiplication. (See Figure 115 for tie-in to column shift unit.)

OBJECTIVE D: MQ Unit control.

9. To transfer a digit from the MQ Unit to the secondary timer, the MQ must receive 11A-20A pulses. Switch unit at 3-10F supplies these pulses each multiply cycle under control of "plus on multiply" line. (MQ Unit position rolls each cycle, though data is only used on test cycles.)

OBJECTIVE E: Secondary Timer control.

10. The pulse when the MQ Unit goes from 9 to 0 must be able to control the test cycle 11B-19B input pulses to the secondary timer (a process similar to a normal storage to storage transfer through the Add-Subtract Unit). The 3-10L_1 portion of the MQ output switch (at the top of Figure 134) is cut off by "minus on multiply" output from 3-8J_2 so MQ 9 to 0 pulse can pass through 3-9L_1.

11. 3-10C supplies 11B-19B secondary timer read-in pulses during multiply.

12. 3-9E supplies the 1AB secondary timer advance pulse at the end of each primary timer cycle during multiply. (This 1AB pulse is frequently referred to as a "low speed" input because of its 20 microsecond width.)

13. 3-11C controls a 23AB pulse applied to turn on the test cycle trigger each multiply cycle. (The test cycle trigger is OFF for test cycle, ON during adding cycles.)

OBJECTIVE F: Tertiary Timer advance.

14. 5-11L activates circuits to advance the tertiary timer whenever the repetitive Counter entries for any particular multiplier digit are completed (as indicated by a secondary timer carry at 1AB).

On a multiply minus operation the same steps outlined above will occur but with one additional action: on the first multiply cycle a 5AB pulse is allowed to reach the TC trigger through the switch at 1-8X (Figure 134). Both halves of the inverter switch at 1-11V are cut off from 3A to 11A of the first cycle of a multiply minus only. The resulting plus 3A to 11A gate from the combined plates feeds to grid 3 of 1-8X and permits the tube to conduct when grid 1 goes plus at 5AB. The minus 5AB from the plate of 1-8X will turn ON (to TRUE) the TC trigger.

The case for a negative multiplier in the MQ Unit in volves a 7AB pulse to the TC trigger. This is covered below.

Sign Circuit Control of TC Trigger While Multiplying (G & H)

When multiplying, the MQ Unit must contain the multiplier. This figure may be either plus or minus. A Storage Unit must contain the multiplicand. This figure may also be either plus or minus. Furthermore, as discussed earlier, the control panel permits a multiply plus or minus operation to be called for (to facilitate algebraic computations). These sign items must all be considered to insure the proper type of entries to the Counter. A minus multiplier in the MQ Unit causes a 7AB pulse to reach the TC trigger. A minus multipli-

OPERATION				T.C. HISTORY			
Mult Type	MQ	Store	Ctr	Start	After 5AB	After 7AB	After 9AB (Final)
1. MULT. +	(+A) X	(+B)	= +P	OFF	OFF	OFF	OFF (comp)
2. MULT. +	(+A) X	(−B)	= −P	OFF	OFF	OFF	ON (true)
3. MULT. +	(−A) X	(+B)	= −P	OFF	OFF	ON	ON (true)
4. MULT. +	(−A) X	(−B)	= +P	OFF	OFF	ON	OFF (comp)
5. MULT. −	(+A) X	(+B)	= −P	OFF	ON	ON	ON (true)
6. MULT. −	(+A) X	(−B)	= +P	OFF	ON	ON	OFF (comp)
7. MULT. −	(−A) X	(+B)	= +P	OFF	ON	OFF	OFF (comp)
8. MULT. −	(−A) X	(−B)	= −P	OFF	ON	OFF	ON (true)

Note: H suffix TC trigger set up each cycle.
G suffix and earlier TC trigger set up on first cycle only and then held in that status.

Figure 135. Multiplication Possibilities and TC Triggering

cand in the Storage Unit causes a 9AB sign channel pulse to reach the TC trigger. A minus multiplication operation programming causes a 5AB pulse to reach the TC trigger. The chart of Figure 135 shows these combinations and the triggering history of the TC trigger.

Of the eight possible combinations, four produce a positive product while the other four produce a negative product. The overall steps of the multiplication are the same for any combination. Only the TC status and the type of the entries to the Counter vary. The sign of the product developed in multiplying depends entirely on the status of the TC trigger. Therefore the sign control for multiplying entails controlling TC trigger entries.

H SUFFIX CIRCUITS

Multiply Plus

OBJECTIVE: (Pages 8-0103 and 8-0102.) To impulse the TC trigger when the multiplier is negative and multiply plus is programmed.

1. MQ sign trigger output conditions DS-3 unit at 10GT (AND switch).

2. "(+) on mply" from 7-0101 through DS unit sends "(+) on neg mpl" output through CF-10 unit 11F2 to 8-0102.

3. DS-5 unit 8CT (8-0102) conducts to condition PS-11 unit, 8D.

4. PS-11 unit, 8D, conducts each cycle of multiplication at 7AB time to turn on TC trigger.

5. The TC trigger is reset OFF, with a 3AB pulse, each cycle of multiplication through PS-27 unit 9H.

When the multiplicand is negative, the TC trigger also receives a 9AB pulse through the PS-11 unit at 7J. The sign exit channel is high, making pin 4 of 7HT plus. Pin 6 of 7HT is plus during multiply. Pin 7 therefore goes plus and conditions pin 7 of 7J plus.

Multiply Minus

OBJECTIVE: (Page 8-0102.) To control the TC trigger when the multiplicand is negative.

1. One-half of the DS-3 unit, 7HT conditioned by a negative sign read-out signal.

2. The other half of DS3 unit is conditioned by a plus on multiply signal.

3. PS-11 unit, 7J, is conditioned to conduct a 9AB pulse on multiplication when the multiplicand is negative.

4. PS-11 output flips the TC trigger at 9AB time.

Thus the status of the TC trigger is changed at 7AB time if the multiplier (MQ) is negative and again at 9AB if the multiplicand is negative.

If multiply minus is programmed, the TC trigger receives a 5AB pulse as previously explained in "Control Voltages for Multiplication."

The multiply sign control circuits are only part of the controls operating on the TC trigger. Page 8-0102 should be reviewed to see how the multiply sign controls tie-in with the other TC trigger controls.

G SUFFIX CIRCUITS

OBJECTIVES: To set the TC trigger to the status as indicated in the chart of Figure 135. The TC trigger for the G and earlier machines is set during the first multiply cycle and does not change until multiplication is completed. Controlling units are in the Multiplication Controls area of Figure 124.

1. The 5AB pulse for any multiply minus instruction passes through the PS unit at 1-8X on the first multiply cycle only. Grid 3 control is from 1-11V of Figure 134.

2. The 7AB pulse for a negative multiplier in the MQ Unit passes through the PS unit at 5-10G on the first multiply cycle only. Control of grid 3 of this unit is by inverter switch 5-8$G_{1 \text{ and } 2}$ on Figure 136. If the MQ sign storage trigger is ON (minus indication), 5-8G_2 is cut off. 5-8G_1 is cut off from 3A to 11A of the first multiply cycle by the output of1-4V_1, Figure 134.

3. The 9AB pulse for a negative multiplicand being rolled from a Storage Unit passes through 3-10K on the first cycle of multiply only. Grid 3 of 3-10K is plus from 3A to 11A of the first cycle from 1-4V_2, Figure 134. Grid 1 of 3-10K is connected to the sign entry channel (Figure 111) which has a 9AB pulse on negative sign RO.

4. These pulses can be applied to the TC trigger in any combination as indicated by Figure 135.

MQ Unit

The MQ Unit, page 5-0101 (H) and Figure 137 (G), must contain the multiplier factor because it is equipped with the special circuits necessary to transfer the multiplier digits one at a time to the secondary timer. The MQ Unit is a 5-position storage unit arranged for punch read-in, electronic read-in, electronic read-out, quotient development, and for handling the multiplier factor during multiplication. The special circuits in the MQ Unit to perform the multiplication and division operations permit one digital column at a time to be rolled out under control of the column shift unit. Each position has a separate "Multiplier roll-out-quotient read-in switch."

H SUFFIX CIRCUITS (PAGE 5-0101)

In the 604H a triode switch is used for each of the five digital storage positions. These are located from 5-4C_1 to 5-4E_2. The grids are conditioned by a +(s) voltage under control of the tertiary timer and from the column shift unit, page 6-0101. The cathodes are fed negative pulses from the circuit on page 7-0201. All of the cathodes of the triode switches are commoned; only one switch, however, can conduct at a time because of the grid voltage from the column shift unit. The negative pulses to the cathodes of the triode switches cause one switch to conduct and the negative pulses at the output advance that position of the MQ Unit.

The — (11A-20A) P on multiply test cycles from page 7-0201 advances one position of the MQ Unit ten times. That position of the MQ Unit advances

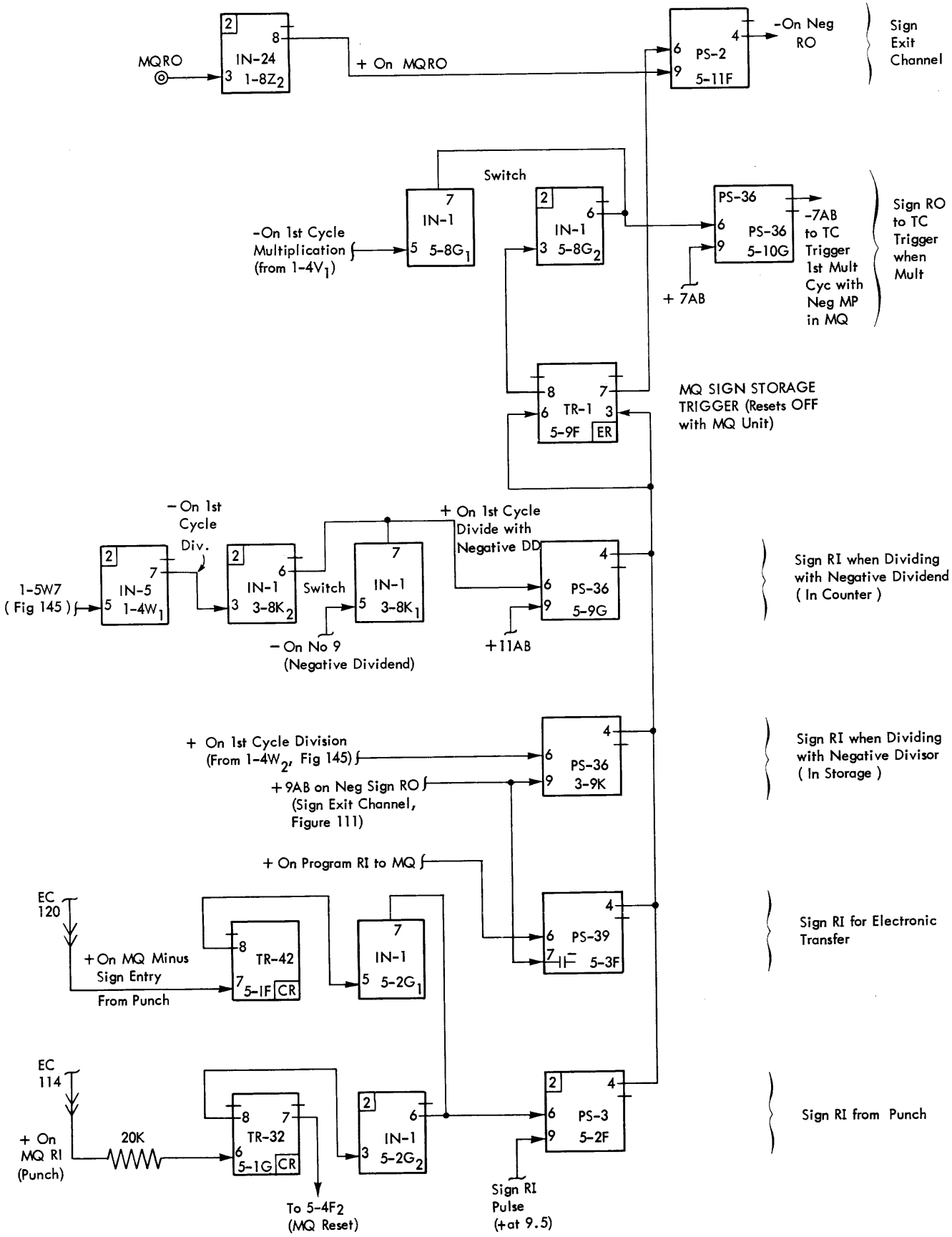

Figure 136. MQ Sign Trigger Control (G Suffix)

through 0 and returns to its original value. When the position of the MQ Unit goes from 9 to 0, the output is fed to two cathode-follower units. The output of the MQ position through the CF-1 unit to the exit channel has no effect during multiply test cycles because no Storage Unit or Counter is conditioned to read in.

The CF-1 unit in parallel with the MQ exit channel cathode follower also conducts when the MQ position goes from 9 to 0, and the output of this CF-1 unit is fed to the secondary timer, page 7-0101. Thus if a 2 is in the high order of the MQ Unit, $11A_2$ conducts at 18A time and signals an MQ carry. The MQ carry pulse is used to control the secondary timer input.

G SUFFIX CIRCUITS (FIGURE 137)

In the G suffix and earlier machines a separate pentagrid switch is used for each of the five digital positions in the MQ Unit. These are located from 5-4A through

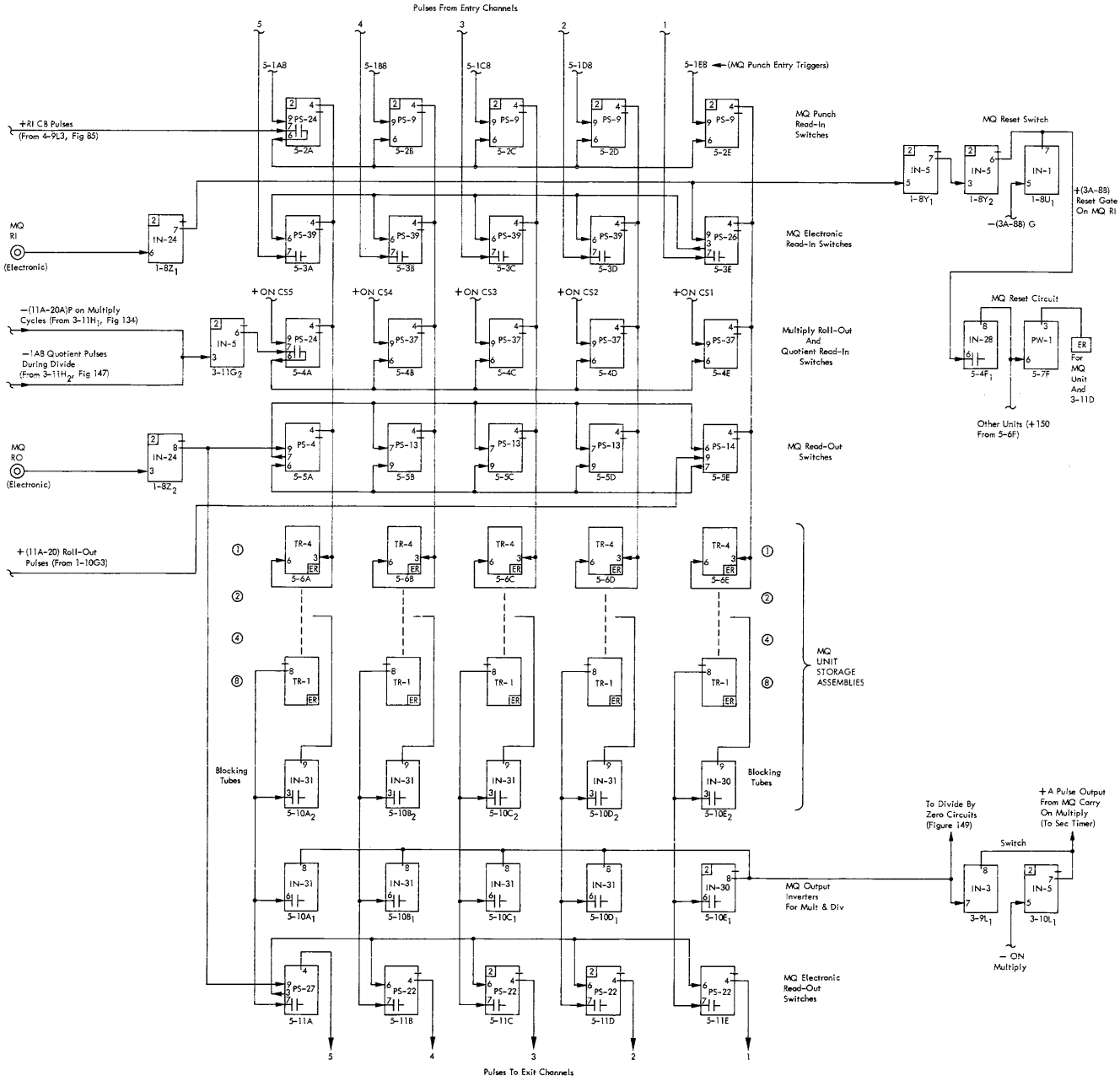

Figure 137. The MQ Unit (G Suffix)

5-4E, Figure 137. Grid 1 of these switches receives plus 11A-20A pulses during each multiply cycle from 3-11G_2 (Figure 134). Each of the number 3 grids is controlled by a separate "plus on CS" line which permits only one of the switches to pass minus 11A-20A pulses to its storage assembly triggers. The particular MQ position will advance by ten pulses and return to its original digit. When the position goes from 9 to 0, a plus shift from the left plate of the value 8 trigger is fed to the corresponding MQ output inverter, 5-10A_1 through 5-10E_1. These five unit sections make up a five input mixer circuit. The capacitive input for each inverter converts any 9 to 0 positional shift into a pulse which in turn controls the secondary timer input.

The electronic read-out switches, 5-11A through 5-11E, also receive any 9 to 0 shifts from the MQ Unit storage assembly positions. These switches are not primed to pass pulses during a multiply operation, however, and they therefore isolate the exit channels from the MQ Unit activity.

The CS Unit shifts to CS5 on the first multiply cycle. If a 2 is in the high order of the MQ Unit, the 18A input pulse will roll the position from 9 to 0 and send a pulse to the secondary timer input control circuits at about 18A time (there is a slight delay due to triggering actions).

MQ Sign Control

The MQ Unit is used as a 5-position storage unit during transfer programs and the MQ sign trigger must operate as any other storage unit sign trigger. During division the MQ sign trigger may have to be impulsed and flipped more than once to cause a proper final setting; therefore a binary connected trigger must be used. The controlling circuit is shown on page 8-0103 for the H suffix and on Figure 136 for the G suffix. The sign trigger is reset OFF (from 3A to 8B) whenever the MQ Unit is reset. The turn-on flipping of the trigger is similar to other storage units except for the two-flip possibility during divide. An extra circuit has also been included to permit MQ Unit sign sensing at 7AB as required by the multiplication operation. The normal 9AB storage to storage transfer sign control provision is also included for use when needed.

Secondary Timer Control (G & H)

The secondary timer consists of one position of a modified binary storage assembly of the same type used in the Storage Units. The secondary timer resets to zero and returns to zero when ten pulses are fed to it; the general operation is the same as described in the section devoted to electronic transfer (preceding chapter).

The secondary timer provides a maximum of ten cycles for multiplication by each digit. The first cycle is always a test cycle to determine the value of the multiplier digit. An 0 in the MQ Unit requires only one electronic (test) cycle, while a 9 in the MQ Unit requires the maximum ten cycles, one for the test cycle and nine for transferring the multiplicand to the counter.

During the test cycle, the roll-out pulses + (11A-20A) are fed to the multiplier switch for the MQ position corresponding to the CS unit position, page 5-0101 (H) and Figure 137 (G). These pulses roll the corresponding MQ position and return it to its original value, producing an output pulse from the CF unit at some point between 11A and 20A. Thus, for a 2 in the MQ position being rolled, the output pulse will be at 18A. Feeding the Secondary Timer is a unit similar to a single position Add-Subtract Unit position. The secondary timer control trigger and the switch it controls convert a time differing A pulse into a particular number of B pulses. The number of B pulses corresponds to the 9's complement value of the digit being rolled out of the MQ Unit position. The operation is much the same as a complement transfer from a Storage Unit position to the Counter.

H Suffix Description (Page 7-0101)

The secondary timer control trigger, 3-11D, is electronically reset to its off position from the MQ Unit reset circuit and is off at the start of a multiplication. Therefore, the pulse from the MQ Unit turns this trigger on.

The PS-11 unit at 11E (Page 7-0101) permits the MQ carry pulse to reach the secondary timer control trigger during multiplication.

As long as the secondary timer control trigger is off, the PS-1 unit at 10A is conditioned to pass the 11B-19B pulses. Thus, a 2 in the multiplier causes the control trigger to go on at 18A after seven B pulses, 11B through 17B, have passed through the switch and fed to the secondary timer. The secondary timer will be advanced to 7, the 9's complement of the 2.

The PS-11 unit, 10B, feeds a 1AB pulse to the secondary timer each cycle of multiply. At the end of any test cycle the secondary timer therefore contains the tens complement of the MQ position that was

tested. The secondary timer control trigger remains ON until the secondary timer goes from 9 to 0. When the timer advances from 9 to 0, the multiplication is completed for that one digit. The tertiary timer is then advanced by the plus shift from the left side of the secondary timer control trigger when it turns off. The above operations are then repeated in the next shift position.

H SUFFIX CIRCUIT FOR MULTIPLICATION

OBJECTIVE: (Page 7-0101 and Figure 132.) Multiply 12 × 144. The MQ Unit contains the multiplier (12). Any storage unit can contain the multiplicand; this illustration uses GS4. The product is developed in the Counter. Multiply + and GS4 RO are wired from separate hubs of the same program step.

1. Control voltages for multiplication have been previously described and are not repeated here.
2. Page 7-0101. The +(c) (11A-20A) P from circuit on page 1-0501 pass through 11G when the test cycle trigger is OFF and are sent through page 7-0201 to MQ Unit, page 5-0101.
3. Fifth position of MQ Unit goes from 9 to 0 at 20A and turns on secondary timer control trigger.
4. All + (11B-19B) P feed into the secondary timer.
5. Test cycle trigger turns on at 23AB.
6. Secondary timer goes from 9 to 0 at 1AB time.
7. Secondary timer output turns off secondary timer control trigger and test cycle trigger.
8. Secondary timer control trigger, turning off, advances tertiary timer to next column shift (CS4), page 6-0201.
9. First cycle of multiply is completed. Cycles 2 and 3 are identical sequences because multiplier in three high-order positions of MQ Unit is 0.
10. Fourth cycle; test MQ Unit in CS2.
11. Same as step 2.
12. Second position of MQ Unit goes from 9 to 0 at 19A time and turns on secondary timer control trigger.
13. PS-1 unit, 10A, cannot conduct any + (11B-19B) P when secondary timer control trigger is ON.
14. Eight pulses (11B through 18B) were fed through PS-1 unit to secondary timer.
15. Test cycle trigger turns on at 23AB.
16. Counter R1 voltage to circuit on page 8-0203 when test cycle trigger and secondary timer control trigger are ON.
17. Secondary timer advances from 8 to 9 at 1AB.
18. End of fourth cycle; test cycle in CS2.
19. RO of GS4 read in to Counter in CS2.
20. 1AB advances secondary timer from 9 to 0.
21. Secondary timer output turns off secondary timer control trigger and test cycle trigger.
22. Secondary timer control trigger, turning off, advances tertiary timer to next CS (CS1), page 6-0201.
23. During the fifth cycle the GS4 Unit read into the Counter in CS2.
24. The sixth cycle will be a test cycle because of actions in step 21.
25. Units position of MQ Unit receives (11A-20A) P as in step 2 above.
26. Units position of MQ Unit goes from 9 to 0 at 18A time and turns on secondary timer control trigger.
27. PS-1 Unit, 10A, cannot conduct any + (11B-19B) P when secondary timer control trigger is ON.
28. Seven pulses (11B through 17B) were fed through PS-1 unit to secondary timer.
29. Test cycle trigger turns on at 23AB time.
30. Counter RI voltage to page 8-0203 when test cycle trigger and secondary timer control trigger are ON.
31. Secondary timer advances from 7 to 8 at 1AB of this 6th cycle.
32. The 6th cycle was a test cycle which left machine prepared for an adding cycle to follow.
33. RO GS4, read in to Counter in CS1.
34. Secondary timer advances from 8 to 9 at 1AB time.
35. Since the secondary timer did not go from 9 to 0 at the end of the 7th cycle, the machine is left in adding cycle condition for 8th cycle.
36. RO GS4; RI Counter in CS1.
37. Secondary timer advances from 9 to 0 at 1AB time.
38. Secondary timer output turns off secondary timer control trigger and test cycle trigger.
39. Secondary timer control trigger, turning off, sends a signal to tertiary timer, page 6-0201.
40. Page 6-0201. CS1 trigger (6K) of tertiary timer, turning off by the signal from step 39 above, feeds a "—(t) at the end M-D" through page 7-0201 to page 7-0101.
41. Page 7-0101; the "— at end of M-D" signal turns off M-D trigger and multiply trigger; thus restoring all circuits to their original status and ending multiply operation.

G Suffix Description (Figure 134)

The secondary timer input control trigger, 3-11D, is electronically reset OFF from the MQ reset circuit on any MQ read-in. It is therefore OFF at the start of any multiplication. Grid 1 of the input control switch, 3-10D, is thus conditioned positive. Grid 3 of the switch receives plus 11B-19B pulses only during multiplication under control of the switch at 3-10C. The turn-on pulse to the right grid of the secondary timer input control trigger, 3-11D, occurs when the rolling position of the MQ Unit goes from 9 to 0. This turn-on pulse comes from the "five input mixer" MQ output inverters, 5-10A_1 through 5-10E_1, Figure 137. The inverter switch, 3-10L_1 with 3-9L_1, is conditioned to pass MQ pulses only during multiply.

The 9 to 0 MQ pulse will reach the secondary timer input control trigger, 3-11D, at some 11A through 20A time and turn the trigger on. Until that time the 11B-19B pulses are able to pass through the 3-10D switch and advance the secondary timer. 3-11D will stay ON and block further 11B-19B pulses until a secondary timer carry occurs.

At 1AB of each multiply cycle the secondary timer test pulse advances the secondary timer by one. When the timer advances from 9 to 0, the multiplication is completed for that one digit. The secondary timer 9 to 0 shift: 1) advances the tertiary timer ring (Figure 138) to prepare for the multiplication by a new multiplier digit, 2) turns off the test cycle trigger (3-11B, Figure 134) to kill Counter entries during the test cycle, and 3) turns off the secondary timer input control trigger, 3-11D, to prepare the control switch, 3-10D, to pass secondary timer roll-in B pulses for the new digit. The operations above are then repeated for the new digit.

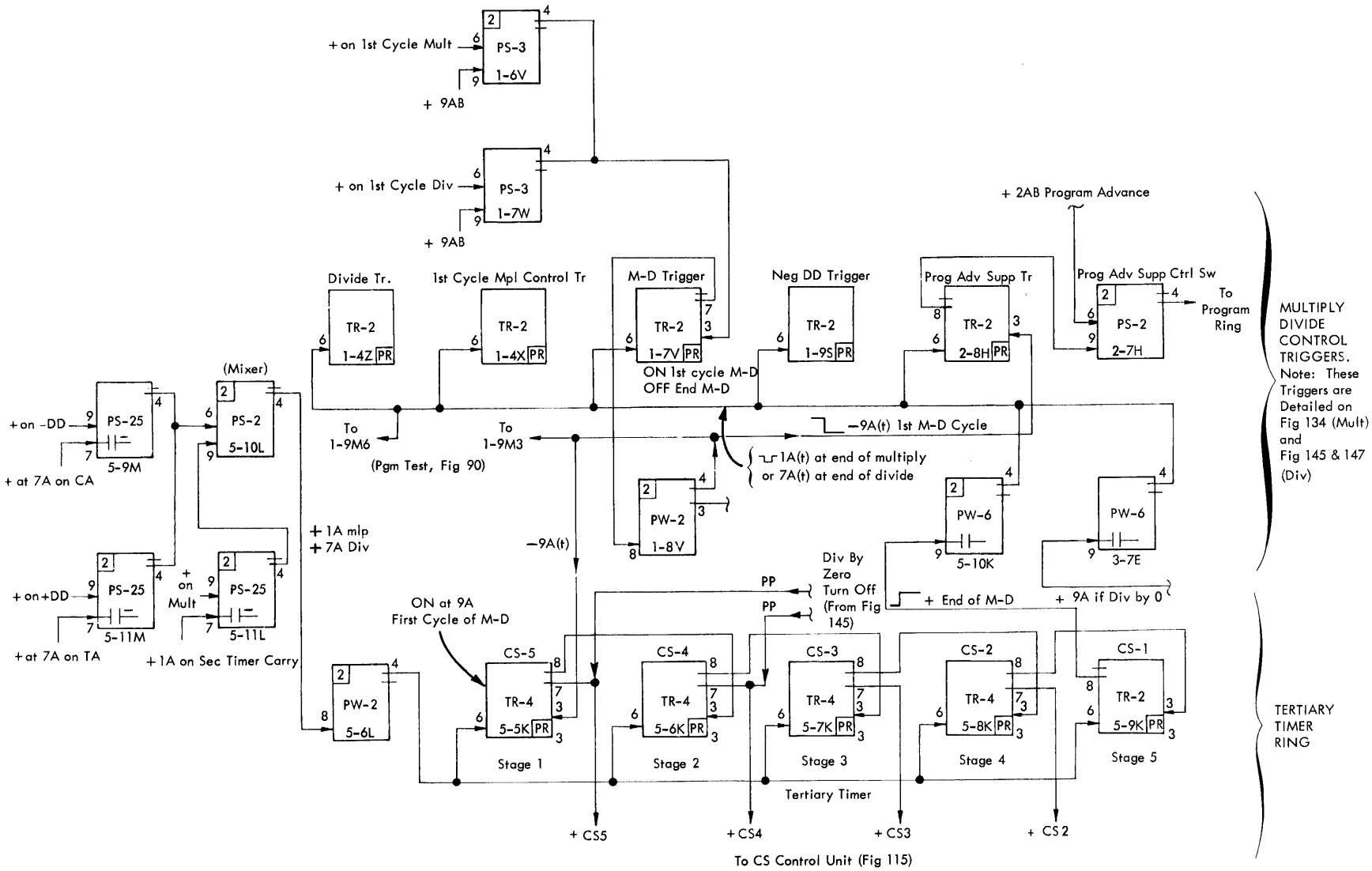

Figure 138. Tertiary Timer and Controls (G Suffix)

G SUFFIX CIRCUITS FOR MULTIPLICATION

OBJECTIVE: (Figures 134 and 132.) Multiply 12 × 144. The MQ Unit contains the multiplier (12). Any Storage Unit can contain the multiplicand; this illustration uses GS4. The product is developed in the Counter. Multiply plus and GS4 RO are wired from separate hubs of the same program step.

1. The control voltages are set up as described earlier.

2. The 11A-20A roll-out pulses are applied to the MQ Unit from 3-11G_2.

3. Fifth position of the MQ Unit receives the roll-out pulses. Since this position contains a zero it goes from 9 to 0 at 20A and turns on the secondary timer input control trigger, 3-11D.

4. All nine 11B-19B pulses reached the secondary timer, advancing it to 9.

5. Test cycle trigger, 3-11B, turns on at 23AB.

6. Secondary timer receives 1AB pulse through 3-11E and goes from 9 to 0.

7. Secondary timer output at 1AB through 3-8E_1 turns off secondary timer input control trigger, 3-11D, and the test cycle trigger, 3-11B.

8. The tertiary timer ring, Figure 138, is also advanced to the next column shift (CS4) at 1AB by the secondary timer output from 3-9F_1.

9. The first cycle of multiply is completed. It was a test cycle. Cycles 2 and 3 are identical sequences because the three high order multiplier digit in the MQ Unit are zeros.

10. Fourth cycle is a test cycle in CS2. MQ Unit contains a 1 in this position.

11. MQ Unit second order position receives 11A through 20A roll-out pulses as in step 2, above.

12. Second position of MQ Unit goes from 9 to 0 at 19A time. Output pulse turns on secondary timer input control trigger, 3-11D.

13. Input control switch, 3-10D, stops passing B pulses to secondary timer when 3-11D turns on at 19A. The 19B pulse thus does not reach the secondary timer.

14. The eight B pulses from 11B through 18B did reach the secondary timer and advanced it to 8.

15. Test cycle trigger, 3-11B, turns on at 23AB.

16. With both the test cycle trigger and the secondary timer input control trigger ON, the switch at 3-10B conducts and makes the "plus on Counter RI line" go high. This conditions Counter read-in switches (Figure 120) to pass entry channel information.

17. 1AB pulse advances secondary timer from 8 to 9.

18. This completes the fourth cycle which was a test cycle in CS2.

19. During the fifth multiply cycle the roll-out of GS4 is accepted by and entered into the Counter.

20. At 1AB, the end of the 5th cycle, the secondary timer advances from 9 to 0.

21. Secondary timer 9 to 0 output shift from 3-8E_1 turns off secondary timer input control trigger and test cycle trigger to prepare for a test cycle next cycle.

22. Secondary timer 9 to 0 shift from 3-9F_1 advances tertiary timer ring to next (CS1) position, Figure 138. Note that tertiary timer CS1 trigger does not supply any conditioning voltage to the CS control unit. The CS unit will be in CS1 unless controlled otherwise. The Ter Time CS1 trigger is used only to provide a multiply end signal at the proper time.

23. Summarizing the fifth cycle, the multiplicand from GS4 read into the Counter in CS2, the secondary timer went from 9 to 0 at 1AB, and the circuits were prepared for the test cycle to follow by the actions in step 21 above.

24. The units position of the MQ Unit receives the 11A-20A roll-out pulses as in step 2 above.

25. The units position of the MQ Unit contains a 2 in this example and goes from 9 to 0 at 18A time.

26. Secondary timer input control trigger comes on at 18A time and kills the input control switch, 3-10D.

27. The 18B and 19B pulses are prevented from reaching the secondary timer.

28. The 11B through 17B pulses did reach the secondary timer and advanced it to 7.

29. Test cycle trigger turns on at 23AB time.

30. With the secondary timer input control trigger and the test cycle trigger both ON, the "plus on Counter read-in" line supplies an up level to the Counter read-in switches, Figure 120.

31. At the end of this sixth cycle a 1AB pulse advances the secondary timer from 7 to 8.

32. The sixth cycle was thus a test cycle which left the machine prepared for an adding cycle to follow.

33. The multiplicand in GS4 is read into the Counter in CS1 during the seventh cycle.

34. The secondary timer advances from 8 to 9 at 1AB time.

35. Since the secondary timer did not go from 9 to 0 at the end of the seventh cycle, the machine is left in the adding cycle condition for the eighth cycle.

36. The multiplicand in GS4 is read into the Counter again in CS1 during the eighth cycle.

37. The secondary timer goes from 9 to 0 at 1AB time of the eighth cycle.

38. Secondary timer output shift at 1AB through 3-8E_1 turns off the secondary timer input control trigger and the test cycle trigger.

39. The secondary timer output shift through 3-9F_1 at 1A time is sent to the tertiary timer ring, Figure 138. (Input capacitor in 5-11L converts shift to pulse.)

40. The 1A time pulse turns off of the CS1 tertiary timer trigger, 5-9K (Figure 138), sending a plus shift to the capacitor input power unit at 5-10K.

41. The minus, tapped level output pulse from 5-10K signals the end of multiply and turns off the first cycle multiply control trigger, 1-4X; the multiply-divide trigger, 1-7V; and the program advance suppress trigger, 2-8H. This restores all circuits to their original status and ends the multiply operation. These triggers are drawn in Figures 138 and 134 and should be observed on both illustrations at this time.

42. Note in Figure 134 that the secondary timer was left in the zero status; the test cycle trigger, 3-11B, was left OFF; and the secondary timer input control trigger, 3-11D, was also left OFF. These are the necessary starting conditions for any possible following multiplication programs.

F SUFFIX NOTES

F and earlier suffix machine operations during multiply is basically the same as for the G suffix, but there are a few items which are different and which cause different neon bulb indications during analysis. These differences have been indicated on the multiply circuits of Figure 139.

1. The switch unit at 5-4H is in the TC control circuits and blocks pulses thought to be possible to the TC trigger during multiply or divide. When the multiply-divide trigger is ON, the PS unit at 5-4H is cut off. In some of the earlier suffix machines the line running in Figure 124 from pin 9 of 5-3H_2 to pin 7 of 5-4J_1 runs instead to the grid 3 input of 5-4H. The lead connecting the plates of 5-3H_2 and 5-4J_1 is not present. On these earlier suffixes, with 5-4H cut off during multiply and divide, a plus output from the plate of 5-4H caused 5-4J_1 to conduct and in turn cut off 5-5H. The 7AB pulse attempting to pass through 5-5H was thus blocked during multiply and divide operations. The simplier circuit used on later machines, and as drawn in Figure 124, produces equally correct results and eliminates the need for 5-4H. (The action supplied by 5-4H on these earlier suffixes for blocking the 7AB pulse

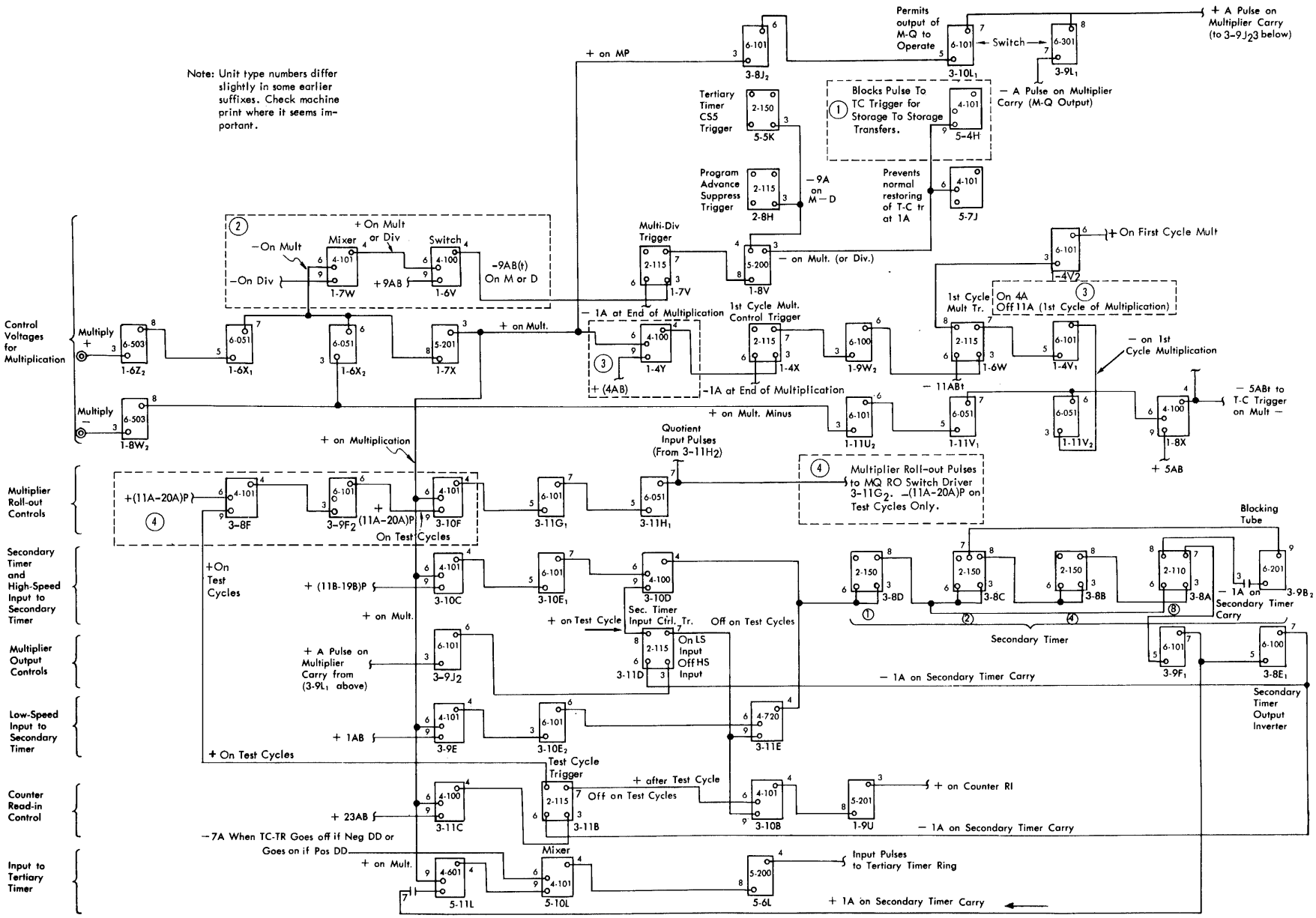

Figure 139. Multiplication Circuits (F Suffix)

through 5-5H during division as well as multiplication, are not needed. The Counter reads in each cycle during divide and conduction through 5-3H_1, Figure 124, therefore keeps 5-5H cut off, blocking the 7AB storage to storage transfer pulse. During multiplication test cycles, when the Counter is not being used for read-in, the simple triode at 5-4J_1 continues to conduct in the later suffixes and keeps 5-5H cut off.)

2. The circuit for 1-7W and 1-6V (Figure 139) which control the multiply-divide trigger turn-on is different as indicated. On machines earlier than the F suffix, pulse times other than 9AB (such as 6AB) have been used to feed grid 1 of 1-6V. The machine print should be checked for the earlier machines.

3. The pulse to grid 1 of 1-4Y is at 4AB on F and earlier machines rather than the 3A-8B gate used in the G suffix. As a result, the first cycle of multiply trigger, 1-6W, comes on at 4A rather than 3A.

4. The circuit controlling grid 1 of 3-10F prevents the MQ Unit position being rolled out from being rolled around except on test cycles. The tubes at 3-8F and 3-9F_2 were eliminated in the G suffix because it was found that 9 to 0 pulses from a rolling MQ position during adding cycles could do no more than try to turn on 3-11D, which was already ON from the test cycle. In the F suffix and earlier machines, then, the MQ position will only be seen to roll during test cycles. This is similar to the H suffix operation where the elimination of MQ Unit exit channel isolation switches made it necessary to prevent MQ roll around on adding cycles. Any 9 to 0 shifts in the H suffix MQ Unit during adding cycles would cause erratic entries to the Counter.

Summary of Multiplication (All Suffixes)

1. Multiplication causes a starting shift to CS5.
2. The first cycle of each column shift is a test cycle.
3. At 1AB (the end of the test cycle) the secondary timer is tested for a 9 to 0 shift.
4. If the secondary timer does not go from 9 to 0, the next cycle will be a read-in to the Counter (adding cycle).
5. A 1AB pulse is added to the secondary timer at the end of each Counter read-in (adding) cycle also.
6. When the secondary timer goes from 9 to 0, a column shift results.
7. The above sequence repeats until the tertiary timer CS1 trigger goes off to signal the end of multiply.

DIVISION

DIVISION, like multiplication, consists of a series of automatically controlled entries into the Counter from a Storage Unit. Division, also like multiplication, requires a number of Primary Timer cycles with program advancing suppressed. With 604 division, the dividend is first loaded into the Counter from an earlier program step. Then, during the division program, the machine finds out how many times the divisor in a Storage Unit can be "subtracted" from the Counter before the Counter changes its sign. The answer is developed in the MQ Unit one pulse per cycle and is equal to the number of successful (non-sign changing) "subtraction" cycles that were taken. For example, 2 can be subtracted from 8 four times, which is the same answer obtained by more conventionally dividing 8 by 2. Control panel wiring for division consists of two wires from separate hubs of the same program step. One wire runs to the DIVIDE hub and the other to the READ OUT hub of the Storage Unit holding the divisor.

When the 604 starts its "division by subtraction," it doesn't know when to stop until it has gone too far, overdrawn, and actually changed the sign of the Counter. To correct for its having gone too far, the machine takes an extra correction cycle after each overdraw. This correction cycle adds back the overdrawn amount and returns the Counter to the balance it held just before the overdraw cycle. There are, therefore, three types of division cycles: 1) REDUCTION CYCLES where an entry made to the Counter does not change the Counter sign. A pulse is entered into the MQ Unit at the very end of each reduction cycle only. 2) OVERDRAW CYCLES where the entry to the Counter does change the sign. 3) CORRECTION CYCLES where an entry is made back into the Counter to overcome the effects of the overdraw.

Division always starts in CS5 under control of the tertiary timer. After every correction cycle the tertiary timer shifts to its next lower position, and the reduction process is started on the lower order digits of the dividend amount still remaining in the Counter. The process continues until the tertiary timer steps out of the CS1 position. The "pulse each reduction cycle" entries into the MQ Unit go into the MQ position which is also dictated by the column shift setting of the particular cycle.

Figure 140 gives a cycle by cycle examination of a division problem and indicates the actions involved.

The divisor (abbreviated DS) can be up to 8 digits in size and is held in any Storage Unit or pair of coupled

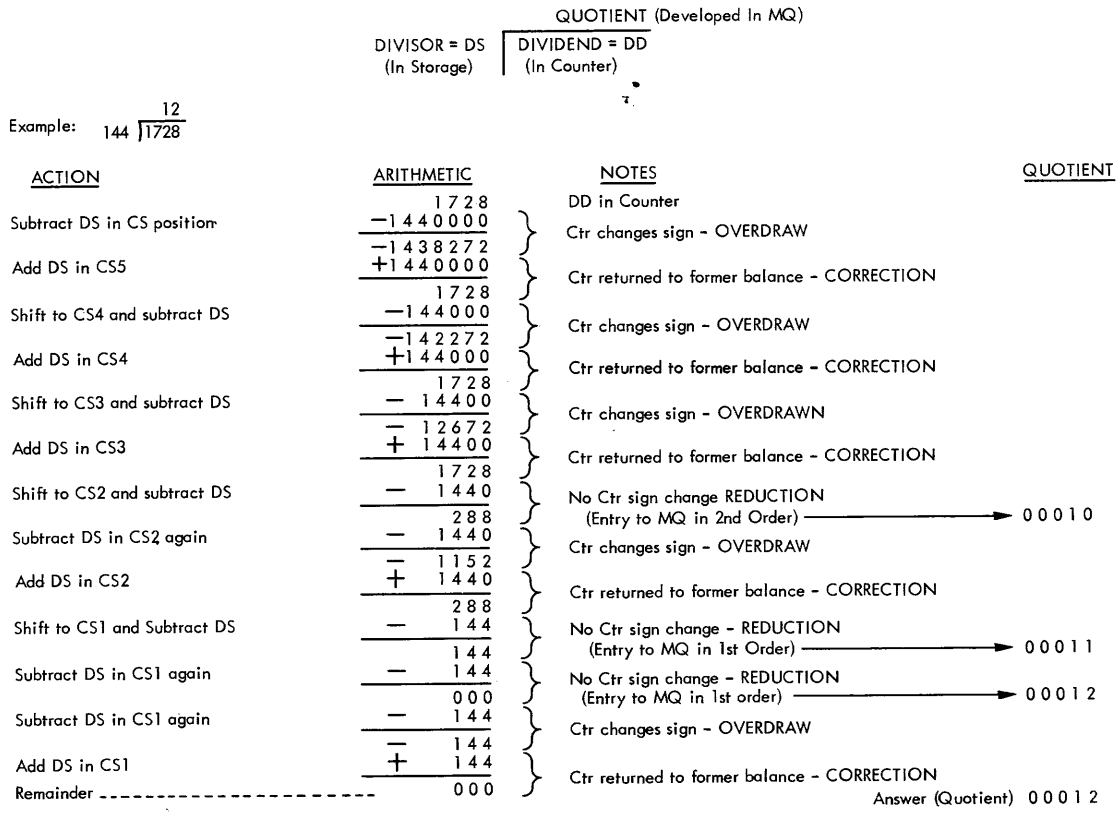

Note: If figures used should not divide evenly, any remainder will be left in the Counter for use as desired.

This illustration is to show step by step principles only and does not consider the fact that a plus figure in the 604 Counter is actually in complement form.

Figure 140. Principles of 604 Division by Repeated Subtractions

Units. The dividend (abbreviated DD) must be in the Counter and can be up to twelve digits long. The twelve digit dividend limitation (rather than the full 13 digit Counter capacity) results because the quotient, which is developed in the MQ Unit, must be limited to 5 digits. Dividing a 13 digit figure by an 8 digit figure would give a six digit answer. Whatever their individual lengths, the combination of divisor and dividend figures must not tend to produce any quotient answer larger than 5 digits or the machine will activate special "division by zero" circuits and reject the calculation. Quotients larger than 5 digits long can be developed in parts by control panel wiring using additional program steps. This "quotient expansion" process is explained in the 604 *Manual of Operation.*

Division Operation (G & H)

Division is nothing more than a series of automatically controlled transfers. The block diagram in Figure 141 shows the basic controls used in division. The Storage Unit containing the divisor (FS2 in the illustration) is fed the + (11A-20A) roll-out pulses in every cycle during division. The Counter read-in switches are conditioned to accept pulses from the entry channel throughout the division process. Therefore the divisor is transferred to the Counter once each cycle throughout the dividing process. The transfer may be in any position of the shift unit from CS5 to CS1 and may be either true or complement, depending on the settings of the CS circuit and the A-S circuit.

The tertiary timer automatically controls the column shift unit as described in the section titled "Multiplication." In a division operation the tertiary timer is automatically set to its CS5 position at the start of the process, then it advances successively to the lower order positions under control of the TC trigger. The TC trigger in turn is controlled by the sign of the counter balance. The general sequence of operations when dividing is as follows:

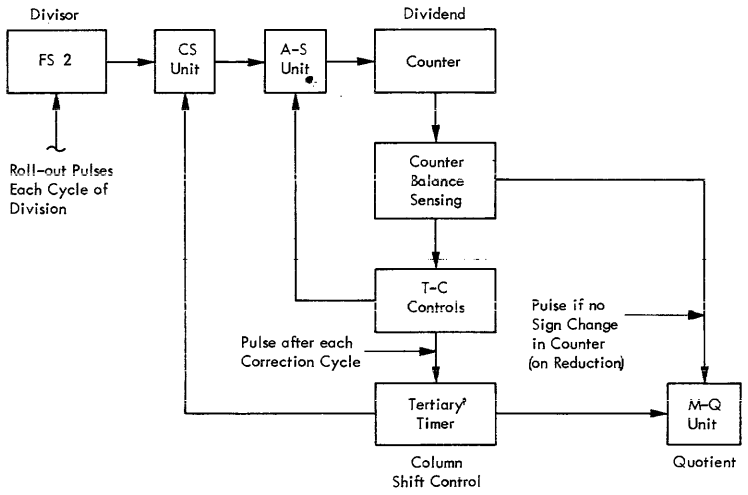

Figure 141. Logic Diagram of 604 Division

The divisor starts transferring to the Counter subtractively in the CS5 position and continues until the counter balance changes. The status of the TC trigger is then reversed so that the next transfer of the divisor to the Counter will be additive.

The TC trigger returns to its previous status after one add cycle and signals the tertiary timer to move to the next column shift.

The divisor then starts transferring to the Counter subtractively in the CS4 position, and the process repeats as above until the tertiary timer moves out of the CS1 position to indicate "end of divide."

Entries to the MQ Unit (quotient) when dividing are under control of the division counter balance-indicating circuits. If the counter balance does not change in sign when the divisor is subtractively transferred to the counter, a 1 is entered into the MQ Unit. The position of the MQ Unit receiving the 1 is determined by the status of the tertiary timer.

Selection of Dividing Process

In the preceding discussion of the principles of division by repeated subtraction, only the arithmetical principles were discussed. No attempt was made to show the actual Counter operation. In this machine a positive number appears in the Counter as a complement. Therefore, a positive dividend is in the Counter in complement form originally This means that any counter balance reducing transfers of the divisor must enter the Counter in true form, while additive transfers require that the divisor enter the Counter in complement form.

While there is no "divide minus" hub on the control panel, the machine is arranged to handle equations in which negative divisor or dividend factors (or both) may be found. Consequently it is possible to start a division program with a negative factor as the dividend. In such a case the dividend is in the Counter in true form and entries made to reduce the Counter to zero must be made as complement transfer. Correction cycle entries must be made as *true* transfers. This is just the reverse of the process used with a positive (complement) dividend in the Counter.

To set up different operations required by the two divide process possibilities a pair of control voltages are developed. These are "plus on positive DD" and "plus on negative DD" lines. The voltage produced at the start of the division determines which line is high and which process will be used.

MQ Reset Controls (G & H)

The MQ Unit is reset at the start of a division so any figures left there from any earlier operations will be cleared. This permits a correct quotient to be developed in the MQ Unit.

The H suffix MQ Reset Circuit is given by page 5-0201 of the *System Diagrams*. The reset gate for divide is applied to pin 6 of 5-5L_1 from 4A to 8A of the first cycle of divide only.

The G suffix MQ Reset Circuit is given by Figure 142. The reset gate is generated only on the first cycle of division from the output of the inverter switch 1-5$V_{1 \text{ and } 2}$. The reset gate output starts at about 3A (due to flip time of 1-5W) and lasts until 8B.

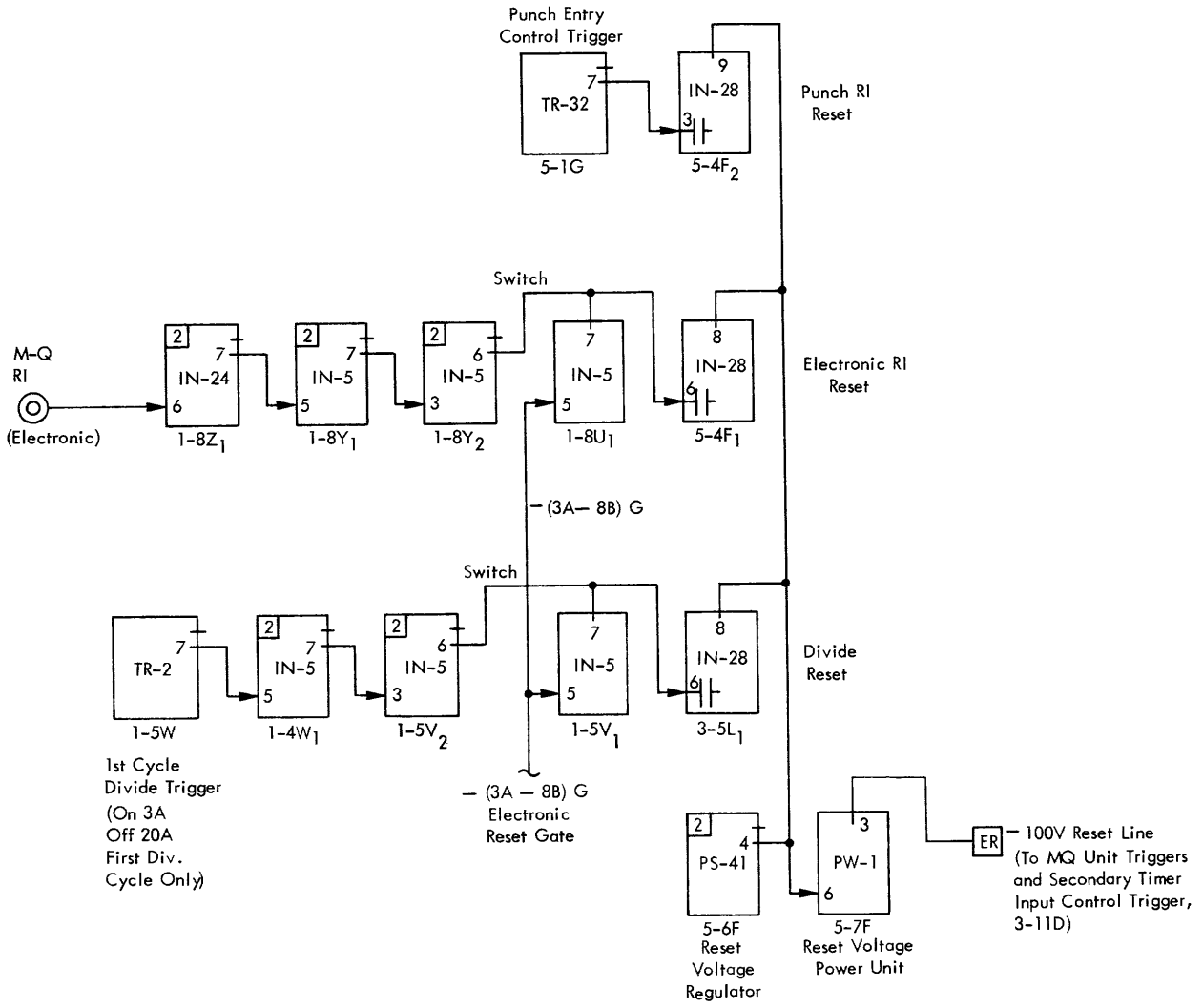

Figure 142. MQ Unit Reset Controls (G Suffix)

Division Counter Balance Indicating Circuit (G & H)

The changing of the sign of the balance in the Counter is a most important item in the 604 division operation. It controls whether the following cycle will be a correction or another attempted reduction (which may turn out to be an overdraw). Because of some special requirements, the division circuits do not use the 9-No 9 trigger circuit output to sense the Counter balance (except at the start of the division operation to set up initial conditions). Instead, a separate division circuit senses the presence or absence of a 13th order carry-out and relates this to whether the cycle was a TA or CA operation. From these facts it is discovered whether a successful reduction was accomplished or whether an overdraw occurred. The examples of Figure 143 illustrate the possibilities.

If the dividend is positive (complement form) at the start, attempted reduction cycles entail True-entry Actions to the Counter. If no 13th order carry out occurs on a true entry, the reduction was successful. If there is a carry out, the cycle was an overdraw that changed the sign of the Counter; a correction cycle must then be set up to follow.

If the dividend is negative (true form) at the start, attempted reduction cycles require Complement-entry Actions to the Counter. In this case the presence of a 13th order carry-out indicates a successful reduction. NO carry-out indicates an overdraw that changed the sign of the Counter. A correction cycle is then set up to follow.

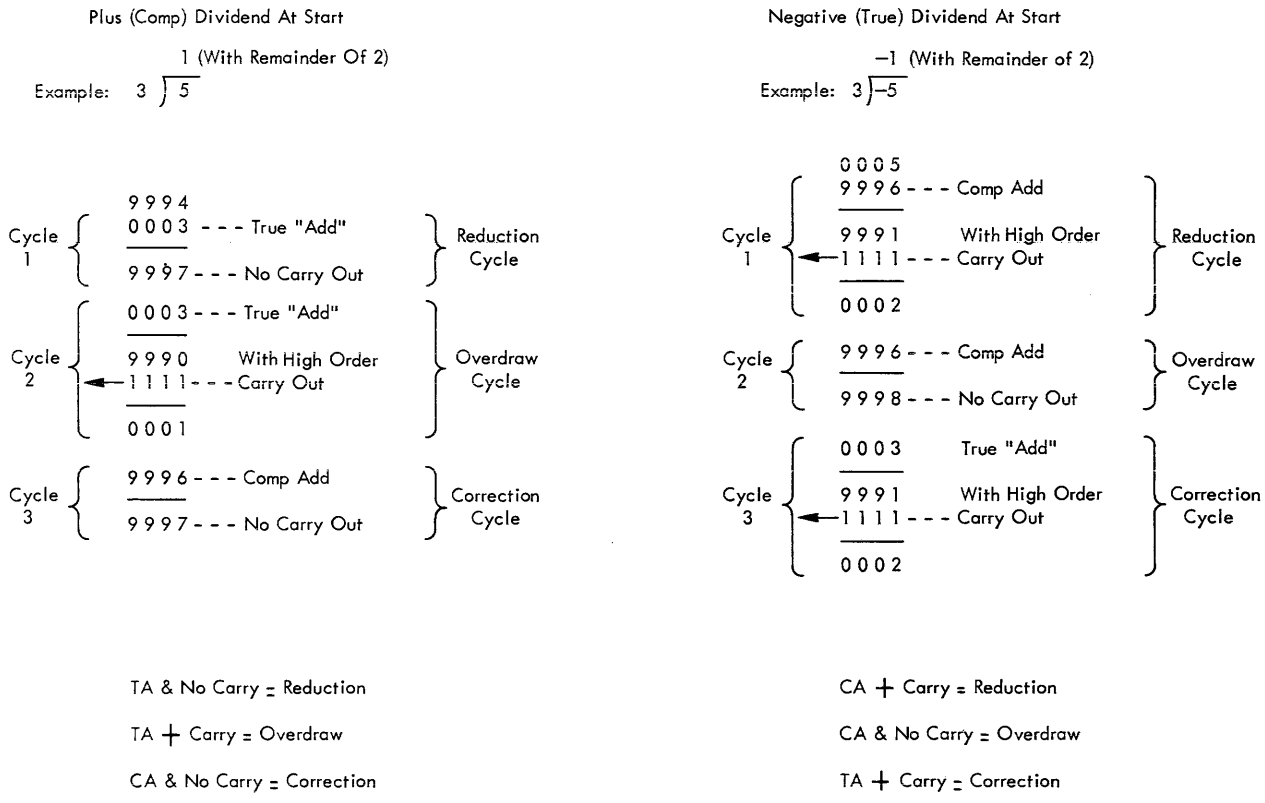

Note: This example illustrates principles of determining effect of entry on Counter sign by evaluating type of entry (TA or CA) and 13th order carry out or lack of carry out.

This example does NOT take into account the 10's complement arithmetic system used for division only.

Figure 143. Division Cycle Balance Sensing

A successful reduction cycle is thus either a True-entry Action to the Counter with NO carry out (positive dividend) or a Complement-entry Action WITH a carry out (negative dividend).

Ten's Complement Division Arithmetic (G & H)

The 604 arithmetic circuits normally use the 9's complement carry back system described in the preceding chapter. An interesting problem developed in the division operation that was most easily solved by altering the circuits to provide a 10's complement system for division. The problem arose only with a negative dividend and a divisor which divided into it evenly (no remainder). Before showing an example of the problem a few facts should be recalled.

1. Normally a zero balance in the 604 is plus (all 9's in the Counter).

2. When a division starts with a negative dividend in the Counter, any cycle in which the Counter goes plus is considered an overdraw that permits no MQ entry.

3. If the figures divide evenly, the last cycle would (with normal operation) reduce the Counter to zero (a positive figure). With a negative dividend this would force the last cycle to be considered as an overdraw. The quotient would therefore be one low.

Example: (Illustrating 9's Comp. & Carry Back)

$$3\overline{)-6}\quad -2$$

0006	Neg DD in Ctr.
9996	Comp Add the 3.
9992	Balance before carry.
⌐1111⌙	Carry & Carry back.
0003	Ctr still negative. R'd'n cyc. Add 1 to MQ*.
9996	CA the 3 again.
9999	Note that Ctr goes plus and there is no carry back. This is the overdraw cycle action. NO MQ ENTRY. Quotient will be one low.

*Neg. DD Reduction Cycle action = CA + carry out of high order.

As will be seen in the next example, the 10's complement system eliminates this problem. During division, the 13th order carry out is available, but it is blocked from reaching the units position of the Counter. By itself such an action would cause the units position of the Counter to be low under some circumstances. To compensate for this possibility a so-called "elusive 1" is entered into the units position of the Counter (during division), as required, to make up for loss of carry back. It works out that this extra pulse is needed whenever a complement entry is made to the Counter. The same "10A on Complement Action" pulse which sets the Add-Subtract Unit triggers is used during division as the "elusive 1" entry to the units position of the Counter. This adds the "elusive 1" at 10A time, before the 11B through 19B digital entries begin to arrive.

The following example shows the same problem as above, but with the modified, 10's complement arrangement used during division.

Example 1: (Illustrating 10's complement)

```
      -2
   3) -6
   0006     Neg. DD in Ctr.
   0001     Elusive 1, 10A on Comp Add.
   0007     Ctr just after 10A.
   9996     Comp. Add the 3.
   9993     Balance before carry.
←  111      Carry and carry out but no carry back.
   0003     Ctr still negative. R'd'n cyc. Add 1 to MQ*.
   0001     Elusive 1 at 10A on Comp Add.
   0004     Ctr just after 10A.
   9996     Comp Add the 3 again.
   9990     Balance before carry.
←  111      Carry and carry out, but no carry back.
   0000     Ctr still negative. R'd'n cyc. Add 1 to MQ*.
```

*Neg. DD Reduction Cycle action = CA + carry out.

No difficulties are produced in any other areas of division by this system. The Counter will stand at all zero's following any negative dividend division which does not have a remainder.

This is the only time all the Counter indicating neons should ever be dark. (Such an "all zero" zero balance *cannot* be Zero Checked by the normal 604 Zero Check circuit to be discussed later.)

Operation Sequence, Positive Dividend (G & H)

The actual Counter operation starting with a positive dividend in the Counter is shown by Figure 144. A negative divisor in the Storage Unit will not affect this charting of Counter actions in any way. The only difference will be that an extra sign pulse will reach the MQ Unit sign trigger to turn it ON (negative).

For sake of identification, the various cycles are named according to the general function performed in that cycle. Thus, a cycle in which the divisor is subtractively transferred to the Counter, without a change in the sign of the counter balance, is called a *reduction cycle.* A cycle in which the divisor is subtractively transferred to the Counter, and the sign of the counter balance changes, is called an *overdraw cycle* to indicate the reduction has been too great. A cycle in which the divisor is additively transferred to the Counter to compensate for an overdraw is termed a *correction cycle.* A reduction cycle and an overdraw cycle start out exactly the same. It is only the counter balance at the end and the carry out result that makes the difference. A quotient entry is signaled only on reduction cycles.

The following rules should be remembered for easier understanding of the dividing process:

1. The first cycle of divide is an attempted reduction cycle in CS5.

2. The reduction process continues until there is an overdraw cycle.

3. After each overdraw cycle there is a correction cycle.

4. After each correction cycle there is a column shift and return to reduction cycles.

5. The sequence of 2, 3, and 4 are repeated in each column shift.

6. At the end of cycles in which the Counter sign does not change (reduction cycles) a 1 is entered into the MQ Unit under control of the tertiary timer.

The problem of Figure 144 is analyzed cycle by cycle below. Knowledge of the general sequence of operations presented below is essential to an understanding of the circuit explanation which will follow. It will be seen that division is simply a sequence of continuous Counter entry cycles. The heart of the process is the control of the TC trigger to give the proper type of entry each cycle and to advance the tertiary timer when required.

Cycle 1. The division controls go into operation and signal a positive dividend. Also, the tertiary timer is placed in operation in its CS5 position and the TC trigger is set to TA. The divisor in FS2 is then transferred to the Counter in true form and the Counter goes negative, indicating an overdraw.

Cycle 2. The negative counter balance causes the TC trigger to go to CA, so that the divisor can be trans-

PROBLEM: $\frac{1728}{144} = 12$

DD In Ctr
DS Assumed To Be in FS2

CYCLE	OPERATION	COUNTER (Dividend)	CTR BALANCE	M - Q UNIT (Quotient)
1.	Transfer DS to Ctr in CS 5	9 9 9 9 9 9 9 9 9 8 2 7 1	Positive	0 0 0 0 0
	TA in CS 5	1 4 4		
		9 9 9 9 9 9 0 3 8 2 7 1		
	Carry Time (13th Order Carry Out)	1 1 1 1 1 1 1 1 1		
	TA & CARRY - OVERDRAW	0 0 0 0 0 0 1 4 3 8 2 7 4	Negative	0 0 0 0 0
2.	Transfer DS to Ctr in CS 5			
	Elusive 1 - 10A on CA	1		
	CA in CS 5	9 9 9 9 9 9 8 5 9 9 9 9		
		9 9 9 9 9 9 9 9 8 7 1 6 1		
	Carry Time (No 13th Order Carry Out)	1 1 1 1		
	CA & NO CARRY - CORRECTION	9 9 9 9 9 9 9 9 9 8 2 7 1	Positive	0 0 0 0 0
3.	Transfer DS to Ctr in CS 4			
	TA in CS 4	1 4 4		
		9 9 9 9 9 9 9 0 3 2 2 7 1		
	Carry Time (13th Order Carry Out)	1 1 1 1 1 1 1 1 1		
	TA & CARRY - OVERDRAW	0 0 0 0 0 0 0 1 4 2 2 7 1	Negative	0 0 0 0 0
4.	Transfer DS to Ctr in CS 4			
	Elusive 1 - 10A on CA	1		
	CA in CS 4	9 9 9 9 9 9 9 8 5 5 9 9 9		
		9 9 9 9 9 9 9 9 9 7 1 6 1		
	Carry Time (No 13th Order Carry Out)	1 1 1		
	CA & NO CARRY - CORRECTION	9 9 9 9 9 9 9 9 9 8 2 7 1	Positive	0 0 0 0 0
5.	Transfer DS to Ctr in CS 3			
	TA in CS 3	1 4 4		
		9 9 9 9 9 9 9 9 0 2 6 7 1		
	Carry Time (13th Order Carry Out)	1 1 1 1 1 1 1 1 1		
	TA & CARRY - OVERDRAW	0 0 0 0 0 0 0 0 1 2 6 7 1	Negative	0 0 0 0 0
6.	Transfer DS to Ctr in CS 3			
	Elusive 1 - 10A on CA	1		
	CA in CS 3	9 9 9 9 9 9 9 9 8 5 5 9 9		
		9 9 9 9 9 9 9 9 9 7 1 6 1		
	Carry Time (No 13th Order Carry Out)	1 1 1		
	CA & NO CARRY - CORRECTION	9 9 9 9 9 9 9 9 9 8 2 7 1	Positive	0 0 0 0 0
7.	Transfer DS to Ctr in CS 2			
	TA in CS 2	1 4 4		
		9 9 9 9 9 9 9 9 9 9 6 1 1		
	Carry Time (No 13th Order Carry Out)	1		
	TA & NO CARRY - REDUCTION	9 9 9 9 9 9 9 9 9 9 7 1 1	Positive	0 0 0 1 0
8.	Transfer DS to Ctr in CS 2			
	TA in CS 2	1 4 4		
		9 9 9 9 9 9 9 9 9 0 1 5 1		
	Carry Time (13th Order Carry Out)	1 1 1 1 1 1 1 1 1 1 1		
	TA & CARRY - OVERDRAW	0 0 0 0 0 0 0 0 0 0 1 1 5 1	Negative	0 0 0 1 0
9.	Transfer DS to Ctr in CS 2			
	Elusive 1 - 10A on CA	1		
	CA in CS 2	9 9 9 9 9 9 9 9 9 8 5 5 9		
		9 9 9 9 9 9 9 9 9 9 6 0 1		
	Carry Time (No 13th Order Carry Out)	1 1		
	CA & NO CARRY - CORRECTION	9 9 9 9 9 9 9 9 9 9 7 1 1	Positive	0 0 0 1 0
10.	Transfer DS to Ctr in CS 1			
	TA in CS 1	1 4 4		
	No Carry			
	TA & NO CARRY - REDUCTION	9 9 9 9 9 9 9 9 9 8 5 5	Positive	0 0 0 1 1
11.	Transfer DS to Ctr in CS 1			
	TA in CS 1	1 4 4		
	No Carry			
	TA & NO CARRY - REDUCTION	9 9 9 9 9 9 9 9 9 9 9 9 9	Positive	0 0 0 1 2
12.	Transfer DS to Ctr in CS 1	1 4 4		
		9 9 9 9 9 9 9 9 9 9 0 3 3		
	Carry Time (13th Order Carry Out)	1 1 1 1 1 1 1 1 1 1 1 1 1		
	TA & CARRY - OVERDRAW	0 0 0 0 0 0 0 0 0 0 0 1 4 3	Negative	0 0 0 1 2
13.	Transfer DS to Ctr in CS 1			
	Elusive 1 - 10A on CA	1		
	CA in CS 1	9 9 9 9 9 9 9 9 9 8 5 5		
	No Carry			
	CA & NO CARRY - CORRECTION	9 9 9 9 9 9 9 9 9 9 9 9 9	Positive	0 0 0 1 2
14.	Shift out of CS 1	9 9 9 9 9 9 9 9 9 9 9 9 9	Positive	0 0 0 1 2
	END OF DIVISION (Idle Cycle)			

(Any Remainder Will Be Left in Counter

Figure 144. Division Starting With a Positive Dividend

ferred to the Counter in complement form to correct for the preceding overdraw. The elusive 1 is added at 10A, and at the end of this cycle the dividend is restored to its original value. The Counter is again positive.

Cycle 3. The positive counter balance causes the TC trigger to return to TA. This signals the tertiary timer to advance one step to CS4. The divisor is then transferred to the Counter in true form in the CS4 position. The Counter again goes negative which signals an overdraw.

Cycle 4. The negative counter balance causes the TC trigger to go to CA, and the elusive 1 is added at 10A. The divisor is transferred to the Counter in complement form to correct for the preceding overdraw. The dividend is again restored to its original (positive) value.

Cycle 5. The TC trigger returns to TA and signals the tertiary timer to go to CS3. A true transfer of the divisor again drives the Counter negative.

Cycle 6. The TC trigger goes to CA, and a complement transfer of the divisor (with the elusive 1) restores the dividend to its original positive value.

Cycle 7. The TC trigger returns to TA and signals the tertiary timer to go to CS2. The divisor is transferred to the Counter in true form. The counter balance remains positive indicating a reduction of the dividend amount (without sign change) by the value of the divisor. A 1 is entered in the tens position of the MQ Unit (quotient).

Cycle 8. The TC trigger remains in TA because the counter balance is still positive. A second true transfer of the divisor in the CS2 position drives the Counter negative signaling an overdraw.

Cycle 9. The TC trigger goes to CA. The elusive 1 is entered at 10A. The complement transfer of the divisor in the CS2 position then restores the Counter to the positive value which it had before the overdraw cycle.

Cycle 10. The TC trigger returns to TA and signals the tertiary timer to go to CS1. The divisor is then transferred in true form. The counter balance remains positive; so a 1 is entered in the units position of the MQ Unit.

Cycle 11. The TC trigger remains in TA, and a second true transfer of the divisor is made in CS1. The counter balance is still positive, so another 1 is entered in the units position of the MQ Unit.

Cycle 12. A third true transfer of the divisor in CS1 drives the Counter negative to indicate an overdraw.

Cycle 13. The TC trigger goes to CA. The elusive 1 and a complement transfer of the divisor in CS1 restore the Counter to the value it held before the overdraw cycle. The Counter value at this point is the remainder, which in this case is zero.

Cycle 14. The TC trigger returns to TA and signals the tertiary timer to advance. The timer moves out of CS1 and goes off, thereby signaling "end of divide" to cut off division. The machine "idles" through the balance of this cycle after receiving the "end of divide" signal.

Division Control Voltages, Positive Dividend (G & H)

When division is programmed the DIVIDE hub is wired to the proper PROGRAM EXIT hub. Also, the RO hub of the Storage Unit containing the divisor is wired to another PROGRAM EXIT of the same step. Thus, the divisor will be rolled out during each cycle of division.

The objectives of the control circuits are:

A. Reset MQ Unit.

B. Condition MQ sign circuit.

C. Develop Counter RI voltage.

D. Provide an elusive 1, 10A on CA.

E. Block the carry back to the units position of the Counter.

F. Prevent the TC trigger from restoring.

G. Place the TC trigger under control of division circuits.

H. Turn on the TC trigger.

I. Condition MQ entry.

J. Test for positive dividend.

K. Turn on tertiary timer CS5.

L. Prevent program from advancing.

H SUFFIX CIRCUITS

OBJECTIVE A: Reset MQ.

1. (Page 7-0201.) Divide trigger, 6B, turns on at 4A of divide program and remains on until end of division.

2. First cycle divide trigger, 6D, turned on from output of divide trigger and turns off at 20A.

3. IN-6 unit, $7G_1$ is cut off by the - (3A-8B) G.

4. The ON side output of 6D cuts off $7G_2$ to produce a + (4A-8B) G to reset the MQ.

OBJECTIVE B: Condition MQ sign circuit.

5. OFF side output of 6D feeds through a CF unit to condition

the negative DD switch at 6E and condition the MQ sign circuit on 8-0103.

OBJECTIVE C: Counter RI voltage.

6. PS-11 unit, 6E, cannot conduct when Counter is positive at beginning of first cycle of divide, and negative DD trigger 6F remains OFF to condition IN-6 unit $7F_1$.

7. Divide trigger right side output is fed through a CF-5 unit to signal "+(c) on Div."

8. The "+(c) on Div" voltage is taken to page 4-0401 where the "+ on Ctr RI" voltage is developed.

OBJECTIVE D: Elusive 1.

9. PS-7 unit 3K (page 7-0201) conditioned to conduct "+10A on CA" signal (elusive 1).

OBJECTIVE E: Block carry back.

10. IN-6 unit, $1K_2$, conducts to block 13th order carry back to units position of the Counter.

OBJECTIVE F: Stop TC restoring.

11. IN-6 unit, $6G_2$, inverts "+(c) on Div" signal to 8-0102 to disable the TC trigger reset circuit.

OBJECTIVE G: Division control of TC.

12. The "−(c) on Div" voltage from 8-0102 conditions the IN-6 unit, $9B_2$ (page 7-0201) to place the TC trigger under control of division circuits.

OBJECTIVE H: Turn on TC (true).

13. The divide TC control trigger conditions $9B_1$, and with 12 above gives a positive output through the CF-5 unit $7E_1$ to the TC trigger circuit to condition grid 2 of the PS-11 unit at 8D (page 8-0102).

14. TC trigger turned on (TA) by 7AB pulse through 8D.

OBJECTIVE I: Condition MQ entry.

15. The "−(c) on Div" signal from 8-0102 conditions the IN-6 unit, $9C_2$, (7-0201) to place the MQ entry (5-0101) under control of division circuits.

OBJECTIVE J: Positive dividend conditioning.

16. The same signal conditions the IN-6 unit, $7F_2$, (7-0201) and with 6 above signals "+ on pos DD."

OBJECTIVE K: CS5 shift.

17. The "+(c) on Div" signal from the CF-5 unit, $6C_1$, is fed through a CF-10 unit, $5E_2$, page 7-0101, to condition the PS-11 unit, 5F.

18. M-D trigger 5G turns on at 8A of first cycle of divide and stays on until the end of division.

19. The shift from pin 7 of 5G is inverted and fed to the CS5 tertiary timer trigger, 10K (page 6-0201), to turn it ON at 8A time.

OBJECTIVE L: Stop program advance.

20. The "+(c) on Div" signal that conditioned the PS-11 unit at 5F (7-0101) is also taken to page 1-0201 to control one side of the inverter switch combination $2E_{1 \text{ and } 2}$ to block the normal program advance at 2AB time.

Thus the control voltages are established for division with a positive dividend. The first cycle of a positive dividend division is a TA transfer of the dividend to the Counter. The TC trigger turns on (TA) at 7A time and the arithmetic process of division begins.

G SUFFIX CIRCUITS

The objectives discussed above and the circuits to obtain them are indicated on Figure 145. The circuits are activated by turning on the divide trigger, 1-4Z, the first cycle of divide trigger, 1-5W, and the multiply-divide trigger, 1-7V.

OBJECTIVE: To activate the division circuits, Figure 145.

1. The minus shift at 2A into the DIVIDE hub from a PROGRAM EXIT hub cuts off $1\text{-}6Z_1$ and conditions grid 3 of the PS-3 unit at 1-6Y.

2. At 3A the PS unit 1-6Y conducts. Minus output turns on the divide trigger, 1-4Z, at 3A. This trigger will stay on until 7A of the last cycle of divide (which is actually an idle cycle after all arithmetical functions have been completed).

3. The minus output from the left plate of the divide trigger cuts off the PW-3 at 1-7Y and produces a "plus on divide" conditioning voltage which activates circuits for objectives C, D, and E, as indicated by Figure 145.

OBJECTIVE C: Counter RI voltage.

4. This is produced when the IN-1 at $1\text{-}9V_1$ conducts, cutting off the PW-3 at 1-9U, the output of which feeds directly to the Counter read-in switches.

OBJECTIVE D: 10A on complement add.

5. This is made available from the priming of grid 3 of the PS-36 unit at 3-5J.

OBJECTIVE E: Suppression of Counter carry-back.

6. This is accomplished by the conduction of the IN-1 at $3\text{-}3J_1$. All Counter carry-backs must pass through the right half of this unit, $3\text{-}3J_2$. 13th order carry-outs are minus shifts which cut off $3\text{-}3J_2$ and normally produce a plus shift at the output. By making $3\text{-}3J_1$ conduct during division, the combined plates are held down. Therefore no carry-back shifts are fed to the IN-4 at $3\text{-}3L_2$. (The output of $3\text{-}3L_2$ runs to the Counter units position value 1 trigger.)

OBJECTIVE G: Activate division TC controls.

7. The "plus on divide" input into the PW-2 unit at 1-7Z produces a full output "minus on divide" level which is used to activate objectives G, H, and I. The circuits from these objectives are on Figure 147.

8. The "minus on divide" input into $5\text{-}6G_2$ (Figure 147) cuts off this half of the inverter switch and places the TC control trigger switch, 5-7G, under control of the divide TC control trigger, 5-5G. (This complete circuit is designed to allow a 7AB pulse to reach the TC trigger during each division cycle except those cycles following a reduction cycle. Operating details will be covered later.)

OBJECTIVE H: Turn on the TC trigger.

9. With a positive dividend at the start, the TC trigger must be turned to true before the first Counter entry is made. The divide TC control trigger, 5-5G, (Figure 147) is OFF at the start of divide. The minus output from the right plate cuts off $5\text{-}6G_1$ and, in combination with step 9 above, allows grid 3 of 5-7G to go plus. A 7AB pulse can thus reach the TC trigger and turn it on (to true). (With a negative DD, 5-5G is plate pulled on prior to 7AB. Thus, the 7AB pulse does not pass through 5-7G on the first cycle and the TC trigger is left OFF.)

OBJECTIVE I: Activate MQ entry circuit for division.

10. Cutting off the right half of the inverter switch, $5\text{-}7H_2$, (Figure 147) permits 1AB pulses at the end of a reduction cycle (only) to pass to the inputs of $5\text{-}4G_1$ and $3\text{-}11H_2$.

OBJECTIVE A: Reset the MQ.

11. On Figure 145, the tapped output from the PW-2 unit at 1-7Z turns on the first cycle of divide trigger, 1-5W, at 3A. This trigger will be turned off at 20A of the first cycle and will not come on again until another division is programmed.

12. The plus 3A-20A output from the right plate of the first cycle of divide trigger is inverted to a minus gate by the IN-5 unit at $1\text{-}4W_1$. The output from $1\text{-}4W_1$ primes the MQ divide reset inverter switch, 1-5V, to pass the 3A-8B reset gate to the MQ reset circuits.

OBJECTIVE B: Activate the MQ sign circuits.

13. The output from $1\text{-}4W_1$, a minus 3A-20A gate on the first division cycle only, is fed to 3-8K, Figure 136, to allow the MQ Unit sign trigger to be set properly at the start of the operation. The MQ sign trigger is set on the first divide cycle and is not changed after that.

OBJECTIVE F: Block TC restoring pulse.

14. The minus 3A-20A gate from the left plate of the first cycle of divide trigger, 1-5W, is inverted to a plus gate by the IN-5 at $1\text{-}4W_2$. This primes the divide switch at 1-7W to pass the plus

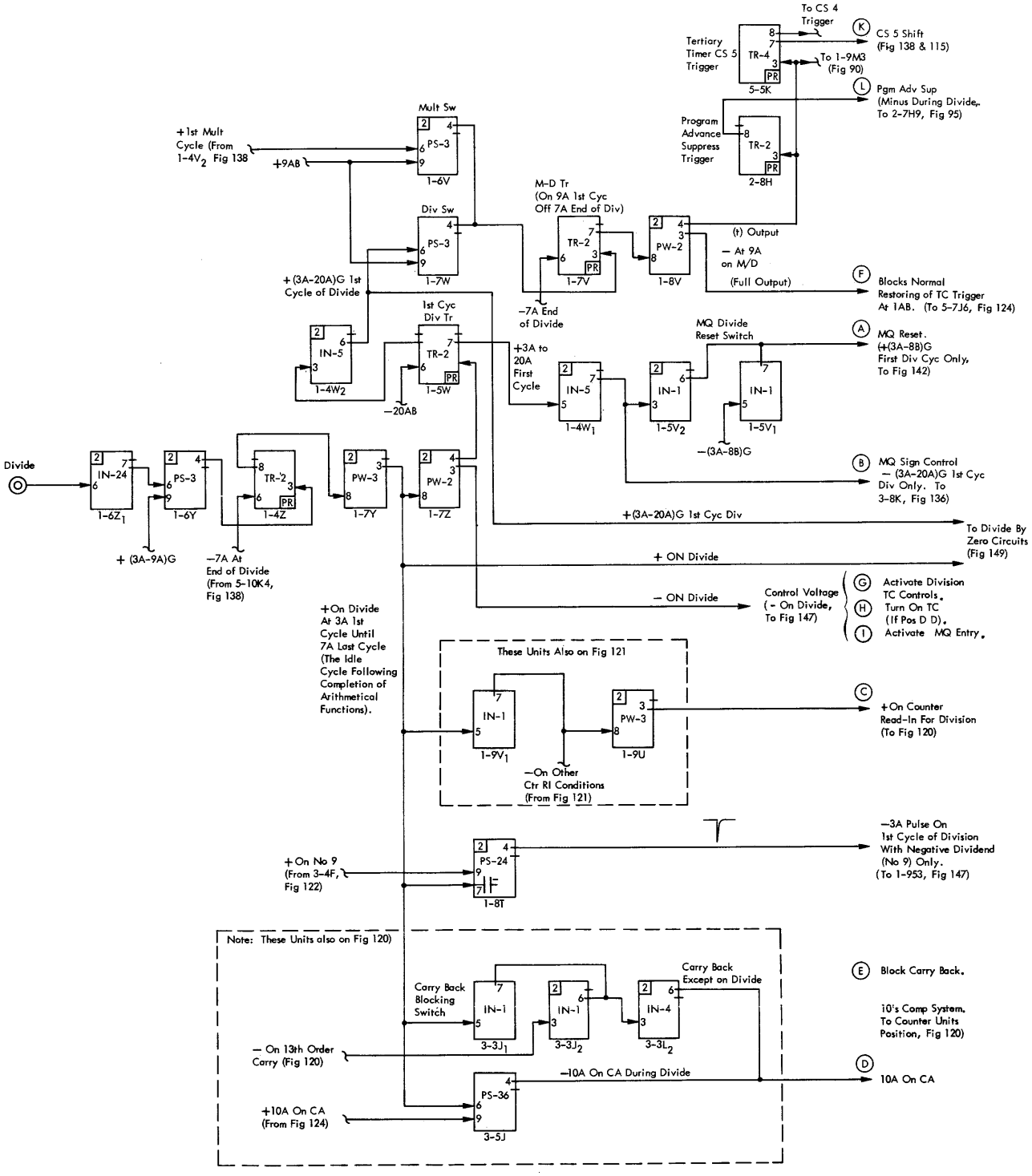

Figure 145. Division Setup Control Circuits (G Suffix)

9AB pulse during the first divide cycle only.

15. The multiply-divide trigger, 1-7V, turns on at 9A and stays on until 7A of the last divide (idle) cycle.

16. The plus ouput from the right plate of 1-7V produces a minus full and tapped output, starting at 9A, from the PW-2 unit at 1-8V. The full output is used to cut off 5-7J (Figure 124) and blocks the 1AB pulse which normally pulls the TC trigger OFF each cycle.

OBJECTIVE K: Shift to CS5.

17. The tapped output from the PW-2 unit at 1-8V turns on the tertiary timer CS5 trigger 5-5K, to start the division operation in CS5.

OBJECTIVE L: Suppress program advance while division cycles are being taken.

18. The tapped output from 1-8V turns on 2-8H, the program advance suppress trigger.

The arithmetical steps of the division operation can now begin. From this point on, the TC trigger and its division controls (Figure 147) will be the most active elements in the circuit. The control voltages set up during the first cycle remain relatively unchanged until the "end of division" signal turns them off.

Circuit Operation for Division Arithmetical Steps (G & H)

Each cycle of division is either a reduction cycle, overdraw cycle, or correction cycle. (There is also one "idle cycle" at the end to restore the division control circuits to normal.) Reduction and overdraw cycles start out in exactly the same way. It is only at the end of the cycle that the type of cycle can be determined. If the Counter sign did not change, the cycle was a reduction. If it did change, the cycle was an overdraw.

The general order of division cycles is unvarying. Counter entries are made each cycle (except the idle cycle at the end). We start with a reduction entry. If a reduction attempt is successful (no Counter sign change), it will be followed by another reduction attempt. If a reduction attempt results in an overdraw, it will be followed by a correction. A correction cycle is always followed by a column shift and a return to attempted reductions. The possibilities are illustrated by Figure 146. An understanding of the circuit philosophy presented by this illustration will make the following circuit descriptions much easier to follow.

H SUFFIX CIRCUIT OPERATION WITH POSITIVE DIVIDEND

OBJECTIVE: (Figure 144 and pages 7-0201, 8-0102.) Problem: $1728 \div 144 = 12$. Perform a controlled subtraction process in the Counter by reading out of the divisor Storage Unit and reading into the Counter. The Counter contains a positive figure at the beginning of division. The quotient is developed in the MQ Unit.

Cycle 1

1. RO divisor; RI counter (TA in CS5).

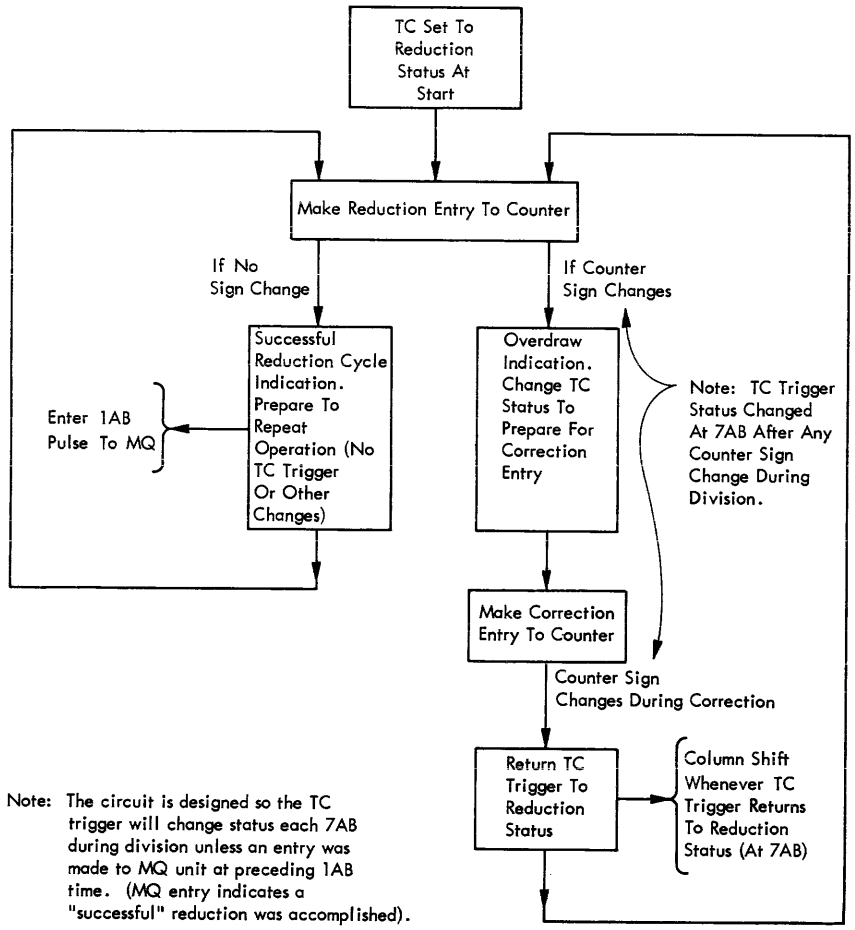

Figure 146. General Division Cycle Sequence Options (G and H)

2. 13th order carry (steps 1 and 2 constitute an overdraw).

Cycle 2

1. PS-11 unit, 8D, conducts 7AB pulse.
2. TC trigger turns off (CA) at 7A time.
3. Elusive 1 at 10A.
4. RO divisor; RI Counter (CA in CS5).
6. No 13th order carry (steps 4 and 5 constitute a correction).

Cycle 3

1. PS-11 unit, 8D, conducts 7AB pulse.
2. TC trigger turns on (TA) at 7A time.
3. TC trigger output inverted and fed through PS-25 unit, 3M, to cut off PS-2 unit, 3L, page 6-0201. PW-4 unit 11K conducts to advance the tertiary timer to CS4.
4. RO divisor; RI Counter (TA in CS4).
5. 13th order carry (4 and 5, overdraw).

Cycle 4

1. PS-11 unit, 8D, conducts 7AB pulse.
2. TC trigger turns off (CA) at 7A time.
3. Elusive 1 at 10A.
4. RO divisor, RI Counter (CA in CS4).
5. No 13th order carry (4 and 5, correction).

Cycle 5

1. PS-11 unit, 8D, conducts 7AB pulse.
2. TC trigger turns on (TA) at 7A time.
3. TC trigger ouput inverted and fed through PS-25 unit, 3M, to cut off PS-2 unit, 3L, page 6-0201. PW-4 unit 11K conducts to advance the tertiary timer to CS3.
4. RO divisor; RI Counter (TA in CS3).
5. 13th order carry (4 and 5, overdraw).

Cycle 6

1. PS-11 unit, 8D, conducts 7AB pulse.
2. TC trigger turns off (CA) at 7A time.
3. Elusive 1 at 10A.
4. RO divisor; RI Counter (CA in CS3).
5. No. 13th order carry (4 and 5, correction).

Cycle 7

1. PS-11 unit, 8D, conducts 7AB pulse.
2. TC trigger turns on (TA) at 7A time.
3. TC trigger ouput inverted and fed through PS-25 unit, 3M, to cut off PS-2 unit, 3L, page 6-0201. PW-4 unit 11K conducts to advance the tertiary timer to CS2.
4. RO divisor; RI Counter (TA in CS2).
5. No 13th order carry (4 and 5, reduction).
6. IN-1 unit, 7A, is cut off at 1A time when there is no 13th order carry.
7. PS-2 unit, 9D, conducts 1AB pulse.
8. Output from 9D is inverted twice to turn on divide TC control trigger, 9A.
9. Output from 9D is inverted twice to send a -1AB signal to MQ Unit in a column shift of 2. MQ Unit contains 10.

Cycle 8

1. Divide TC control trigger output -(1A-11A) G on reduction cycles prevents PS11 unit, 8D, from conducting at 7AB time. Divide TC control trigger is on from 1A of cycle 7 to 11A of cycle 8.
2. TC trigger stays ON (TA).
3. RO divisor; RI Counter (TA in CS2).
4. 13th order carry (3 and 4, overdraw).

Cycle 9

1. PS-11 unit, 8D, conducts 7AB pulse.
2. TC trigger turns off (CA) at 7A time.
3. Elusive 1 at 10A.
4. RO divisor; RI Counter (CA in CS2).
5. No 13th order carry (4 and 5, correction).

Cycle 10

1. PS-11 unit, 8D, conducts 7AB pulse.
2. TC trigger turns on (TA) at 7A time.
3. TC trigger output inverted and fed through PS-25 unit, 3M, to cut off PS-2 unit, 3L, page 6-0201. PW-4 unit, 11K, conducts to advance the tertiary timer to CS1.
4. RO divisor; RI Counter (TA in CS1).
5. No 13th order carry (4 and 5, reduction).
6. IN-1 unit at 7A is cut off at 1AB time when there is no 13th order carry.
7. PS-2 unit, 9D, conducts a 1AB pulse.
8. Output from 9D is inverted twice to turn on divide TC control trigger, 9A.
9. Output from 9D is inverted twice to send a -1AB signal to MQ Unit in a column shift of 1. MQ Unit contains 11.

Cycle 11

1. Divide TC control trigger output -(1A-11A) G on reduction cycles prevents PS-11 unit, 8D, from conducting at 7AB time.
2. TC trigger stays ON (TA).
3. RO divisor; RI Counter (TA in CS1).
4. No 13th order carry (3 and 4, reduction).
5. IN-1 unit, 7A, is cut off at 1AB time when there is no 13th order carry.
6. PS-2 unit, 9D, conducts 1AB pulse.
7. Output from 9D is inverted twice to turn on divide TC control trigger, 9A.
8. Output from 9D is inverted twice to send a -1AB signal to MQ Unit in a column shift of 1. MQ Unit contains 12.

Cycle 12

1. Divide TC control trigger output -(1A-11A) G on reduction cycles prevents PS-11 unit, 8D, from conducting at 7AB time.
2. TC trigger stays ON (TA).
3. RO divisor; RI Counter (TA in CS1).
4. 13th order carry (3 and 4, overdraw).

Cycle 13

1. PS-11 unit, 8D, conducts 7AB pulse.
2. TC trigger turns off (CA) at 7A time.
3. Elusive 1 at 10A.
4. RO dividend; RI Counter (CA in CS1).
5. No 13th order carry (4 and 5, correction).

Cycle 14

1. PS-11 unit, 8D, conducts 7AB pulse.
2. TC trigger turns on (TA) at 7A time.
3. TC trigger output inverted and fed through PS-25 unit, 3M, to cut off PS-2 unit, 3L, page 6-0201. PW-4, 11K, conducts to advance the tertiary timer out of CS1.
4. CS1 of tertiary timer turning off is "end of divide" signal.
5. Divide trigger and multiply-divide trigger turned off by "end of divide" signal to remove division control voltages.
6. RO divisor; no Counter RI voltage.
7. Advance program unit at 2AB of next electronic cycle.

G SUFFIX CIRCUIT OPERATION WITH POSITIVE DIVIDEND

After the division control voltages have been set up, there are three general areas that need continuous control. These are indicated on Figure 147 as TC Trigger Control, Quotient Entry Control and Tertiary Timer Control.

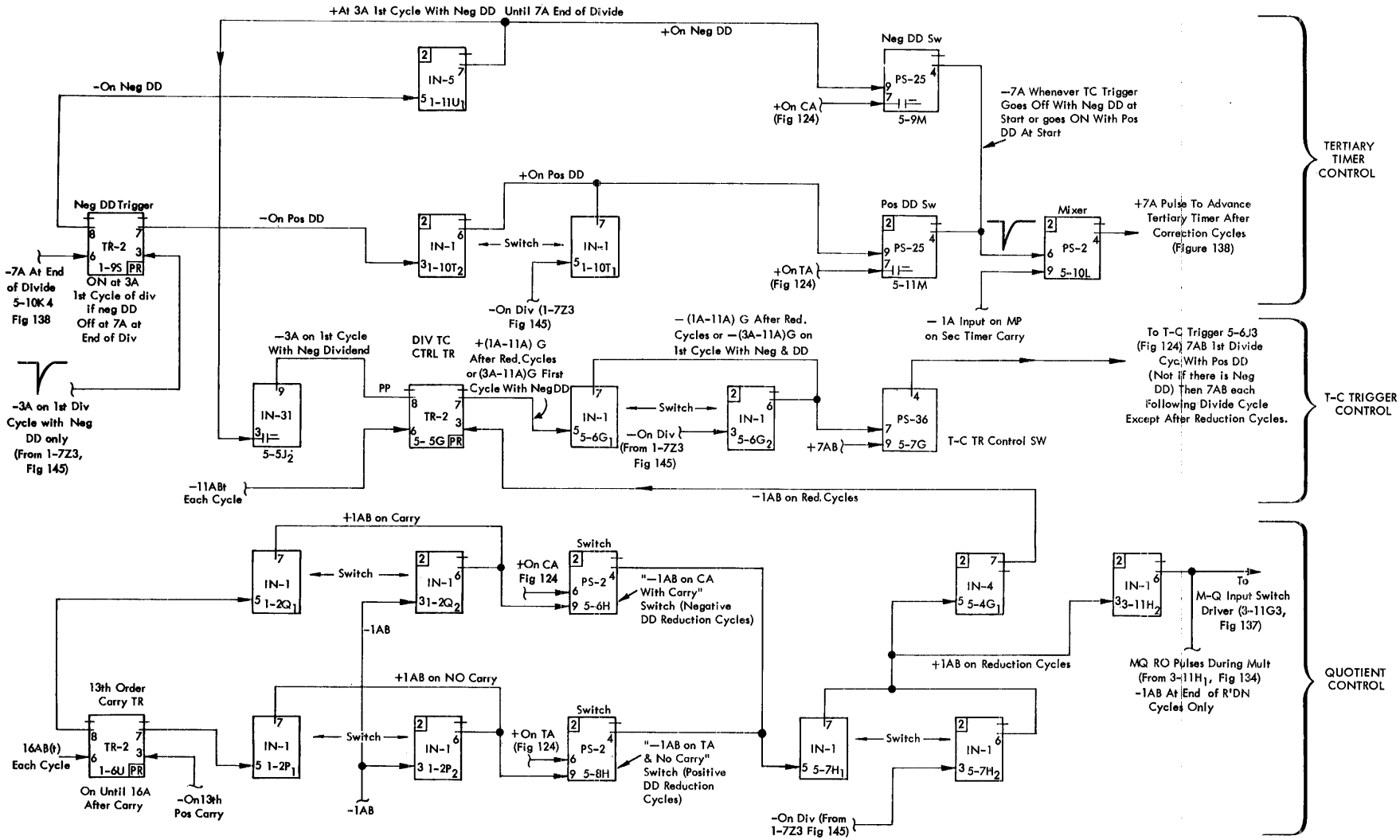

Figure 147. Division "Cycle by Cycle" Control (G Suffix)

TC Control Circuit. This circuit is designed basically to allow a 7AB pulse to change the status of the TC trigger each cycle. However, this pulse is blocked after any 1AB entry to the MQ Unit (indicating a successful reduction cycle).

OBJECTIVE: 7AB pulse to TC trigger (unless preceding cycle was a successful reduction). (Figure 147.)

1. The Division TC control trigger, 5-5G, is "normally" OFF due to the -11AB pulse to its left grid each cycle. The minus output from the right plate cuts off 5-6G_1. Since 5-6G_2 is cut off during division, the combined plates are allowed to go positive and prime grid 3 of the TC trigger control pentagrid switch unit, 5-7G. Minus 7AB pulses from the switch plate flip the TC trigger, 5-6J on Figure 124.

OBJECTIVE: Eliminate 7AB pulse to TC trigger after a successful reduction cycle. (Figure 147.)

2. A successful reduction cycle is indicated by an entry to a position of the MQ Unit at 1AB. (The 1AB reduction cycle pulse circuit will be described later.) The "plus 1AB on Reduction Cycles" pulse feeds inverter units at both 5-4G_1 and 3-11H_2. The output from 5-4G_1 is used to turn on the division TC control trigger, 5-5G (at the end of reduction cycles only).

3. The trigger, 5-5G, will stay on until turned off at 11A by the 11AB (t) pulse applied to its left grid each cycle. The trigger will thus be ON during 7AB time following each reduction cycle.

4. If the trigger is ON, the plus output from the right plate will make 5-6G_1 conduct. The low level output from 5-6G_1 cuts off the PS unit at 5-7G and blocks the 7AB pulse from reaching the TC trigger. The immediately following Counter entry cycle will thus be in reduction cycle form.

Quotient Entry Control. This circuit is designed to add a 1AB pulse to an MQ Unit position at the end of each reduction cycle only. (The MQ Unit position receiving the entry is controlled by the column shift only.)

OBJECTIVE: 1AB only after reduction cycles.

1. If the original dividend in the Counter is positive, a reduction cycle is illustrated by **no carry out on a true action entry,** as illustrated by Figure 143.

2. The PS unit at 5-8H (Figure 147) is grid 3 primed on each true action cycle.

3. The unit at 1-2$P_{1 \text{ and } 2}$ is an inverter switch controlled by the 13th order carry trigger at 1-6U. This trigger is pulsed off at 16AB of each cycle. If there is no carry, this trigger will therefore be OFF at 1AB time. If the trigger is OFF, 1-2P_1 will be cut off. When 1-2P_2 is cut off by the minus 1AB input the combined plates can go positive during 1AB time and cause the PS unit at 5-8H to conduct.

4. If a carry out does occur, the cycle was not a reduction cycle. The trigger at 1-6U will be turned on by the carry. The resulting conduction through 1-2P_1 will stop the 1AB pulse from appearing on the combined plates of 1-2$P_{1 \text{ and } 2}$.

5. With a negative dividend in the Counter to start, the reduction cycle indication is **a carry out on a complement add.** The inverter switch at 1-2$Q_{1 \text{ and } 2}$ passes a 1AB after a carry out only (when 1-6U is ON). The PS unit at 5-6H is primed to pass pulses only on complement add cycles. Together the two switches pass a 1AB only on complement add with a carry (just as 1-2P and 5-8H pass a 1AB pulse only on a true action entry with no carry).

6. The 1AB pulse at the end of a reduction cycle (only) can pass through the inverter switch, 5-7$H_{1 \text{ and } 2}$ only during division. During division any such pulses will appear on the combined plates as a plus 1AB.

7. The IN unit at 3-11H_2 sends a minus 1AB reduction cycle pulse to 3-11G, the driver for the five MQ Unit position input switches (Figure 137). Only the particular switch primed by the column shift unit will permit the pulse to pass to its storage trigger assembly.

Tertiary Timer Control. Whenever the TC trigger returns to its reduction cycle status (after being in its other status for the correction cycle), the column shift is stepped to the next lower order by advancing the tertiary timer.

OBJECTIVE: Advance tertiary timer after each correction cycle.

1. The unit at 5-10L (Figure 147) is a pentagrid mixer to combine division and multiplication inputs to the tertiary timer. The grid 3 inputs are for division.

2. Grd 3 of 5-10L is fed from two normally cut off PS units at 5-9M and 5-10M. Grid 1 of only one of these switches is primed positive during any division operation. A positive dividend at the start requires reduction attempts to be in the form of true action entries to the Counter. A negative dividend at the start requires reduction attempts to be in the form of complement add entries. In either case correction cycle entries are of the opposite type. It is the RETURN to the reduction cycle type of Counter entries (whether TA or CA, depending on original dividend) which must cause the tertiary timer advance.

3. The negative dividend trigger at 1-9S is set during the first cycle and indicates without changing throughout the division whether a positive or a negative dividend was in the Counter at the start. The output of this trigger through 1-11U_1 or 1-10T_2, conditions positive grid 1 of either 5-9M (for negative DD) or 5-11M (for positive DD).

4. The grid 3 inputs to 5-9M and 5-11M reflect the setting of the TC trigger and therefore change whenever the TC trigger status is changed (as it is for correction cycles and for the return to reduction cycles.) Note the capacitor input to grid 3 of these units.

5. *If we assume a positive dividend operation,* 5-11M will be the active switch. Reduction cycles will be in TA form and the input to pin 7 of 5-11M will be plus. Due to the input capacitor, however, the steady state will not couple to the grid and the tube will remain cut off.

6. On the correction cycle (a CA entry), pin 7 of 5-11M goes negative at 7A (when the TC trigger status is changed by the pulse from 5-7G). A negative pulse appears on grid 3 of the tube in 5-11M, but causes no action because the tube was already cut off.

7. At 7A of the cycle following the correction cycle the TC is returned to the CA status. Pin 7 of 5-11M shifts positive at 7A. This shift through the input capacitor causes a plus pulse to appear on grid 3 of the tube in 5-11M. Since grid 1 is "plus on pos DD", the tube conducts and sends a minus 7A time pulse to 5-10L.

8. 5-10L is momentarily cut off, producing a plus 7A time pulse which advances the tertiary timer ring (Figure 138).

9. *With a negative dividend operation* 5-9M (Figure 147) is the active tube and the same general type of action occurs. The grid of the tube in 5-9M will receive a pulse through the capacitor at 7A when the TC trigger returns to CA after a TA correction cycle.

10. The unit at 1-10T_1 conducts to keep 5-11M cut off when not dividing. Grid 1 of 5-11M would otherwise be positive when not dividing because the negative dividend trigger, 1-9S, is turned off at 7A of the last, idle cycle of division and remains OFF.

Figure 144 illustrates the problem $1728 \div 144 = 12$. The following brief description of the cycle by cycle action should be related to the previous discussion of Figure 147. This is a positive dividend operation. The TC trigger is therefore set to TRUE at 7AB of the first division cycle.

Cycle 1 turns out to be an overdraw cycle. No 1AB entry is made to the MQ Unit; so, the division TC control trigger, 5-5G, is NOT turned on.

Cycle 2 becomes a correction cycle. Because 5-5G is OFF, the 7AB pulse passes through 5-7G to flip the TC trigger to COMPLEMENT. The divisor is added back into the Counter. No 1AB is entered into the MQ Unit at 5-5G is not turned on.

Cycle 3. Since 5-5G was not turned on in cycle 2 the TC trigger receives a 7AB pulse from 5-7G to turn the TC trigger back to

TRUE. This makes 5-11M conduct momentarily and send a pulse to advance the tertiary timer to CS4. The divisor entry to the Counter this cycle causes an overdraw. No 1AB entry is made to the MQ Unit. 5-5G is not turned on.

Cycle 4 is a CA correction cycle similar to cycle 2 (no 1AB into MQ and 5-5G left OFF).

Cycle 5 is a column shift to CS3 and attempted TA reduction cycle that ends as an overdraw, similar to cycle 3.

Cycle 6 is another CA correction cycle similar to cycle 2 (no 1AB into MQ and 5-5G left OFF).

Cycle 7. Since 5-5G was not turned on in cycle 6, the TC trigger receives a 7AB pulse to restore it to the TRUE, reduction cycle status. This return to TRUE makes 5-11M conduct momentarily and send a pulse to advance the tertiary timer to CS2. The true entry of the divisor to the Counter in CS2 does not cause an overdraw on this cycle. There is **no carry on this** TA entry reduction cycle. 1-6U is left OFF, so a 1AB pulse leaves the plate of 5-8H. An entry is made to the second order of the MQ Unit and the trigger at 5-5G is turned ON.

Cycle 8. Since 5-5G was turned ON in cycle 7, there will be no 7AB pulse through 5-7G to change the TC trigger status. It stays TRUE to cause a reduction type of entry. However, there is an overdraw this time (TA with CARRY). No 1AB pulse enters the MQ Unit and the trigger at 5-5G is left OFF.

Cycle 9 is a CA correction cycle similar to cycle 2 (no MQ entry and 5-5G left OFF.)

Cycle 10 is similar to 7. With 5-5G OFF from cycle 9, the TC trigger returns to true at 7A and causes a tertiary timer advance to CS1 at about the same time. The true entry of the divisor to the Counter does not cause an overdraw on this cycle. There is NO CARRY on this TRUE ENTRY. 1-6U is left OFF, so, a 1AB pulse is entered into the units position of the MQ Unit and the trigger at 5-5G is turned ON.

Cycle 11 is a second TA reduction cycle. With 5-5G ON from cycle 10, no 7AB pulse reaches the TC trigger. It stays TRUE. There is NO CARRY on this TA. A 1AB pulse enters the units position of the MQ Unit and trigger 5-5G is turned ON.

Cycle 12. With 5-5G ON from cycle 11 the TC trigger remains TRUE. This TA attempted reduction ends in an overdraw (TA with CARRY). There is no 1AB pulse to enter the MQ Unit. Trigger 5-5G is left OFF.

Cycle 13. With 5-5G OFF, the 7AB pulse can pass through 5-7G and flip the TC trigger to complement. This becomes a correction cycle to return any remainder to the Counter. There is no MQ entry, and trigger 5-5G is left OFF.

Cycle 14 produces the divide end signal. With trigger 5-5G OFF from cycle 13 a 7AB pulse flows from the plate of 5-7G to return the TC trigger to TRUE. This in turn causes a pulse at about 7A time to flow from 5-11M and flip off the tertiary timer CS1 trigger on Figure 138. The resulting plus shift from the left plate of the CS1 trigger is converted to a pulse by the input capacitor of the power unit at 5-10K. A negative pulse flows from the plate of 5-10K at about 7A time. This turns off the divide trigger, 1-4Z (Figures 138 and 145), which in turn kills the Counter read-in voltage for the remainder of the cycle and restores the Counter carry-back circuits to the 9's complement system. The divisor rolls out of the Storage Unit on this last cycle but does not enter the Counter.

The multiply-divide trigger, 1-7V, is also turned off so the program ring can advance at 2AB of the following Primary Timer cycle. The normal 1AB restoring circuits for the TC trigger are also reactivated. The TC trigger will be pulled to complement at 1AB of this last division idle cycle.

The negative dividend trigger, 1-9S (Figure 147) is also turned off in preparation for any following division cycles.

Any remainder from the division calculation will be left standing in the Counter after the last division cycle. Since there is no automatic reset of the Counter, this remainder will be available for use on later programs if desired. Otherwise a wire to the CTR RO & R hub from a PROGRAM EXIT, following the division step, can be used to reset the Counter.

Division with a Negative Dividend (G & H)

Division with a negative dividend is illustrated cycle by cycle in Figure 148. The operation is very similar to division with a positive dividend already described. With a negative (TRUE FORM) dividend in the Counter, however, reduction attempts must be made as complement entries. For reduction cycles, which may turn out to be overdraw cycles, the TC trigger is set to COMPLEMENT. Correction cycles are made with the TC trigger set to TRUE. Successful reduction cycles are indicated by a carry out on a complement add cycle.

The set up for the first cycle of division with a negative (true) dividend must leave the TC trigger in the complement status where it was left by the plate-pull reset at 1AB of the preceding Primary Timer cycle. A "plus on No 9" input conditions the circuits to leave are indicated by a carry out on a complement add cycle.

H SUFFIX DIVISION CONTROL VOLTAGES WITH NEGATIVE DIVIDEND

OBJECTIVE: (Page 7-0201.) The control voltages for negative dividend operation are the same as for positive dividend operation except for a "+ on negative dividend" signal instead of a "+ on positive dividend" and the first cycle must be a CA operation instead of a TA operation.

1. PS-11 unit, 6E, conducts and turns on negative DD trigger, and it remains on until end of division. Negative dividend trigger left side output is inverted to become a "+ on Neg DD" and is fed to PS-25 unit, 3N, and IN-31 unit, $7D_2$. The latter turns on divide TC control trigger which conditions grid 2 of the PS-11 unit, 8D, page 8-0102, negative from 4A to 11A time and blocks pentagrid switch at 7AB time. TC trigger remains off (CA).

2. IN-6 unit, $7F_1$, conditioned positive from negative DD trigger, to block the "+ on positive DD" signal.

G SUFFIX DIVISION CONTROL VOLTAGES WITH NEGATIVE DIVIDEND

OBJECTIVES: All circuits are set up as discussed for a positive dividend. Besides this the negative dividend trigger, 1-9S (Figure 147), must be turned on to activate negative DD circuits. The TC trigger must be left in CA for the first cycle of the division. The divide TC control trigger, 5-5G, is turned on to do this by stopping a 7AB pulse from reaching the TC trigger.

1. (Figure 145.) With a negative dividend in the Counter, the "plus on No 9" input into grid 3 of the PS unit at 1-8T will be high.

2. When the divide trigger, 1-4Z, comes on at 3A a plus shift will be fed to the grid 1 input of 1-8T. The input capacitor to grid 1 of the tube will convert this to a 3A time pulse.

3. The 3A pulse from the plate of 1-8T will go to the right grid of the negative dividend trigger, 1-9S, on Figure 147, and turn it on. The trigger will stay ON until 7A during the last (idle) cycle of division.

4. When 1-9S comes on at about 3A, the negative output from the left plate cuts off the IN unit at $1\text{-}11U_1$. The resulting plus 3A shift from the plate of $1\text{-}11U_1$ goes through the capacitor input of the unit at $5\text{-}5J_2$ and produces a negative pulse from the plate.

5. The negative 3A time pulse from $5\text{-}5J_2$ plate pulls ON the division TC control trigger at 5-5G. This action will produce a negative level on grid 3 of the PS unit at 5-7G and block the 7AB pulse from the TC trigger, leaving it in complement status.

PROBLEM: $\frac{-1728}{144} = -12$

DD In Ctr
DS Assumed to be in FS2

CYCLE	OPERATION	COUNTER (DIVIDEND)	CTR. BALANCE	M - Q UNIT (QUOTIENT)
1.	Transfer DS (FS2) to Counter in CS5 Add "1" in units position (10A on CA) CA in CS5 Carry time (No 13th Order Carry Out) CA & NO CARRY (OVERDRAW)	1 7 2 8 1 9 9 9 9 9 9 8 5 5 9 9 9 9 9 9 9 9 9 8 5 5 0 6 1 8 1 1 1 9 9 9 9 9 9 8 5 6 1 7 2 8	Neg. Pos.	0 0 0 0 0 0 0 0 0 0
2.	Transfer DS to Counter in CS5 TA in CS5 Carry time (13th Order Carry Out) TA & CARRY (CORRECTION)	1 4 4 0 0 0 0 9 9 9 9 9 9 9 9 9 0 1 7 2 8 1 1 1 1 1 1 1 1 1 7 2 8	 Neg.	 0 0 0 0 0
3.	Transfer DS to Counter in CS4 Add "1" in units position CA in CS4 Carry time (No 13th Order Carry Out) CA & NO CARRY (OVERDRAW)	1 9 9 9 9 9 9 9 8 5 5 9 9 9 9 9 9 9 9 9 8 5 6 6 1 8 1 1 1 9 9 9 9 9 9 9 8 5 7 7 2 8	 Pos.	 0 0 0 0 0
4.	Transfer DS to Counter in CS4 TA in CS4 Carry time (13th Order Carry Out) TA & CARRY (CORRECTION)	1 4 4 0 0 0 9 9 9 9 9 9 9 9 9 1 7 2 8 1 1 1 1 1 1 1 1 1 1 7 2 8	 Neg.	 0 0 0 0 0
5.	Transfer DS to Counter in CS3 Add "1" in units position CA in CS3 Carry time (No 13th Order Carry Out) CA & NO CARRY (OVERDRAW)	1 9 9 9 9 9 9 9 9 8 5 5 9 9 9 9 9 9 9 9 9 9 8 6 2 1 8 1 1 1 9 9 9 9 9 9 9 9 8 7 3 2 8	 Pos.	 0 0 0 0 0
6.	Transfer DS to Counter in CS3 TA in CS3 Carry time (13th Order Carry Out) TA & CARRY (CORRECTION)	1 4 4 0 0 9 9 9 9 9 9 9 9 9 1 7 2 8 1 1 1 1 1 1 1 1 1 1 7 2 8	 Neg.	 0 0 0 0 0
7.	Transfer DS to Counter CS2 Add "1" in units position CA in CS2 Carry time (13th Order Carry Out) CA & CARRY (REDUCTION)	1 9 9 9 9 9 9 9 9 9 8 5 5 9 9 9 9 9 9 9 9 9 9 9 2 7 8 1 1 1 1 1 1 1 1 1 1 1 2 8 8	 Neg.	 0 0 0 1 0
8.	Transfer DS to Counter CS2 Add "1" in units position CA in CS2 Carry time (No 13th Order Carry Out) CA & NO CARRY (OVERDRAW)	1 9 9 9 9 9 9 9 9 9 8 5 5 9 9 9 9 9 9 9 9 9 9 8 7 3 8 1 1 9 9 9 9 9 9 9 9 9 8 8 4 8	 Pos.	 0 0 0 1 0
9.	Transfer DS to Counter in CS2 TA in CS2 Carry time (13th Order Carry Out) TA & CARRY (CORRECTION)	1 4 4 0 9 9 9 9 9 9 9 9 9 2 8 8 1 1 1 1 1 1 1 1 1 1 2 8 8	 Neg.	 0 0 0 1 0
10.	Transfer DS to Counter in CS1 Add "1" in units position CA in CS1 Carry time (13th Order Carry Out) CA & CARRY (REDUCTION)	1 9 9 9 9 9 9 9 9 9 9 8 5 5 9 9 9 9 9 9 9 9 9 9 0 3 4 1 1 1 1 1 1 1 1 1 1 1 1 1 4 4	 Neg.	 0 0 0 1 1
11.	Transfer DS to Counter in CS1 Add "1" in units position CA in CS1 Carry time (13th Order Carry Out) CA & CARRY (REDUCTION)	1 9 9 9 9 9 9 9 9 9 9 8 5 5 9 9 9 9 9 9 9 9 9 9 9 9 0 1 1 1 1 1 1 1 1 1 1 1 1 1 0 0 0 0 0 0 0 0 0 0 0 0 0	 Neg.	 0 0 0 1 2
12.	Transfer DS to Counter in CS1 Add "1" in units position CA in CS1 (No Carry) CA & NO CARRY (OVERDRAW)	1 9 9 9 9 9 9 9 9 9 9 8 5 5 9 9 9 9 9 9 9 9 9 9 8 5 6	 Pos.	 0 0 0 1 2
13.	Transfer DS to Counter in CS1 TA in CS1 Carry time (13th Order Carry Out) TA & CARRY (CORRECTION)	1 4 4 9 9 9 9 9 9 9 9 9 9 9 9 0 1 1 1 1 1 1 1 1 1 1 1 1 1 0 0 0 0 0 0 0 0 0 0 0 0 0	 Neg.	 0 0 0 1 2
14.	Shift out of CS1 End of Division (Idle Cycle)	0 0 0 0 0 0 0 0 0 0 0 0 0 (Any Remainder Will be Left in Counter)	Neg.	0 0 0 1 2

Figure 148. Division, Starting With a Negative Dividend

Cycle by Cycle With a Negative Dividend (G & H)

A cycle by cycle description of the negative dividend division operation illustrated by Figure 148 follows. This description is valid for both the H and the G suffix type of machine. Circuits for the H suffix operation are on *System* pages 7-0201 and 8-0102. For the G suffix, reference should be made to Figure 147.

Cycle 1. The division control voltages are established at 7A time. TC trigger left in COMPLEMENT. Shift to CS5 at 9A. Elusive 1 at 10A. COMPLEMENT ADD entry to Counter from Storage with NO CARRY. This indicates an overdraw cycle. No MQ Unit entry. Division TC control trigger left OFF.

Cycle 2. With Div TC Ctrl trigger OFF from preceding cycle, the TC trigger is changed to TRUE status at 7AB. This is a correction cycle. Dividend entered back into Counter in true form. TA with CARRY. No MQ entry. Div TC Ctrl trigger left OFF.

Cycle 3. With Div TC Ctrl trigger left OFF from preceding cycle, the TC trigger will be flipped to COMPLEMENT at 7A time. The return of the TC trigger to the reduction attempt (complement) status causes the tertiary timer to advance to CS4, also at about 7A. The elusive 1 and complement entry are made to the Counter. There is NO CARRY on this CA, indicating an overdraw. No MQ Unit entry. Div TC Ctrl trigger left OFF.

Cycle 4 is a TA correction cycle in the CS4 position. It is similar to cycle 2. No MQ entry. Div TC Ctrl trigger left OFF.

Cycle 5 is a column shift to CS3 and an attempted CA reduction cycle that ends in an overdraw similar to cycle 3. There is no MQ Unit entry. The Div TC Ctrl trigger is left OFF.

Cycle 6 is a TA correction cycle in the CS3 position, It is similar to cycle 2. No MQ entry and the Div TC Ctrl trigger is left OFF.

Cycle 7. Since the Div TC Ctrl trigger was left OFF from the preceding cycle, the TC trigger is flipped at 7A and returns to COMPLEMENT. The tertiary timer is advanced to CS2 by this action, also at about 7A. The 10's COMPLEMENT ENTRY to the Counter results in a CARRY out, signalling a reduction cycle. An entry is made to the second order of the MQ Unit at 1AB time and the Div TC Ctrl trigger is turned ON.

Cycle 8. Since the Div TC Ctrl trigger was left ON in the preceding cycle, the TC trigger is left unaltered (in its COMPLEMENT status) for this cycle. A second reduction attempt is made, but there is NO CARRY on this CA because an overdraw occurred. There is no entry to the MQ Unit and the Div TC Ctrl trigger is left OFF.

Cycle 9 is a TA correction cycle in CS2. It is similar to cycle 2. No MQ entry is made, and the Div TC Ctrl trigger is left OFF.

Cycle 10. The TC trigger is flipped and returns to COMPLEMENT status at 7A because Div TC Ctrl trigger was left OFF in the preceding cycle. The return of the TC trigger to the reduction cycle (complement) status at 7A advances the tertiary timer ring to the CS1 position. The 10's COMPLEMENT ADD with CARRY indicates a successful reduction. A 1AB enters the units position of the MQ Unit and turns on the Div TC Ctrl trigger.

Cycle 11 is a second CA reduction cycle in CS1. The TC trigger remains at COMPLEMENT. The 10's complement entry to the Counter (in this example) reduced the Counter to all zero's and gives a carry out. CA with CARRY indicates a successful reduction. A 1AB entry is made to the units position of the MQ Unit and the Div TC Ctrl trigger is turned ON.

Cycle 12 is a CA reduction attempt in CS1 that ends in an overdraw signalled by NO CARRY on the CA. It is similar to cycle 8. There is no entry to the MQ Unit and the Div TC Ctrl trigger is left OFF.

Cycle 13. Since the Div TC Ctrl trigger was left OFF in cycle 12, the TC trigger is flipped to TRUE at 7A. The TA entry to the Counter makes this a correction cycle to return any remainder to the Counter. There is no MQ entry and the Div TC Ctrl trigger is left OFF.

Cycle 14 is the end of divide (idle) cycle. When the TC trigger returns to COMPLEMENT at 7A, the tertiary timer CS1 trigger is flipped off to produce the 7A time end of divide pulse. This pulse returns all circuits to the normal, not dividing status as discussed under cycle 14 of the positive dividend operation. The divisor Storage Unit rolls out on this cycle, but there is no entry to the Counter. Note again that any remainder from the calculation will be left in the Counter for use as desired; there is no automatic resetting of the Counter to erase this figure. A CRO & R must be programmed on a following step if a zero balance Counter is needed.

MQ Sign Control When Dividing (G & H)

When dividing, the dividend in the Counter can be either positive (complement) or negative (true). There is a difference in the circuit action between these two possibilities, as was discussed in the preceding paragraphs. The divisor in the Storage Unit holding it may also be either positive or negative, though in either event the figure is stored in true form. A negative or positive dividend does not alter the dividing process, although it will be an element in determining the sign of the answer developed in the MQ. If both dividend and divisor are positive, the quotient will be positive. If either the dividend or the divisor is negative, the quotient will be negative. If both the dividend and the divisor are negative, the quotient will be positive. This is in accordance with the laws of algebra, and the machine must be made to indicate the sign according to these laws. In any event the quotient answer in the MQ Unit will be developed in true form. Only the status of the sign trigger must vary.

The MQ Unit sign trigger is reset to the plus (OFF) status with the MQ Unit during the first cycle of division (4A-8A for the H, 3A-8A for the G). "The first cycle of divide trigger" then conditions circuits to sent a 9AB pulse to the MQ Unit binary coupled sign trigger if the divisor (in Storage) is negative and to send an 11AB pulse if the dividend (in the Counter) is negative. If both divisor and dividend are negative, both pulses will reach the sign trigger. Once set in the first cycle, the MQ sign trigger does not change throughout the remainder of the division.

H SUFFIX CIRCUITS

OBJECTIVE: 9AB pulse to MQ sign trigger when the divisor in storage is negative at the start of division.

1. (Page 8-0103.) +(c) on first cycle of divide conditions PS-11 at 5E.

2. +9AB (c) on sign exit channel from $10Q_1$ drives 5E into conduction to turn on MQ sign trigger, 9G.

OBJECTIVE: 11AB pulse to MQ sign trigger when the dividend (in Counter) is negative at start of division.

1. Negative dividend switch, 6E, (page 7-0201) conducts on first cycle of division with No 9 (negative) in Counter.

2. Full output of PS-11 unit, 6E, is inverted by $4G_1$ (page 8-0103).

3. Positive output from $4G_1$ conditions 5G to pass 11AB pulse to flip MQ sign trigger, 9G.

Either pulse alone will cause the sign trigger to indicate negative. No pulses or both pulses will leave the

binary connected sign trigger indicating positive. This is in accordance with algebraic law.

G SUFFIX CIRCUITS

OBJECTIVE: 9AB pulse to MQ sign trigger when the divisor in storage is negative at the start of division.

1. (Figure 136.) Grid 3 of the PS unit at 3-9K is plus on the first cycle of division.

2. Grid 1 of 3-9K receives a plus 9AB pulse from the sign exit channel driver whenever a negative figure (the divisor) is rolled out from a Storage Unit). This pulse will turn on the MQ sign trigger, 5-9F.

OBJECTIVE: 11AB pulse to MQ sign trigger when the dividend in the Counter is negative at the start of division.

1. The 3-8K_2 half of the inverter switch is cut off on the first half of division.

2. The 3-8K_1 half of the inverter switch is cut off if there is a negative (No 9) dividend in the Counter.

3. Grid 3 of the PS unit at 5-9G is positive on the first cycle of division with a negative dividend. An 11AB pulse through unit flips the MQ sign trigger, 5-9F.

Either pulse alone will cause the sign trigger to indicate negative. No pulses or both pulses will leave the binary connected sign trigger indicating positive. This meets the requirements of algebra.

Division by Zero (G & H)

If the divisor is zero, the reduction cycle entries to the Counter will not reduce its balance. The calculator would therefore stay in "non-reducing" reduction cycles until the time allowed for calculating ran out at 12.7 on the 521 index. An unfinished program error would be indicated. The divide by zero circuits eliminate this possibility of hanging up. The divide by zero circuits also terminate the division operation if the arrangement of the divisor and the dividend would produce an answer larger than the five digit capacity of the MQ Unit.

The divide by zero circuits work on the principle that no more than nine MQ entry pulses will ever be made into any one MQ position if conditions are correct. If more than nine entries are made to the MQ Unit in CS5, the divisor is too small (or zero) to properly reduce the dividend in the time allowed or within the five digit capacity of the MQ Unit. The tenth division cycle entry pulse to the MQ Unit will then produce a 9 to 0 carry which will terminate the division and turn off the tertiary timer.

H SUFFIX CIRCUIT

The circuit for ending division when the divisor is zero (or if the dividend is erroneously placed in the Counter) appears on pages 7-0201 and 6-0201.

OBJECTIVE: To signal end of divide if there are more than 9 reduction cycles in CS5.

1. The + MQ carry signal from the circuit on page 7-0101 is inverted three times and at 1AB turns on the divide-by-zero trigger, 5H.

2. Divide-by-zero trigger is turned off at 9A of next electronic cycle.

3. Positive output of divide-by-zero trigger is inverted at 5J and turns off divide trigger, negative dividend trigger, and multiply-divide trigger (page 7-0101) to remove division control voltages.

4. Positive output of divide-by-zero trigger is also fed to tertiary timer, page 6-0201.

5. (Page 6-0201.) The "+ on divide by zero trigger off" signal is fed to 6J_1 and 6J_2.

6. Negative output from 6J_2 pulls off CS5 trigger.

7. Negative output of 6J_1 is used to keep CS4 off when CS5 is pulled off.

The PS-6 unit, 4H, page 7-0201, prevents any undesired MQ output on the first cycle of divide. This output is the result of the automatic reset of the MQ Unit and would affect the divide-by-zero circuit.

G SUFFIX CIRCUIT

OBJECTIVE: To signal end of divide if there are more than 9 reduction cycles in CS5.

1. (Figure 149.) The divide by zero switch at 3-7H is primed only during divide by the "plus on divide" input to grid 3.

2. If the MQ Unit position carries due to excessive 1AB entries, a minus 1AB pulse will be sent to the inverter at 3-7G_2.

3. The resulting plus 1AB into grid 1 of the PS unit at 3-7H causes a minus 1AB output to turn on the divide by zero trigger, 3-7D.

4. 5-2K_1, 5-2K_2, and 3-7E are capacitor input units which are biased beyond cutoff. The 1A negative shift from pin 8 of the divide by zero trigger, 3-7D, therefore produces no output action from these units.

5. When the divide by zero trigger is turned off at 9AB, it generates a positive shift which produces a negative 9A time pulse output from 5-2K_1, 5-2K_2 and 3-7E. The results of these pulse outputs are indicated by Figure 149.

When the MQ Unit is reset on the first cycle of divide, plus pulses can enter the inverter at 3-7G_2. To prevent these from signalling a false divide by zero, the inverter at 3-7G_1 is made to conduct during the first cycle of divide. This inverter switch action blocks the undesirable first cycle pulses from grid 1 of 3-7H.

MISCELLANEOUS ELECTRONIC CIRCUITS

THE CALCULATOR SELECTORS, Balance Test for Step Suppression, and Balance Test for Selector Pick-up circuits allow automatic variations to be made in the program step or punch operations.

The Electronic Digit Emitter, Half Adjust, and Zero Check circuits cause particular timed pulses to be placed on the number one exit channel.

Calculator Selectors (G & H)

The eight calculator selector relays are located on a small gate inside the machine tower, behind the external

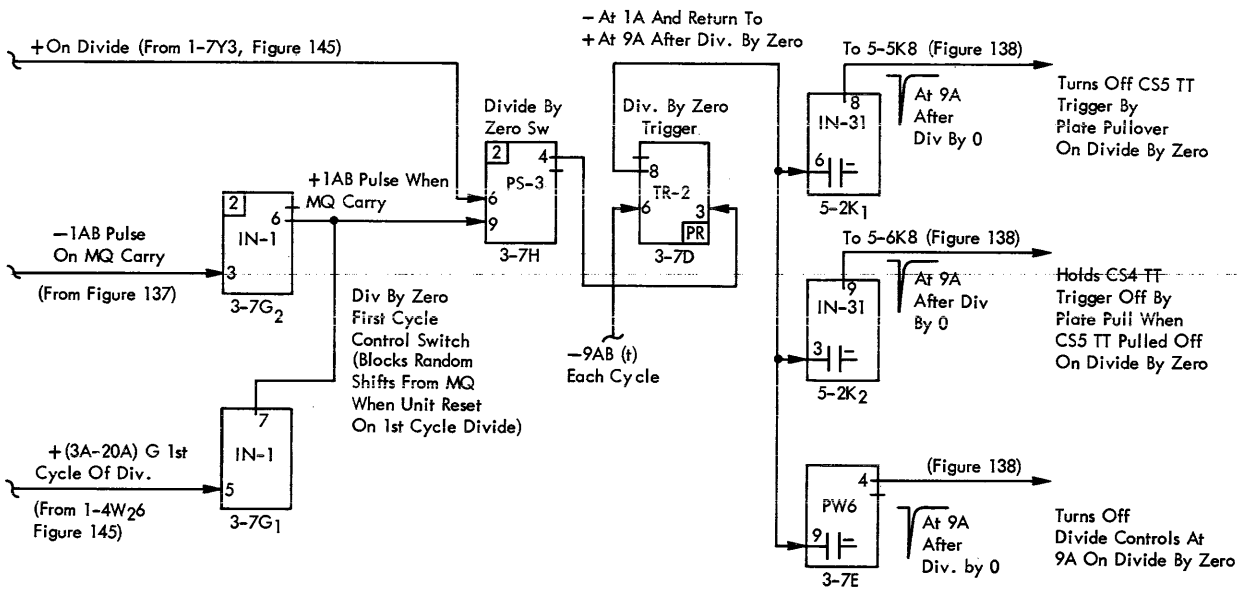

DIVIDE BY ZERO, G SUFFIX

Figure 149. Divide by Zero Circuit (G Suffix)

neon indicating panel. When facing the wiring side of the relay sockets, these separately controllable six-position relays are numbered from right to left. Each relay supplies five sets of transferring points. The circuit for the H and G machines is identical (*System* page 2-0302).

Calculator selector pick-up control "buffer" relays are located within the 521. Any impulse into a 521 panel CALCULATOR SELECTOR PU hub will cause the corresponding calculator selector relay within the 604 to pick prior to 13.0 when calculating begins. The transferred relays drop at 0.0, after calculations have been completed. The "buffer" relays in the 521 prevent any accidental selector relay pick-up midway through a calculation.

PROGRAM EXITS can be wired through calculator selectors to cause variations in the calculating steps for different types of cards. Use of the different types of PROGRAM SUPPRESS hubs through calculator selectors gives further flexibility.

Suppress Without Balance Test (G & H)

These hubs emit a constant voltage of the proper level to be acceptable by the PROGRAM SUPPRESS hubs on the 604 control panel. Impulsing a PROGRAM SUPPRESS hub eliminates any output shift from the corresponding PROGRAM EXIT hubs during the time alloted for that program. (A suppressed program takes one Primary Timer cycle regardless of what is wired from the corresponding PROGRAM EXIT hubs.)

The H suffix SUPPRESS WITHOUT BALANCE TEST hubs emit a constant plus 25 volt level from the output of a cathode follower at 5-11G. The tube unit is used merely to set a constant level.

The G suffix SUPPRESS WITHOUT BALANCE TEST hubs emit a constant plus 150 volts. This potential is obtained from the plus 150 volt DC supply through a 1,000 ohm 5 watt limiting resistor and a 1/16 amp fuse. The components are external to any pluggable units. They are connected to and located near inter-panel connector 1-Yd.

Balance Test for Step Suppression (G & H)

The balance test for step suppression circuit is used to test the Counter for the sign of its balance. After the BALANCE TEST FOR STEP SUPPRESSION hub has been programmed, either the SUPPRESS ON PLUS BALANCE or SUPPRESS ON MINUS BALANCE hubs will shift to an active output level which can then be used to suppress undesired program steps which follow. Both sets of BALANCE TEST hubs are at an inactive level at the start of any calculation. After the first balance test, however, one or the other set will be active throughout the remainder of the calculation. The sign of the Counter bal-

ance may be tested as often as desired in any calculation. The EXIT hubs will reflect the Counter status at the last tested program step.

Balance test is made at the very end of any Primary Timer cycle. The BALANCE TEST FOR STEP SUPPRESSION hub can be wired on the same program step as any other 604 operation (including multiplication and division).

H SUFFIX CIRCUITS

POSITIVE BALANCE

OBJECTIVE: (Page 8-0201.) Program balance test for step suppression to test the Counter balance and activate SUPPRESS ON PLUS BALANCE hubs.

1. PS-11 unit, 9H, conducts at 23AB time to reset OFF the positive balance trigger and negative balance trigger.

2. PS-12 unit, 8H, conducts at 1B time. Output is inverted and fed to 9J and 9K.

3. Positive balance trigger turns on at 1B time when Counter balance is positive.

4. Output of positive balance trigger is fed through CF-11 unit to SUPPRESS ON PLUS BALANCE hubs.

NEGATIVE BALANCE

OBJECTIVE: (Page 8-0201.) Program balance test for step suppression to test the Counter balance and activate SUPPRESS ON MINUS BALANCE hubs.

1. Same as positive balance.

2. Same as positive balance.

3. Negative balance trigger turns on at 1B time if Counter balance is negative.

4. Output of negative balance trigger is fed through CF-11 unit to SUPPRESS ON MINUS BALANCE hubs.

G SUFFIX CIRCUITS

OBJECTIVES: To shift to the plus 150 volt level either the SUPPRESS ON PLUS BALANCE or the SUPPRESS ON MINUS BALANCE hubs under control of Counter on balance test for step suppression program.

1. At the start of any calculation both PW units 1-7P and 1-8P are conducting because both triggers 1-7Q and 1-8Q have been Punch time Reset OFF. The EXIT hub level will be less than plus 50 volts.

2. On a Balance Test for Step Suppression program, 1-8W_1 is cut off and produces a plus potential on grid 3 of 1-9Q and 1-9R.

3. At 23AB 1-9Q will conduct and send a minus pulse to both balance triggers to turn them off. On the first such test of any calculation this pulse has no effect, but after the first test one or the other of these triggers will be on until this 23AB pulse arrives.

4. At 1B, the very end of the program step, 1-9R, is made to conduct and send a minus pulse to 1-4R_2 which inverts it to a plus 1B.

5. Grid 3 of 1-6R or 1-7R only will be primed from the 9-No 9, Counter balance indicating circuit. If the balance is minus (No 9), 1-7R will conduct when fed the plus 1B pulse from 1-4R_2 and turn on the minus balance trigger, 1-8Q. The power unit at 1-8P will be cut off and produce the desired plus 150 volt level from the SUPPRESS ON MINUS BALANCE hubs.

6. If the Counter has a plus (9) balance, 1-6R will conduct at 1B and turn on the plus balance trigger, 1-7Q, to cut off the power unit at 1-7P and produce the desired plus 150 volt level from the SUPPRESS ON PLUS BALANCE hubs.

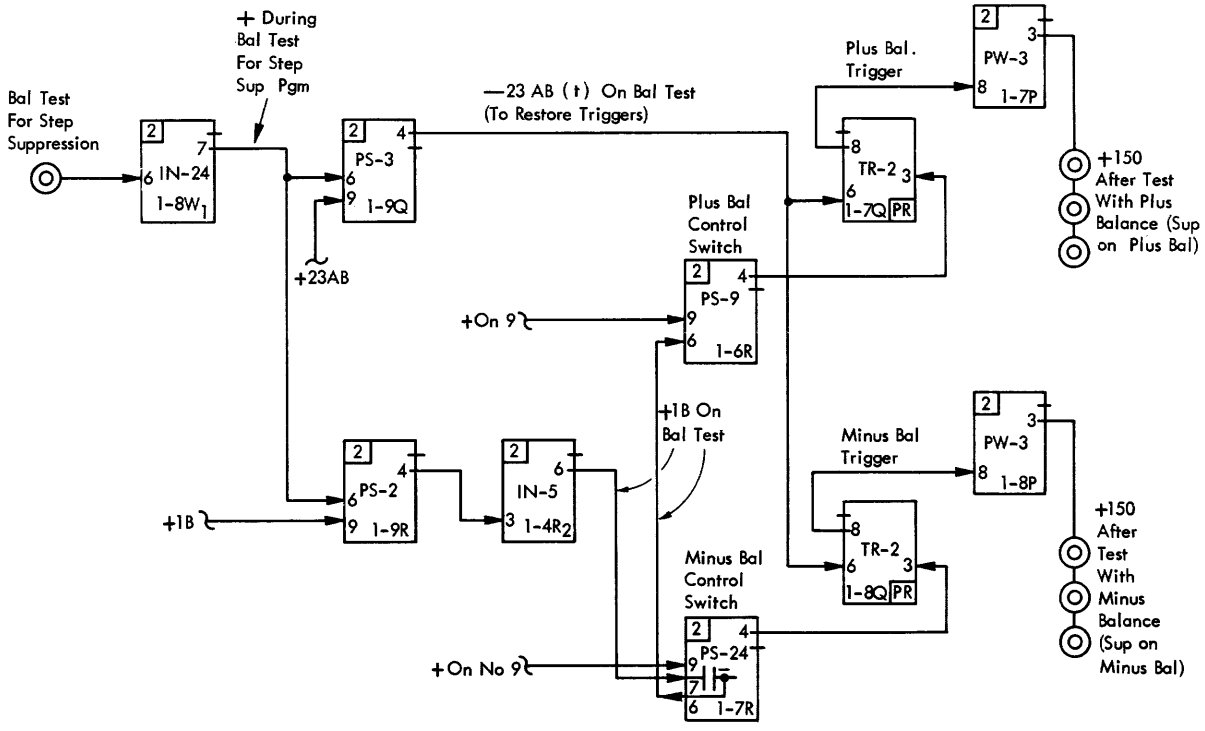

Balance Test For Step Suppression, G Suffix

Figure 150. Balance Test for Step Suppression (G Suffix)

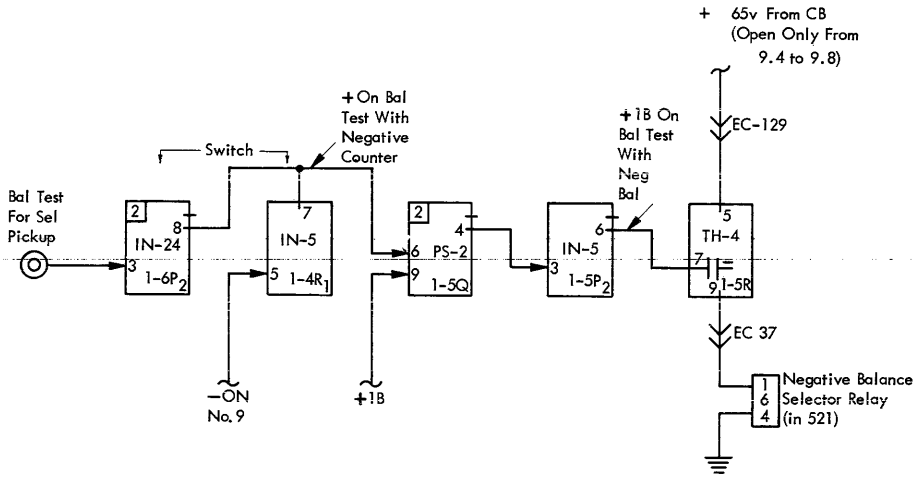

Figure 151. Balance Test for Selector Pick-up (G Suffix)

7. The trigger status and output hub levels remain unchanged until the end of any following balance test for program suppress step or until reset during punch time.

Balance Test for Selector Pick-up (G & H)

The calculator is normally equipped with one negative balance selector. The relay is in the 521 and the wiring to the transferring points comes out on the 521 panel. The circuits to control the picking of this relay, however, are in the 604 and controlled by the 604 control panel. Any desired program step or steps (except those being used for multiplication or division) can be wired to the BALANCE TEST FOR SELECTOR PICK-UP hub on the 604 panel. The testing occurs at the very end of the cycle and is controlled by the balance at that time. If any one (or more) of the tested steps finds the Counter balance negative, the selector will be transferred during the entire immediately following punch cycle. NOTE: It is any tested step having a negative balance, not the status of the last tested step, that will cause the pick of the selector.

H SUFFIX CIRCUITS

OBJECTIVE: (Page 8-0201.) To program balance test for selector pickup and energize the selector if the Counter balance is negative.

1. PS-12 unit, 11A, conducts at 1B time when balance test for selector pickup is programmed and Counter contains a negative balance (No 9).

2. PS-12 unit output is inverted and negative balance selector thyratron conducts to energize negative balance selector in the 521.

3. Thyratron continues to conduct and keep relay 164 energized as long as +65v plate supply is available through P71 (M9.8-B9.4).

G SUFFIX CIRCUITS

OBJECTIVE: (Figure 151.) To pick up the negative balance selector relay if the Counter is negative on a Balance Test for Selector Pick-up program.

1. 1-6P_2 half of inverter switch is cut off on Balance Test for Selector Pick-up program.

2. 1-4R_1 half of inverter switch is cut off only when Counter is negative (No 9).

3. Combined plate output of inverter switch makes grid 3 of PS-2 at 1-5Q plus only on test program with negative Counter. Grid 1 receives plus 1B each cycle.

4. Minus 1B from plate of 1-5Q only on test program with negative balance is inverted to plus 1B by 1-5P_2. This pulse is applied to thyratron unit.

5. Thyratron fires and energizes negative balance selector relay until CB in plate circuit opens at 9.4, the end of the punch cycle following the calculation.

Electronic Digit Emitter (G & H)

The electronic digit emitter circuits make it possible from a control panel instruction to place a timed pulse on the number 1 exit channel. The time of this pulse is varied depending on the emitted digit desired. The results of this pulse at the receiving unit (Storage or Counter) told to read in on the same program step are the same as though the number were being transferred from any previously discussed sending unit. By controlling the column shift on the same program step as the electronic emitter, the emitted digit can be entered into any of the six low order positions of the Counter or a Storage Unit within its capacity.

Only one digit can be emitted on any one program. Since Storage Units reset on each read-in, only a single digit with a plus sign can ever be developed in them directly from the electronic emitter. Multiple digit plus or minus numbers can, however, be developed in the Counter by successive entries and then, if desired, transferred to a Storage Unit.

The H suffix circuit is given on *System* page 8-0204. Figure 152 provides the circuit for the G suffix and

earlier machines. The heart of the circuit is the nine PS units sharing a common plate load (only one of the units is directly supplied with plus 150 volt plate potential). One grid of each PS unit receives an AB pulse each cycle. The time of the AB pulse is different for each PS unit. Control panel wiring is used to make the other grid of one of the PS units go positive during the desired program step. The result is an AB pulse of selected time down the number one exit channel during the desired program. The leading edge time of the AB pulse corresponds quite closely to the time that a 9 to 0 carry shift would occur from a Storage Unit reading out the same digit as that being electronically emitted; the extra duration of the emitter controlled AB pulse has no effect.

On the G suffix circuit (Figure 152) the double inverter at 1-11$N_{1 \text{ and } 2}$ is used only to isolate the number one exit channel from the loading of the eleven tubes feeding 1-11N_2.

Half Adjust (G & H)

Half adjust is used to round out to the nearest whole number any figure held in the Counter. The circuit is designed to put a "transfer of a five" pulse on the number one exit channel (very similar to an emit 5). This five is entered into the Counter in plus (complement) form if the Counter balance is plus or in minus (true) form if the Counter balance is minus. In this way the Counter advances to the nearest whole number furthest away from zero, which is the desired effect. By means of the control panel shift controls, the half adjust 5 can be entered into any one of the six low order positions of the Counter, adjusting to the nearest dime, dollar, etc., as desired. The entry is controlled to go into the next lower order position than the level to be kept. The following examples show minus and plus half adjustments to the nearest dollar (the two low order positions are dropped out on subsequent transfers or in punching out):

Half Adjustment with Negative Balance

```
  1 7 2 8 4 5. 8 7
      +        5
  ----------------
  1 7 2 8 4 6. 3 7
```

Half Adjustment with Positive Balance

```
    9999827154.12
+ 9999999999.49
  ----------------
    9999827153.52
```

Counter Read-In is automatic when a half adjust is programmed. There are therefore three phases to the half adjust circuit: 1) emit five, 2) properly set the TC trigger, and 3) give an automatic Counter read-in control.

H SUFFIX CIRCUITS

OBJECTIVE: (Pages 8-0102 and 8-0204.) To add a 5 into the Counter when half adjust is programmed.

1. (Page 8-0204.) Half adjust program wiring conditions switch units 2E and 2B and is inverted at $3H_2$ and $2J_1$ (4-0401) to develop Counter read-in voltage.

2. If the Counter is negative, +(c) on No 9 conditions one grid of the PS-12 unit, 2E; the other grid is conditioned by the half adjust signal.

3. The output from 2E is inverted and fed through a CF-5 unit to the TC trigger control circuits, page 8-0102.

4. (Page 8-0102.) The half adjust signal mixes with a 7AB pulse at the PS-11 unit, 8D, turning the TC trigger on (TA).

5. (Page 8-0204.) One grid of the PS-40 unit, 2B, is conditioned by the half adjust signal; the other grid gets a +15AB pulse.

6. The output from 2B, a -15AB pulse is inverted and fed through a CF-5 unit to exit channel 1.

If the Counter is positive, steps 2, 3, and 4 are eliminated and the TC trigger remains OFF (CA).

G SUFFIX CIRCUIT

OBJECTIVES: (Figure 152.) 15AB pulse on exit channel 1. Counter read-in voltage developed. 9AB to TC trigger if Counter negative (No 9). Circuits to be activated only when half adjust programmed.

1. Minus shift into half adjust hub cuts off both halves of IN-35 unit at 1-7$U_{1 \text{ and } 2}$.

2. Plus output from 1-7U_1 pin 7 primes PS-2 at 1-7T to pass 15AB pulse. This pulse appears on exit channel 1 as a minus 15AB.

3. Plus output from pin 7 of 1-7U_1 also goes to 1-9T_2 (Figure 121) of the Counter Read-In control circuits to prime Counter to accept entry channel pulses.

4. The second half of 1-7U is cut off during the half adjust program. Together with 1-8S_2 this forms an inverter switch. 1-8S_2 is cut off only when the Counter is negative by a "minus on No 9" output from 9-No 9 circuit (Figure 122). The combined plate line thus goes plus only on a half adjust with a negative Counter.

5. The output from 1-7U_2 and 1-8S_2 primes a TC trigger control switch, 1-7S (Figure 124), to pass a 9AB to flip the TC trigger to TRUE during the half adjust entry to the Counter only if the Counter is negative. With a positive Counter, the TC trigger stays, as reset, in COMPLEMENT.

Zero Check (G & H)

The zero check circuit permits the Counter to be checked for a zero balance and is useful for checking the accuracy of calculations. If the same problem is done twice (preferably in a different manner, using different machine units), subtracting one result from the other will give a zero balance in the Counter unless some error occurred.

The zero check is made by entering a 19B pulse into the Counter from the Add-Subtract Unit (by setting up a subtract 1 operation). If the Counter holds a zero balance, it will be standing at all nines, and the 19B

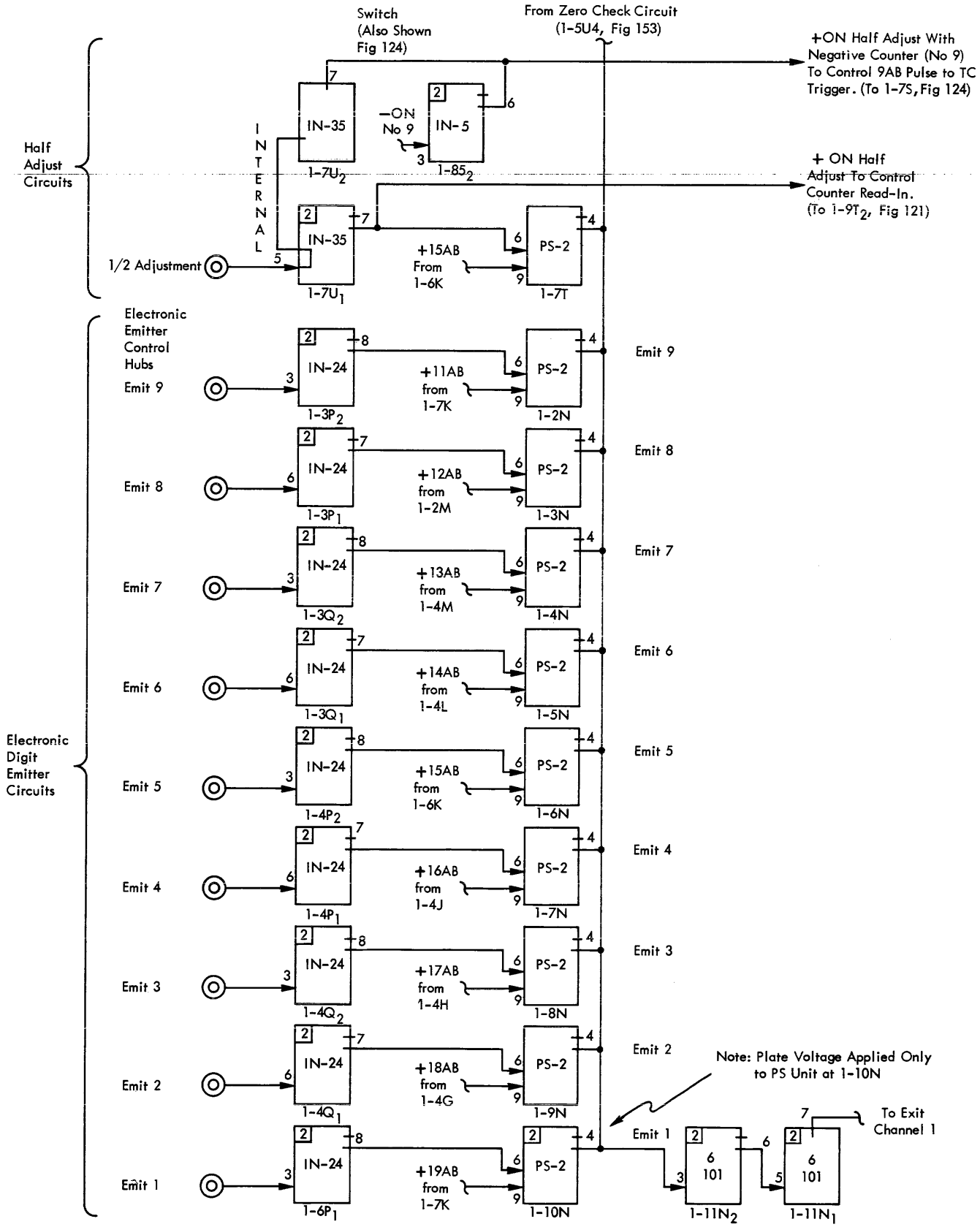

Figure 152. Electronic Digit Emitter and Half Adjust Circuits (G Suffix)

pulse will cause a carry out from the 13th order. This carry out is sensed by the zero check circuits. No carry out indicates a non-zero condition.

By using the pluggable Column Shift controls, the 19B pulse may be entered into any one of the six low order positions of the Counter. In this way the Counter need not be completely at zero but may still be checked for a zero balance to the nearest dime or dollar, etc.

Wherever a zero balance is expected in the Counter, a zero check may be programmed. As many steps as desired may be zero checked, but nothing else (except a column shift where desired) may be programmed on the same step. If *any one* of the tested steps is non-zero, a relay will be picked in the 521 to activate the ZERO CHECK exit hubs on the punch control panel. The output from these exit hubs can be wired to cause the machine to stop and turn on the 521 ZERO CHECK error light. (For Customer Engineering test purposes it is also possible to make a non-zero condition stop the Primary Timer and all further calculating at the end of the zero check program.)

The results of a division operation may be checked for the presence of a remainder by the zero check circuit. After an even division which started with a negative dividend, however, the Counter will be standing at all zeros (rather than nines). Such a "negative zero balance" cannot be tested by the normal 604 zero check circuit, but it can be converted to a plus zero by wiring COUNTER READ-IN PLUS (alone) from a program step between the division and the zero check. This will add nine pulses to each Counter position.

A zero check program entails a Counter entry which alters the figure in the Counter. The circuit has therefore been designed to automatically reset the Counter from 3A to 8B of the program step following a zero check.

The ZERO CHECK entry hub causes five actions: 1) The Counter read-in switches are primed; 2) the TC trigger is set to TRUE; 3) an emit 1 pulse is sent to exit channel 1; 4) the zero check relay is picked in the 521 if there is a non-zero condition signalled by no 13th order carry out; and 5) a Counter reset is activated from 3A to 8B of the following Primary Timer cycle.

H SUFFIX CIRCUITS

OBJECTIVE: Counter read-in on Zero Check.

1. Plus (c) into ZERO CHECK hub (Page 8-0203) causes IN-6 at $11J_2$ to conduct. Output goes to page 4-0401 where $2J_1$ into 3J sends "plus (c) on Ctr RI" to Counter read-in switches, page 4-0101.

OBJECTIVE: Set TC trigger to TRUE.

2. (Page 8-0102.) Zero-check control-panel voltage from page 8-0203 conditions one grid of the PS-11 unit, 8G; the other grid receives a +5AB pulse.

3. PS-11 unit, 8G, conducts at 5AB and turns TC trigger on (TA operation).

OBJECTIVE: Emit 1 type of pulse (19AB) on exit channel 1.

4. (Page 8-0203.) One grid of the PS-40 unit, 2A, is conditioned by zero check control panel wiring; the other grid receives a 19AB pulse.

5. The output of 2A, a -19AB pulse on zero check, is sent to page 8-0204, inverted, and fed to exit channel 1.

OBJECTIVE: Pick zero check relay on non-zero (no 13th order carry).

6. If the Counter was non-zero, a -1AB on TA and no-carry pulse is developed on page 7-0201 as described under "division."

7. (Page 8-0203.) The -1AB pulse inverted to condition one grid of the PS-6 unit, 8J; the other grid is conditioned by the zero-check control-panel voltage.

8. The output of 8J, inverted, fires the thyratron at 7G. The thyratron output is sent to the punch through EC66.

9. (6B, WD222301M.) EC66 to pick the zero check relay, R34.

OBJECTIVE: Set up for Counter Reset next cycle.

10. (Page 4-0201.) The zero check voltage from page 8-0203 is mixed with a 23AB pulse at the PS-8 unit, 6K.

11. The output of 6K turns on the Counter reset trigger by plate pullover.

G SUFFIX CIRCUITS

OBJECTIVE: Counter Read-In on Zero Check.

1. (Figure 153.) Lowered input level into $1\text{-}6S_2$ from active Program Exit to ZERO CHECK hub produces "plus during zero check" level into $1\text{-}6Q_1$. After triple inversion this produces from $1\text{-}9X_1$ a "minus for Ctr RI" level which goes to 1-9U (Figure 121 to activate Ctr RI circuits).

OBJECTIVE: Set TC trigger to TRUE.

2. (Figure 153.) "Plus during zero check or Ctr RI minus" input into PS-2 unit at 5-1J primes unit to pass 7AB pulse to TC trigger circuits (Figure 124). Trigger flipped to TRUE.

OBJECTIVE: Emit 1 type of pulse (19AB) on exit channel 1.

3. "Plus during zero check program" input to grid 3 of PS-2 at 1-5U (Figure 153), primes the switch to pass a 19AB pulse to $1\text{-}11N_2$ on Figure 152. A minus 19AB pulse appears on exit channel one.

OBJECTIVE: Pick zero check relay on non-zero (no 13th order carry).

4. The PS-2 unit at 1-6T is primed on grid 3 during zero check to pass any entry on its number 1 grid.

5. If there is no 13th order carry pulse within the 20B to 1A time allowed, the trigger at 1-6U will stay OFF. The low output from pin 7 will cut off $1\text{-}2P_2$, the right half of an inverter switch. $1\text{-}2P_1$ is cut off at 1AB of each cycle. With 1-6U OFF, a plus 1AB will feed from the combined plates of the inverter switch to grid 1 of the PS-2 unit at 1-6T.

6. The minus 1AB pulse from the plate of 1-6T is inverted to a plus pulse which fires the thyratron at 1-5T.

7. Relay 34 in the 521 is picked through EC66 and will be held until 9.4 when the plus 65 volt control thyratron hold potential is removed briefly (for 4 teeth).

OBJECTIVE: Counter Reset next cycle.

8. $1\text{-}6S_1$ and $1\text{-}5S_1$ form an inverter switch. $1\text{-}6S_1$ is cut off by the zero check program input. $1\text{-}5S_1$ is cut off at 1B each cycle. A plus 1B pulse is inverted and sent to the TR-2 unit at 1-11X at the end of the zero check program. The Counter reset trigger is thus turned on at 1B.

9. The trigger at 1-11X will stay ON until 11A of the following cycle, cutting off $1\text{-}11W_2$. The $1\text{-}11W_1$ half of this inverter switch is cut off from 3A to 8B, producing a plus reset gate for the Counter from the combined plates.

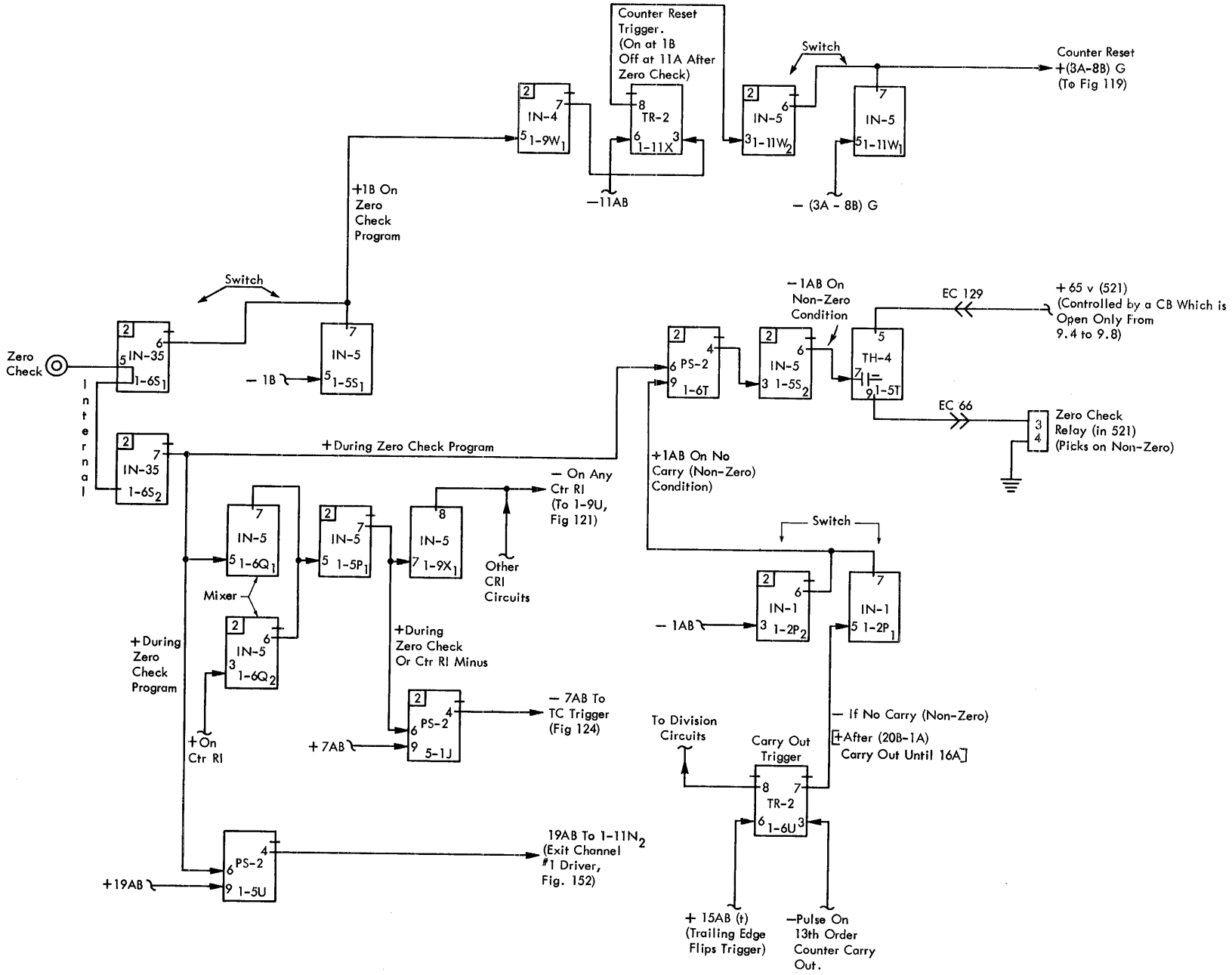

Figure 153. Zero Check Circuits (G Suffix)

Power Supply

THE 604 CALCULATING CIRCUITS require five well filtered, non-varying DC voltages and a steady source of six volts AC for the tube heaters. It is the function of the power supply to provide these voltages while meeting certain other requirements. The input power supplied to the machine must be within the range of 190 to 230 volts, 60 cycles, single phase. The attachment cord has a standard, three prong grounded range plug on the free end.

The performance specifications for the 604 power supply, type 546, are as follows:

1. Plus 150 volts at 8 amperes. Excellent regulation. Peak to peak ripple (measured with an oscilloscope) not to exceed 4 volts.

2. Plus 75 volts at 1 ampere. Regulation only fair (fluctuations can be seen while punch is running). Peak to peak ripple not to exceed 4 volts.

3. Minus 100 volts at 2.5 amperes. Excellent regulation. Must be variable plus or minus 15 volts for testing purposes. Peak to peak ripple not to exceed 3 volts.

4. Minus 175 volts at 250 milliamperes. Excellent regulation. Peak to peak ripple not to exceed 5 volts.

5. Minus 250 volts at 50 milliamperes. Good regulation. Must be variable plus or minus 25 volts for testing purposes. Peak to peak ripple not to exceed 4 volts.

6. Six volt heater supply (AC). Over 200 amperes steady current available. Good regulation. Must be variable to permit exact setting. (With power supply design used, adjustment of heater voltage also varies the plus 150 volt, plus 75 volt, and minus 175 volts outputs. Minus 100 volt and minus 250 volt outputs also vary, but can be separately adjusted. In manufacture the transformers are matched so desired DC outputs are obtained with desired AC heater voltage level.)

7. A regulating circuit must be included to supply a steady, Controlled Voltage AC input to the power supply transformers. Plus or minus ten percent supply line input variations must be compensated to within less than one percent variation on the Controlled Voltage line.

8. A detecting circuit must be included (called the HI-LO circuit) to shut off the machine if the Controlled Voltage line shifts too high or too low (as it might with a failure in the regulator or with excessive input supply variations). The circuit is arranged for added safety so a failure in the HI-LO will also shut off the machine.

9. A manually set transformer is included to provide a rough voltage of 210 volts into the regulator (buck-boost) transformer with source inputs of from 190 to 230 volts. A 110 volt convenience outlet is also fed from this transformer.

Figure 154 shows the general layout of the 604 power supply which meets the requirements stated above. Figure 155 shows a typical DC power supply ripple pattern. Figure 10 gives a good view of the physical construction of the power supply. Identification of the major components of this supply can be obtained from the diagrams on *System* page 0-0800.

GENERAL OPERATION

THE FOLLOWING DESCRIPTION of power supply operations should be read for general design understanding as given by Figure 155, and then related to the power supply wiring diagram. Pages 0-0800, 0-0801, and 0-0802 in the 604H *System Diagrams* book are very similar to *Wiring Diagram* 303600 used with the G and earlier machines. No difficulty should be experienced going from one to the other.

When the 604 power cord is plugged into a source of power, transformer T-703 immediately activates the 110 volt convenience outlet. T-703 also has taps on its primary winding which allow it to be used as a voltage setting auto-transformer. These taps are manually set (in the manner indicated by the notes on the power supply print) to the 190, 210, or 230 volt connections nearest to the voltage level supplied from the power line. The line voltage level can be determined from the AC meter mounted inside the 604 tower; the meter range

switch must be set to LINE. **The power cord must be disconnected from the power outlet while making any changes in the transformer connections.** When the taps are properly set, T-703 will supply 210 volts (plus or minus 10) to the 521 power cord receptacle (which is energized as long as the 604 attachment cord is plugged into an active outlet) and to the master AC circuit breaker (which controls the application of power to the 604 power supplies).

When the 604 POWER ON key is depressed, the master circuit breaker is magnetically closed. This starts the blower motors and supplies power to the buck-boost

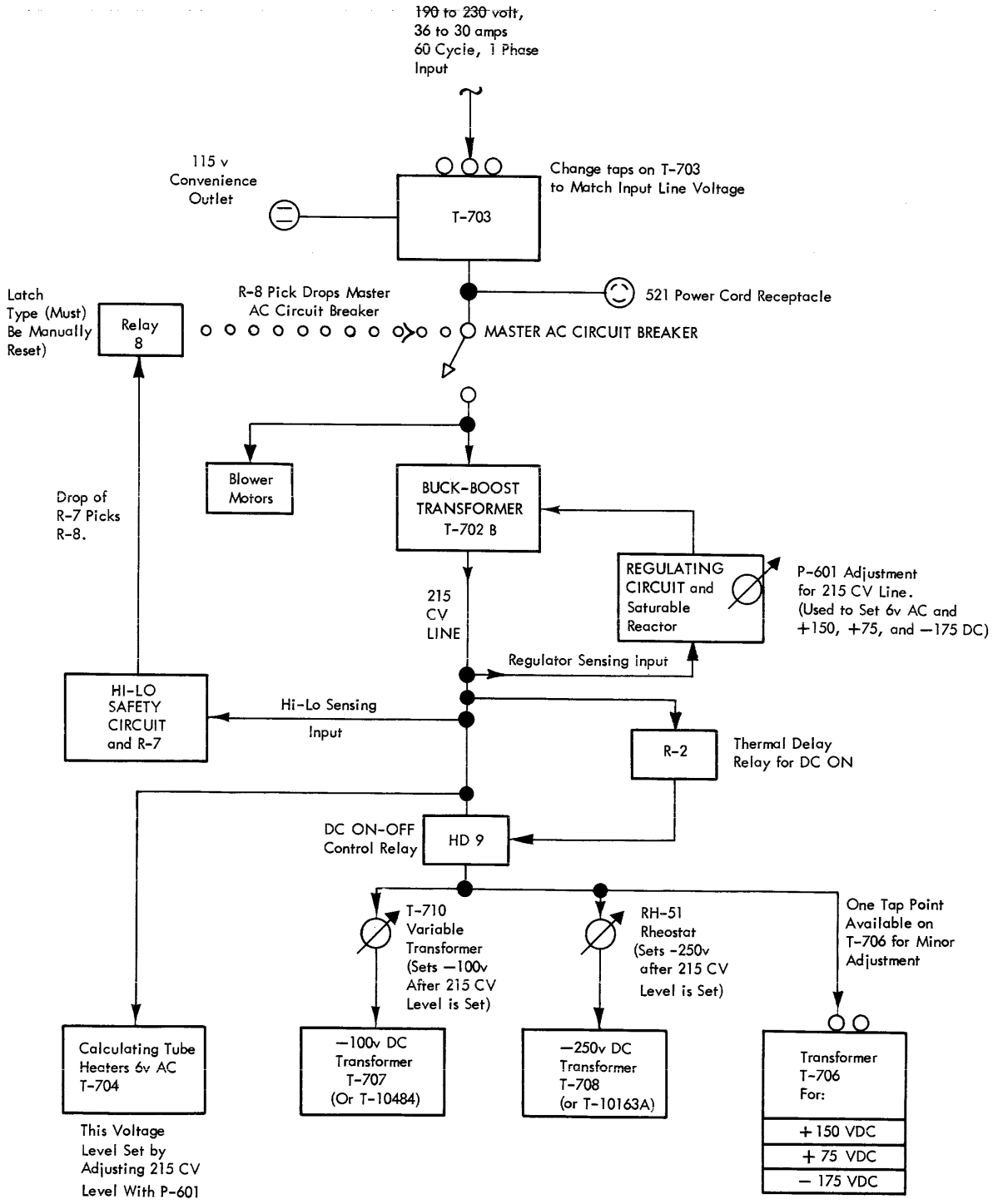

Figure 154. The 604 Power Supply Organization

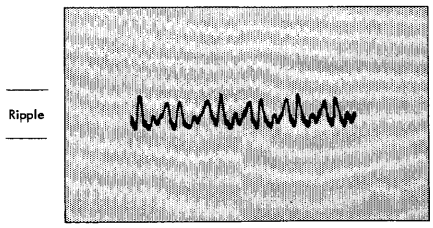

Figure 155. Typical Ripple Pattern Seen on DC Supplies

regulator transformer, T-702. The output voltage level from the buck-boost transformer is controlled by a regulator circuit which will be described later. Until the tubes in the regulator circuit become heated, the output of the buck-boost (labelled the 215 CV line) will be only about 160 volts. The AC voltage applied to the heaters of the calculator tubes during this time will be near 4.5 volts, providing a desirably slow warm-up period for some thirty seconds. As all the tubes in the 604, the power supply, and the regulator heat-up, the buck-boost output will slowly rise until the 215 CV line reaches its normal level near 210 volts. Watching the AC meter within the 604 tower during the warm-up period, with the meter range switch set to read the 6 volt filament transformer output, can provide important clues to the failing area if trouble develops in either the regulator circuit or the HI-LO circuit. The voltage versus time chart of Figure 156 shows the normal action to be expected. Times will vary with tube age and should be considered approximate. The initial rise, the plateau, and the final rise to the correct level plateau before the pick of R2 are the important areas to note.

While the tubes are being heated it is desirable that no plate voltage be applied to them. This is accomplished by Heavy Duty Relay 9 and thermal relay 2. Until HD9 picks up, no AC input power is supplied to the Calculator DC power supply plate transformers. Relay 9 is energized when relay 2 picks. The thermal contact on relay 2 should be adjusted to provide about a 2.5 minute delay before DC comes on.

Relay HD9 is dropped to kill DC whenever the 604 Control Panel is removed or when the DC OFF toggle switch within the 604 tower is turned to OFF. Once picked R2 is held until the 604 is turned off. Therefore, after the initial 2½ minute warm up delay, HD9 picks

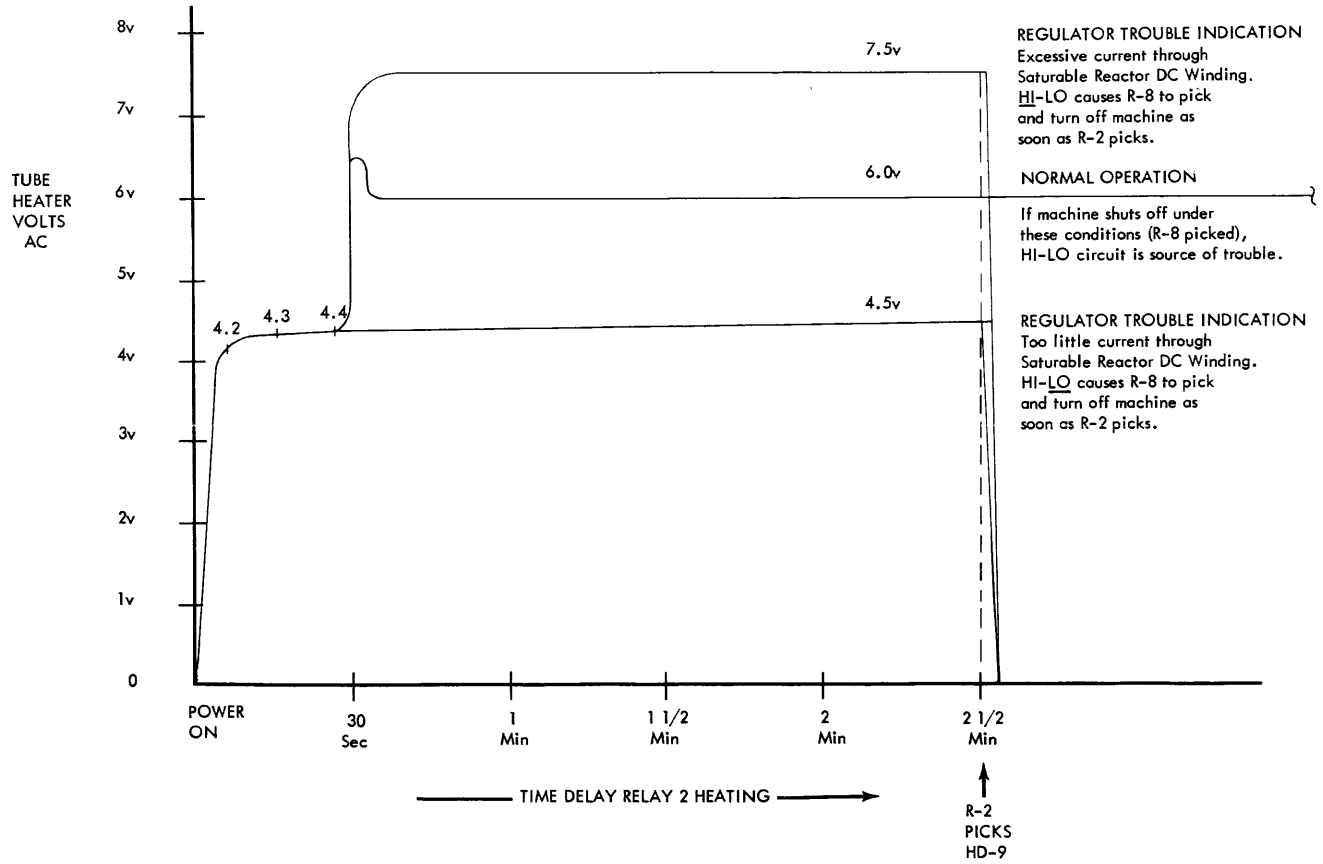

Figure 156. Warm-Up Characteristics of the 604

instantly when the 604 Control Panel is closed or the DC switch turned ON.

The level of the 215 CV line is adjusted by potentiometer P601 in the regulator circuit to set the calculator tube heater voltage to the specified level. This varies all the DC voltages in the machine as well, but the critical minus 100 volt supply, and the minus 250 volt supply, have separate adjustments. In manufacture the machine is matched so the plus 150, plus 75, and minus 175 volt DC outputs are reached when the heater voltage level is correct. Minor compromises are occasionally necessary. The plus 150 should be set exactly unless the heater voltage cannot simultaneously be set within plus or minus .1 volt of specifications. A single tap available on the primary winding of T-706 can be used to alter slightly the three DC voltages controlled from this transformer (the plus 75 and minus 175 volts are not particularly critical). After the 215 CV line has been properly set, the variable transformer T-710 is adjusted to set the minus 100 volt line to that exact level. The RH-51 rheostat is similarly set to control the minus 250 volt output. P-601, T-710, and RH-51 are screwdriver adjustable from within the 604 tower.

The HI-LO circuit is quite similar to the regulator circuit but has as its objective the constant energization of relay 7. If relay 7 drops, the latch type relay 8 will be picked which will in turn drop out the master AC circuit breaker. When once picked, the cover must be removed from the power supply to enable R8 to be manually reset. The physical arrangement is designed this way because R8 should not pick unless something is wrong. If something is wrong, a Customer Engineer should be called to investigate before damage is done to the machine.

The HI-LO circuit will keep R7 energized as long as the 215 CV line is within the range that will cause the calculator tube heater voltage to be within plus or minus three tenths of a volt of the specified level. Two potentiometers within the HI-LO circuit (P602 and P603) are manually adjusted to center the HI-LO circuit action within these values. As indicated by Figure 156, a failure in either the HI-LO or the regulator circuit will shut off the machine as soon as time delay thermal relay 2 picks. Use of the chart and an observation of the heater voltage during warm-up will indicate the area of probable failure. Replacement (not interchange) of tubes one by one in the indicated circuit should be the first step in case of trouble.

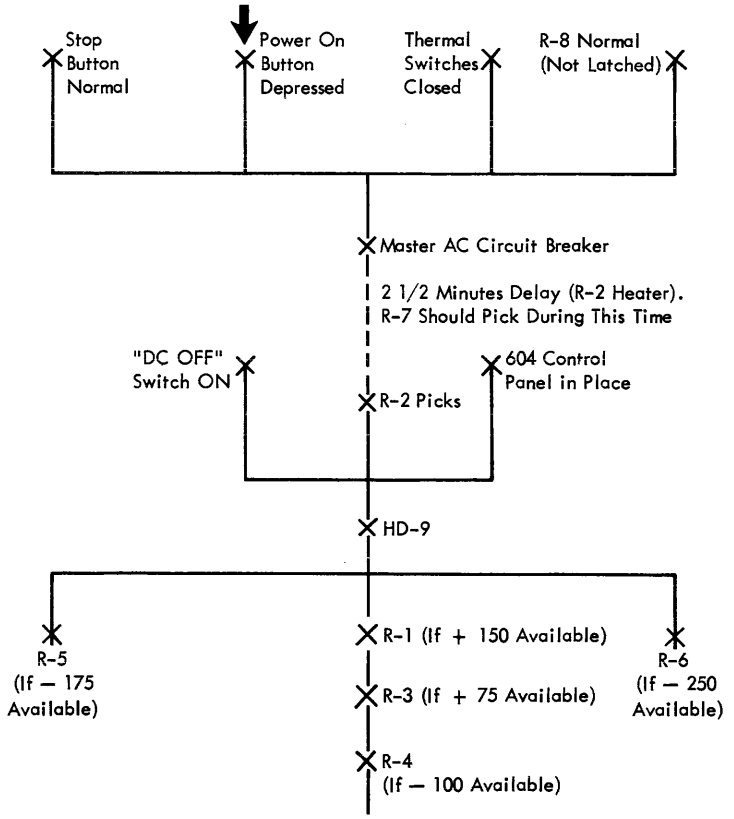

Figure 157. Power Supply Relay Function Chart

Each of the five DC supplies picks a separate duo-type relay. Largely as a remainder from an earlier design, some of these relays pick up sequentially. If CALC ON is jackplugged on the 521 control panel, all of the DC relays must be picked (indicating a full availability of power) before the interlock circuit to the 521 Punch will be completed. The 521 can be used as the calculator input-output unit only if the interlock circuit is completed. A de-energized interlock relay indicates a dead DC power supply or a defective relay point. Figure 157 gives a function chart of the interlock relay energization sequence. Regardless of the sequential nature of the energization of the interlock relays, all five DC power levels are made available to the 604 simultaneously. R4B and R5A points provide special delayed voltages used for Counter and other resets as discussed in Chapter Three of this manual.

The following discussions will expand on the details of the separate circuit areas discussed above.

DC SUPPLIES

UNLESS ELIMINATED BY DESIGN, at least two actions can cause a variation in the output voltage of a normal DC supply.

1. If the AC input voltage changes, the DC output will vary in the same proportion. With the 604 the input voltage to the DC supply transformers is regulated and does not vary. This eliminates fluctuations from this source.

2. As the load current drawn from a power supply is increased, the tendency is for the output voltage to drop due to increased $I \times R$ losses within the power supply components. In the 604 this tendency is greatly reduced by using low resistance transformers and gaseous type rectifier tubes. The transformers thus supply voltages that change very little under changing loads. Gas type tubes have a low voltage drop which actually tends to decrease as the load current increases. Taken together, a very "stiff" power source results.

Each of the five DC supplies uses the same type of full wave rectifier circuit illustrated by Figure 158. Regulated AC is supplied to the primary winding of the rectifier tube filament transformer and the plate supply transformer for each supply. The two gas diode rectifier elements are within the same glass envelope except in the plus 150 volt supply where separate tubes are used because of the high current demand. The alternating current supplied to the diode plates makes one and then the other go positive on alternate halves of the power cycle. Whichever plate is positive at the time attracts electrons from the corresponding filament-type cathode. The filament, in turn, replaces its lost electrons by drawing them from the load. The load gets its replacement electrons from the center tap of the plate transformer. The input power source, coupled through the transformer, supplies the power needed to keep the electrons flowing.

Since one or the other of the rectifier tube plates is always positive (except for very brief periods where the AC input wave crosses the zero volt point), electrons are constantly attracted from one filament or the other. The filaments are electrically commoned. As a result, the load has continuous, one directional (DC) electron flow through it. The up and down, two-per-cycle fluctuations in the voltage at the rectifier filaments must be, and are smoothed out in the load by the choke input filter consisting of the retard coil and capacitor. The coil flattens off the peaks, and the capacitor fills in the valleys. Quite smooth DC results at the output.

Voltages both plus and minus with respect to ground are required by the 604. With the two positive supplies (plus 150 and plus 75 volts), the center tap of the plate transformer (point A in Figure 158) is grounded to the machine frame. The external circuits (the load) are then connected between the machine frame and the rectifier tube filaments. The "electron drawing" action of the filaments causes an attractive, positive potential to be available at point B.

For the three minus supplies (minus 100, 175, and 250 volts), point B is grounded to the machine frame. The electrons being pushed out from the plate transformer center tap make point A go negative with respect to ground. This negative potential is then available to any machine circuits connected between point A and ground.

The circuit of at least one of the DC power supplies should be traced on the power supply print (or page 0-0802) to prove that the circuit does resolve to that given by Figure 158.

THE REGULATOR CIRCUIT

THE BASIC ELEMENTS of the regulator circuit are the buck-boost transformer, the saturable reactor, and the amplifier chassis. Their relationship is indicated by Figure 159. The regulated, 215 CV line is sampled and compared against a fixed standard reference voltage supplied by a thermister circuit. Changes in the 215 CV sample produce an "error voltage" which is amplified

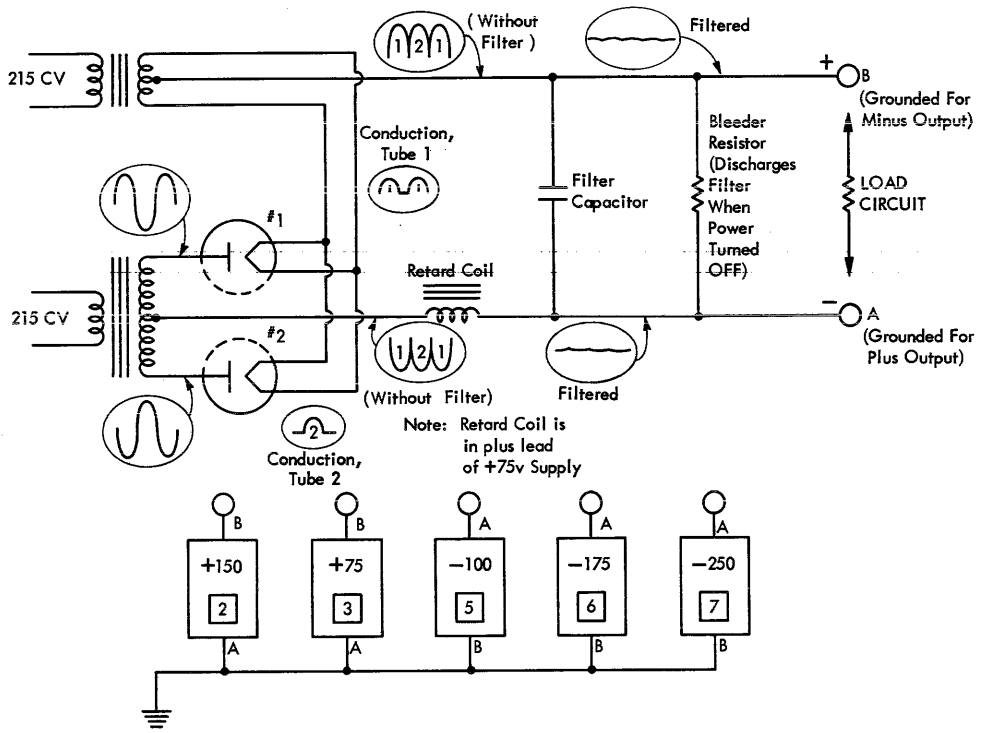

Figure 158. The Full Wave Rectifier Circuit Used by the 604 Power Supply Type 546

and applied to a current regulator circuit which in turn controls the saturable reactor. The saturable reactor then controls the amount of voltage the buck-boost transformer can induce into the regulated, 215 CV line. The overall circuit is arranged so the change in the buck-boost induced voltage compensates almost completely for the attempted rise or fall in the 215 CV line level.

The Buck-Boost Transformer

The buck-boost transformer has its secondary winding in series with one AC leg, in between the 210 volt unregulated input and the 215 Controlled Voltage output. The voltage induced from the primary into the secondary winding of the buck-boost transformer is

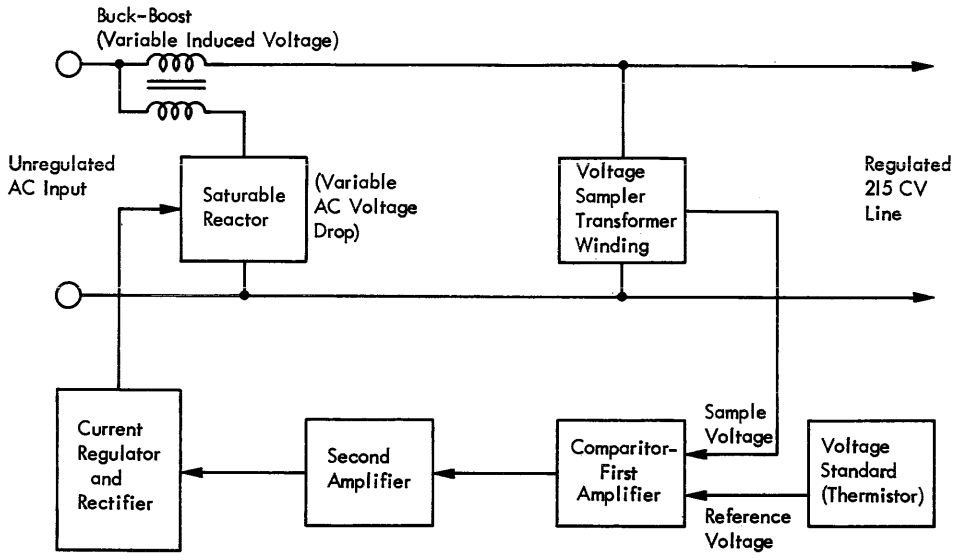

Figure 159. Logic of the Regulator Circuit

controlled by the saturable reactor which is in series with the buck-boost primary. The amount of the induced voltage, and its phase relationship to the unregulated input, are both varied by the control of the saturable reactor. The net result is that more or less voltage, and of a phase to help boost or buck the unregulated supply input, is induced in series with the AC line input. If more voltage is induced into the secondary, the phase is simultaneously shifted so this greater voltage further boosts the input voltage. If less voltage is induced into the secondary, the phase is simultaneously shifted so what induced voltage there is aids even less ("bucks") the input voltage. The components are designed so that a 210 volt unregulated input causes the voltage and the phase of the voltage induced into the secondary to do little more than overcome the insertion losses which initially resulted from putting the secondary winding between the input power and the circuits which use the power. If the 215 CV level tends to drop (due to a lowered input voltage or an increase in the load current) the regulator amplifier controls the saturable reactor in such a way that the voltage induced into the buck-boost secondary increases (and shifts phase) to build the regulated output (215 CV line) up to very near the original value. The reverse action occurs if the 215 CV tends to rise for any reason.

Parts A through D of Figure 160 show separately the phase and amount actions which exist in the operation of the buck-boost transformer. In practice both effects are constantly present, as indicated by part E.

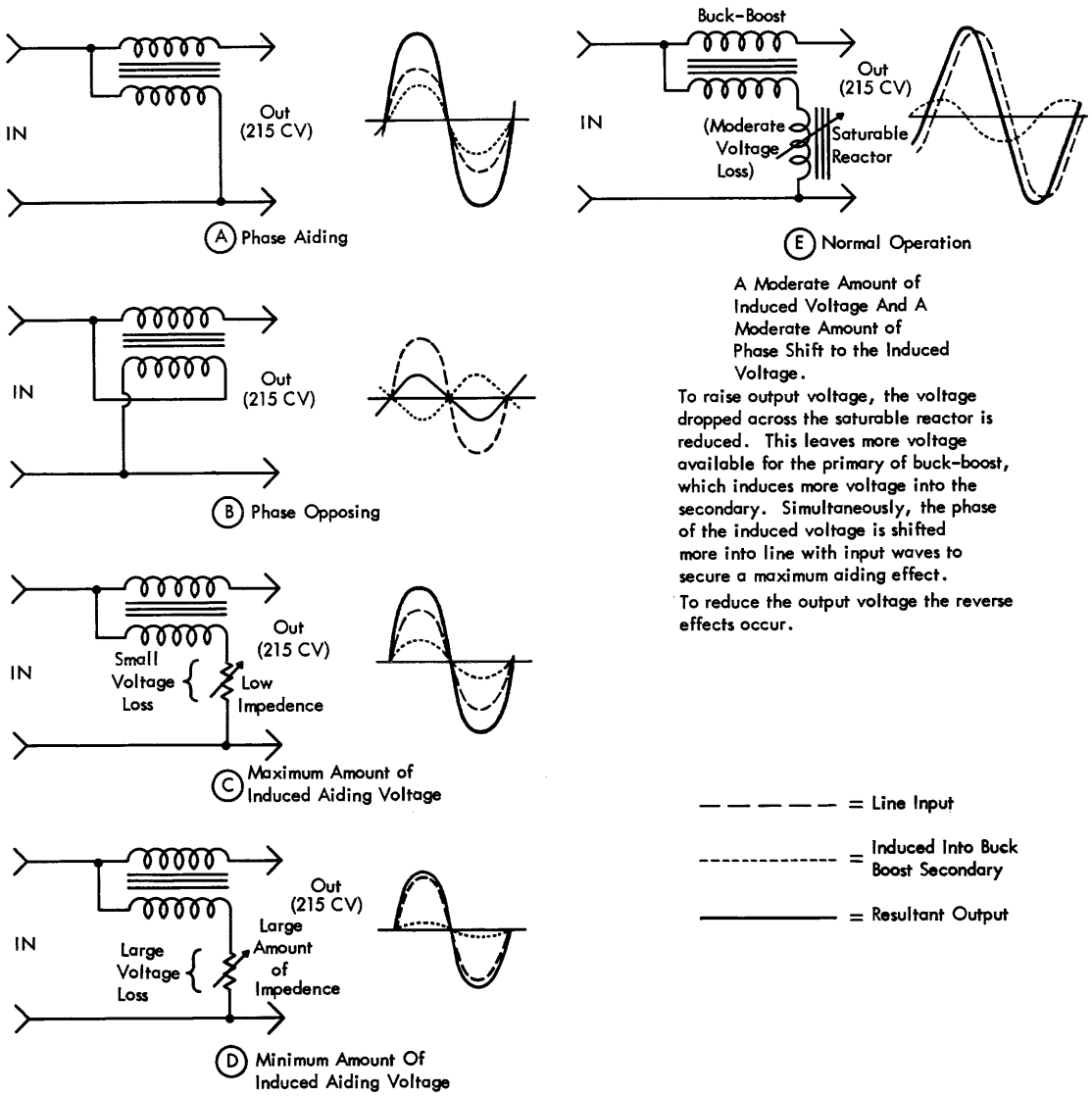

Figure 160. Isolated Principles of the Buck-Boost Transformer

The turns ratio of the primary to the secondary of the buck-boost auto transformer is 4 to 1. One volt is thus induced into the secondary winding for every four volts appearing across the primary portion.

The Saturable Reactor

The saturable reactor in series with the buck-boost transformer primary provides the means for controlling the amount and the phase of the voltage appearing across the primary. This in turn controls the amount and phase of the voltage induced into the secondary.

The principle of operation of the saturable reactor involves the magnetic flux within the iron core of the coil. This flux does not increase in direct proportion to the magnetizing current. Once the iron core is magnetically saturated, further increases in magnetizing current produce little increase in the flux density. Since it is the changes in the flux density which account for the impedence or opposition to electron flow that a coil exhibits to AC, eliminating the possibility for flux change will also eliminate the impedence. The voltage dropped across the inductor, as well as the phase of the current through it, depends upon the impedence; and the impedence depends upon how near the core is to saturation. The saturation can be controlled simply, and it is this fact which makes the saturable reactor valuable.

A saturable reactor consists of a three-legged iron core, as indicated by Figure 161. Windings 1 and 2, on the two outer legs, are in parallel and connected so the magnetic flux from the two coils cancels in the center leg. This is indicated by the dotted field lines in the illustration.

A third, independent coil is wound on the center leg of the core. Passing DC through this coil makes it possible to saturate the entire core. By varying the current through this coil, a variation in the degree of saturation can be obtained. If sufficient direct current is supplied to saturate the core, the operating point of the reactor will be shifted to point B in the chart of Figure 161. Inasmuch as flux saturation occurs at point B, very little additional flux change is possible. The parallel outer leg windings are connected in series with the primary of the buck-boost transformer. The AC input is then applied to the series circuit. With the core saturated, very little AC flux change will be possible in the saturable reactor. Since it is the *changing* magnetic flux that produces the back voltage force which creates the reactance and impedence in a coil, the impedence of the windings 1 and 2 will be very low. Very little AC voltage will be dropped across the reactor. Most of the AC will appear across the primary of the buck-boost transformer and induce a maximum voltage into the secondary. Furthermore, with the core of the reactor saturated, the phase shift of current through the coil is at a minimum, making the induced voltage more effective in boosting the output (215 CV) level. By reducing the amount of current through the DC winding, the impedence of windings 1 and 2 can be increased from near zero to a rather large value. The phase of the current through the 1 and 2 windings also shifts considerably. The result is a large voltage drop across the reactor coils, leaving a smaller amount available for the buck-boost primary. A smaller voltage is thus induced into the secondary and its phase tends to aid even less that of the input power. In the 604 power supply the amount of controlling DC through the center leg coil is supplied and controlled by the amplifier unit.

Under normal operating conditions the DC current through the control winding of the saturable reactor is in the range of 120 to 130 milliamperes. If the DC OFF switch is turned off, a reduced load is drawn from the 215 CV line. This tends to make the Controlled Voltage level rise. To compensate for this the current through the control winding drops to about 90 to 100 milliamperes. (These currents can be measured by connecting a DC milliameter of the proper range *in series* with the control winding. Power must be off when the connections are being made or if it is necessary to change polarity of the meter.) The 215 CV line steady state level should shift no more than a maximum of about 3 volts between the DC ON-OFF conditions if the regulator circuit is working correctly.

It should be noted that operating a reactor near the saturation point causes a bad distortion of the applied current waveshape. Harmonic frequencies are introduced in the output (largely the third, 180 cycle harmonic in the 604). Because of this distorted waveshape, which is finally induced into the secondary of the buck-boost transformer, only a particular type of AC meter can be used to measure the AC voltages in the machine. A conventional meter embodying a rectifier to measure AC (such as the IBM meter or the Simpson meter) will not give correct voltage indications. An iron vane type of meter will indicate correctly and should always be used. The AC meter mounted in the 604 tower is of this type.

To help reduce the amount of third harmonic component on the AC lines of the 604, a special third harmonic filter is employed in the type 546 power supply.

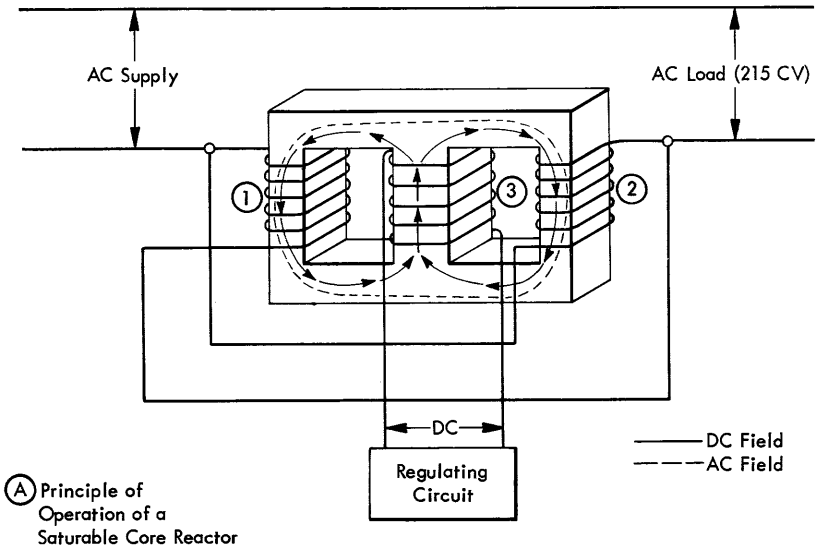

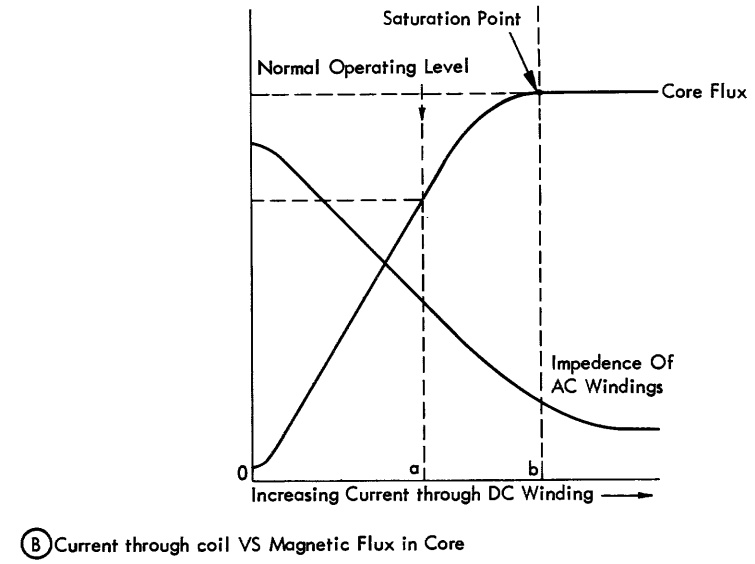

Figure 161. The Saturable Reactor

This is a resonant filter and unexpectedly high voltages (between 400 and 500 volts) are found across the components. Due caution should be exercised when working within the supply.

Figure 162 shows a typical waveshape seen across the 604 tube heater lines even with the harmonic filter in operation. Without the filter the peaking distortion would be even more severe.

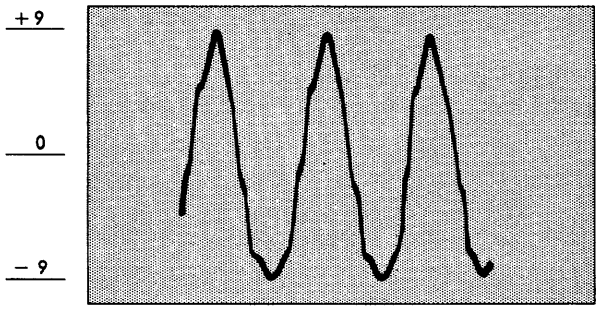

Figure 162. A Typical Regulated AC Waveshape Seen Across the 604 Tube Heater Lines

The Thermistor

The regulating circuit and the HI-LO circuit both compare a sample portion of the 215 CV line against a fixed standard voltage. As the sample voltage varies with

respect to this fixed standard, corrective action is taken by the amplifying and control circuits. The reference standard must have the same waveshape and phase as the sample voltage and to meet these requirements a thermistor unit is used. Only one thermistor is used in the power supply with both the regulator and the HI-LO circuits comparing against this one unit.

The thermistor unit shown in Figure 163 contains a pair of thermistor beads. These beads are of a material which decreases in resistance at a very rapid rate with increasing temperature. Due to the thermally insulated and hermetically sealed construction of the thermistor unit, the temperature of the beads is controlled almost entirely by the current through them. The greater the

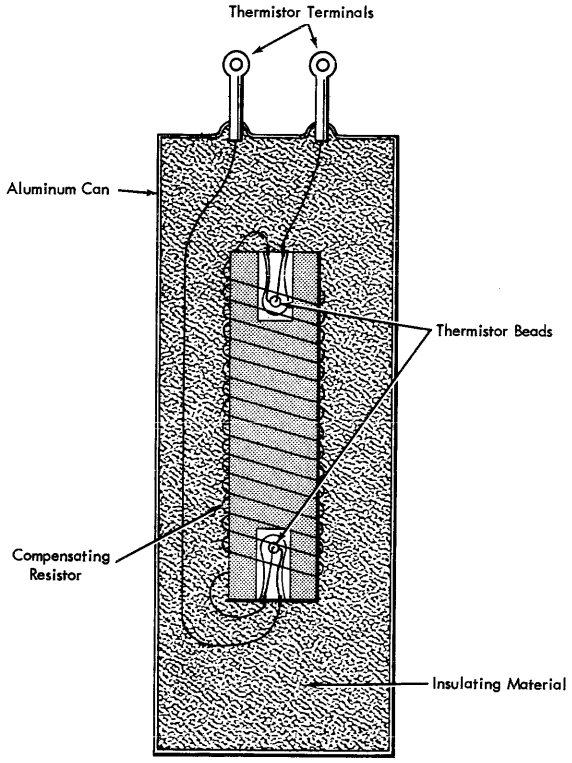

Figure 163. Thermistor Construction

current, the greater the temperature, the lower the rsistance, and the lower the voltage drop across the beads. This "negative resistance" characteristic (the voltage drop *decreases* as the current *increases*) is indicated by the chart of Figure 164. These beads are then connected in series with a matched, positive temperature coefficient resistor that is thermally coupled quite closely to the beads. The result is a total unit that will retain a constant AC voltage across its terminals over a fairly wide variation in current through the unit. This, too, is indicated by Figure 164. The thermal time constant of the assembly is sufficiently long (about one second) that no appreciable resistance change occurs within any one cycle of a 60 cycle wave. The waveshape of current through the unit therefore matches the applied AC. This fact, plus the constant terminal voltage, makes the thermistor unit an excellent AC comparison standard.

To obtain the voltage stable characteristics of the thermistor, it must be supplied with current through rather large external resistance values and from a voltage source much higher than the thermistor rating. The 604 power supply uses a 300 volt AC source fed through R602 and R603, which have a maximum total resistance of 13,000 ohms. The taps on these resistors are normally set at about 10k to match the particular thermistor.

Thermistor units come in various voltage and current ratings. Those in the 604 power supply (type 546) are rated at about 60 effective terminal volts AC at 25 milliamperes. Thermistor units are field replaceable. Some rating variation from unit to unit is normal. Voltage rating differences are automatically compensated for in the normal regulator and HI-LO adjustment procedure which must follow and thermistor replacement. If the *current* rating of the replacement unit differs from the original by one milliampere or more, the taps available on R602 and R603 should be adjusted. The series resistance should be reduced by as near to 350 ohms as possible with the taps provided for each *additional* milliampere required by the new unit, or vice versa. If

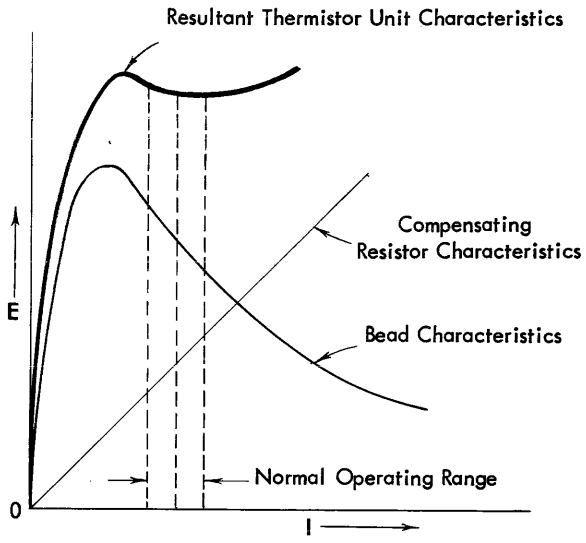

Figure 164. Thermistor Characteristics

an iron vane type of milliameter is available, it should be used for a more accurate current setting. It should be connected in *series* with the thermistor while setting the taps.

The Regulator Amplifier

Figure 165 is a schematic diagram of the regulator circuit given in wiring diagram form on page 0-0801 (or WD 303600). The regulator circuit operates on a completely AC basis. The only tube having DC on its plates is the 6AS7, and even there it is pulsating DC. The only difficulty this introduces is that the circuit actions cannot be discussed on a steady state basis unless we assume conditions at a particular point on the AC cycle and then treat this as a steady state.

A further item is that there is no common ground throughout the circuit which can be used as a reference point for all voltages. The dotted arrows on Figure 165 help this situation by indicating the points between which the voltages appear. It should be noted again that in a vacuum tube it is the voltage on the grid with respect to the cathode which is of major importance. It is this voltage which primarily controls the electron flow. To help reference level identification, the cathode line for the first amplifier and the separate cathode line for the second amplifier have been drawn heavy in Figure 165.

The objective of this circuit is to control the amount of current flowing through the DC (control) winding of the saturable reactor. If the 215 CV line voltage starts to drop, more current must be passed through the control winding to further saturate the reactor core. This will allow more voltage to reach the buck-boost transformer primary which will in turn induce a greater, boosting voltage onto the regulated line. The reverse actions must occur if the 215 CV tries to fall. All of the transformer windings shown in Figure 165 obtain their power from and therefore reflect any changes on the 215 CV line.

The 5U4 tube acts as a full wave rectifier similar to the DC rectifier discussed earlier in this chapter. The DC of current flowing through the DC (control) winding of winding and the 6AS7 are in series acting as the load circuit for this rectifier. Note that both triode sections of the 6AS7 are in parallel. The resistors in the grid and cathode leads are of low resistance and are used to eliminate instability (parasitic oscillations discussed in chapter two). Electrons "pushed out" from the center tap of the T-711 transformer secondary (275 volts each side of center tap) flow through the DC winding of the saturable reactor, up to the cathodes of the 6AS7, through the grid spacings to the plate, and to the commoned filaments of the 5U4. Whichever plate of the 5U4 is positive at any given instant will attract the electrons to complete the circuit. The cathode to plate area within the 6AS7 should be considered simply as a variable resistance which can be altered by changing the voltage on the grids with respect to the cathodes. As the resistance is varied, so too will the current through the tube and the DC winding vary. If the voltage on the 6AS7 grids is made *more negative* with respect to the cathodes, the resistance of the tube will *increase,* the current through the DC winding will *decrease,* the saturable reactor impedence will *increase,* and the 215 CV line will tend to *drop* in voltage. For

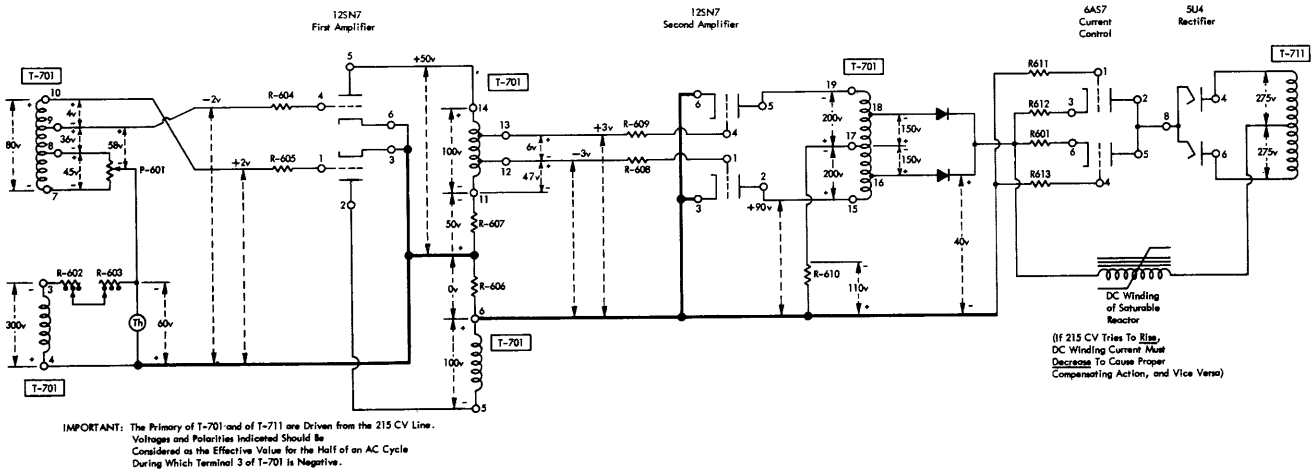

Figure 165. Schematic Diagram of the Regulator Amplifier

a less negative 6AS7 grid condition the reverse actions will result. This provides the necessary control of the saturable reactor. The two 12SN7 amplifier tubes have as their sole objective the development of the proper voltage on the 6AS7 grids to provide corrective action as needed.

Only one triode section of either of the 12SN7's is active on either half of the AC cycle; that is, the sections conduct on alternate half cycles. The voltages on the tubes are constantly changing, following the cyclic variations in the AC input. Loosely speaking, it is the "average" (effective) potential on the tubes throughout any half cycle that determines the circuit action. Figure 165 gives the effective voltages, polarities, and conditions for the AC *half cycle* during which terminal 3 of the thermistor driving winding of T-701 is negative. During this portion of the cycle the pin 4, 5, 6 section of the first amplifier 12SN7 and the pin 1, 2, 3 section of the second amplifier are active. (During the "positive" half cycle the alternate tube sections are active and the polarities indicated on the illustration are reversed.)

Grid pin 4 of the first 12SN7 amplifier will be at minus 2 volts (effective) during the "negative" half cycle chosen for our explanation. The themistor is supplying minus 60 volts to the grid circuit, but the 80 volt winding of T-701 and the taps on it provide an opposition voltage which is adjusted by P-601 to properly set the 215 CV line level. The minus 2 volts which results on grid pin 4 is a value normally found in a properly adjusted regulator. With minus 2 volts on the 12SN7 grid the tube is neither cut off nor saturated. (Both 12SN7's are designed to work as *amplifiers,* unlike most of the tubes in the *calculating circuits.*) Dur- our chosen half cycle plate pin 5 of the first 12SN7 is supplied a positive potential (from terminal 14 of T-701) and the tube is able to conduct. (The pin 1, 2, 3 section of the first amplifier has a minus plate *during this half cycle* and cannot conduct.) The electrons flow from terminal 11 of T-701, through R-607, through the cathode to plate area of the tube, and back to T-701 terminal 14. A 50 volt drop appears as a result across R-607. Any change in the voltage on the pin 4 grid will alter the amount of electron flow through the first amplifier and in turn alter the voltage drop across R-607. *It is the voltage drop across R-607 that controls the operation of the second amplifier.* (On alternate half cycles, when the pin 1, 2, 3 section of the first amplifier is active, it is the voltage drop across R-606 that takes control.)

Under the conditions of our example the top of R-607 (terminal 11 of T-701) is at minus 50 volts with respect to the cathodes of the second amplifier (this is true because there is no current flow and thus no voltage drop across R-606). 47 volts of this is bucked out by the polarity and amount of the voltage between terminals 11 and 12 of T-701, leaving a minus 3 volts on the pin 1 grid of the second 12SN7 amplifier. It is the pin 1, 2, 3 section of this second amplifier tube that is supplied positive plate potential and conducts during this half of the AC cycle. The terminal 15 through 19 winding of T-701 supplies the plate potential for the second amplifier 12SN7.

The electron flow through the second amplifier tube passes through R-610 and causes a voltage drop across it. *It is the voltage drop across R-610 that controls the operation of the 6AS7 current regulator.* Any change in electron flow through the second amplifier will change the voltage drop across R-610. Consequently, the voltage level (with respect to the second amplifier cathode line) of the entire terminal 15 through 19 winding of T-701 will float up and down under control of the second amplifier. The voltage across R-610 is opposite in polarity to the 150 volts induced between terminals 17 and 16 (or 17 and 18 on alternate half cycles) of T-701. It is the difference between the two levels which is "tapped off" through the selenium rectifiers connected to terminal 16 (or 18) and applied to the cathodes of the current regulator 6AS7. The selenium rectifiers prevent a short circuit across the transformer winding while permitting a proper amount of operating "bias" to be applied to the 6AS7 cathodes during both half cycles. It will be seen from Figure 165 that the 6AS7 cathodes are 40 volts positive with respect to their grids. The grids are thus at minus 40 volts with respect to the cathodes. Since the cutoff potential for a 6AS7 under the regulator operating conditions is minus 135 volts, a median value of current flows through the tube and the DC winding of the saturable reactor.

We can summarize the operation of the complete circuit as follows:

1. The voltage induced into the 80 volt winding of T-701 and the setting of P-601 controls the current flow through the first amplifier tube.

2. The electron flow through the first amplifier controls the voltage drop across R-607 (and R-606 on alternate half cycles).

3. The voltage drop across R-607 (or R-606) controls electron flow through the second amplifier tube.

4. The electron flow through the second amplifier tube controls the voltage drop across R-610 and makes the second amplifier plate supply T-701 winding float up and down in the process.

5. The difference between the amount of voltage drop across R-610 and the voltage between the center and tap 16 (or 18) of T-701 is picked off through the selenium rectifier and becomes the operating bias for the 6AS7 current regulator.

6. A change in operating bias for the 6AS7 will change the current through the DC winding of the saturable reactor.

7. The current through the DC winding finally controls the amount of voltage the buck-boost transformer can supply to the 215 CV line.

Adjusting P-601 changes the operating point of the first amplifier which in turn is reflected throughout the circuit and in the final level of the 215 CV line. The 215 CV line is set in this way to cause the proper amount of heater potential to be applied to the calculator tubes.

If the 215 CV level attempts to rise, all transformer voltages indicated in Figure 165 will increase. Due to the amplification through the tubes, the most important variation (in terms of overall effect) is in the amount of voltage applied to the grid of the first amplifier. Since this is so, only the voltage input to the first amplifier grid will be considered as changing in this discussion. With the same half cycle polarities used in the description of normal operation, an increase in the 215CV will cause a higher voltage to be induced into the terminal 7 through 10 winding of T-701. This cancels out an increased amount of the minus 60 volt thermistor potential (which stays constant) and makes grid pin 4 of the first amplifier less negative. The electron flow through the first amplifier will be increased. Due to the amplification factor of the circuit, the voltage drop across R-607 will increase by nearly 16 times the amount of the input change. The voltage level on the second amplifier grids therefore becomes more negative and decreases electron flow through the second 12SN7 and R-610. This in turn decreases the minus potential at terminal 17 of T-701 (because of the decreased voltage drop across R-610) and makes the cathodes of the 6AS7 become more positive with respect to the grids (that is, the grids are now more negative with respect to the cathodes). Current flow through the 6AS7 and the DC winding will decrease. The saturable reactor impedence increases as a result of this and less voltage is supplied to the 215 CV line from the buck-boost transformer. The 215 CV drops to very near its original value to restore the circuit to balance.

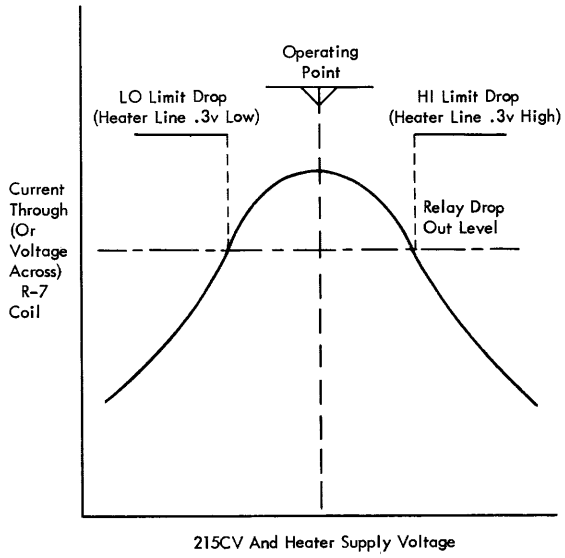

Figure 166. Operation of the Electronic HI-LO

If the 215 CV line attempts to drop, the reduced voltage induced into the terminal 7 through 10 winding of T-701 will permit a larger amount of the unchanged minus level of the thermistor to reach grid pin 4 of the first 12SN7. Pin 4 becomes more negative. Electron flow through the tube decreases. The voltage drop across R-607 decreases by a larger amount and lets grid pin 1 of the second 12SN7 become less negative. The increased electron flow through the second tube increases the voltage drop across R-610. Terminal 17 of T-701 becomes more negative and this shift is reflected at the cathodes of the 6AS7; they too become more negative, emit more electrons, and increase the current flow through the tube and DC winding of the saturable reactor. The reduced voltage drop across the saturable reactor AC windings allows a higher voltage to reach the primary of the buck-boost transformer. The higher output voltage from the secondary builds the 215 CV line up to very near the original value before circuit balance is again obtained.

THE HI-LO CIRCUIT

A FAILURE in the regulating circuits could easily apply excessive voltage to the calculating tubes, greatly shortening their life and that of the circuit components. Or, if the voltage level dropped, extensive calculation errors could result. The HI-LO unit is an independent sensing circuit which turns off the machine if the regu-

lated AC voltage strays very far from its proper value. There are two types of HI-LO detectors in use. The great majority of these detectors use an electronic circuit while the remainder use an electro-mechanical Sensitrol.

The Electronic HI-LO

The circuit (page 0-0801) is designed to detect an increase or decrease in the 215 CV line which could cause the heater and other voltages to shift to improper levels. While it is the 215 CV line which is sensed by this HI-LO, the adjustment of the circuit is related to the calculating tube heater potential controlled directly by this line. If the heater potential varies more than plus or minus three tenths of a volt, the HI-LO circuit will turn off the machine.

The operation of this circuit is similar to that of the regulator described earlier. The objective of the HI-LO circuit, however, is simply to hold up relay 7 as long as voltages are normal. If the heater potential shifts more than plus or minus three tenths of a volt, relay 7 is dropped out to pick relay 8 (latch type) which will then drop out the main AC circuit breaker. This sequence is shown by Figure 154. The operating curve of the HI-LO circuit is indicated by Figure 166. The same thermistor used for the regulator circuit also supplies a 60 volt AC fixed reference signal to the HI-LO. An output from a 215 CV sampling transformer is adjusted (by potentiometers P602 for fine and P603 for coarse) to exactly balance out the thermistor signal. This null condition is destroyed and an error signal created whenever the 215 CV sample varies either up or down. The rectified error signal is amplified and used when the error signal exceeds certain limits to cut off the tube holding up relay 7.

OBJECTIVE: (Figure 167.) To drop out relay 7 and pick relay 8 if the filament voltage shifts more than ±.3v.

A. Normal Operation

1. The voltage between the arm of P-603 and tap 12 of T-795 is compared to thermistor voltage to supply grid voltage to the first amplifier.

2. Voltage drop across load resistors 619 and 620 of first amplifier is compared to voltage across taps 4 and 5. Under normal conditions the potential difference between terminals 5 and 15 is very small.

3. Any voltage difference between terminals 5 and 15 is rectified across R-616 to bias the second amplifier. With no error signal there is very little bias.

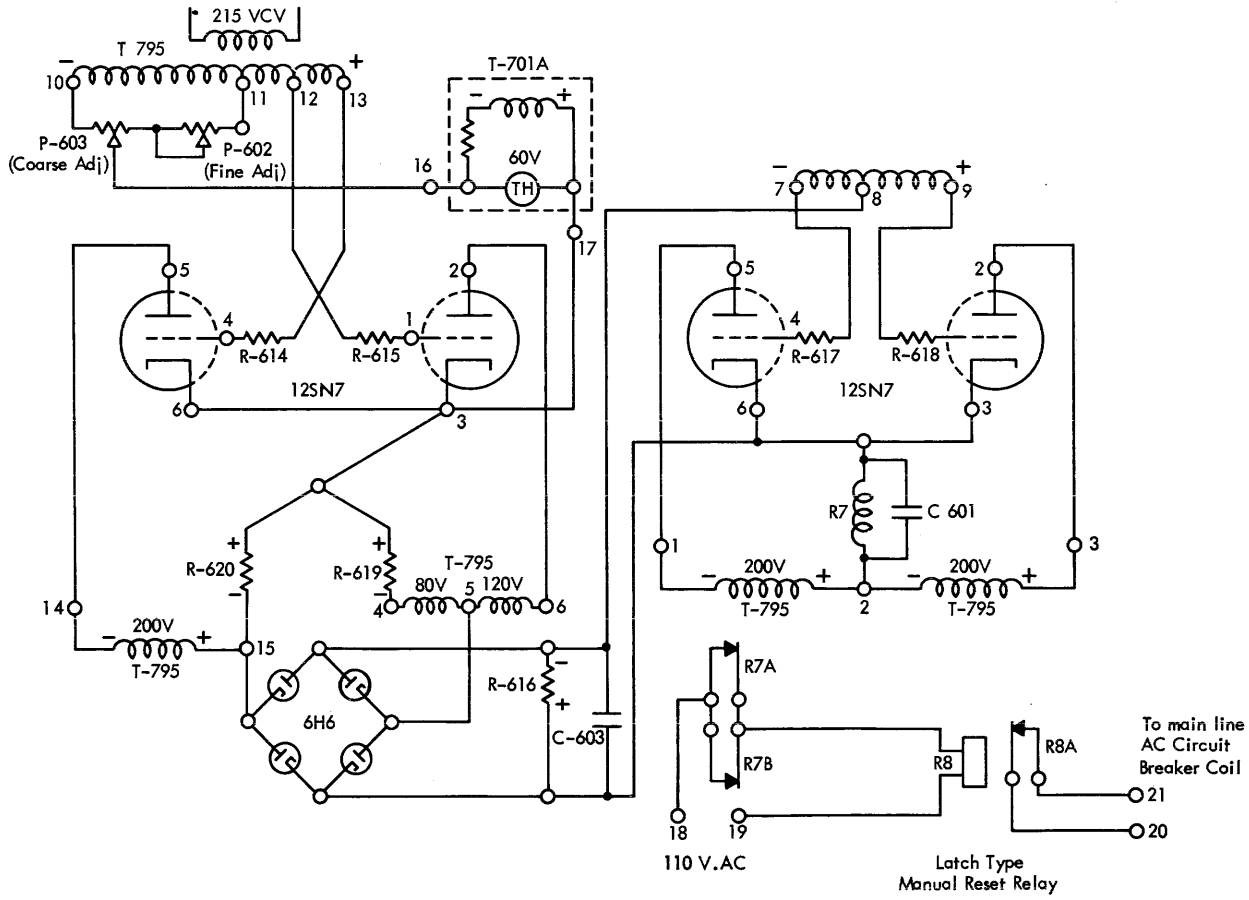

Figure 167. A Schematic Diagram of the HI-LO Detector

4. Load for second amplifier is relay 7 and current flow through this amplifier keeps relay 7 energized.

B. Low Voltage Condition

1. The voltage between the movable arm of P-603 and tap 12 of T-795 decreases while thermistor voltage remains constant. The grids of the first amplifier tube become more negative.

2. Voltage drop across load resistor R-619 or 620 is now smaller than compared voltage across taps 4 and 5. The voltage difference between taps 5 and 15 increases.

3. Difference in voltage at taps 15 and 5 is rectified and causes grid of second amplifier to go more negative which reduces current flow.

4. Relay 7 drops out.

5. Relay 8 picks to drop AC circuit breaker and turn off machine.

C. High Voltage Condition

1. Voltage between the arm of P-603 and tap 12 increases while thermistor voltage remains constant. Grids of first amplifier tube become more positive.

2. Voltage drop across load resistor 619 or 620 is now greater than compared voltage across taps 4 and 5. The voltage difference between taps 5 and 15 again increases.

3. Difference in voltage at tap 15 and tap 5 is rectified and again causes grid of second amplifier to go more negative, which reduces current flow.

4. Relay 7 drops out.

5. Relay 8 picks to drop AC circuit breaker and turn off machine.

Capacitor C-601 is placed across the relay coil to delay the operation, thus insuring that the relay will not be opened by line surges of very momentary duration. The introduction of this capacitive loading on the amplifier rectifier tube was found to give rise to an oscillation or "singing" in the output stage. Elimination of this oscillation was achieved by the addition of the small capacitance, C-603, in parallel with R-616 on the output of the bridge rectifier.

Adjustment of potentiometer P-603 and rheostat P-602 can be made in the following manner: With rheostat P-602 at center position and the 215 CV line adjusted to the desired value, adjust potentiometer P-603 until a near maximum DC voltage is obtained across the terminals of the relay coil R7 as measured with the IBM voltmeter. Rheostat P-602 can now be used as a fine adjustment to obtain a final setting which gives maximum voltage across the relay coil. These adjustments must be made slowly due to the long time constant associated with capacitance C-601 and the relay coil.

Operation of the relay can now be checked by raising and lowering the 215 CV. (Adjustment of the 215 CV is accomplished by means of potentiometer P-601 in the regulator section.) If P-603 and P-602 have been properly set as described above, relay R7 should drop out when the heater voltage is either plus or minus about .3v from normal. (R-8 can be *temporarily* blocked to prevent machine shut-off while this test is being run.) The range should be evenly distributed on each side of the operating point. Relay rise and tension and tube conditions affect the total range. P-602 and 603 adjust evenness of range distribution.

Sensitrol HI-LO Detector

System page 0-0821 gives a diagram of a power supply using the Sensitrol HI-LO detector. The Sensitrol is a thermocouple AC meter-like instrument with electrical contacts either side of the center range of the needle. If the needle indicates too high or too low, a contact is closed to pick relay 7 and drop the main line AC circuit breaker. The reset switch within the power supply must then be depressed before the machine can be restarted. The Sensitrol is fed directly from the heater supply lines. When the heater voltage is correctly set, the centering adjustment on the face of the Sensitrol is adjusted to set the needle midway between the contacts. While its action is very similar to a meter, the Sensitrol is not a true meter and should never be used to judge or set voltages.

After a turn-off and just before the calculator is turned on, the operating needle of the Sensitrol will be found held to either side because of a permanent magnet "error holding" arrangement. Centering fingers actuated by a 12 volt solenoid within the Sensitrol force the needle to the center position during warm-up. Relay 8AL points open as soon as time delay relay 2 picks (page 0-0822), killing the centering solenoid and releasing the Sensitrol so it can perform its HI-LO cut-off action.

The thermocouple unit within the Sensitrol is very easily destroyed, even by normal ohmmeter current. If it is ever desirable to check continuity of the circuit, be sure to take readings only from the line side of the 40 ohm current limiting resistor shown on the diagram.

OTHER ITEMS

Fusing

There are many AC and DC fuses within the 604 power supply. The part numbers for these fuses are given in the fuse chart (on page 0-0800), for instance. As a safety precaution the main line cord should be unplugged before changing any AC fuse since a number of them (F602, 603, 604, and others) are on the line side of any AC control contacts. They are therefore "hot" when the line cord is being fed.

The DC distribution system is indicated on page 0-0802. Each calculator tube panel has a separate fuse panel; these are located inside the tower, near the AC

and DC meters. There is a separate fuse for each voltage supplied to that panel. Each fuse has a neon bulb associated with it to indicate a blown fuse. A glowing neon generally indicates a blown fuse, but the reverse may not always be true because a neon bulb or limiting resistor can become defective.

The neon indicator current limiting resistors found in the DC fuse circuits seem somewhat complex for the job they do, but they are designed to insure more reliable operation. For example, plus 75 volts is not enough to cause reliable firing of a neon bulb; so, a special arrangement has been included to suuply additional voltage should a 75 volt fuse open.

Metering

The DC meter range switch permits reading any of the five DC potentials available in the machine. The meter should be checked periodically for zero setting with all power off, and adjusted as necessary.

The AC meter range switch permits reading the raw AC into the machine, the 215 CV line (which with most machines will read a few volts lower than 215), and the six volt heater potential at gate one and gate two. These heater voltages are fed back to the meter from pin 1 of the gate 1 and the gate 2 unit sockets furthest away from the filament transformer. Any loose connections between the filament bus bar joints, etc., will show up as a low meter reading or as a wide unbalance in heater voltage readings between gate 1 and gate 2 (two tenths to three tenths of a volt difference is normal).

Thermal Overload

Note the thermal overtemperature switches in series with the coil of the main circuit breaker (page 0-0801). These switches open and turn off the machine if the temperature at the top of gate 1 or gate 2 becomes excessive. Restricted air flow (dirty filters), defective blowers, or excessive voltage to the tubes can cause this overheating. The thermal switches are self-resetting as the temperature drops. No special action is needed except waiting and investigating the cause of the high temperature.

Rectifier Tubes

The gas rectifier tubes used in the power supply normally glow with a bluish vapor. An irregular fluctuation in this glow is normal. A rhythmic glow cycle may indicate tube or other trouble. Tubes cannot be tested by normal procedures, but defective tubes will generally show up as a lowered voltage from one supply or as an increase in ripple. Defective filter capacitors can also increase the ripple, and this possibility should not be overlooked.

Installation and Adjustment Sequence

The *604 CE Reference Manual* gives the procedure for installing and adjusting the power supply. Figure 154 indicates the interrelation of the voltage adjustments. The general order of operation is:

1. Set input transformer taps to setting nearest line voltage. (Pull line cord plug before doing this.)

2. Set heater potential to specified level by adjusting 215 CV line (P-601). Gate 1 and gate 2 differences should be split either side of specifications.

3. Set minus 100 and minus 250. Check all voltages.

4. Adjust HI-LO (or Sensitrol) for balance about operating point. Be sure to leave heater voltage setting at correct point.

The 521 Punch

THE 521 PUNCH is the input-output device for the 604 calculator. It may also be used as an independent gang punch. Two styles of 521 mechanisms are in use with 604's as discussed in Chapter One. Both styles of 521's must perform the same functions. The cards must be moved through the feed one after the other for reading purposes. They must be stopped momentarily at each cycle point to allow the selected punches to be driven through a non-moving card (to prevent tearing). They must be stacked. The running of the machine must be controlled. Timed pulses must be sent to the 604 for interrelated operations such as input and output and calculate start-stop control.

The lower bases of the two styles of machines are fundamentally the same, as are the circuits they hold. It is primarily the construction of the intermittent motion device (the geneva mechanism) which is different. Figures 15, 16, and 17 should be consulted for comparisons, overall construction, and parts identification.

THE CONVENTIONAL OIL BATH 521

THE GENERAL CONSTRUCTION of this type of punch is so similar to the punch side of a 514 (or any similar IBM 100 card per minute punch) that detailed description will not be given here. The addition of the set of first reading brushes between the first feed roll and the punching station (die and stripper) has made a longer drive housing necessary. An extra feed roll gear has been added and two idler gears inserted between the drive pulley shaft and the eccentric shaft drive gear. Any other changes are minor in nature. Figure 168 is a photograph of the internal parts of the drive housing, while Figure 169 diagrams the gearing and flow of mechanical power.

The circuit breakers used with the conventional drive housing 521 are of two types located in three rows. Critical circuits, and those supplying more heavy load currents, use the rocker arm style circuit breaker. These

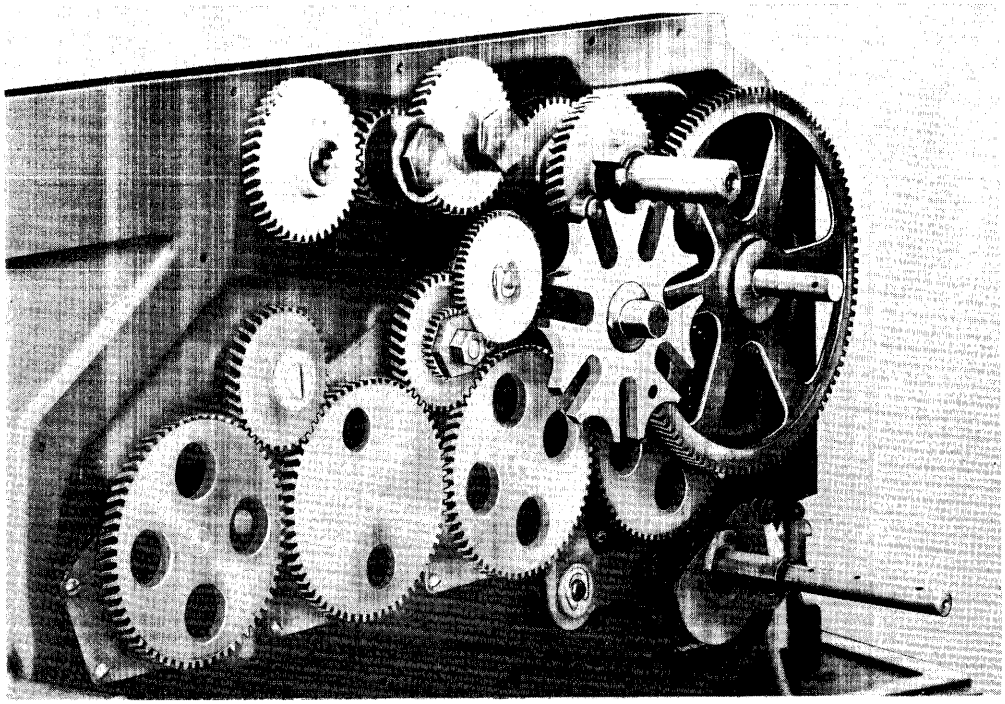

Figure 168. The Inside of the 521 Conventional Geneva Drive Housing

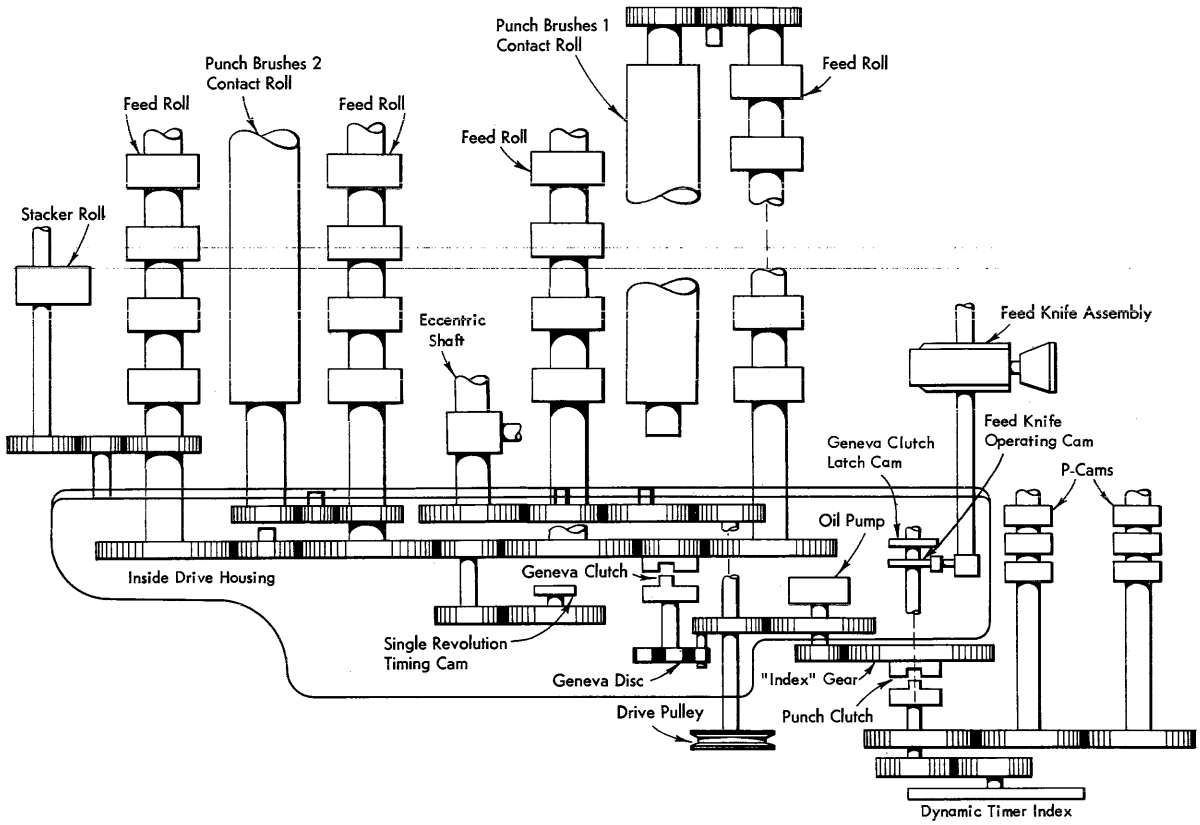

Figure 169. A Schematic of the Gearing and Mechanical Power Flow, Conventional Drive Housing

are called CB cams. The remainder of the circuits use the plunger variety and are called P cams. As with all punches, these circuit breakers should be kept in good condition. With the 604-521 combination, the possibility is added that CB trouble will show up and closely resemble calculator circuit failures. Ordinarily, for best results, the dynamic timer index should be timed to the punch clutch engaging point (13.5) and then used for checking CB timings under power.

THE REDESIGNED DRIVE 521

THE REDESIGNED drive mechanism for the high speed punch has been developed to eliminate oil leakage and to make the unit more accessible for servicing. More details of the type of unit will be given here because this is a less familiar type of mechanism not covered in other manuals.

The drive housing contains only the geneva disk and the geneva drive roller, rather than the complete feed roll drive mechanism contained within previous housings. This reduces the number of housing shaft projections from ten to two. The number of hole plugs have been reduced from eight to two.

Some items of interest about the redesigned drive housing are as follows:

1. Feed roll and contact roll drive gears are outside of the housing and their shafts have been increased in diameter for greater strength.

2. Punch clutch and geneva mechanism have been strengthened.

3. Card feed knives are driven by complementary cams from the front of the machine.

4. There is bevel gear drive to the feed rolls and stacker shaft.

5. The single revolution timing mechanism is eliminated.

6. The oil pump is eliminated.

Figure 170 is a photograph of the overall mechanical details.

Operation

The basic operation of the redesigned drive housing is similar to the previous drive in that the punch clutch controls the application of intermittent motion to the

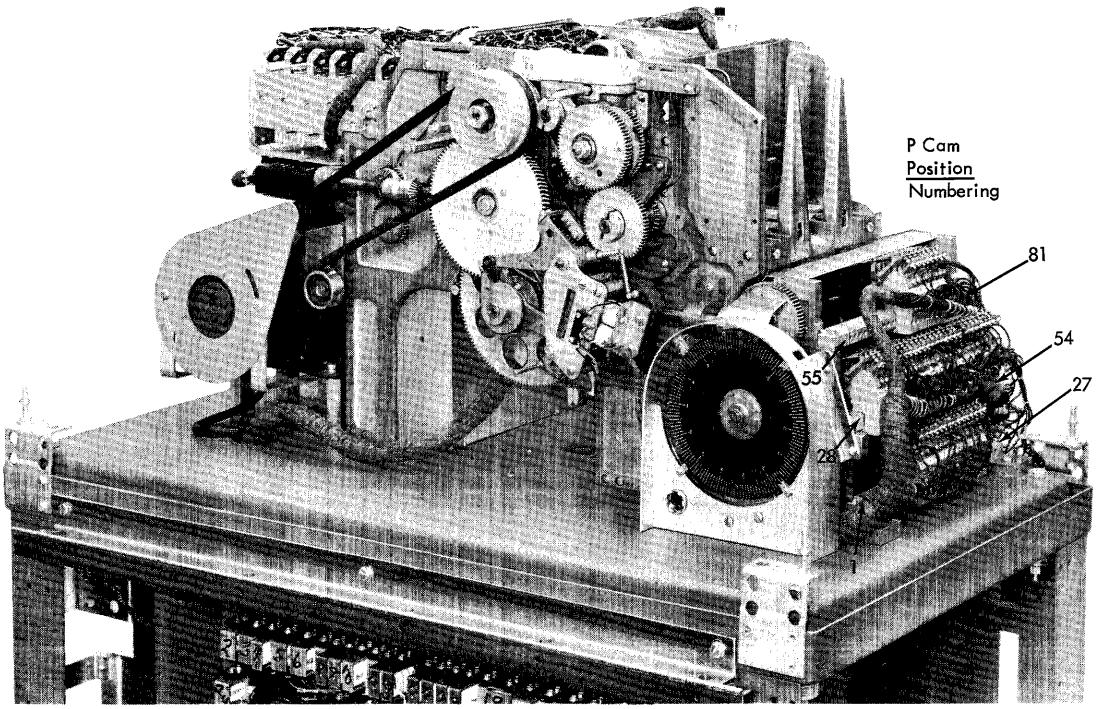

Figure 170. The Redesigned 521 Geneva Housing

feed rolls. The difference is in the linkage and the gear train through which the drive is obtained.

Figure 171 studied together with the following explanation will provide an understanding of the mechanism.

The drive pulley shaft rotates counterclockwise and runs continuously with the motor. This pulley shaft has the dog disengaging cam and the eccentric shaft drive gear mounted outside the housing to provide a continuous motion to the eccentric shaft and dog disengaging mechanism. The geneva disk driving roller is also mounted on the pulley shaft, but is located inside the housing to provide a drive for the geneva disk. The intermittent motion of the geneva disk is transmitted, through its shaft, to a split collared drive gear outside the housing. This gear drives the geneva disk idler gear and feed roll ratchet with an intermittent motion.

The engaging of the feed roll dog and the feed roll ratchet is under control of a linkage mechanism located outside the geneva housing and controlled by the punch clutch. The tail of the feed roll dog bears against a roller which is mounted on a triangular piece pivoted on the upper control arm. The third corner of this triangle holds the dog disengaging roller that bears against the dog disengaging cam which is being driven continuously from the drive pulley shaft. To allow the feed roll dog to engage with the feed roll ratchet, the upper control arm must move the disengaging rollers out of the way. The upper control arm is positioned by the lower control arm which is controlled by the control arm cam. The control arm cam is fastened to the punch clutch shaft. A one tooth ratchet is continuously driven by the "index" gear which idles around this shaft. The "index" gear is driven through the large phenolic idler gear from the same drive pulley gear that drives the eccentric shaft. If the punch clutch is energized, the punch clutch dog will engage the one tooth ratchet at the following 13.5 time on the "index" gear. The punch clutch shaft and control arm cam begin to rotate and almost immediately permit the lower control arm to drop down. At 14.1 the feed roll dog drops into the feed roll ratchet, and the mechanism is ready to start imparting intermittent motion to the feed roll drive gear. This gear in turn intermittently drives through bevel gears the feed roll drive shaft and feed rolls.

The dog disengaging cam on the drive pulley shaft is used, when latching the feed roll clutch, to lift the feed roll dog out of the feed roll ratchet at a time when the geneva disk is not in motion, thus reducing strain on the mechanism. Before this action can take place, however, the punch clutch must be latched up so the high area of the control arm cam will be under the lower control arm at 14.1 "index" gear time.

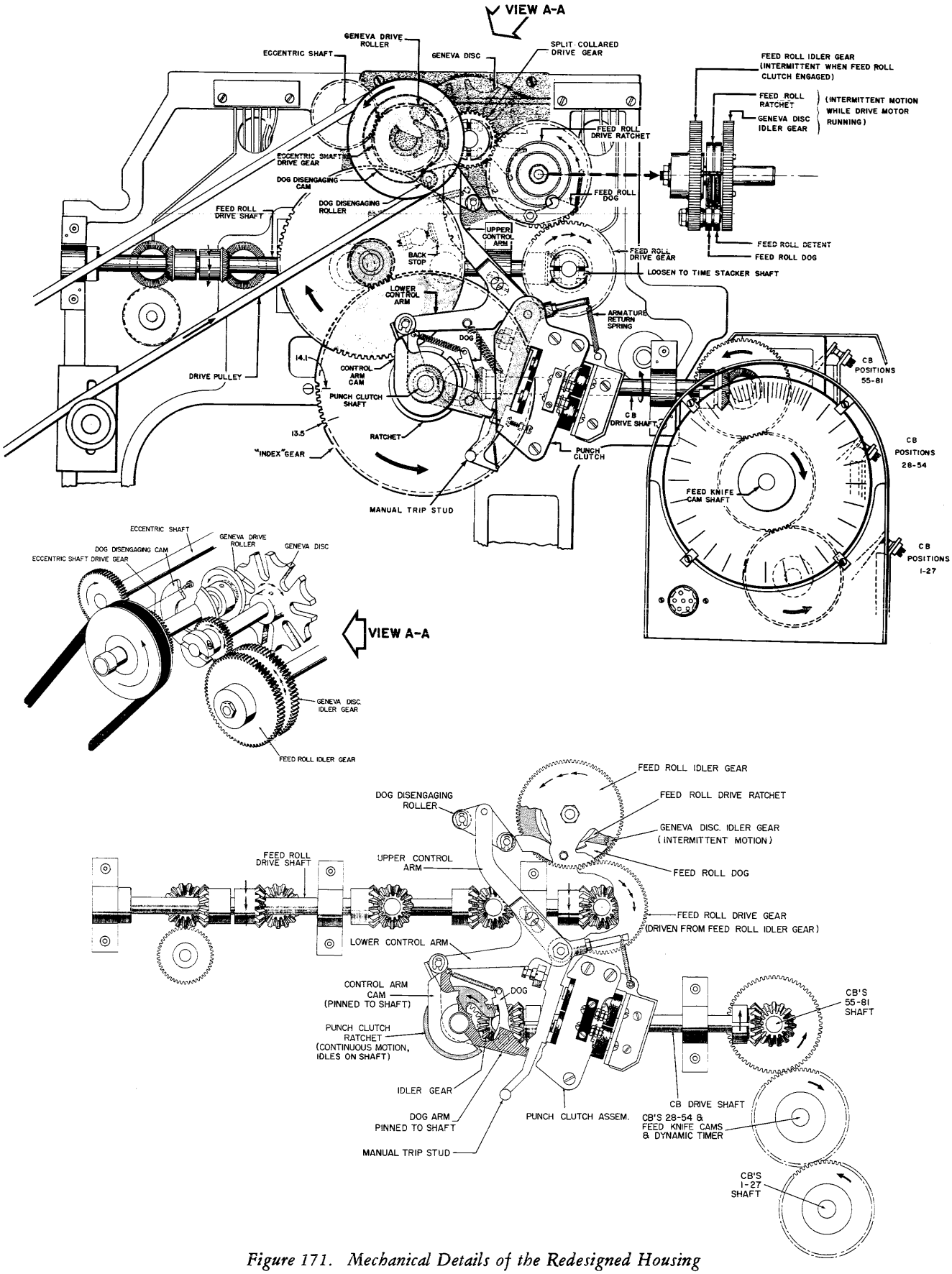

Figure 171. Mechanical Details of the Redesigned Housing

A gear on the inner end of the punch clutch shaft drives an idler assembly that imparts a smooth motion (when the punch clutch is engaged) to the CB drive shaft. The CB drive shaft drives the dynamic timer and CB cam shafts. The feed knives are operated by complementary cams mounted on the front end of the center CB shaft.

The adjustments for this type of drive mechanism are given by the *Customer Engineering Reference Manual for the IBM 604, H suffix and Above."*

The P cams (circuit breakers) used on the redesigned 521 are a unitized rocker type that fit in about the same space as the plunger variety. These CB's should be kept clean and checked for freedom from binds (particularly at the point where the contacts just close). CB troubles can be reflected in 604 calculator operations and be very difficult to analyze, particularly if they are not suspected.

POLARIZED MAGNET UNIT

THE MAGNET UNITS supplied with the redesigned drive 521's, as well as with a number of the punches supplied with G suffix calculators, have a polarized arrangement of punch magnet coils. If the coils on either side of a given coil in a non-polarized magnet unit are energized at the same punch time, it is possible for enough leakage flux to pass through the center core to attract the center armature and cause an extra punch. This leakage flux was found to be a possibility for trouble only with the eight magnets mounted on any common bar (10, 20, 30, 40, etc., 9, 19, 29, 39, etc.). The somewhat higher voltages used in the 521 (as compared with other punches) brought about a marginal condition which was eliminated by magnet unit polarization. The eight magnets on each common mounting bar are connected to have paired polarities as indicated by Figure 172. As can be seen, if magnets 1 and 3 are energized at the same time, flux cancellation will take place in magnet 2 and eliminate the possibility of stray punches from this source. This polarization was accomplished by reversing the connection of the leads running directly from the alternate paired coils to the terminal strips. Polarized magnet units can be identified from this lead arrangement.

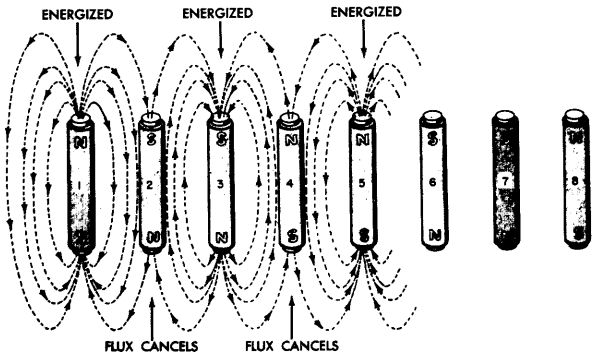

Figure 172. The Principle of the Polarized Magnet Unit

521 PUNCH CIRCUITS

THE 521 MAY BE USED separately as a standard gang punch or with the 604 as its input-output device. It has a reading station preceding the punch station and the necessary cams and other circuits to operate the 604. To change from calculate operation to gang punch operation, one plug on the 521 control panel must be shifted from the CALCULATE ON to the CALCULATE OFF position and vice versa.

Before studying individual circuits, examine the general layout of the components of the wiring diagram. References are to WD222301M and *System Diagrams* logic page 0-0700, run interlock circuit.

WD222301M is divided into 18 sections laterally. Each section is divided horizontally in the center and labelled A and B. The general layout of the diagram by sections is as follows:

1. Power supplies, thyratron circuits, fuses, and drive motor.

2. Card levers, start and stop circuits, punch clutch, dynamic timer, error indication relays and auxiliary start key jack.

3. Card cycles hubs, factor and general storage assignment hubs, signal lights, and calculator controls.

4. Impulse circuit breakers, reading brushes, column splits, punch magnets, and stop controls.

5. DPBC circuits and relay chart.

6. Pluggable stop circuits, unfinished program, zero check, product overflow and punch suppression.

7. Pilot selectors and EC connector location chart.

8. Calculator selectors, punch selectors, and negative balance selectors.

9. Factor storage, general storage, MQ entry and read-in controls.

10. Digit selectors EC connector chart, counter and general storage exit, and counter and general storage read-out controls.

11-14. Location charts.

15. Control panel locations.

16. Electrical cam location chart.

17-18. Electrical timing chart.

The circuits are described and explained in the following text by first giving a brief discussion of the operation and the circuit. This is followed by the circuit outline, which includes only the points necessary to follow the circuit. Circuits for machines earlier than the M suffix differ in some small details, such as P cam numbers, etc., but are basically the same. If functional operations are understood, no trouble will be experienced.

Power Supply

The 521 operates from 190/208/230 volts, 60 cycles, 3-wire single-phase AC obtained from an outlet on the 604 calculator. The center leg is grounded. Two separate DC voltages are developed in the supply. The voltage used for the conventional relay circuits should be set for 45-50v with the machine idle. This is called the "48v" supply and its output voltage can be measured between post CH4 and ground post CH3. The voltage supplied for thyratron operation in the calculator (called the "65v" supply) should be set for 60-65v with the machine idle. This voltage can be measured between post CH2 and CH3. Note that CH3 is grounded to the machine frame (the symbol is located near the 7.5 amp rectifier). The 604 and 521 machine frames are interconnected through the green wire in the 521 power attachment card. The arrangement and parts for this power supply are given in Figure 18.

Run Interlock (Page 0-0700)

The interlock circuits are controlled by punch control panel wiring. The punch cannot be started unless all interlock conditions have been completed.

It is not necessary to remove the cable interconnecting the calculator and punch during a gang punch operation. The units can be interconnected because the punch control panel wiring takes precedence and selects the operation to be performed.

The 604 contains a time delay relay, R2. This relay is similar to bi-metallic strip time delay relays in other IBM equipment using vacuum tubes. It is picked 2½ minutes after the calculator start switch is depressed. The time delay relay increases tube life by allowing the filaments to heat before any DC voltages are applied.

The power supply duo relay points (R5B, 3AL, 6B, 4A, and 1B) are operated when the DC voltages in the calculator are developed. These relay points in series are interlocks to prevent starting the punch until the DC voltages have come on.

GANG PUNCH OPERATION

OBJECTIVE: To energize the punch start relay (R3), run relay (R4), and HD motor relay when the punch is operated as a separate unit. CALC OFF hubs must be wired.

1. R2 picked by control panel wiring.
2. R3P, R4P energized from CALC OFF hubs, through 2-6N/O, 13-2N/C, stop key, stacker switch, auxiliary start key jack, and the start key.
3. R4H energized through the above network and 4-N/O.
4. R3H and HD motor relay energized from post 9, knockoff bar contact, die contact, P31 and R3-2N/O.

521-604 OPERATION

OBJECTIVE: (Page 0-0700.) To energize the punch start relay R3, run relay R4, and the HD motor relay by the punch start key when the punch and calculator are operated as one unit. The calculator time delay relay will pick after a 2½ minute delay; then the DC calculator voltages will come on and operate the power supply duo relays. CALC ON hubs must be wired.

1. R3P, R4P are picked from CALC ON hubs, through EC67, PUNCH STOP key, power supply duo-relay points (N/O) in series, EC68, 2-5N/C, STOP key, stacker switch, auxiliary start-key jack, and the START key.
2. R4H energized through the above network and 4-1N/O.
3. R3H and HD motor relay energized from post 9, knockoff bar contact, die contact, P31, and 3-2N/O.

Running Circuits

The circuits to energize the punch start relay, R3, R4, and the HD motor relay are described under "Run Interlock" and are not duplicated here. The associated running circuits are described using WD222301M.

GANG PUNCH OPERATION

OBJECTIVE: To establish running circuits for the punch. CALC OFF is wired.

1. (2B) R3H and HD relay held by 3-2 and P31 until 8.8.
2. (1A) Drive motor energized by HD points.
3. (2B) Punch clutch energized by 3-3 and P32 to cause the machine to take one punch cycle.

521-604 OPERATION

OBJECTIVE: To run the punch and apply plate voltage to thyratrons in the 604. CALC ON is wired.

1. (1A, 2B) R3, R4, and HD hold, drive motor, and punch clutch circuits are the same as for GP operation.
2. (2A) Pick die card lever relay, R6.
3. (1B) R6 points apply thyratron voltage through P18, P19, P20, and P21 to EC connectors.

The punch continues to run as long as R3 and R4 are energized. With cards in the magazine, the start key must be depressed four times before the punch will run continuously.

The card lever relay points in series with R3 and the HD motor relay provide the hold circuit to keep the punch running.

STOP KEY

OBJECTIVE: To stop the punch by depressing the stop key.

1. (2B) Stop key opens hold circuit to R4.
2. (2B) R3 and HD relay drop out at 8.8 when P31 breaks.
3. (2B) Punch clutch magnet cannot energize with 3-3 open, and the punch clutch latches.

CARD LEVERS

OBJECTIVE: To show the operation of the card levers and their purpose in the circuit. The card levers perform two primary functions: 1) to complete circuits to the reading brushes, 2) to complete circuit to start relay for continuous feeding.

NOTE: Card lever timings below are given for cut corner cards. With square corner cards, the brush card levers make at the end of a cycle instead of at the beginning of the next cycle, but the basic machine operation is unchanged.

A. (2B) With cards in magazine, magazine card lever contact is closed.

B. First Cycle: With cut corner cards, no other card lever contacts are closed at end of first cycle.

C. Second Cycle.

1. (2A) R5 picks at beginning of second cycle.
2. (4A) R5 points complete circuit to first reading brushes.
3. (2A) R6 picks at end of second cycle.
4. (1B) R6 points complete circuit to supply thyratron voltage to calculator.

D. Third Cycle: With cut corner cards, no change.

E. Fourth Cycle.

1. (2A) R7 picks at beginning of fourth cycle.
2. (4A) R7 points complete circuit to second reading brushes.
3. (2B) R3 and HD relay hold circuit is now set up through card lever relay points to operate the machine continuously.

Punching

Punching may be controlled from the 604 or the 521.

PUNCHING FROM THE 604

OBJECTIVE: Punch the card passing the die by impulses from the 604.

1. (4B) The punch magnets are energized from general storage or counter exits by impulses from the 604.

PUNCHING FROM THE 521

OBJECTIVE: To punch the card passing the die by impulses from a card passing the reading brushes.

1. (4B) The punch magnets are energized by wiring from the reading brushes.

Punch Suppression

All punching of a card may be suppressed by wiring the punch suppression hub. This hub accepts any impulse, and suppresses punching during the following cycle. Normally this hub is wired from the first reading brushes to suspend punching as the specific card passes the die and stripper.

OBJECTIVE: To open all normally closed points in series with the punch magnets.

1. (6B) R36 picked by any punch in the card.
2. (6B) R36 held by P33 and 36-1 until 13.0.
3. (6B) R37 picked by 36-3 and P34.
4. (6B) R37 held by 37-1 and P35 until 0.0 of next cycle.
5. (6B) R38 picked by 37-3 and P36.
6. (6B) R38 held by 38-1 and P33 until 13.0.
7. (4B) R107 through 113 picked by 38-3, 38-4, and P33 from 14.5 until 13.0.
8. (4B) Punch magnets cannot be energized with R107 through 113 picked.

Note the 3-5 point in parallel with 37-3 to pick relay 38 (section 6B). Relay 3 is held in parallel with the heavy duty motor relay and is down when the machine is not running. If the punch clutch is manually tripped and the machine turned over by hand, the punch suppress control relay 38 will be picked through 3-5 normally closed. This will prevent any punch magnet energization and overheating from overly long impulses.

Polarity Trap

The polarity trap is a selenium rectifier connected to prevent the contact rolls from receiving a negative spike when an inductive circuit is broken by the P cams. Normally, an inductive element such as a punch magnet or relay coil is energized through the brushes and cam contacts. When the circuit is broken by the cam contacts, the inductive energy produces a considerable negative voltage which could erroneously operate some of the controls in the calculator. The polarity trap has been furnished to suppress this negative transient.

The 2500 ohm resistor across the polarity trap serves to connect the common brushes of the two contact rolls to ground. This resistor is a calculator requirement and is necessary to stabilize the contact rolls at ground potential when they are not connected to the +48 volt line through P14, 15, 16, and 17. Otherwise, a "floating" brush circuit may cause erroneous operation of the triggers in the electronic storage units. The left side polarity trap rectifier (post CH6) is used in earlier machines to protect the *equivalent* of P-68 from negative kickback.

TESTING THE POLARITY TRAP

Random failures that occur only while the punch is running can indicate polarity trap failures (among other possibilities, such as CB's). The polarity trap can be readily tested by using the oscilloscope. No covers need be removed from the machine. A weak polarity trap

builds up a higher than normal forward resistance which does not swamp out the negative spike. By observing the magnitude of the spike, the condition of the trap can be determined.

Wire a control panel and use cards to gang punch ten columns of the same digit (do not use the digit emitter for this). This will put an adequate load on the polarity trap. The oscilloscope should be connected directly across the polarity trap. This is more easily done by grounding the scope to the machine frame and connecting the probe to the DIGIT IMPULSES hub of the 521 control panel. The punch should then be run continuously. If the scope has a triggered sweep (such as the Tektronix), the internal sync setting with a slow sweep will produce a steady picture which should look like Figure 173. The negative-going signal when the CB impulse ends should not go more than 15 volts below the base line. If the negative spike is greater than this, the polarity trap should be replaced. With the 521 L and M suffix machines, the normally unused side of the polarity trap may be substituted in an emergency.

With a scope not having a triggered sweep, a steady picture will be more difficult to get, but a steady pattern is not really necessary. The negative spike amplitude is the only point of interest. A slow sweep should be used (in the range of 3-15 cps). The Single Sweep feature supplied on the IBM model of the Waterman may be useful.

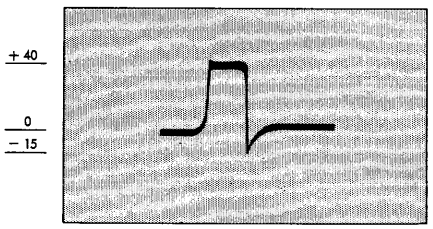

Figure 173. Normal Polarity Trap Waveshape

Selectors

The two digit selectors, furnished as standard equipment, are shown in sections 9 and 10 of the wiring diagram. They may be used either as digit selectors or digit emitters.

X RELAYS AND COLUMN SPLITS

The column split relays (4B) are under control of P37 and are used in circuits to separate 12 and 11 timings from 0 through 9 timings. The points of R22 are available at the control panel for use in control panel wiring. Other column split relay points are used throughout the machine for similar purposes.

The CB impulses from P14, 15, 16, and 17 are reduced by P30 to 0 and X impulses, and are further filtered by R19-1 into X impulses only. The X impulses are then available for use in the various error circuits.

PILOT SELECTORS

The pilot selectors are conventional selectors furnished with X digit and immediate pickup hubs. Each selector is provided with two sets of contacts brought out to the control panel to enable the operator to set up various controls. The COUPLING EXIT hubs permit coupling to a punch selector for increased capacity. Five pilot selectors are standard. Three circuits are outlined for the three types of pickup.

X PU OBJECTIVE: To impulse a pilot selector with a 12 or 11 impulse so that the selector points will be transferred for the following cycle.

1. (7A) R41 picks 2 coil energized by an 11 or 12 impulse through 19-2.
2. (7A) R41 held by 14-1 and P33 until 13.0.
3. (7A) R42 picked by 41-2 and P34.
4. (7A) R42 held by 42-1 and P35 until 0.0 of the cycle following the pick of R41.
5. (7A) R43 picked by 42-3 and P36.
6. (7A) R43 held by 43-1 and P33 until 13.0.

D PU OBJECTIVE: To impulse the D hub any time from 12 through 9 and transfer the selector for the following cycle.

1. (7A) R41 pick 1 coil energized by impulse into D hub.
2. (7A) Operation after R41 P1 picks is the same as for X PU above.

I PU OBJECTIVE: To impulse the IMMEDIATE PICKUP hub any time from 12 through 9. The selector will transfer immediately and will return to normal at the end of the cycle.

1. (7A) R41 pick 1 coil energized by impulse into D hub.
2. (7A) Operation after R41 picks is the same as for X PU above.

PUNCH SELECTORS

The punch selectors are 6 position wire contact relays. These selectors are provided with immediate pickup only, and may be picked up from 12 through 9 time and remain operative during the rest of the punch cycle. They may be operated directly from the card; or they may be delayed if they are operated in conjunction with one or more pilot selectors using the coupling exits. The first point of each punch selector is used to provide a hold circuit for the selector. The other five points of the punch selector are available for use on the punch control panel.

CALCULATOR SELECTORS

The calculator selectors are located in the calculator, with the pickup controls in the punch. As the calculator

selectors are used to control calculator functions only, they must remain transferred during calculate time.

OBJECTIVE: To pick a calculator selector by an impulse from 12 through 9. The points of the calculator selector remain transferred until after the completion of calculation.

1. (8A) R87 picked from 1 hub.
2. (8A) R87 held by 87-1 and P33 until 13.
3. (8A) Calculator selector 1 (in 604) picked by P34 at 7.0 (or at 8 or 9 time for those two digits in the card) through 87-3 and EC49.
4. (8A) Calculator selector held by P35 and calculator selector hold points through EC57 until 0.0.

NEGATIVE BALANCE SELECTOR

The negative balance selector is designed to perform two functions: 1) to operate from the calculator when the proper signal is received during calculation, and 2) to furnish selection control, available on the punch control panel, during the punch cycle following the signal impulse.

OBJECTIVE: To pick a negative balance selector by a signal from the calculator. The selector remains transferred until the end of the punch cycle.

1. (8B) R164 picked through EC37 during calculation.
2. (1B) R164 held by P71 through the thyratron hold circuit EC129 until 9.4.

Checking Circuits

PRODUCT OVERFLOW

If there is a possibility that the result might exceed the field being punched, the product overflow feature can be used to signal that the amount overflows the card field provided for it. The possible overflow positions of the counter or general storage units are wired to the PRODUCT OVERFLOW IN. If any of these positions receive any impulse other than zero, the OUT hub emits an X impulse which may be wired to stop the machine.

OBJECTIVE: To signal that a number exceeds the field to be punched.

1. (6B) R35 picked by any impulse 1 through 9 from the product overflow IN hub through P39.
2. (6B) R35 held by 35-1 and P40 until 11.5 of next cycle.
3. (4A) PRODUCT OVERFLOW OUT hubs emit an X impulse from P30, 19-1, and 35-3 on the cycle following the pick of R35.

ZERO CHECK

The zero check circuit is used to indicate a non-zero balance when checking is done by subtracting a second result from the first to produce a zero balance in the counter. This circuit is effective only if it is programmed to operate.

OBJECTIVE: To cause the ZERO CHECK hub to emit an X to indicate a non-zero balance in the Counter when the Counter is tested for zero during calculate time.

1. (6B) R34 picked during calculate time by the zero check impulse from the calculator through EC66.
2. (1B) R34 held by P71 through the thyratron hold circuit EC129 until 9.4.
3. (4A) ZERO CHECK hub emits X impulse from P30, 19-1, and 34-3.

UNFINISHED PROGRAM

An unfinished program is one which is not completed by 12.7 on the punch index. On an unfinished program, all punching from the calculator is suppressed. Also, an X impulse is available at the UNFINISHED PROGRAM hubs to be wired to stop the machine if desired.

OBJECTIVE: To indicate if calculation is not complete by 12.7 and to suppress all punching from the calculator.

1. (6B) R32 picked by signal from the calculator at 12.7 time through EC65 if calculation is not completed.
2. (1B) R32 held by P71 and thyratron hold circuit EC129 until 9.4.
3. (4A) Unfinished program hubs emit an X impulse from P30, 19-1, and 32-1.
4. (1B) R32 N/C points open to remove plate voltage from all punching thyratrons.

Double Punch and Blank Column Detection

One method of checking a calculation is to re-run and re-punch the cards, using different electronic units and operations to perform the calculations. Impulses from the second reading brushes reading the punched answer columns are double punch and blank column checked on both passes. This will indicate missed punches (which show up as blank column) or differing answers (which show up as double punches).

DOUBLE PUNCH ONLY

OBJECTIVE: To indicate a double punched column in a card. The impulses from the reading brushes are wired to the DP and BC ENTRY hubs. Checking position 1 will be used as an example.

1. (5A) R116 picked by a punched hole through entry hub.
2. (5A) R116 held by 116-1 and P41 until 13.4.
3. (5A) R117 picked by 116-4, P43 and P42 at next mid-index point after R116 picked.
4. (5A) R117 held by 117-1 and P41 until 13.4.
5. (5A) R115 picked by second punched hole in the same column of the card through 117-2.
6. (5A) R115 held by 115-1 and P41 until 13.4.
7. (5A) R114 picked by 115-3 and P45 at 9.5.
8. (5A) R114 held by 114-1 and P35 until 0.0 of the next cycle.
9. (4A) DPBC OUT hub emits an X during the next cycle from P30, 19-1, and 114-3.

If the impulses from the second reading brushes are to be used anywhere else (such as to a punch magnet for gang punching) this extra use of the impulse must be taken from the DP and BC EXIT hub to eliminate a back circuit possibility. For an example of this back circuit, assume card columns 1 and 2 are wired to DP and BC positions 1 and 2 and also *directly* to punch magnets 1 and 2 for gang punching. Assume, also, that

columns 1 and 2 both have zero punches and column 2 also has a five punch. Relays 116 and 118 will both be picked at zero time and cause relays 117 and 119 to pick five teeth later. Both 117-2 and 119-2 will be transferred to the common error line. When the five hole is read in column two, the impulse will also flow through 119-2, along the common error line, out 117-2, and to the column 1 punch magnet, punching an extra hole. This situation is eliminated by wiring the punch magnets from the EXIT hubs.

BLANK COLUMN WITH DOUBLE PUNCH

OBJECTIVE: To indicate the absence of a punch in a column being checked. The control panel wiring is as discussed under Double Punch, but in addition the blank column switch hubs must be plugged for the columns being blank column checked.

1. (5A) R116 fails to pick because of absence of hole in card column being checked.
2. (5A) R115 picks at 9.3 from P44, blank column switch, and 116-2.
3. Circuit from this point is the same as steps 6 through 9 of double punch circuits, above.

BLANK COLUMN CHECK ONLY

OBJECTIVE: To check for blank columns but not cause error indications for double punches. Brush impulses from the columns being blank column checked only are run to the DP and BC EXIT hubs. BLANK COLUMN switches plugged ON for positions being used.

1. If R116 is not picked by a card impulse, the P44 impulse at 9.3 will pick the error relay 115 as discussed under "Blank Column With Double Punch."
2. If an impulse does pick R116, relay 117 will be transferred five teeth later through R116-4 and impulse from P42 and 43.
3. R117-2 points transfer and open circuit from EXIT hub. Further impulses into EXIT hub have no effect; so double punches will not be detected.

Error Stop

The 521 can be signaled to stop by an error indication impulse. The error may occur as a result of readings or actions from any of the three card stations and, by control panel wiring, cause the punch to stop after the card in error reaches the stacker. There is an entry hub for each of these card stations (6A): STOP FIRST READ, STOP PUNCH, and STOP SECOND READ. These hubs are impulsed from one of the error hubs (4A): UNFINISHED PROGRAM, ZERO CHECK, PRODUCT OVERFLOW, and DOUBLE PUNCH AND BLANK COLUMN DETECTION. The unfinished program and zero check impulses occur during the use of data read from the first reading station; they are therefore normally wired to STOP FIRST READ.

STOP FIRST READ

OBJECTIVE: To signal an error resulting from the use of data obtained from the first reading station.

1. (6A) R8 picked by error impulse (x impulse).
2. (6A) R8 held by 8-1 and P33 until 13.0.
3. (6A) R9 picked by 8-3 and P34.
4. (6A) R9 held by 9-1 and P35 until 0.0 of the cycle following the error impulse.
5. (6A) R10H picked by 9-3 and P36.
6. (6A) (R10 can also be picked through the pick coil by wiring STOP PUNCH).
7. (6A) R11 picked by 10-3 and P33.
8. (6A) R11 held by 11-1 and P33 until 13.0.
9. (6B) R12 picked by 11-3 and P34.
10. (6B) R12 held by 12-1 and P35 until 0.0 of second cycle following the error impulse.
11. (6B) R13 pick 2 coil energized by 12-3 and P36.
12. (6B) (R13 can also be picked through the pick 1 coil by wiring STOP SECOND READ).
13. (2B) R13 held by 13-1 and reset key.
14. (2B) R3 and HD relay hold circuit opened by 13-2 points.
15. (2B) Punch clutch cannot be energized if 3-3 points are open.

For an error impulse that results from an action at the punch or from data obtained from the second reading station, the corresponding stop hub is wired. This will make the punch stop after the card in error reaches the stacker.

Indicating Lights

Five indicating lights are mounted on the front of the 521. The idle light is on if the main line switch is on and cards are not feeding. The remaining lights signal an unfinished program, zero check, double punch blank column, and product overflow.

OBJECTIVE: To turn on the error indicating light if an error occurs and the control panel is wired to stop. Only the unfinished program light circuit is described. When wired, zero check, DPBC, and product overflow lights operate in a similar manner.

1. (6B) Unfinished program impulse picks R32 through EC65.
2. (6A) R8 picked by control panel wire from UNFINISHED PROGRAM hub to STOP FIRST READ hub.
3. (6A) R8 held by 8-1 and P33 until 13.0.
4. (2B) R15 picked by 32-2, 8-4, and P37.
5. (2B) R15 held by 15-1 and 8-2.
6. (6A, 6B) R9, 10, 11, 12, and 13 picked and held in succession as described under "Stop First Read." These relays provide a progressive hold circuit for R15 (2B).
7. (2B) Unfinished program light is in parallel with R15 hold circuit.
8. (2B) R13-2 drops R3 circuit to stop machine.
9. (2B) R13 held by 13-1 and reset key.

Calculator Controls

Timed impulses are given to the calculator from P cam contacts in the punch. The P cam contacts which are supplying impulses to the calculator usually have a 2500 ohm resistor connecting them to ground. These resistors keep the circuits from floating and draw enough current to burn off the oxide film which tends to form on lightly loaded contacts.

A punch cycle consists of a read and a calculate

position. P70 controls the read-in or read-out functions between 12.9 and 9.8. Calculation begins when P68 makes at 13.0 and R2 is de-energized by control panel wiring. Calculation time is limited by the duration of this same cam which breaks at 12.7.

Wiring CALCULATE ON supplies +48v to storage assignment hubs and P cams 7 through 13, 28, 65, 66, and 67 to control read-in and read-out functions. P29 is used as a signal to the calculator to test for the completion of the program. Thyratron anode potential is supplied through P18, 19, 20, 21, 71, and 72. Calculator circuits are reset by opening the —100v line with cam contacts in the punch.

Functions that are operative during calculate time are Punch time Reset before calculation starts by P49 and 50 in series. Functions that are operative during read-in and read-out time are Calculate time Reset by P48. Punch and Calculate Reset are named for the time at which they occur, not for the function they perform.

The unfinished program circuit is reset at the end of punching under control of P49. P47 and P51 through 54 are reset controls for read-in operations.

All of these timing circuits are discussed in connection with the electronic circuits in which they are used.

Appendix

SERVICE INFORMATION

PRESENTED HERE are some general service techniques which have proved helpful in field operation. In addition, the *CE Reference Manual* lists a number of specific servicing aids for particular operations. These should be read and understood in principle so the fact that there is a particular technique available will at least be retained. The details can always be obtained as needed from the *Reference Manual* (which should be in each machine).

The Neon Indicators

The neon indicating bulbs wired into the 604 circuits are a most valuable servicing aid for any failure which is consistent enough to fail in the KEY or the SINGLE CYCLE mode of operation. The failure of a bulb to come on or go off at the expected time can frequently narrow the area of possible trouble down to a half dozen or fewer pluggable units or tubes which can readily be substituted to pinpoint the exact failure.

Use of the Voltmeter

All triggers and a few other units are equipped with neon indicators so their operation can easily be observed. At times, however, it becomes necessary to know how other units not having an indicating neon are performing. The voltmeter can be used to determine this.

If a plate output unit is conducting, the plate output voltage should be low, in the range of plus 40 to plus 50 volts. If the unit is cut off, the voltage should be about plus 140 to plus 150 volts. Weak tubes will not produce as low a conducting condition potential. Shorted tubes will produce a lowered cut off condition potential. Some types of defective units will also be revealed with the aid of the voltmeter. This type of trouble analysis is generally limited, however, to circuits that are resistance (not capacitance) coupled. The plate output voltage of a resistance coupled inverter or power unit will remain at the low (plus 40 to plus 50 volt) level as long as the input level is high, and vice versa. These output voltage levels can be observed by connecting a voltmeter between the plate output pin and ground and then raising or lowering the voltage at the input pin (such as by keying the machine through a program step).

Cathode followers do not invert signals, and some types of units use and produce different voltage levels than others, but the use of the voltmeter will still indicate normal or abnormal operations. Weak or shorted tubes or defective units will not produce specified output levels. Whenever a wrong output is discovered, it is wise to check the input level to the unit to make sure the trouble is not coming from that source.

The Oscilloscope

The neon indicators and a voltmeter can be used with good effect on most routine troubles in the 604; but when an intermittent or involved trouble develops, the oscilloscope can save hours of time. As facility is developed in the use of the oscilloscope, even simpler troubles can be more efficiently located. The scope can indicate developing troubles during preventive maintenance long before they affect machine performance.

The voltmeter cannot be used in conjunction with capacity coupled units or circuits *receiving pulses* from capacity coupled units because these pulses are too short, even on KEY, to cause a deflection. The oscilloscope is not subject to such a limitation.

Meters can be damaged through wrong scale settings. The oscilloscope is immune to such damage with voltage levels such as found in the 604. An oscilloscope set for DC operation may be accurately voltage calibrated by adjusting the vertical gain control to cause a particular amount of deflection when the scope probe is touched to the output of one of the five 604 power supplies. The scope may then be used as a DC meter so long as the vertical gain is not altered. By going to the AC input setting of the scope the amount of AC signal present, completely free of interaction from any DC level on the line, may be measured (such as when checking for ripple on the DC supplies.)

Distorted waveshapes, indicative of trouble, are quickly spotted through the use of the scope where they can be detected in no other way. In short, the oscilloscope

is an excellent tool. Its use should be learned during simple calls and preventive maintenance work so its full value can be realized when a difficult trouble must be quickly fixed.

Most oscilloscope usage requires a constantly repeated operation to give a most readable indication. Causing the 604 to constantly repeat one program step (the failing one) is usually arranged quite easily.

Different oscilloscopes have different operating features. These should be learned from the instruction material supplied with the oscilloscope available. Fundamentally, an oscilloscope extracts a small portion of time and presents on its scope face the voltage happenings at a particular circuit point during that time. With electronic calculators such as the 604 it is not just the presence or absence of a signal which is of interest; the time of the signal is just as important. For this reason the "Externally Synchronized" connection of the scope is most useful. A sync input signal is obtained from the machine circuits and is used to cause the cathode ray beam to start its sweep across the scope face at exactly the same time each machine cycle (such as at 2AB, for instance). Knowing the time at which the sweep starts, and the speed with which the sweep moves across the face (which is variable in most scopes), the 604 "index time" at any point in the scope picture can be determined. The external sync pulses are usually taken from near the Primary Timer, *but not from the triggers themselves.* Instead, the output from an inverter or power unit driven from the Primary Timer should be used. In this way the normal operation of the 604 will not be upset by the sync extraction process.

Oscilloscopes having a triggered sweep (such as the Tektronix 310 or the IBM modified Waterman) as opposed to a free running sweep have a definite advantage in that the sweep will only start when impulsed to do so. With such a scope a sync pulse can be taken from a particular column shift control line, for example, to present the first cycle of a multiplication or a division or other operation in that shift. No other signals, present at other times at the circuit point being investigated, will be seen because there will be no sweep.

These and other techniques will be developed and used as the use of the scope becomes more familiar.

Practical Waveshapes

The circuit descriptions within the text of this manual usually assume that theoretically perfect waveshapes are involved, that is, waveshapes having a zero rise time, square corners, and perfectly flat levels in between shifts. Such waveshapes are seldom found in practice in the 604 or elsewhere. Slopes on the leading and trailing edges of signals (finite rise and fall time), rounded corners, level fluctuations, and noise are usually seen. Electronic calculators are designed to ignore these conditions, *within limits,* and to perform as though the signals were perfect. When analyzing machine operation it helps to know what actual signal shapes to expect. For this reason the following illustrations of practical signals found in the 604 are included.

The pictures illustrate what will be seen within the 604H, and within the 604G and earlier types of machines, as noted, while using a Tektronix 310 oscilloscope or equivalent. Some variation is to be expected among machines of even the same suffix, but these variations should be minor in nature. It is helpful, however, to become acquainted with the signal shapes within any 604 assigned to you *before* trouble develops. This is readily done by using the oscilloscope during preventive maintenance. Besides being an excellent technique for locating potential trouble before it affects customer operations, periodic oscilloscope usage develops a familiarity with the instrument which will be found helpful in many areas of field trouble analysis. 604 troubles, or potential troubles, will most frequently be observed as an incorrect signal DC level, an incorrect signal amplitude, a greatly altered signal shape, or fluctuating signals. Such conditions are frequently impossible to note with a meter or by neon bulb activity, but show up readily on the face of the scope. The occasional trouble which causes excessive corner rounding or excessive rise or fall time can cause intermittent trigger flipping failures. Such troubles can also be interpreted from the oscilloscope presentation.

A number of Waterman Pocketscopes, Model S-11-A, are available in the field as IBM branch office tools. These were the first oscilloscopes extensively supplied to the field by IBM. They are useful instruments, *but the pictures they display will frequently be quite different from those shown by the Tektronix.* The Waterman scope has a frequency response which begins to fall off at about 250kc where the Tektronix 310 extends out to beyond 4 megacycles. The restricted frequency range of the Waterman tends to round over corners of some signals. The overshoot characteristics of the S-11-A mask this rounding on sharp signal changes and instead frequently produce a peak on the leading and trailing edges of the signal shifts. A comparison of the same signal seen on a Tektronix and a Waterman oscilloscope is given by the first pair of the following illustrations.

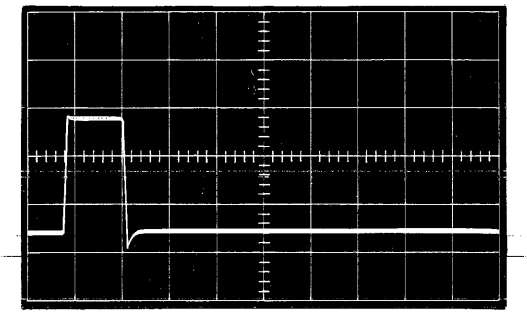

TEKTRONIX

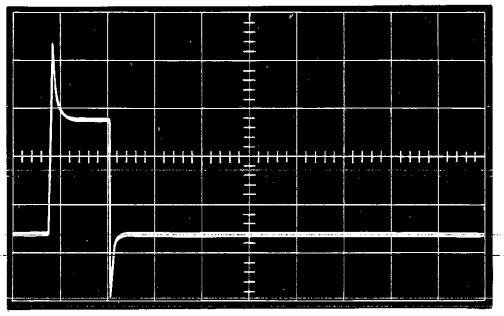

WATERMAN

H suffix + (3A-8B) G as seen on Tektronix and Waterman scopes. This pair of pictures shows how oscilloscope characteristics can affect the presentation of a waveshape.

The following pictures show certain practical waveforms as the 604 reads a minus (true) 8 out of the Counter and into a Storage Unit on a locked program operation. A 2AB pulse was used to sync the sweep. The trace therefore starts at the left of the picture at 2A.

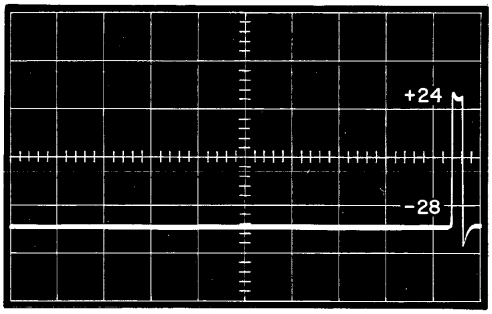

H SUFFIX +1B PULSE
CATHODE FOLLOWER OUTPUT

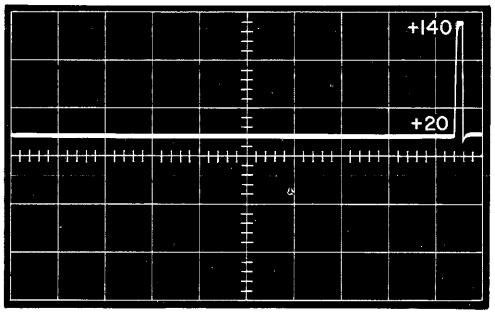

G SUFFIX +1B PULSE
POWER UNIT FULL PLATE OUTPUT

These pictures are typical of most 10μ second pulses found in the respective machines. The "bounce" on the top and the slight overshoot on the trailing edge are common in the amounts indicated.

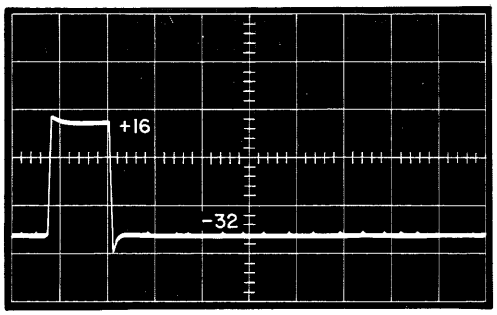

H SUFFIX (3A-8B) G
CATHODE FOLLOWER OUTPUT

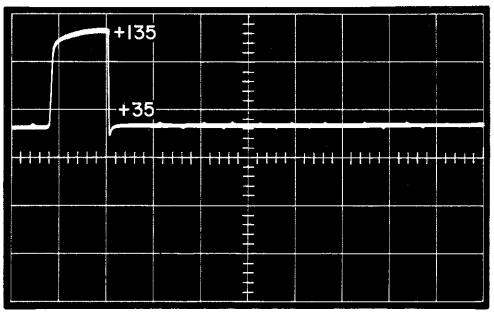

G SUFFIX +(3A-8B) G
INVERTER UNIT FULL PLATE OUTPUT

The 3A-8B Reset Gate found in the H suffix is usually nearer to the theoretical waveshape than that found in the G suffix. Some variation will be found within the machines depending upon where the signal is examined. The rounding on the G suffix gate causes no trouble unless it becomes considerably worse than illustrated.

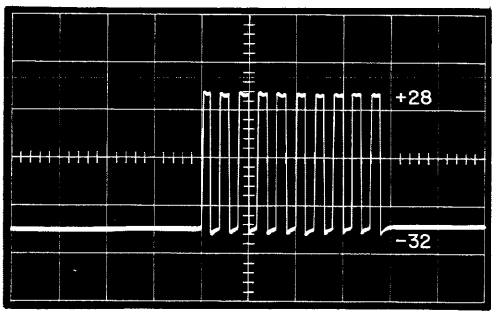

H SUFFIX +(11A-20A) P
CATHODE FOLLOWER OUTPUT

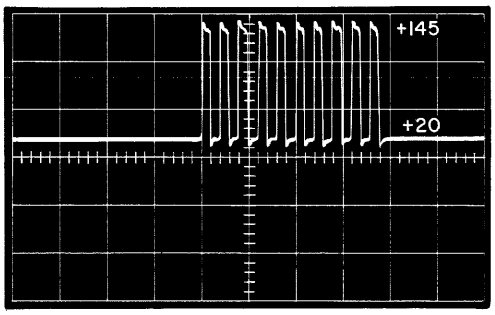

G SUFFIX +(11A-20A) P
POWER UNIT FULL PLATE OUTPUT

The + (11A-20A) pulses are used throughout the machine for unit roll-out. These pictures show typical outputs for the respective machines from the common pulse selector circuits which feed the pulses to all the units. These pulses are very convenient to use for checking the oscilloscope and adjusting the time base calibration so the time at any point on the trace can be determined from the grid lines usually found on the scope screen.

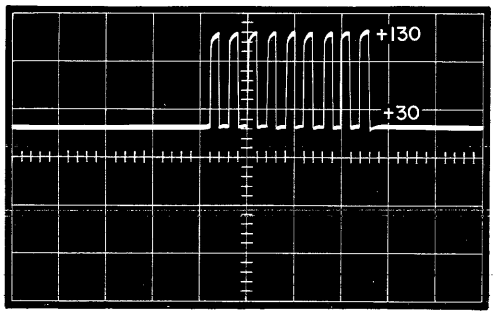

H SUFFIX +(11B-19B) P
INVERTER UNIT FULL PLATE OUTPUT

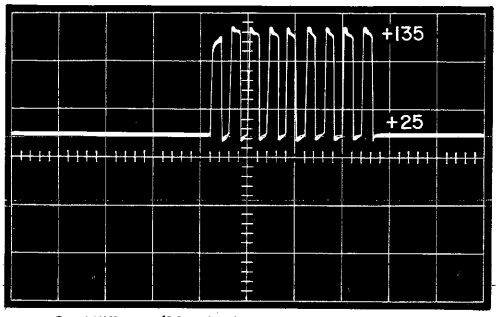

G SUFFIX (11B-19B) P
POWER UNIT FULL PLATE OUTPUT

The 11B-19B pulses are controlled by the Add-Subtract switches to feed the entry channels with the proper number of them for the digit being transferred. The signals shown are typical as seen at the output of the common pulse selection circuit. The slightly weaker first pulse (as seen in the G suffix picture above) is frequently found here and elsewhere in the G suffix (and occasionally in the H suffix) where strings of pulses are involved. It is due to line charging effects. Unless excessive it causes no trouble. Where noticed, however, it is important to check that the full *time interval* of the first pulse is getting through. Delayed gates can chop part of a pulse and this will cause troubles.

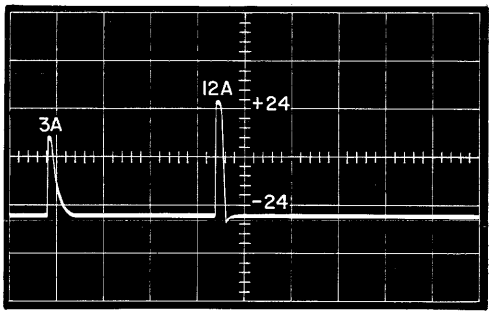

H SUFFIX TYPICAL COMMON
EXIT CHANNEL
(TRANSFER OF A DIGIT 8 SHOWN)

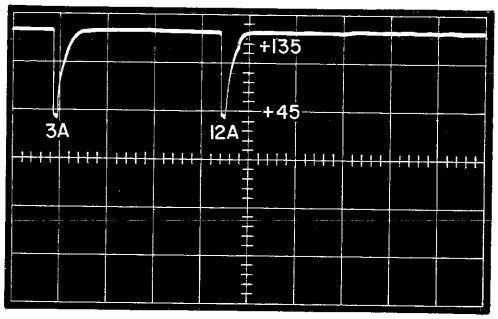

G SUFFIX TYPICAL COMMON
EXIT CHANNEL
(TRANSFER OF A DIGIT 8 SHOWN)

The left pulse is at about 3A time and comes from the *receiving unit* as a result of its resetting to zero prior to read-in. The pulse may or may not appear, depending largely upon the figure in the receiving storage assembly prior to reset. The sensitivity of the triggers is also a factor. The right hand pulse occurs when the *sending unit* storage assembly goes from 9 to 0 at some approximate "A" time and is the one used by the Add-Subtract Unit. (For the transfer of an eight, shown, it is the 12A pulse that rolls the sending unit from 9 to 0 and generates the exit channel pulse. For other digits there are other times.) Notice the spiked shape of the reconstructed, approximate "A" time pulses (more obvious on the G suffix). Notice the opposite polarity found on the H and G machine common exit channels.

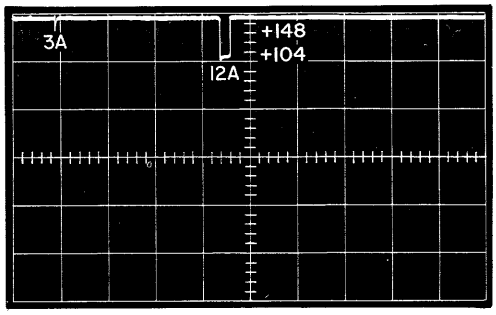

H SUFFIX TYPICAL COLUMN SHIFT TRIODE SWITCH OUTPUT.

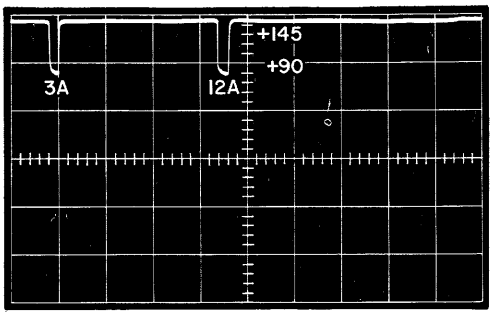

G SUFFIX TYPICAL COLUMN SHIFT PENTAGRID SWITCH OUTPUT

These are typical waveshapes fed from the Column Shift Unit to the Add-Subtract triggers to cause them to flip at some particular approximate "A" time depending upon the digit being transferred. Both the H and the G machines use negative pulses at this point.

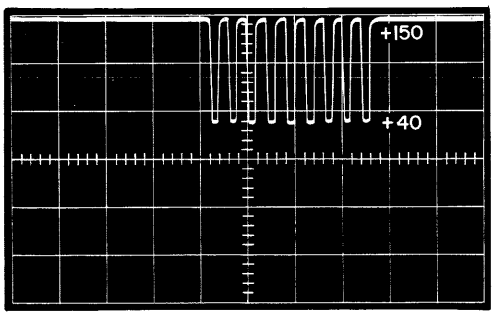

H SUFFIX ADD-SUBTRACT INVERTER SWITCH LEFT UNIT GRID. - (11B-19B)P. (THIS IS A POWER UNIT FULL PLATE OUTPUT)

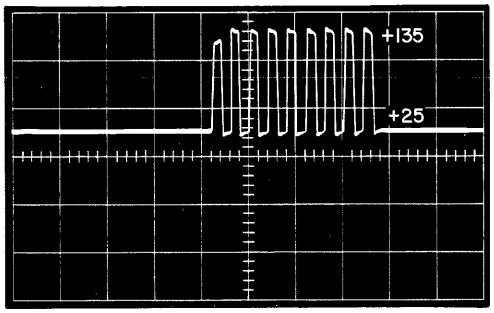

G SUFFIX ADD-SUBTRACT PENTAGRID SWITCH GRID THREE. +(11B-19B)P. (THIS IS A POWER UNIT FULL PLATE OUTPUT)

These are the pulses directly controlled by the Add-Subtract switches to feed the entry channels. The loading of the circuit, caused by the many units being driven in parallel, increases the rise and fall time. As a result, the pulses have sharper peaks with very little flat level during the active time of the pulses.

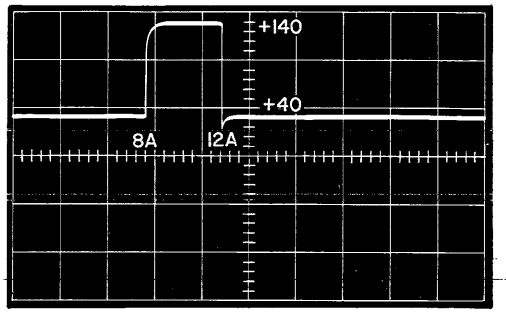

H SUFFIX ADD-SUBTRACT INVERTER SWITCH RIGHT UNIT GRID. (FULL OUTPUT FROM LEFT PLATE OFF ADD-SUBTRACT TRIGGER).

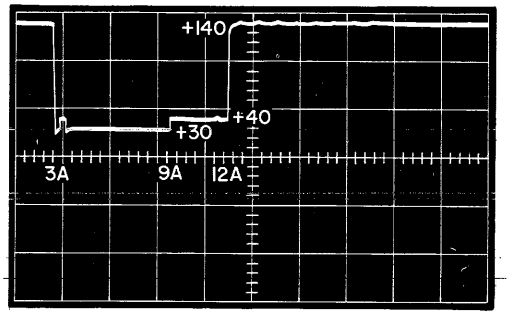

G SUFFIX ADD-SUBTRACT PENTAGRID SWITCH GRID 1. (FULL OUTPUT FROM RIGHT PLATE OF ADD-SUBTRACT TRIGGER.)

With the H suffix machine the Add-Subtract triggers are plate pulled OFF at 8AB. The left plate goes positive. At 12A (for the true transfer of an 8) the grid input pulse flips the trigger off. The resulting low level at the left plate cuts off the right half of the Add-Subtract inverter switch.

In the G suffix machine a more unusual waveshape is seen. The analysis will be made from 12A time through the end of the cycle and back around to 12A again. Since this is a true transfer, the A-S trigger goes ON at 12A, and the OFF side plate voltage rises from 40 to about 140 volts. This condition continues through the end of the cycle until 3A of the next cycle, at which time the reset inverter goes into conduction and flips the trigger OFF. There are then two triodes conducting in parallel, i.e., the OFF side of the trigger and the reset inverter, causing their common plate voltage to drop to 30 volts.

Shortly after 3A the reset spike coming over from GS2 attempts to turn the trigger ON, but it cannot, thus producing the pip from 30 volts to 40 volts. At 9A the reset inverter stops conducting, leaving only the OFF side of the trigger in conduction. With one triode conducting instead of two, the plate voltage rises from 30 to 40 volts, due to decreased current in the plate resistor. The plate voltage stays at 40 volts until the trigger turns ON at 12A, at which time the plate voltage rises to 140 volts. Thus nine B pulses are gated by a 12A to 3A gate. This should result in an output of eight pulses from the A-S switch.

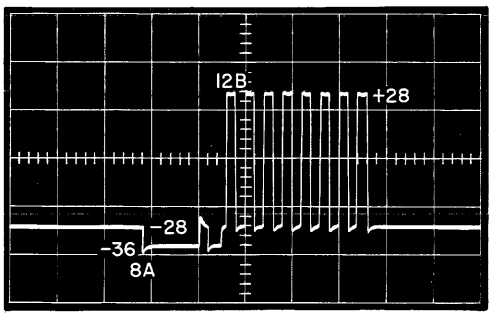

H SUFFIX TYPICAL ENTRY CHANNEL SIGNAL. CATHODE FOLLOWER OUTPUT LEVEL. (TRUE TRANSFER OF AN 8 SHOWN.)

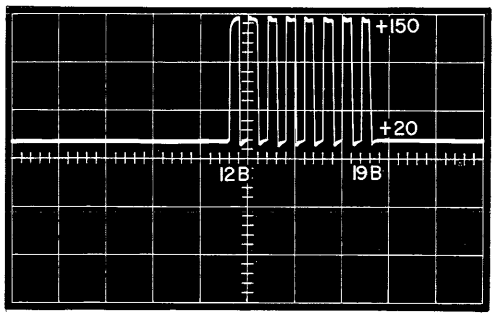

G SUFFIX TYPICAL ENTRY CHANNEL SIGNAL. POWER UNIT FULL PLATE OUTPUT LEVEL. (TRUE TRANSFER OF AN 8 SHOWN.)

These are the types of signals which flow down the common entry channels to be made available to all units in the machine. The operation of the H suffix inverter A-S switch as one or both of the sides conduct can be seen on the H suffix waveshape.

The Test Probe

The test probe is very valuable in working with the calculator. A .05 mfd capacitor runs from the capacitor probe jack (on the outboard test panel) to ground. When the test probe is plugged into this jack, it can be used to turn triggers on and off manually, feed pulses to circuits, swamp out pulses, etc. To turn a trigger ON, ground the test probe momentarily to discharge the capacitor and then touch the test probe to the left plate unit socket pin or to the grid connection pin for the right side. Either method will cause the trigger to be turned ON, but one or the other may be more useful in some instances to prevent circuit interaction to triggers other than the one desired. For example, when several triggers share a common grid connection, they will all be turned on if the probe is applied to the grid of any one trigger. However, if the desired trigger is turned on by applying the probe to the plate pin, only the one trigger will be flipped.

A trigger may be turned OFF by applying the probe to the opposite grid or plate connection to that used for turning it ON. If the probe does not produce an action, momentarily ground it to the machine frame to discharge the capacitor.

If it is desired to put a voltage charge on the probe for some reason, obtain the charge from some unit pin which connects to the desired voltage source through a unit resistor. Obtaining the charge from a point running directly to the power supply output (such as the terminals on the 604 fuse panel) will cause a dip on the voltage line which can flip triggers throughout the machine.

The Counter or any Storage Unit can be manually reset when desired by touching a discharged capacitor probe to the corresponding reset line adjusting potentiometer terminal. The correct terminal is the one to which runs the white wire with the green stripe.

Test Control Panel Programs

In the interests of standardization and to help in trouble analysis, several test control panels have been developed. These are known as Customer Engineering Test Panels; and the step by step programming, results, and card punching are given in the *CE Reference Manuals* for the 604. The points of particular note about these tests are: 1) the results are the same as the initial data fed into the 604; 2) Zero Check steps are included at strategic locations to aid in localizing the failure; and 3) the figure "56789" in the MQ Unit remains unchanged after the completion of any program step unless a failure occurs. If a failure does occur, the MQ Unit figure will be permanently altered and can be immediately noticed even if a Zero Check does not occur.

Due to the "results the same as input data" design of these tests, locked ring operation (where the program ring is looped from the last step back to the first) is made possible for bias and frequency testing. Locked ring operation also reduces the time needed to localize an intermittent failure in the 604, free of interaction from the 521. While using the locked ring mode of operation, the 604 is not held down by the 521; it can therefore do over five times as many repeated calculations as would be possible with normal operation. Since calculations are continuous, the large "read in-read out" dead time gap is eliminated; this greatly facilitates oscilloscope usage. Techniques are described in the *Reference Manual* for locking in on very small program loops once a failing area is localized. Such an approach increases many times the "failure opportunities" for operations called for within the small loop.

Bias and Frequency Testing

There are two basic types of tube failures. With the first type the tube fails without warning, usually because of a burnt out filament or interelectrode short. With the second type of failure the tube or component deteriorates gradually with use and eventually fails to function. Failures in this second class can often be located before the development of customer trouble by means of the bias and frequency tests. Bias testing produces a more marginal operating condition and often shows up tubes with weakened emission or with cathode "hot spots" which produce a loss of grid control. The frequency test is less important than the bias test but is readily run and will occasionally reveal component or tube failures not produced by other tests.

The condition of tubes, units, and components can rarely be determined by visual observation. It is not practical to remove large numbers of either tubes or units for individual inspection or testing unless they are suspected of being defective. The condition of these parts can instead be determined, while in the machine, by varying the bias voltages and the frequency. The calculator should continue to function correctly when the minus 100 volt supply is varied between minus 90 and minus 110 volts, or when the minus 250 volt supply is varied between minus 230 and minus 270 volts. The machine should also perform correctly when the frequency is raised to 70kc, or reduced to 30kc (or as low

as the calculating time of the problem permits). These techniques are useful both for preventive maintenance and for service calls and can be used both with the locked ring operation mode and with the normal punch running condition (note that only with the punch running is it possible to bias check the input-output circuits).

Not to be used as a preventive maintenance procedure, but occasionally useful for increasing the incidence of intermittent failures, is the technique of slightly varying the 215 CV line (and all the voltages it controls). The range of variation is increased if the action of the HI-LO detector is nullified by blocking R-8 so it cannot pick. The range of variation used should never exceed plus or minus one-half volt on the 6 volt filament line, and the voltage should not be left at the shifted level for any extended length of time. If the failure is not made more obvious within five minutes, another technique is called for.

Vibration Testing

The purpose of this test is to locate and force to fail any microphonic tubes, tubes with intermittent internal shorts, broken or cold soldered joints in the pluggable unit or panel wiring, spread socket connections, poor grounds, and loose interpanel connectors. These conditions can give highly intermittent and elusive troubles which are almost impossible to detect or localize by any other means. It should not be used as a routine preventive maintenance measure since the technique can actually cause troubles to develop if used excessively, but as a *service* technique it is invaluable.

There are two ways to run this test. Either or both may be used depending on the nature of the trouble. The punch may be running in the normal way or the machine may be in the locked ring operation mode with the punch stopped. The input-output operations can only be checked with the punch running but the locked ring operation is much more sensitive and revealing for checking the calculating circuits.

When using the vibration test on a locked ring type of operation, the programs should be arranged so an error will cause a permanent change in the results. This change should be visible on the indicating neons. The IBM 604 Test Control Panels are arranged in this way. If the failure is somewhat localized to a particular operation, another way of running the vibration test is to lock in on a single similar program step which will be repeated constantly. The scope face can then be watched for signal fluctuations. With these approaches the error can be detected by shaking the gates and panels and subjecting them to vibration. By gradually localizing the vibration the physical area of failure can be determined.

After the broad area of failure is determined, the best way of continuing the test is to work on one unit at a time. Remove only one (or perhaps several) horizontal unit retaining strips (to prevent air flow loss and overheating). Tap each individual unit handle with the tape wrapped handle of a medium screwdriver. This test will show up shorting tubes, poor grounds, and spread socket connections both in the tube sockets and in the unit sockets. Using a locked ring with the IBM Test Control Panels, the MQ Unit should not change its value during this procedure. If it does, it is an indication that an error was made.

After the panels have been tested, the cables can be joggled to test them for any open or short circuit possibilities.

After a vibration test has been completed, the machine should be returned to the normal mode of operation. The punch should then be run with cards to test the read-in and read-out circuits. The 604 bias voltage should be varied within the given limits while this is done. It is important to check that the vibration has not put on any additional troubles which did not show up on the locked ring operation.

Twist Technique

In addition to the vibration principle, there is another service technique which can be used to good advantage in finding poorly soldered connections, bad grounds, short circuits between pluggable unit components and other troubles of this nature. This technique consists of twisting each individual unit back and forth slightly in its socket. The unit should not be twisted too far, as it is possible to loosen units in this manner.

This method of twisting may be used when the vibration test indicates a trouble, and the specific unit causing the trouble cannot be located. Usually, if all units in the suspected area are twisted, only the defective unit will cause the calculation to go wrong. If intermittent machine errors are encountered and no definite cause can be located, it may be advisable to use the twist principle on all units in the machine; first, using the locked ring principle, and second, running cards through the punch.

If a spread socket pin is found, it is not neccesary to replace the entire socket. Single pin replacements can be taken from an unused socket. Spare pins can be stocked by ordering part number 303644.

Visual Inspection

Highly intermittent troubles can at times be found by making a visual inspection of the back panel wiring. A bright light which can be held in the hand is very helpful in making a careful check of hard-to-see connections. Every unit socket on every panel should be examined. The time spent for a visual check of this nature can in some instances save a lot of future time on service calls. During this inspection any unusual conditions should be investigated. The following points should be watched for in particular:

1. Connections which have been poorly soldered, "cold" soldered, or not soldered at all.
2. Shorts or close clearances between wires or pins.
3. *Plastic wiring* which has melted or fused together causing a short or intermittent short. Stray pulses and noise can also be caused by this condition.
4. Loose connections where a wire enters a terminal block connection.
5. Incomplete insertion of units into sockets.
6. Poor connections on the network which feeds the filament voltage.
7. Chafing or breaking of the cable near all corners.

Pluggable Units

When the failing unit is located, a new tube should be tried before replacing the entire unit. Tube failure will be found to account for most 604 troubles. When a unit is known to be defective, it should be replaced with a new one. Pluggable units are built from carefully tested, computer quality components. In many cases these parts are "pair matched" to within 2½%. Because of this, units should not be field repaired except in an emergency.

If it is necessary to replace a power unit with an adjustable tapped output, or the 6AQ5 tube in such a power unit, it will be necessary to readjust the tap. The voltage between the output tap and ground should measure about +100 volts with the tube conducting and about +150 volts with the tube cut off. This setting will give the desired 50 volt output shift. A voltmeter and the KEY mode of operation may be used to measure these levels with resistance coupled input power unit, but with those units, such as the PW-6, having a *capacitor input* a different technique will have to be used. An input capacitor will not couple an input signal for long enough to get any reading variation on a meter. An oscilloscope may be voltage calibrated and then used, with the machine in the locked ring mode of operation, to dynamically check the tapped output level of such units.

Occasionally several power units share part of the same load resistor in one of the units. In these instances adjusting the tap of the "common load" unit will necessitate readjusting the other unit resistor as well. For example with the G suffix 604 the power unit at 5-10K has part of its load resistor also used by 3-7E. 3-1C has part of its load shared by 1-10K. In such cases the principle is to first set the load resistor tap in the unit supplied directly from the plus 150 volt line (5-10K and 3-1C in the examples given) before adjusting the "parasite" unit.

Soldering

When soldering connections on electronic equipment, use only rosin core solder (or an external pure rosin flux and coreless solder). Solder supplied by IBM is of this type. **The use of any flux other than pure rosin will cause serious damage.** Flux other than rosin remaining on the work after soldering has been completed (or which runs down into the work while the soldering is being done) gradually corrodes the metals at the point of contact. Contact resistances build up and some joints even develop semi-conductor properties with the passage of time. Troubles of a nature extremely difficult to analyze often result. The same things can be true of joints improperly made even when rosin core solder is used.

The following items should be noted to obtain good, clean soldered joints:

1. Keep the working surface of the soldering iron clean and covered with a film of molten solder (that is, well "tinned").
2. Have the soldering iron at the proper temperature. Don't try to use the iron too soon after it is plugged in or its temperature will be too low. Don't leave an iron plugged in and unused for too long or it will get too hot. The tinned surface of an iron at the proper temperature will be almost mirror-like and will stay that way for about a minute when wiped with a dry cloth. If the iron is at the correct heat, the solder will flow into and around the joint easily and will "wet" both pieces of the work.
3. Use only rosin core solder, and solder with at least a 50% tin content.
4. Be sure the joint is clean and free of oil, etc.
5. Apply the soldering iron to the joint, let the heat flow into the joint until the joint itself will melt the

solder, and then *apply the solder to the joint, not to the iron.* While the joint is heating, keep touching the solder to it. As the temperature rises, the flux will flow over the joint and clean it, followed by the molten solder which flows into all the crevices (which are hot) and produces a good electrical and mechanical joint. This is the reason for applying the solder to the joint, not to the iron. By constantly "testing" the joint temperature with the solder during the heating process there will be less tendency to overheat and "burn" the joint.

6. Do not move the joint until the solder hardens.

Good soldering produces a smooth, even coating and gives the appearance of flowed-on solder. A poorly soldered joint is lumpy, cracked, or grainy gray in appearance, usually indicating insufficient heat at the joint during soldering or motion of the joint during cooling. Such joints must be redone.

General Service Procedures

In order to locate trouble occuring only at high speed on a complicated control panel it may prove advantageous to remove the *tube only* from some program ring trigger unit. This will stop the calculation at that point in the problem. Checking the answer at this point will prove the accuracy of the calculated steps up to the one removed.

At times it is necessary to determine whether the difficulty is in the 604 or in the 521. If a second punch unit (wired to the same diagram, special features, etc.) is available, it may be substituted temporarily. This will frequently point the way to the failing machine unit.

There are other methods which are useful, such as:

1. Use of the locked ring mode of operation. With the CALC START button held depressed on the outboard test panel the punch is run a cycle to read in data. This data is checked for accuracy. Then the CALC START button is released to permit the start of continuous calculations. If calculation errors develop with the punch not running, the fault will usually be found in the 604. If no troubles show up, the fault may well be in the 521 or in units which operate or reset from the punch (such as the calculate start-stop circuits, Counter reset from punch circuits, etc.).

2. A control panel can be wired where the Storage Units which are read into from the punch are not used except for *read out* during calculation. The punch can then be run a cycle to read in data. The wires from CARD CYCLES to the unit READ-IN hubs on the 521 control panel can then be removed. This will prevent new information from reading into the calculator. If the punch is now run continuously, the calculations will be repeated using the same data for each card. If the failures disappear, read-in circuits should be suspected. If failures persists, the 604 calculating circuits or the 521-604 interconnecting circuits should be checked.

Zero Check and Unfinished Program Test

In any circuit where several tubes in series are used to indicate a machine error, two conditions of failure may occur. First, a failure may cause the circuit to indicate a false error on every cycle. This means that the condition will be observed immediately by the operator and can be corrected. A more serious trouble occurs when the failure causes the circuit to be inoperative, i.e., it does not indicate an error even though there is one present. A condition such as this may be present for some time without detection. Because of this possibility it is very necessary to test thoroughly both the zero check and unfinished program circuits.

The zero check circuit is tested by forcing an error on every punch cycle and by observing that R34 in the 521 Punch picks up every machine cycle. A standard test control panel is used (without locking the ring). Remove the wire from CARD CYCLES to either FS1, 2, 3 or 4 READ-IN on the 521 control panel. Remove the wire from ZERO CHECK to STOP 1st READ. With the punch running, watch to see that R34 picks every cycle while varying the bias on the calculator.

The Unfinished Program circuit is tested in much the same manner as the zero check circuit. Modify the standard 521 control panel as follows: Remove the wire from UNFINISHED PROGRAM to STOP 1st READ. Turn the range switch on the calculator to SINGLE CYCLE. R32 should now be observed to see that it picks up every cycle, while varying the bias on the calculator.

Electronic Reset Lines

There are ten separate Electronic Reset Units and reset lines in the 604, one for each of the ten digital storage units. It is important that each of these ten lines equal the —100 volt DC *supply line.* These lines are individually adjusted by separate potentiometers mounted amidst the panel wiring. A good way to adjust these is to connect one lead from a voltmeter to the —100 volt DC power supply output line and to touch the other lead to the reset line being checked (this is a white wire with a green stripe which runs to one of the outside terminals on the potentiometers). Using a 150 volt or higher meter

scale to start, adjust the potentiometer until no meter deflection is seen, and then switch down to the lower, more sensitive meter scales and repeat the procedure until the final, closest null is obtained. This will give maximum accuracy with maximum safety to the meter in case the initial adjustment is far out or the wrong connections are made.

Reset potentiometers have been known to get vibration sensitive and cause erratic failures. This condition can largely be prevented by simply turning the potentiometer adjustment rapidly back and forth through its entire range several times before starting each adjustment procedure. A "noisy" potentiometer can be detected by connecting an AC oscilloscope between ground and the reset line being checked. Gently rapping the potentiometer with a screwdriver handle should produce no flutter on the reset line.

Multivibrator Frequency

The operating frequency of the multivibrator is best determined by counting the number of times a 1 can be entered into the Counter in exactly one minute. Since only one entry can be made to the Counter for each Primary Timer cycle, and since the number of multivibrator cycles needed to cause the Primary Timer to go around once is the same as the number of triggers in the Timer, the frequency of the multivibrator can be determined. A set-up procedure for this checking method is as follows:

Wire a control panel to EMIT 1 and COUNTER READ IN MINUS from PROGRAM EXITS 1. Turn the operation (mode control) switch to SINGLE CYCLE. Run the punch a cycle (with or without cards). Single cycle the machine to program step 1. Turn on the PROGRAM LOCK SWITCH on the H suffix or manually "tweak" ON the Program Advance Suppress trigger at 2-8H for the G and earlier suffix machines. Hold the CALCULATE START button depressed while flipping the operation switch to HI. Start timing exactly 1 minute when the CALCULATE START button is released. At the end of 1 minute quickly flip the operation switch back to SINGLE CYCLE. A number will now be found stored in the Counter in true form. Tests should be run at 50kc, 30 kc, and 70 kc. The following table gives the correct results in the Counter for machines having a 24 step ring (H suffix) and those having a 25 step ring (G and most earlier suffixes):

	24 Step Ring	*25 Step Ring*
30kc	75,000	72,000
50kc	125,000	120,000
70kc	175,000	168,000

If it becomes necessary to change the calibration of the dial, the shaft nut holding the potentiometer to the outboard test panel should be loosened. The potentiometer may then be shifted as necessary to make the pointer knob indicate 50kc at the proper point. (A flat side on the potentiometer shaft prevents setting the calibration simply by shifting the pointer knob on the shaft.)

Available Electronic Cycles

Many times it is advantageous to know the number of electronic cycles available in the 604. The total number available for calculations will depend on the speed of the multivibrator, the speed of the punch, the percentage of punch cycle time available for calculating, and the number of steps in the Primary Timer ring. Under normal condition the 521 will allow approximately 240 cycles for a 24 step ring (such as in the H suffix) and 230 cycles for a 25 step ring (such as in the G and most earlier suffixes). Any great discrepancy can be traced to the speed of the punch or the multivibrator, or an incorrect timing of the calculate time control cams. The multivibrator speed must not be set above 50kc for normal operation. If more time is needed for calculating, the punch can be adjusted for a slower speed on a written request from the customer.

The following formula will give the theoretical number of electronic cycles for any set of conditions:

$$\frac{60 \times \text{Punch Index Degrees, Teeth, or Cycle Points Available for Calculating*} \times \text{Multivibrator Frequency Cycles per Second}}{\text{Punch Speed in Cards per Minute} \times \text{Degrees, Teeth, or Cycle Points In 1 Revolution of Punch Index*} \times \text{No. of Stages in Primary Timer}} = \text{Number of Electronic Cycles Theoretically Available}$$

*Both these items must be in the same units of measurement.

The following method may be used to find dynamically the number of cycles available in any 604 calculator and punch system:

a) Remove the Unfinished Program Thyratron Unit.
b) Remove the Program 1 Trigger Unit.
c) Wire the PROGRAM 1 control panel exit hubs to EMIT 1 and CTR RI MINUS.
d) Wire the punch to CTR RO & R and punch results from the COUNTER EXIT hubs to any punch magnets.
e) Run blank cards through the punch.

The total punched in the card will be the number of available electronic cycles within the subject machine. If all zeros are punched, it may be an indication that the card cycles cam is making incorrectly before the unfinished program test cam and clearing the Counter.

INTERNAL NEON INDICATOR CHART 604 H SUFFIX

PANEL I

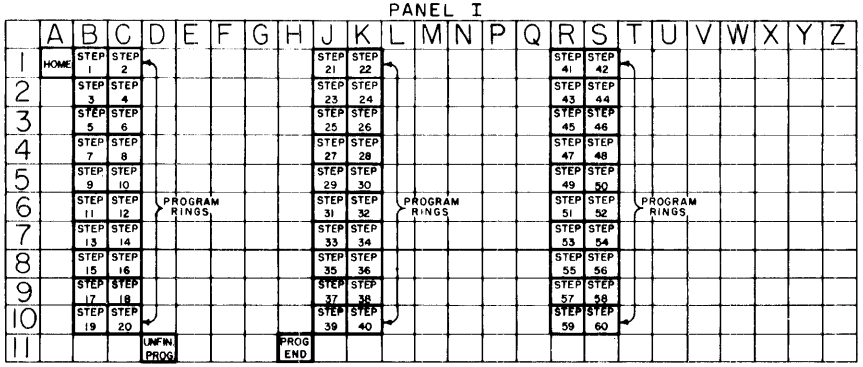

PANEL III

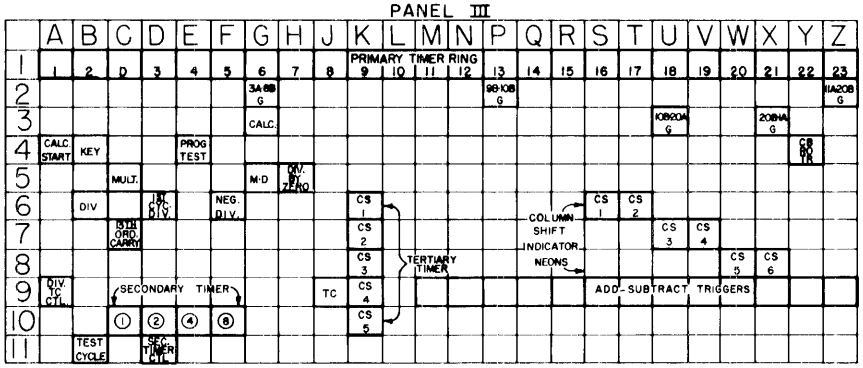

PANEL IV (FACTOR STORAGE)

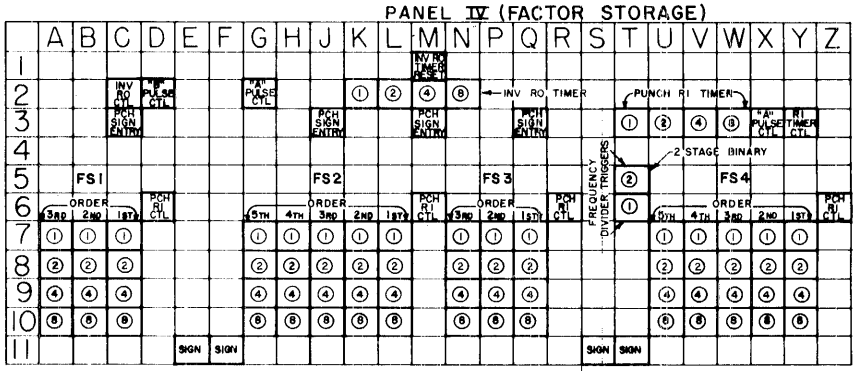

PANEL V

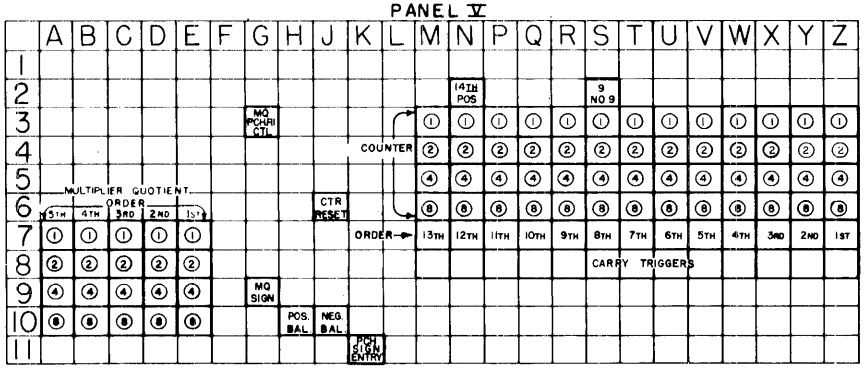

PANEL VI (GENERAL STORAGE)

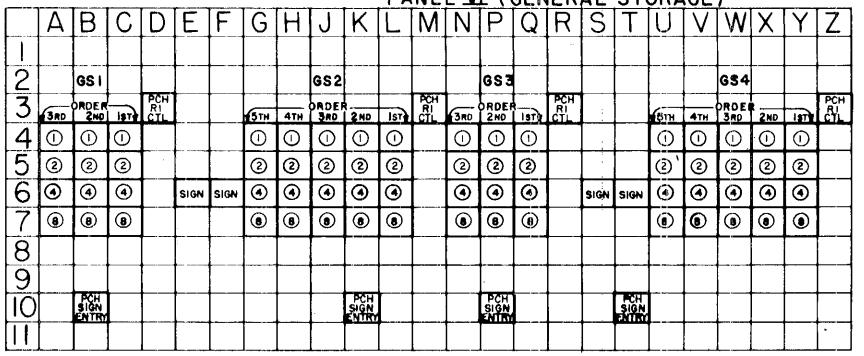

INTERNAL NEON INDICATOR CHART FOR GATE I, 604 G SUFFIX

PANEL 1

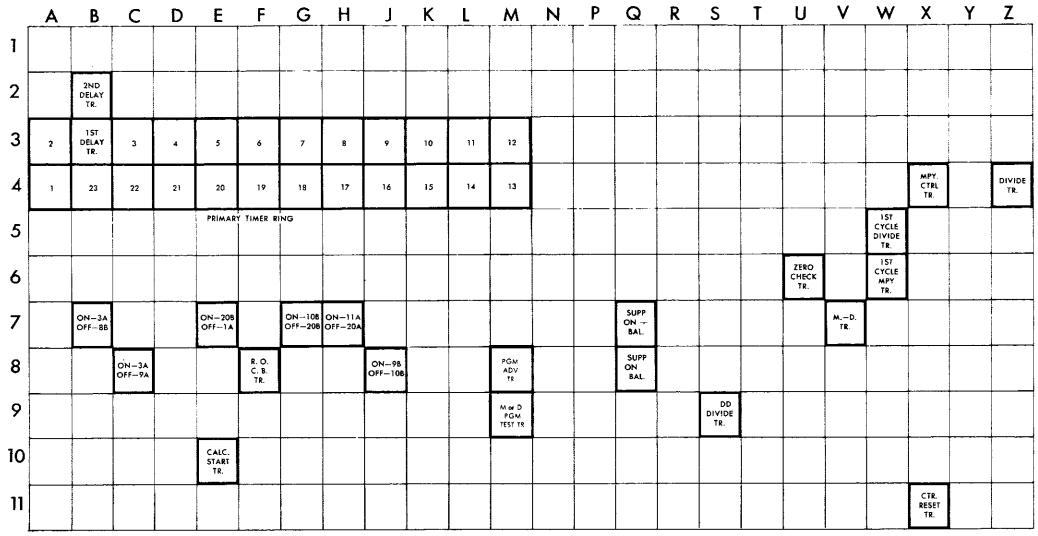

PANEL 3

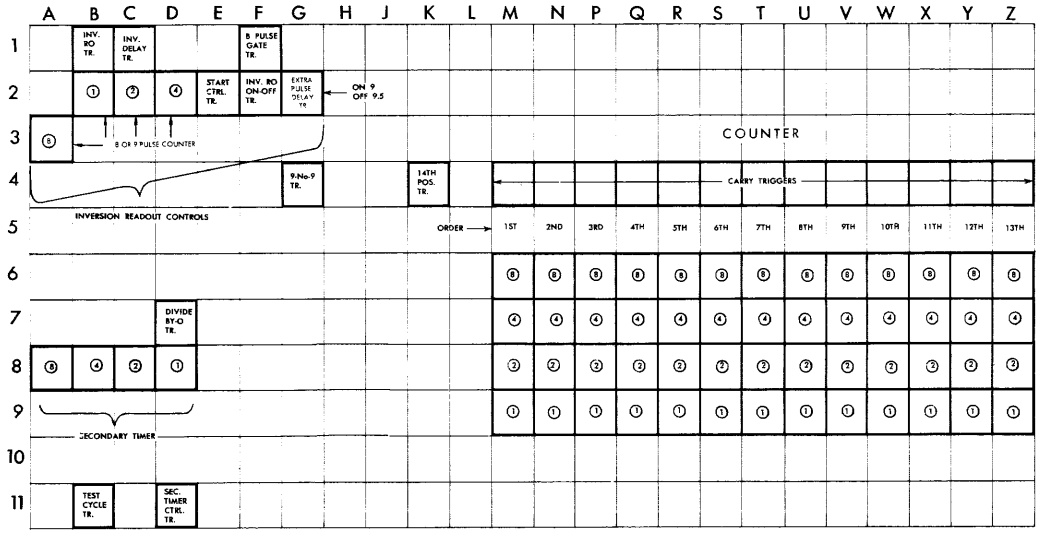

PANEL 5

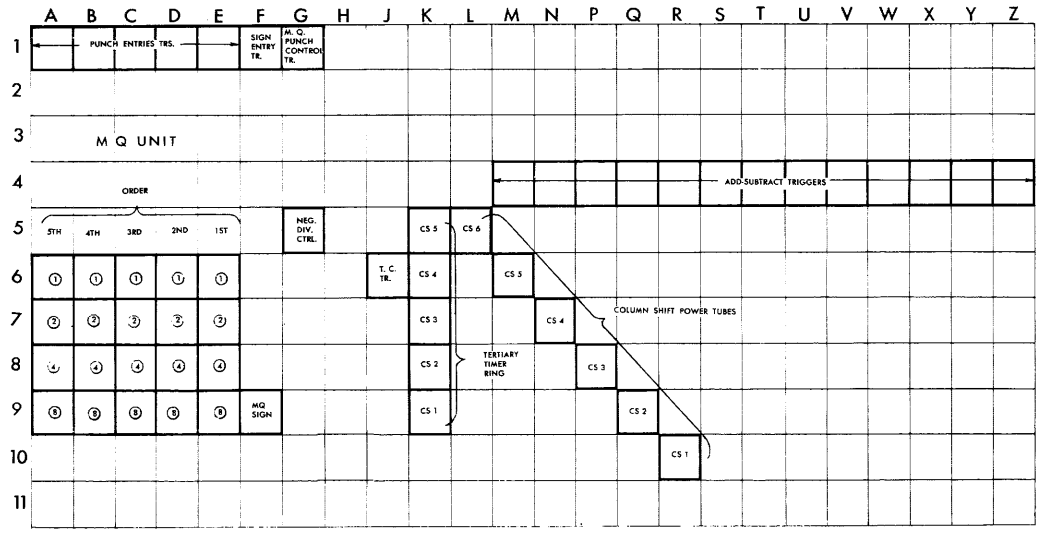

INTERNAL NEON INDICATOR CHART FOR GATE 2, 604 G SUFFIX

PANEL 2 (PROGRAM UNIT)

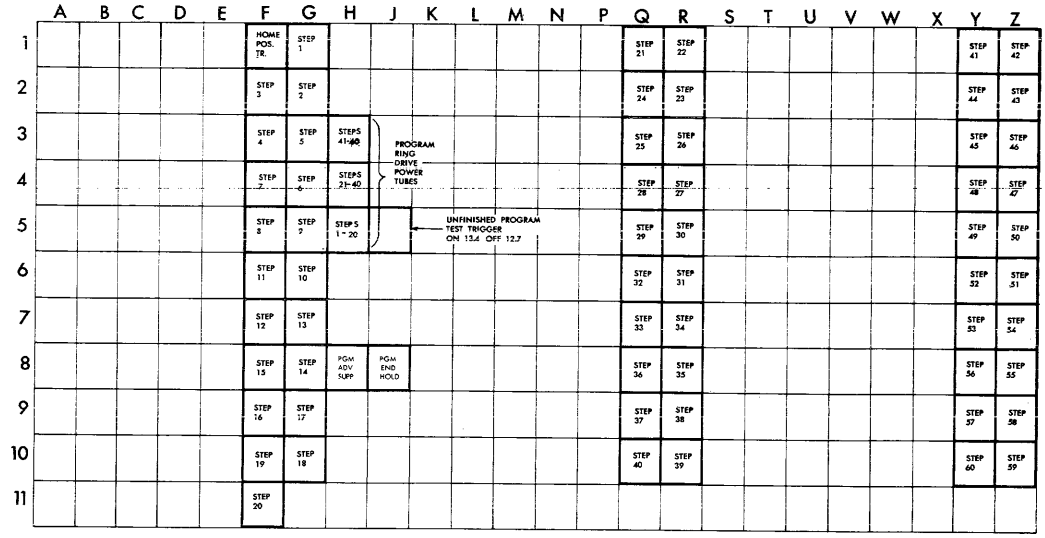

PANEL 4 (FACTOR STORAGE)

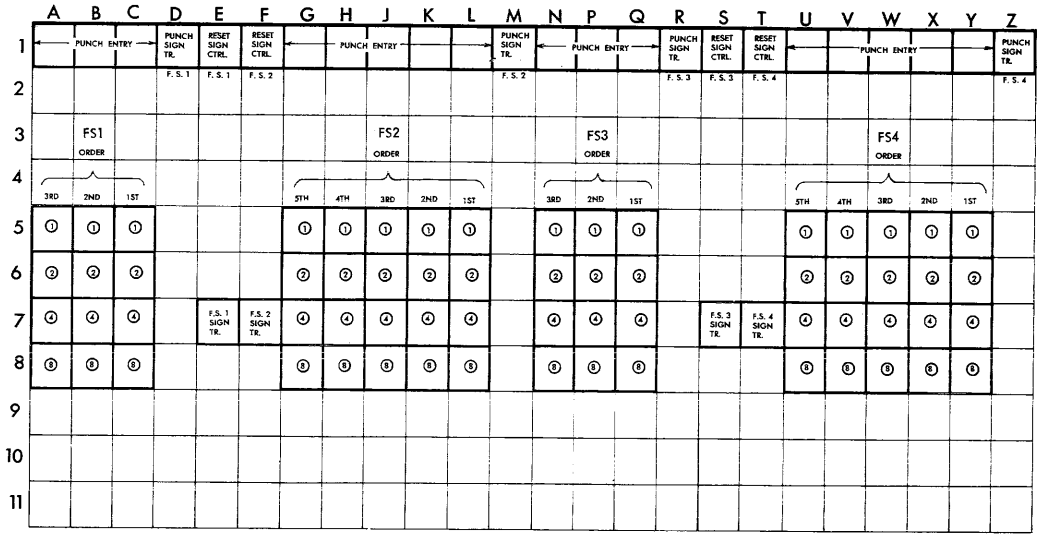

PANEL 6 (GENERAL STORAGE)

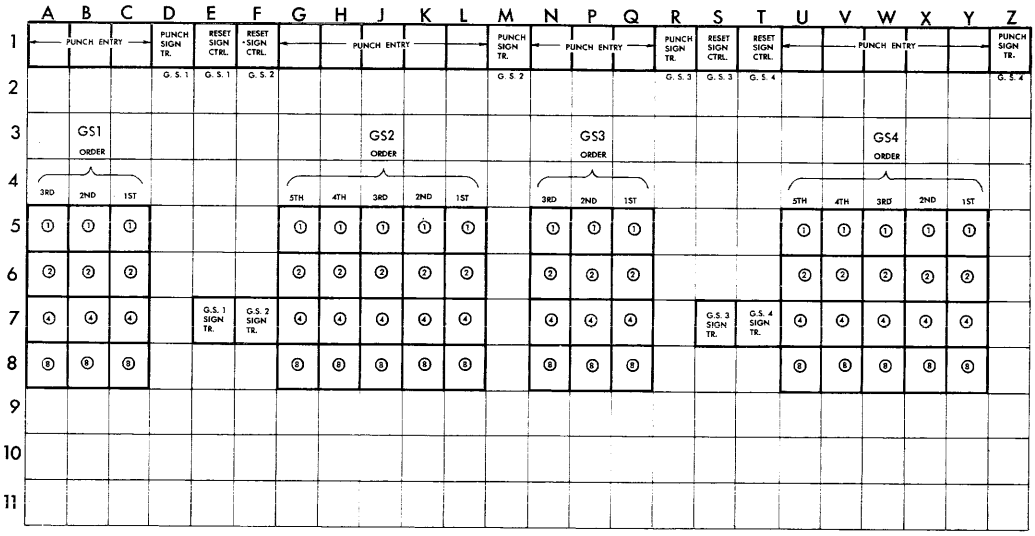

Resistance in Ohms

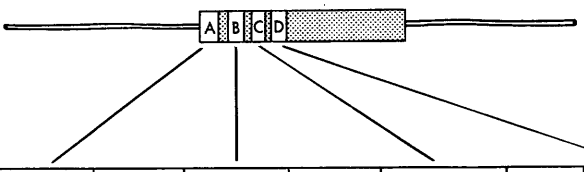

Color A	1st Significant Figure	Color B	2nd Significant Figure	Color C	Decimal Multiplier	Color D	Resistive Tolerance
Black	0	Black	0	Black	—	None	= 20%
Brown	1	Brown	1	Brown	10	Silver	= 10%
Red	2	Red	2	Red	100	Gold	= 5%
Orange	3	Orange	3	Orange	1,000		
Yellow	4	Yellow	4	Yellow	10,000		
Green	5	Green	5	Green	100,000		
Blue	6	Blue	6	Blue	1,000,000		
Violet	7	Violet	7	Violet	10,000,000		
Gray	8	Gray	8	Gray	—		
White	9	White	9	White	—		

Resistor Color Coding (Values in ohms)

Resistance values on diagrams given in thousands of ohms unless otherwise noted. Resistors rated 1/2 watt unless otherwise noted.

Capacitance in Micro-microfarads (mmf.)

First Stripe Indicates Temperature Coefficient (white denotes general purpose)

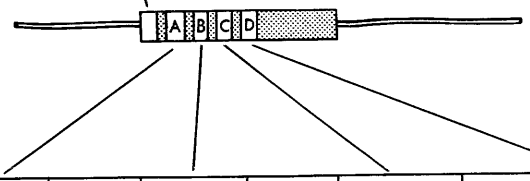

Color A	1st Significant Figure	Color B	2nd Significant Figure	Color C	Decimal Multiplier	Color D	Tolerance
Black	0	Black	0	Black	—	Brown	= 1%
Brown	1	Brown	1	Brown	10	Red	= 2%
Red	2	Red	2	Red	100	Green	= 5%
Orange	3	Orange	3	Orange	1,000	White	= 10%
Yellow	4	Yellow	4	Yellow	10,000	Black	= 20%
Green	5	Green	5	Green	100,000		
Blue	6	Blue	6	Blue	1,000,000		
Violet	7	Violet	7	Violet	10,000,000		
Gray	8	Gray	8	Gray	—		
White	9	White	9	White	—		

Ceramic Capacitor Color Coding (Value in micro-microforads)

Capacitance values on diagrams given in micromicrofarads unless otherwise noted.

POWER SUPPLY, RESET, AND WIRE CODE.

DIAGRAM SYMBOL	POWER SUPPLY	PANEL WIRE COLOR
2	+ 150	RED
3	+ 75	ORANGE
	6.0 AC or Ground	BLACK
5	− 100	GREEN
6	− 175	BLUE
7	− 250	VIOLET

SIGNAL WIRES ARE YELLOW

RESET WIRES ARE WHITE WITH GREEN TRACER. WIRES FROM CONTROL PANEL ARE WHITE WITH BLACK TRACER.

One Side of All DC Power Supplies And The 6 Volt AC Supply is Grounded to Machine Frame.

CR	CALCULATE TIME RESET
PR	PUNCH TIME RESET
ER	ELECTRONIC RESET
UR	UNFINISHED PROGRAM RESET (H ONLY)

In Systems Diagrams The Reset Box is Located On The Side Of The Trigger Symbol Which Will Be Conducting After Being Reset.

SIGNAL LEVEL CODE

CODE	NAME	SHIFT RANGE
NO INDICATION	FULL OUTPUT	+ 150 to + 50
(t)	TAPPED OUTPUT	+ 150 to + 100
(c)	CATHODE FOLLOWER LEVEL	+ 25 to − 25
(s)	TRIODE SWITCH LEVEL	0v to −40

Special Levels Can Be Numerically Denoted in Parenthesis

\+ Before the Signal Indicates the Active State is the More Positive Level.

− Before the Signal Indicates the Active State is the More Negative Level.

EXAMPLE: +11AB (c) Indicates a Line Normally At −25 Volts Which Shifts to + 25 Volts During 11AB Time.

604 TUBE TYPES

This chart is provided for general information only. Specifications can vary from tube to tube due to manufacturing tolerances. Only IBM specification tested tubes should be used in the 604. All IBM tubes have the IBM part number imprinted. All tubes with the same IBM part number are interchangeable regardless of tube manufacturer type number.

IBM Type Designation	2D21	6AL5	6AQ5	6B	6J	5965
Class	Thyratron	Dual Diode	Beam Power	Pentagrid	Dual Triode	Power Dual Triode
IBM Part Number	300704	317785	300706	303613	304994	317261
Commercial types used or in use in 604's.	2D21	6AL5	6AQ5	1217 7036 1680(obs.) 5915A 2032 6687	E92CC 6J6(obs.) 5844 1684 1216	5965
Heater current at 6.3 volts	600 ma	300 ma	450 ma	300 ma	300 ma	450 ma
Plate Supply Voltage (604)	65v	150v	+150v	+150v	+150v	+ 150v
Screen Supply Voltage (604)	Connected to cathode	none	+150v	+ 75v	none	none
Grid cut off voltage (to reduce plate current to less than .2 ma with above supply voltages).	−5v to prevent firing	Diode type.	−20v	−6v either control grid.	−8v	−5v
Circuits designed to supply minimum cut off voltage of:	−17v	— — —	−30v	−20v each grid.	−17v	−16v (See note)
Usual Load Resistor:	Coil (130 to 800 ohms)	51 K or 68 K	3K	20K	20K	1K (See note)
Zero Bias current with usual load resistor:	(45 v minimum drop across coil)	3 ma either section	30 ma minimum	4.5 ma minimum each section	4.5 ma minimum each section. (50 ma total)	25 ma minimum each section. (50 ma total)

Note: The 5965 is generally used for cathode follower service with a 12 K cathode load resistor for each section. The tube in this service is not driven to cut off. Values given in above table are for Power Unit usage of 5965 with both sections in parallel.

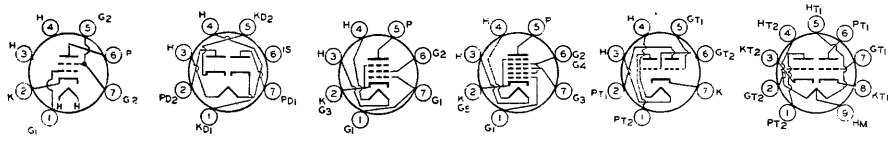

2D21 6AL5 6AQ5 6B 6J 5965

Germanium & Selenium Diodes

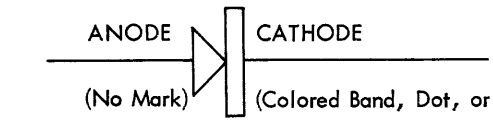

← Electrons Flow Easily in This Direction
(When Anode + with Respect to Cathode)

PLUGGABLE UNIT DIAGRAMS

This unit wiring section contains all units used in any 604 since 1950. These diagrams are provided for internal wiring reference. Components should not be field replaced within a unit. In many cases, such as in trigger units, components are matched to within 2½%. Where necessary the entire unit should be replaced.

Earlier machines used a straight numeric code to identify units (such as 2-110). Present coding is alpha-numeric (such as TR-1). This index is arranged in order by the Alpha-numeric code. For those units which have ever had a numeric code assigned, this number is included directly under the present code. The general relationship between the coding systems is shown by the following table:

Type of Unit	*Present Code*	*Numeric Code*
Cathode Follower	CF-xx	None
Diode Switch	DS-xx	None
Inverter Unit	IN-xx	6-xxx
Pentagrid Switch	PS-xx	4-xxx
Power Unit	PW-xx	5-xxx
Thyratron Unit	TH-xx	9-xxx
Trigger Unit	TR-xx	2-xxx

The following illustration shows the arrangement of the data included in the diagram box for each type of pluggable unit in this index:

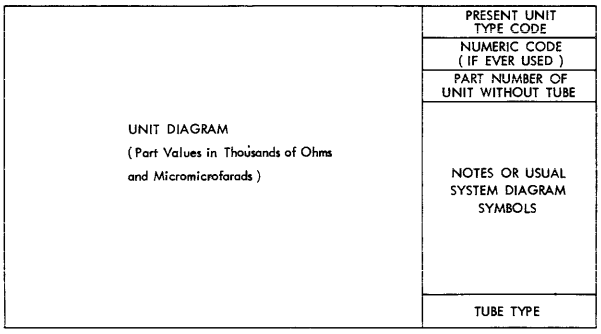

The following diagram shows the pin numbering and the panel mounting orientation for the pluggable unit sockets from the back (wiring side):

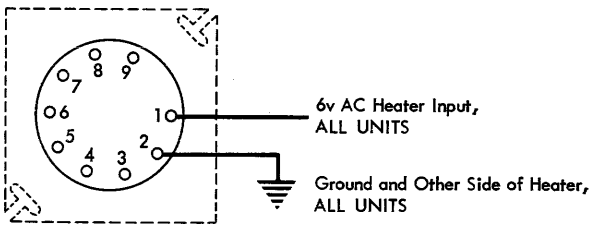

TRIGGERS

OLD CODE	NEW CODE
2-110	TR-1
2-115	TR-2
2-130	TR-3
2-150	TR-4
2-625	TR-31
2-635	TR-32
2-810	TR-41
2-820	TR-42

SWITCHES

OLD CODE	NEW CODE
4-100B	PS-3
4-101B	PS-2
4-200	PS-14
4-300B	PS-4
4-350B	PS-9
4-351B	PS-10
4-400	PS-13
4-500	PS-20
4-501	PS-22
4-600B	PS-24
4-601B	PS-25
4-700	PS-41
4-720	PS-36
4-740	PS-37
4-760	PS-38
4-780	PS-39
4-810B	PS-26
4-811B	PS-27

POWER UNITS

OLD CODE	NEW CODE
5-100	PW-1
5-200	PW-2
5-201	PW-3
5-400	PW-6
5-401	PW-7

INVERTERS

OLD CODE	NEW CODE
6-051	IN-1
6-100	IN-4
6-101	IN-5
6-103	IN-7
6-105	IN-23
6-200	IN-29
6-201	IN-30
6-301	IN-3
6-401	IN-13
6-451	IN-17
6-503	IN-24
6-551	IN-33
6-601	IN-28
6-701	IN-34
6-803	IN-35
6-901	IN-36
6-941	IN-31

THYRATRONS

OLD CODE	NEW CODE
9-120	TH-4
9-201	TH-5

CF-1 Through CF-12

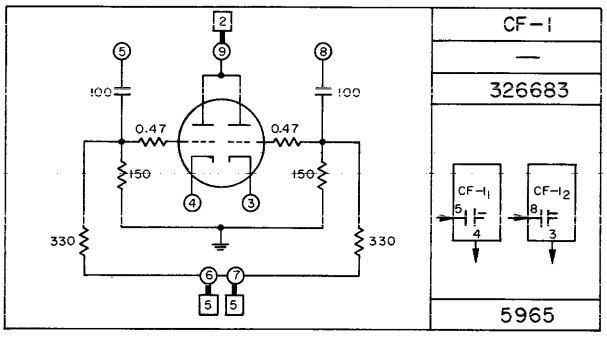

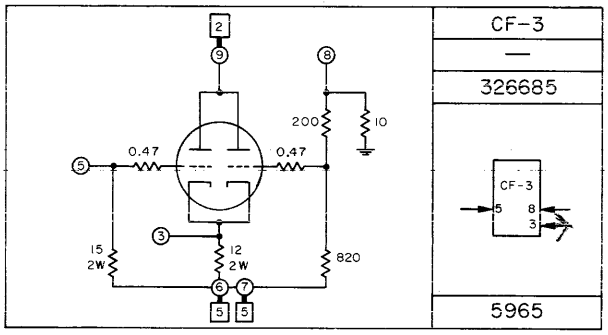

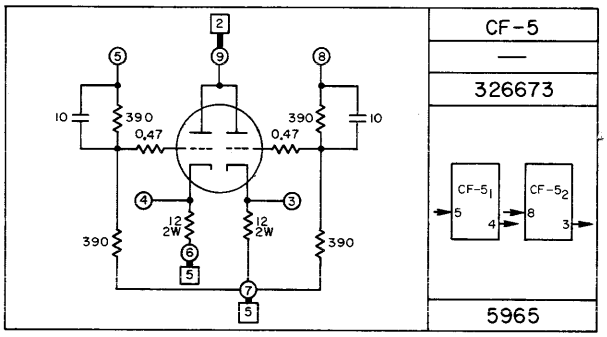

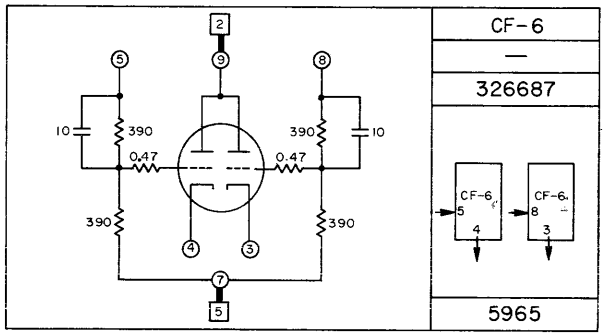

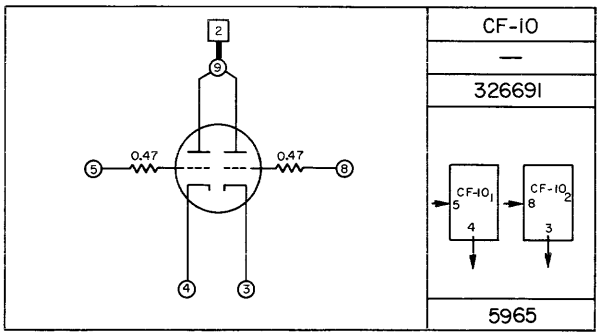

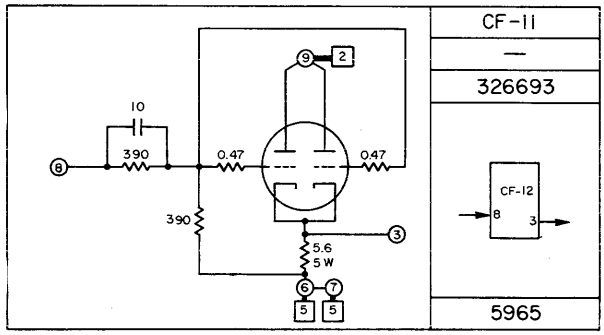

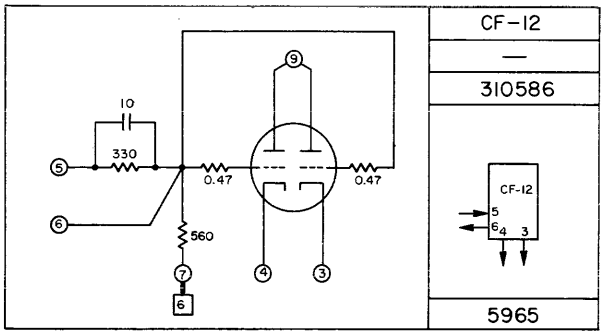

DS-3 Through IN-4

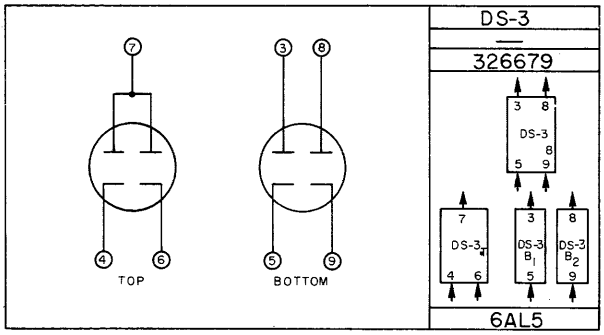

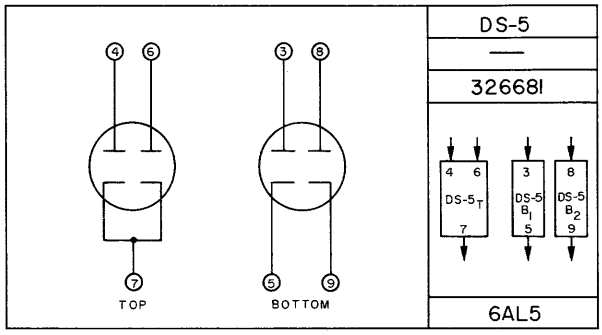

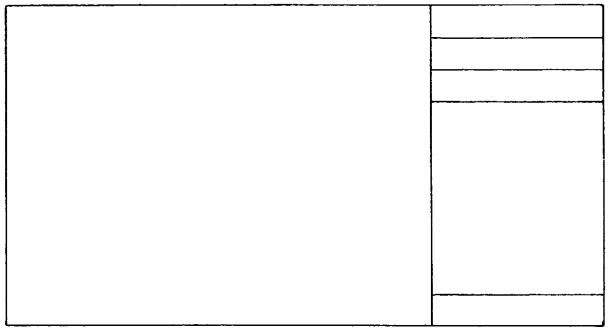

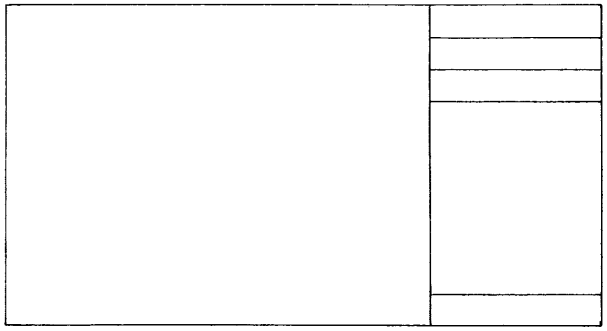

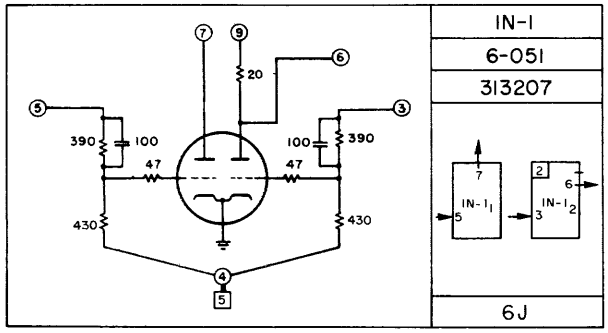

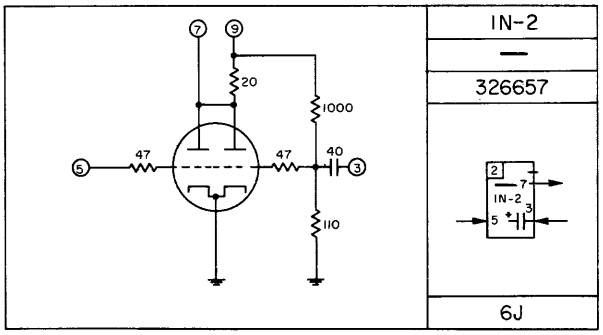

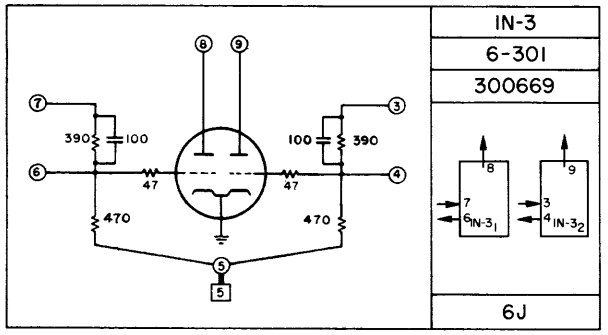

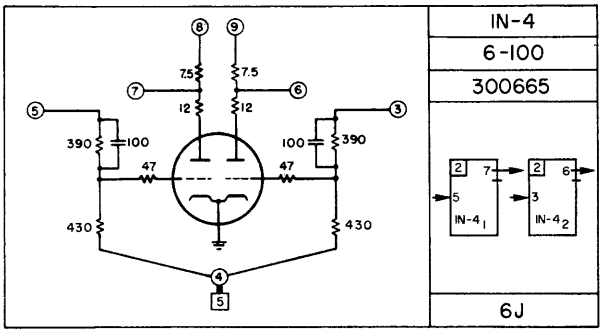

IN-5 Through IN-13

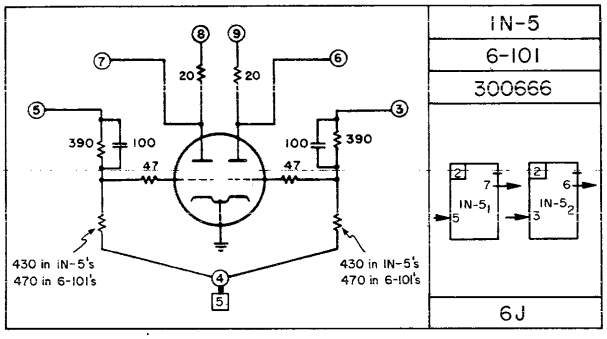

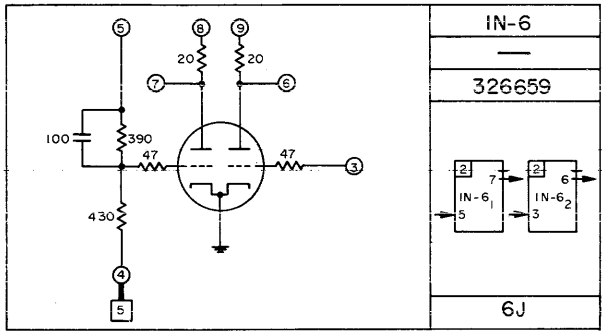

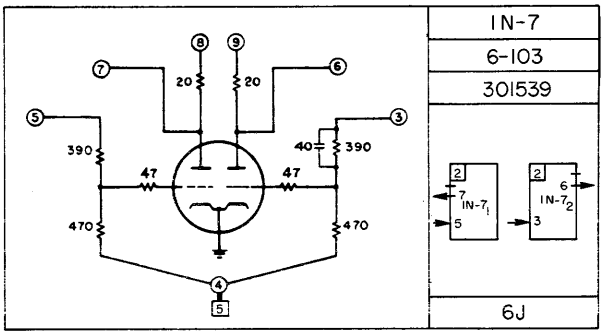

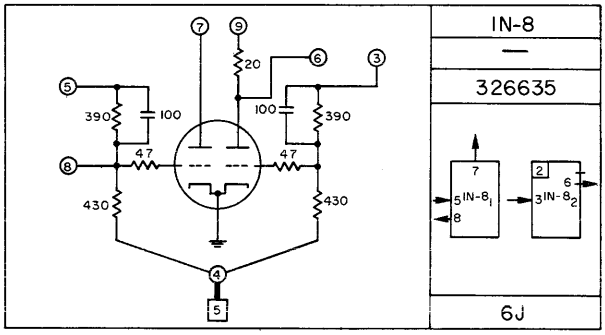

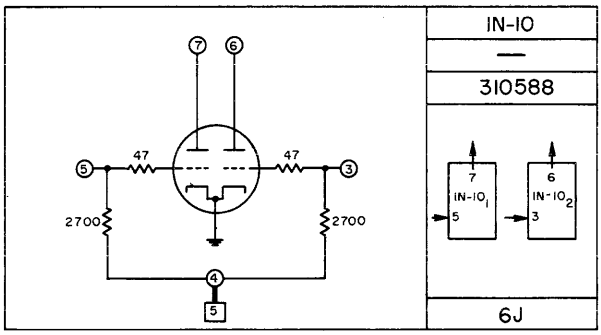

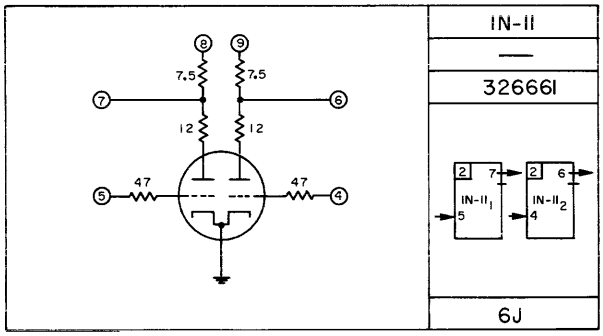

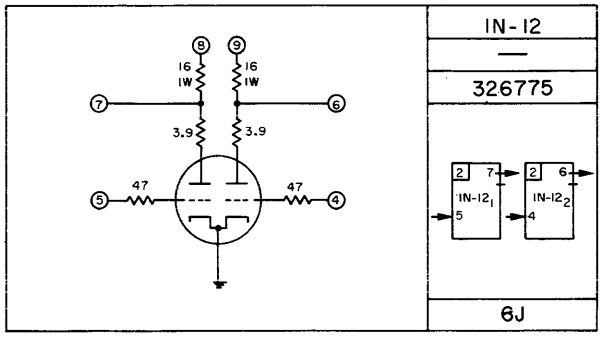

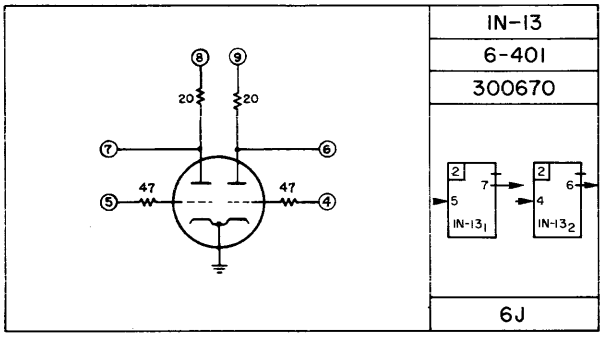

IN-14 Through IN-28

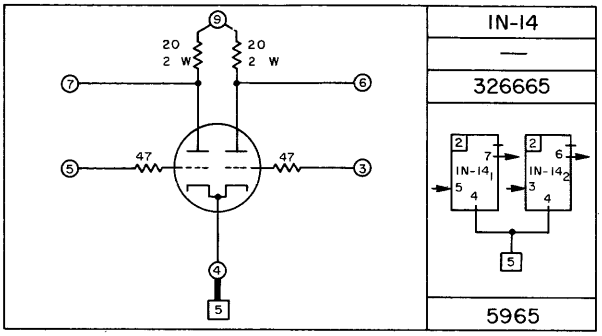

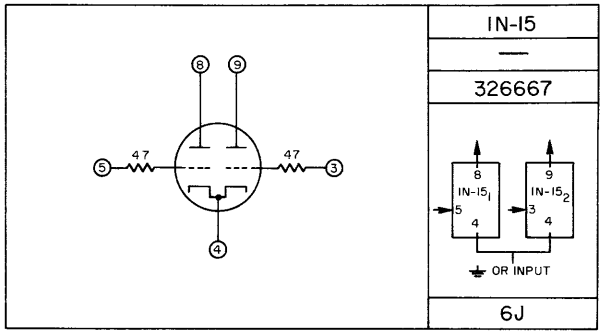

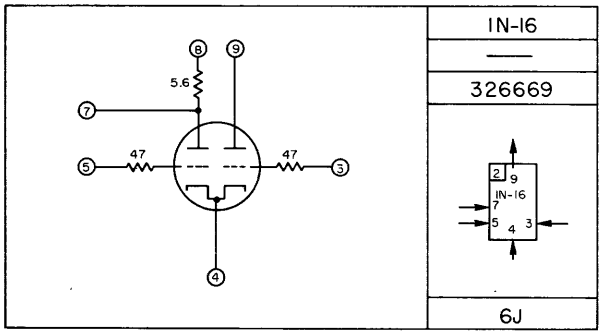

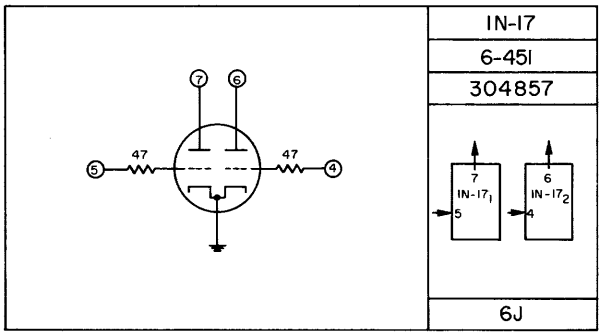

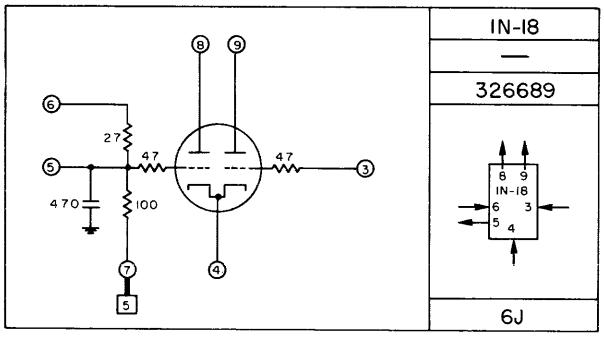

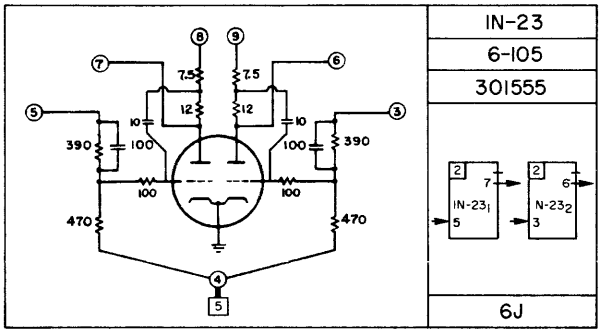

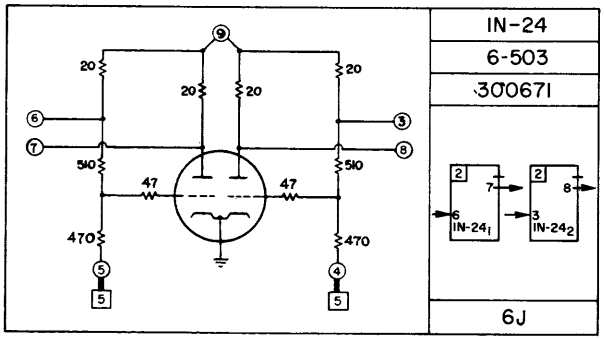

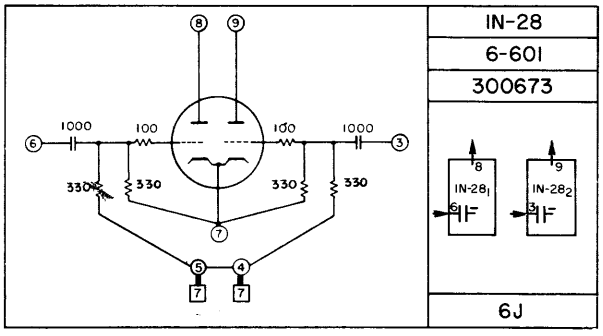

IN-29 Through IN-36

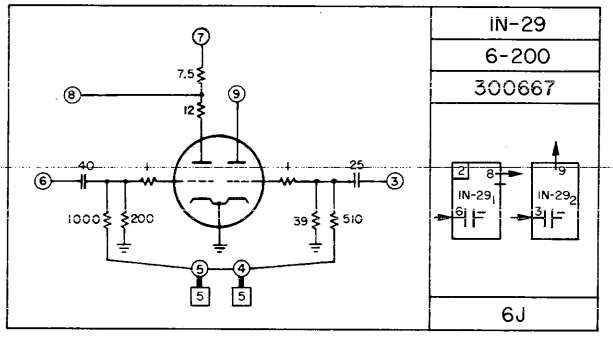

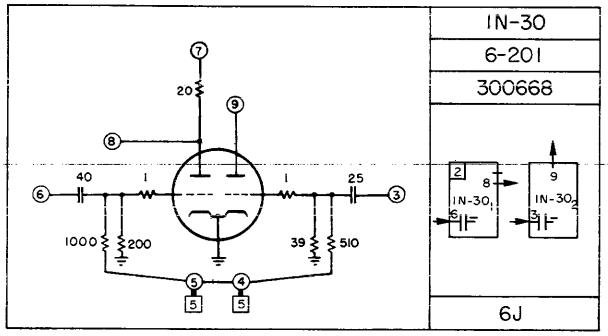

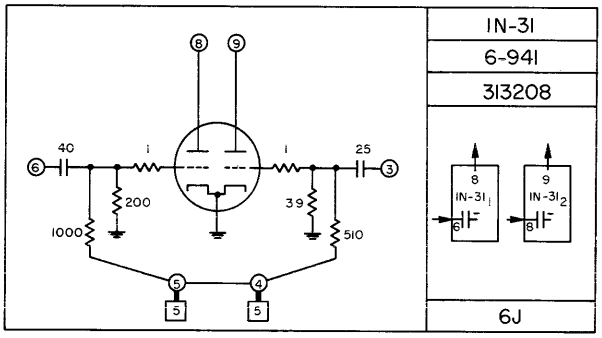

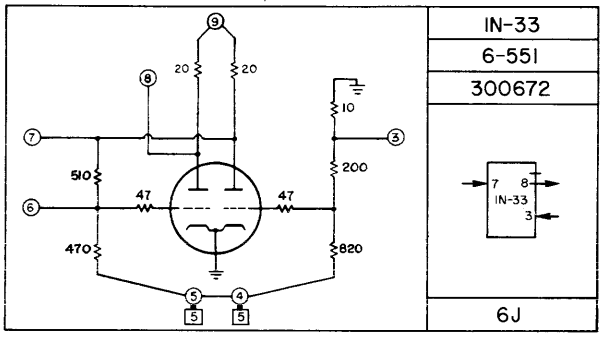

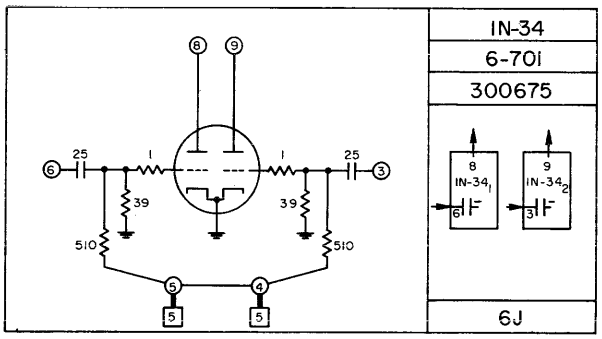

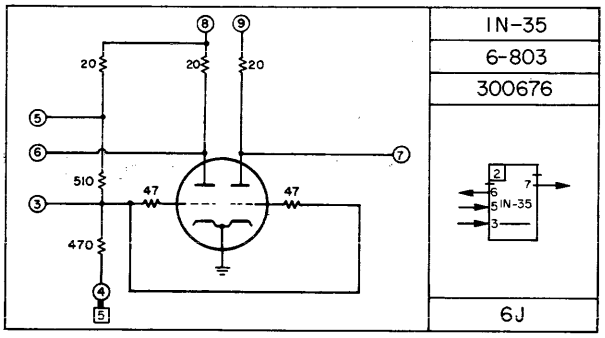

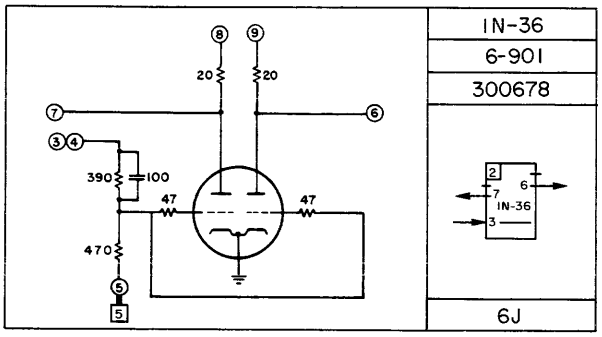

PS-1 Through PS-8

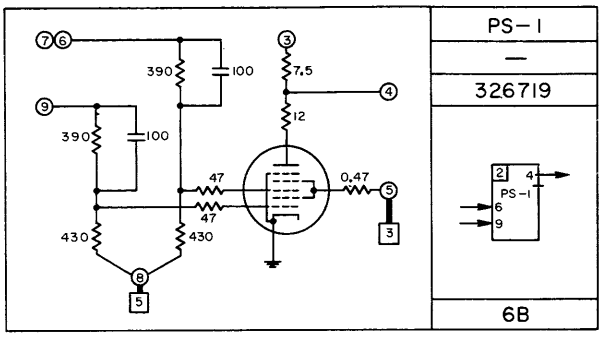

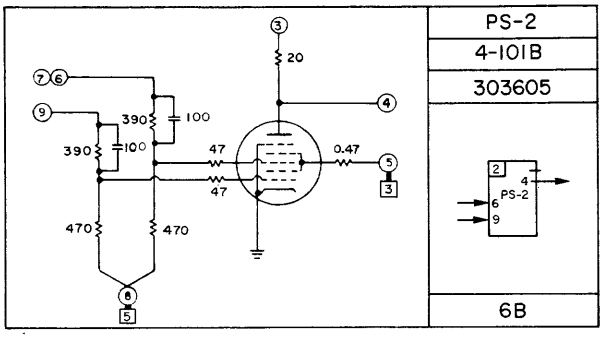

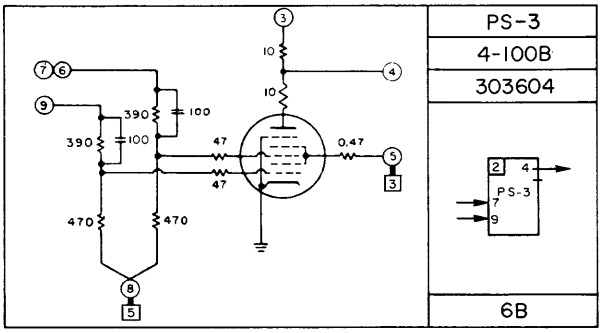

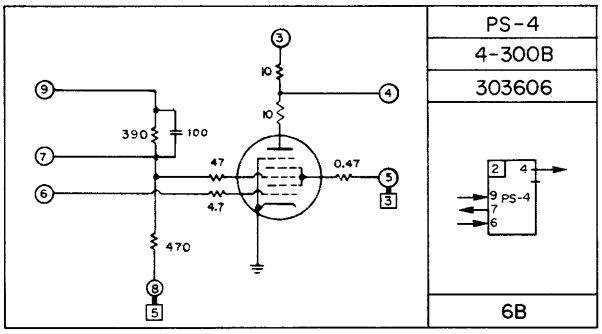

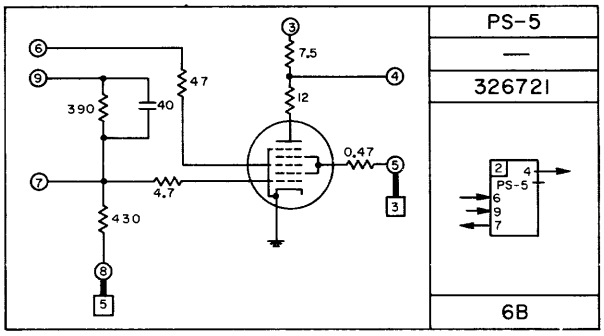

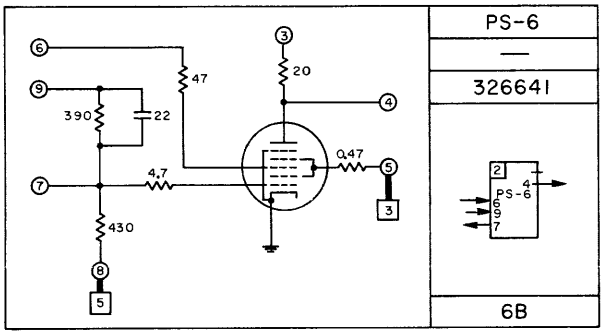

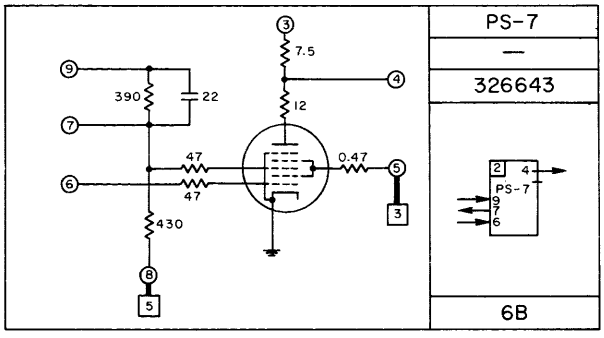

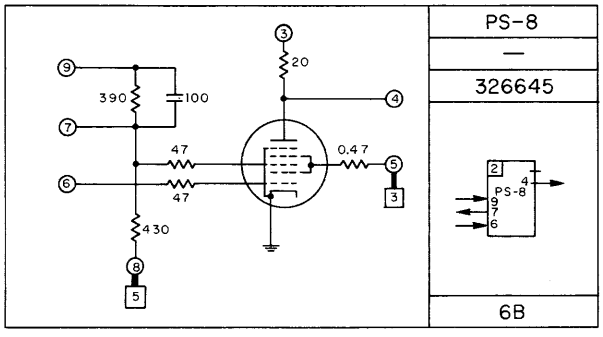

PS-9 Through PS-21

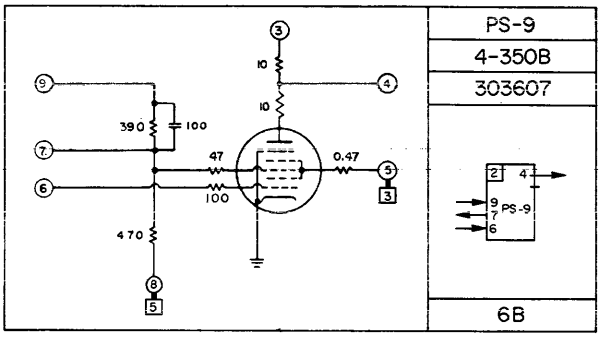

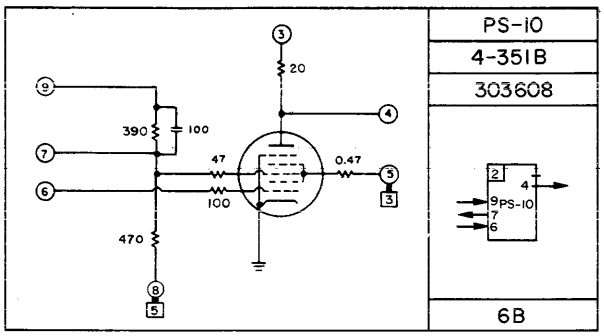

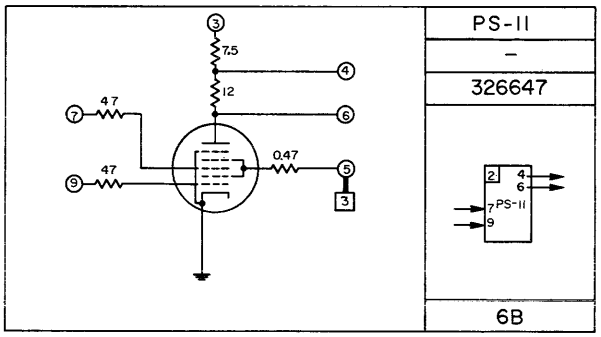

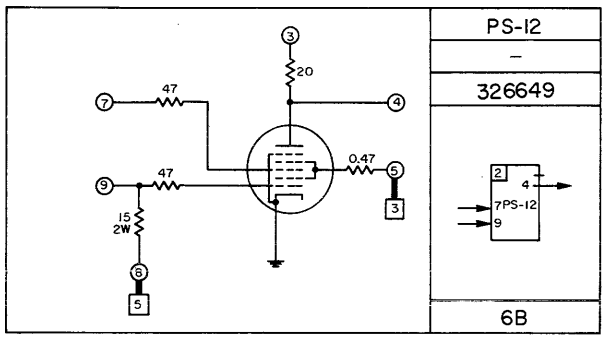

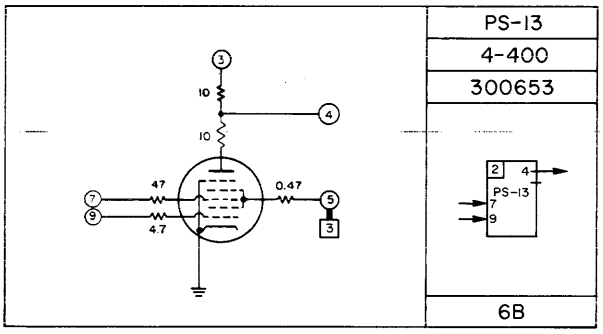

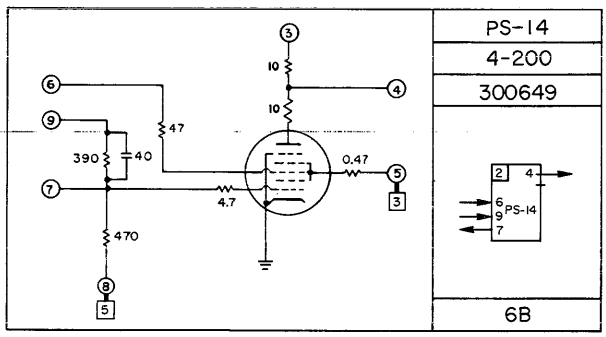

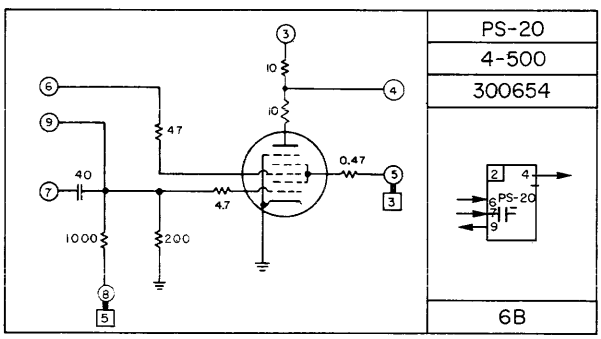

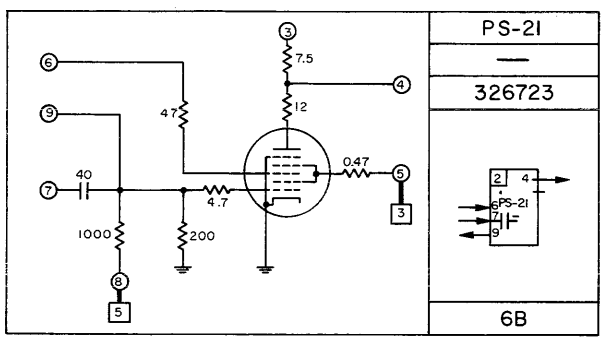

PS-22 Through PS-33

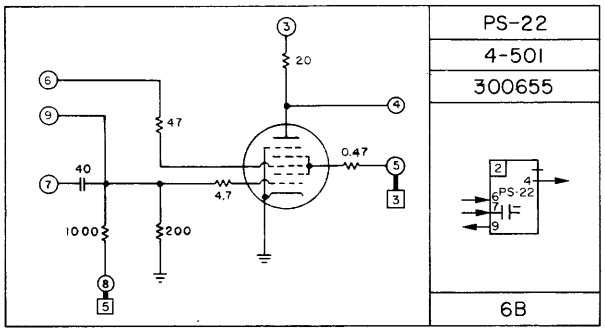

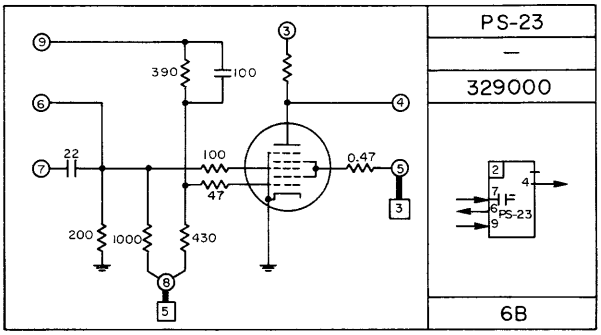

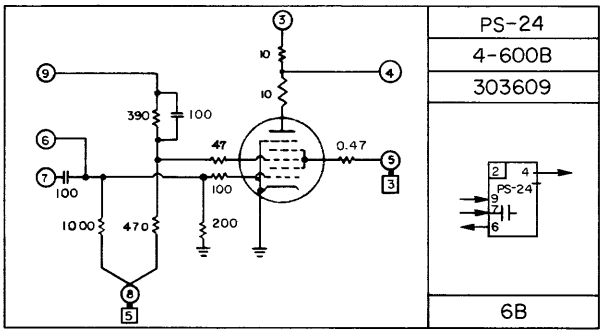

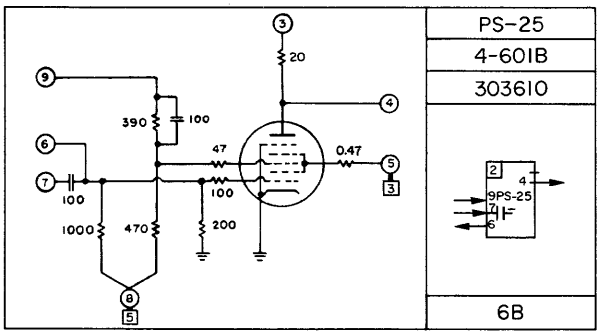

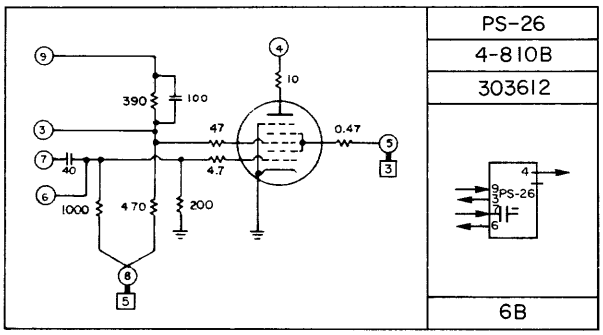

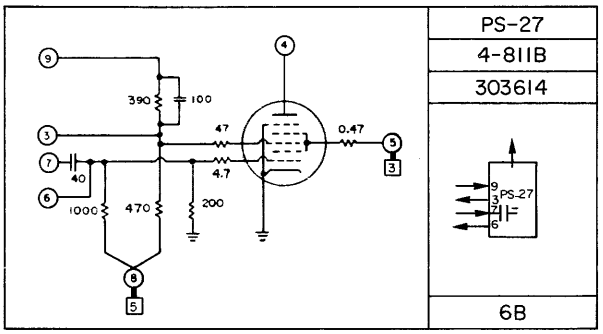

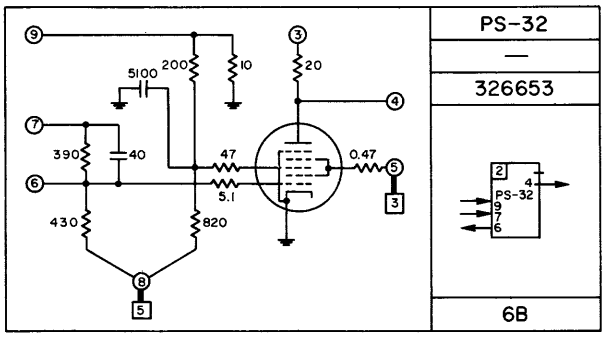

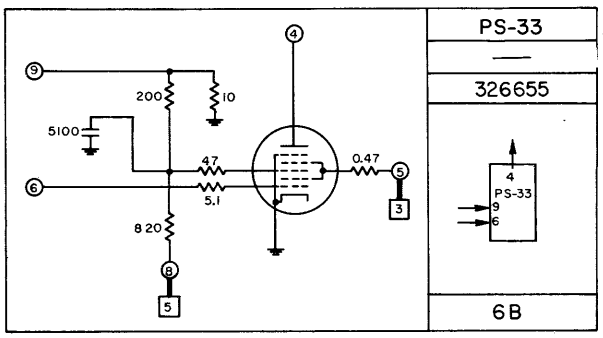

PS-36 Through PS-41

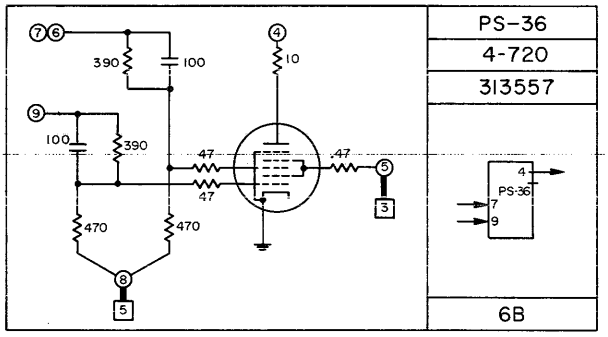

PS-36
4-720
313557
6B

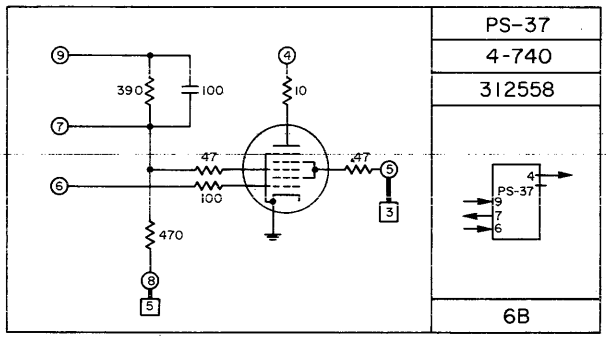

PS-37
4-740
312558
6B

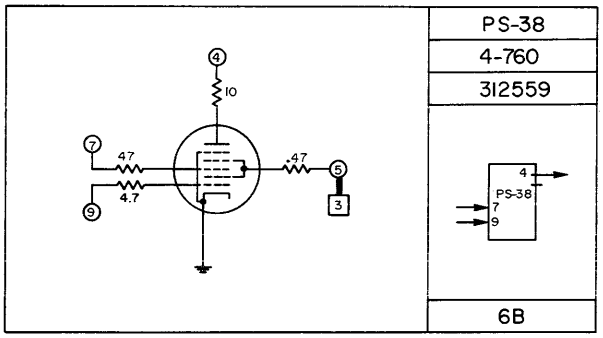

PS-38
4-760
312559
6B

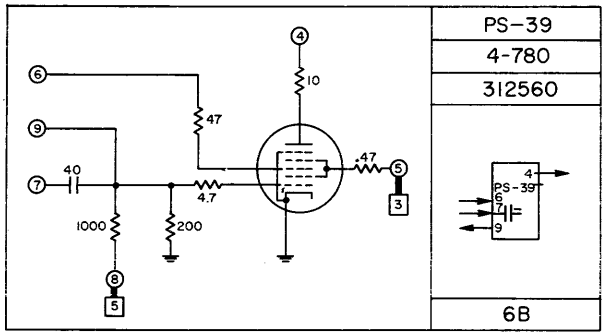

PS-39
4-780
312560
6B

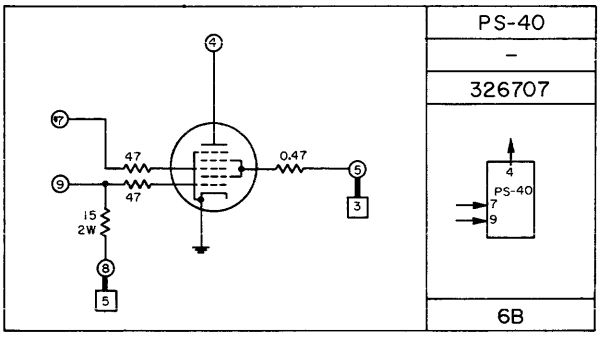

PS-40
–
326707
6B

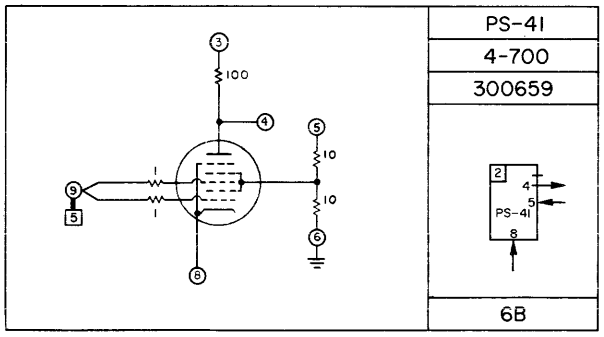

PS-41
4-700
300659
6B

PW-1 Through PW-12

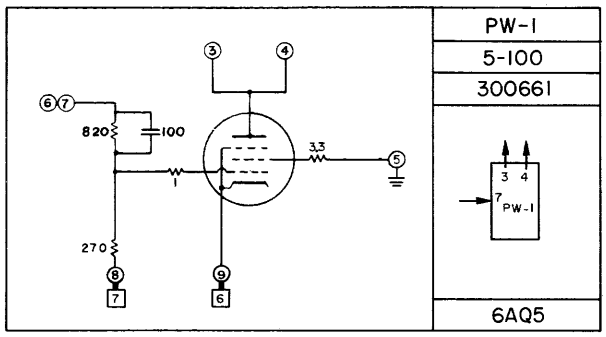

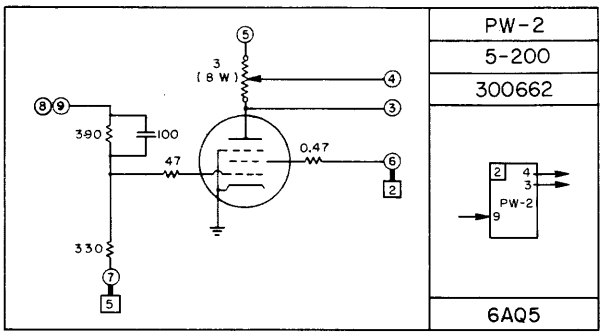

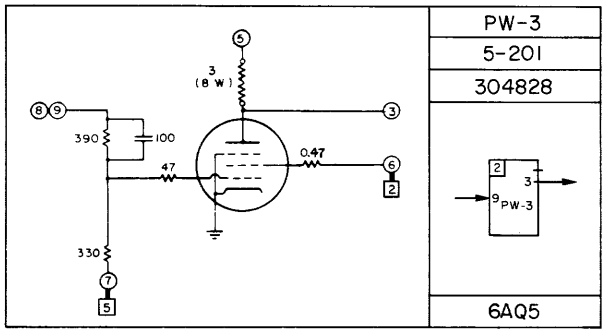

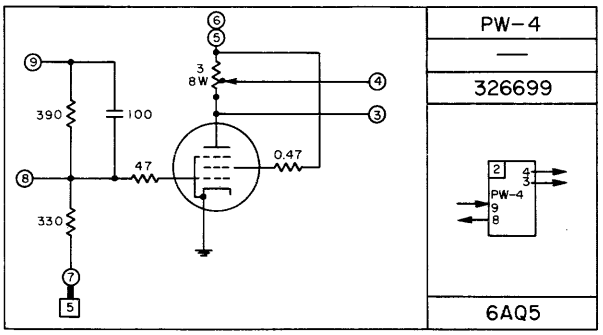

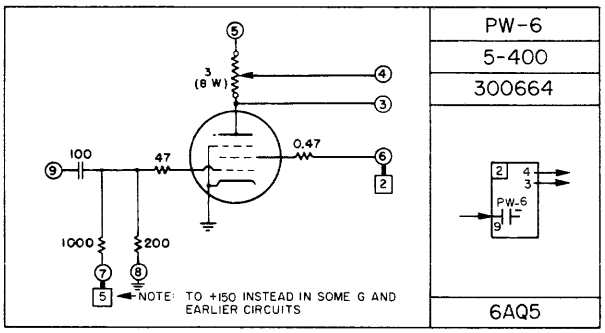

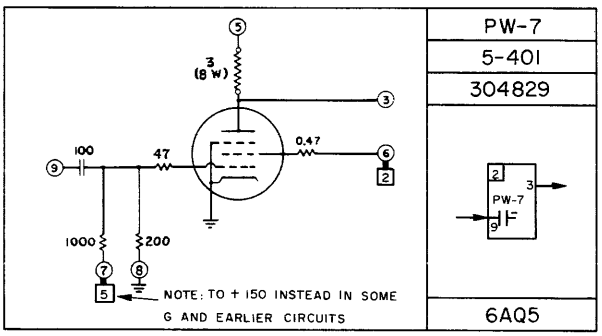

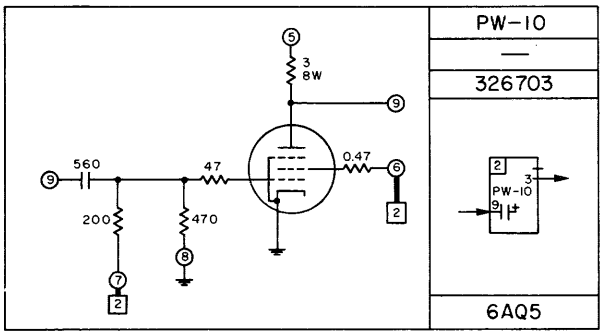

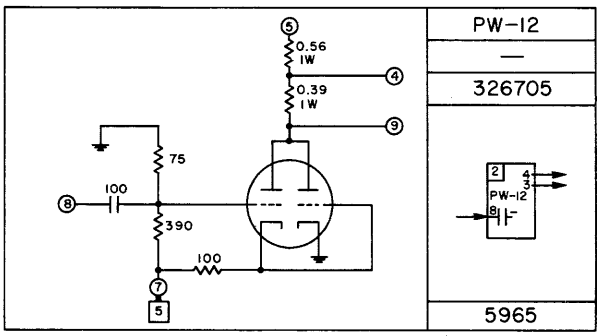

TH-1 Through TH-5

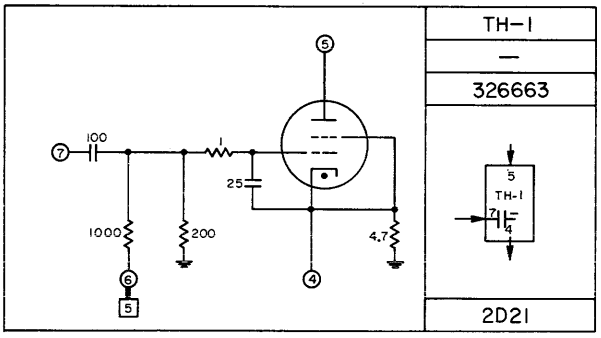

TH-1

—

326663

2D21

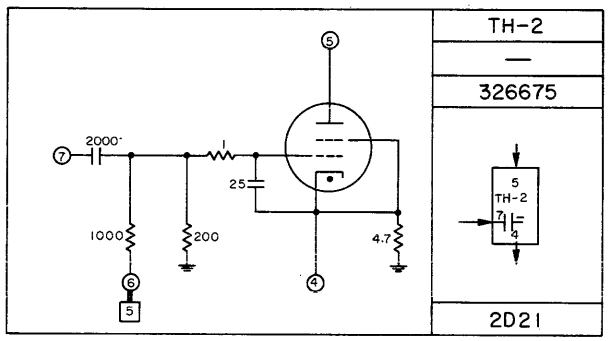

TH-2

—

326675

2D21

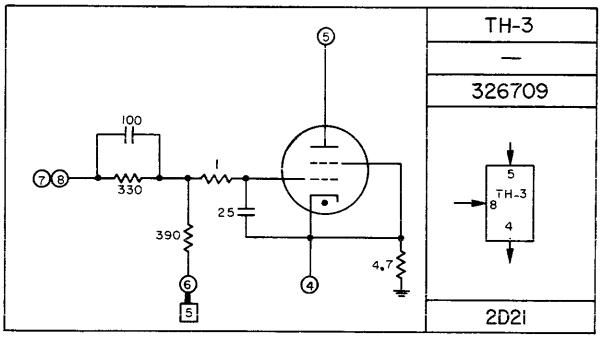

TH-3

—

326709

2D21

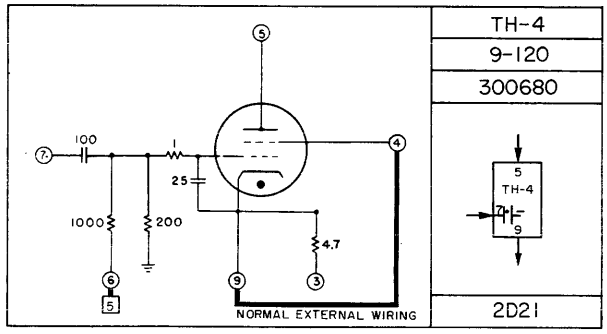

TH-4

9-120

300680

2D21

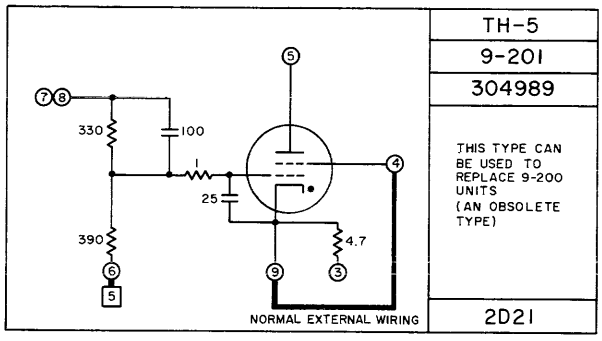

TH-5

9-201

304989

THIS TYPE CAN BE USED TO REPLACE 9-200 UNITS (AN OBSOLETE TYPE)

2D21

TR-1 Through TR-21

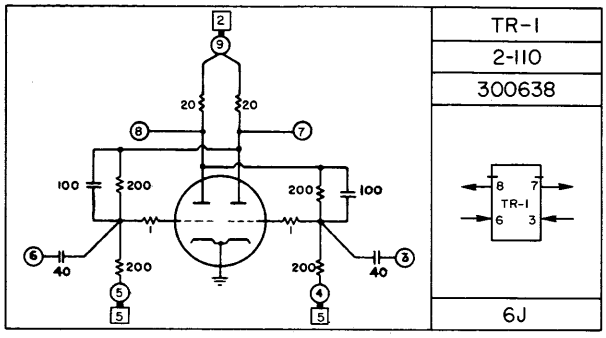

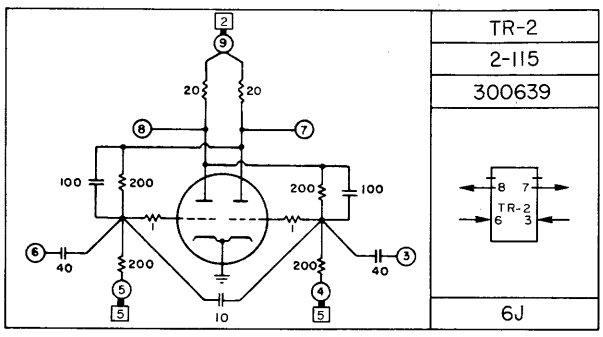

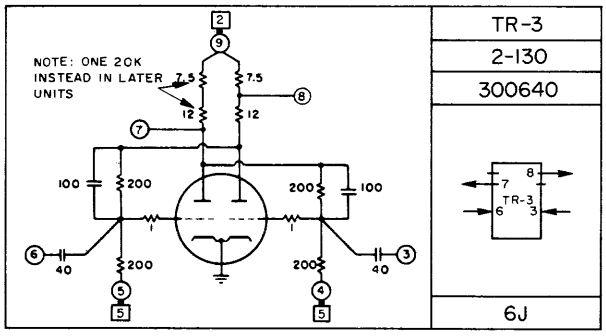

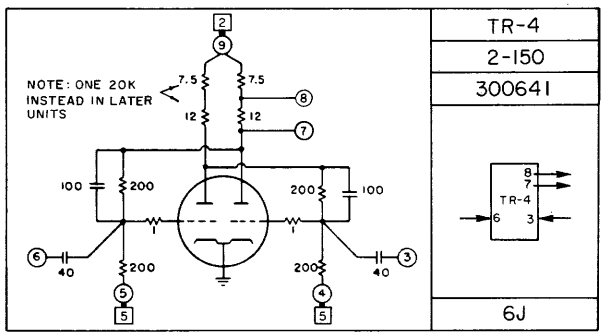

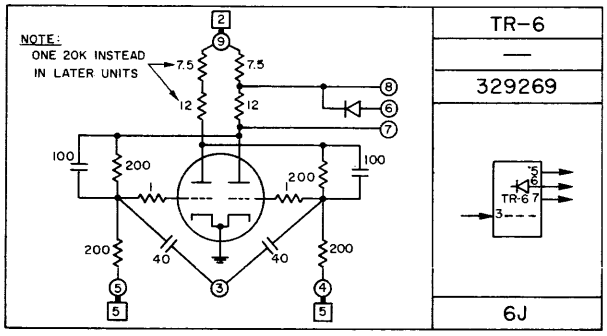

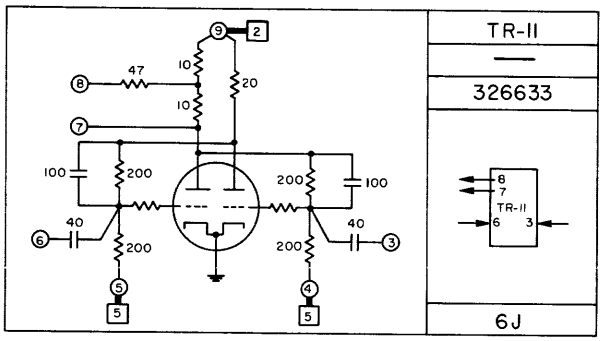

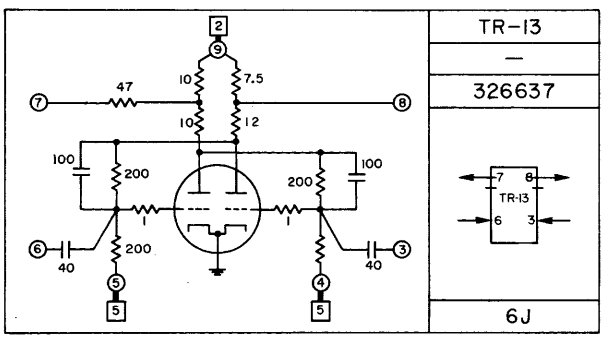

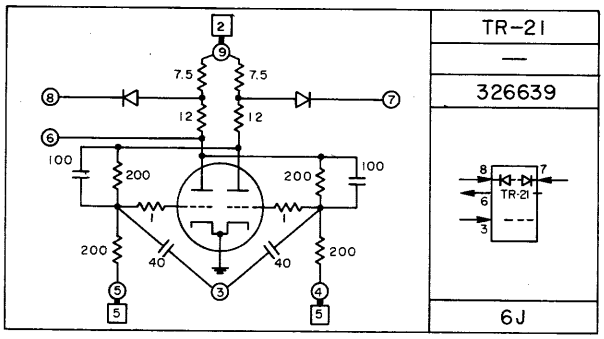

TR-31 Through TR-42

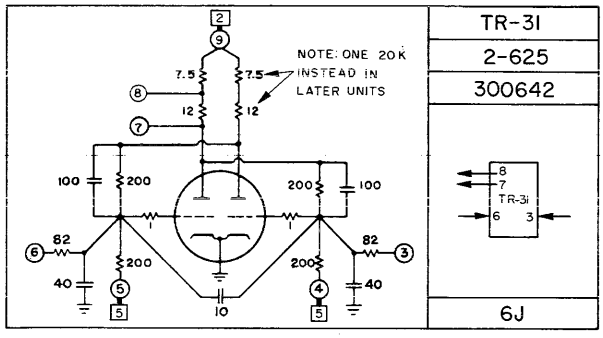

TR-31
2-625
300642
6J

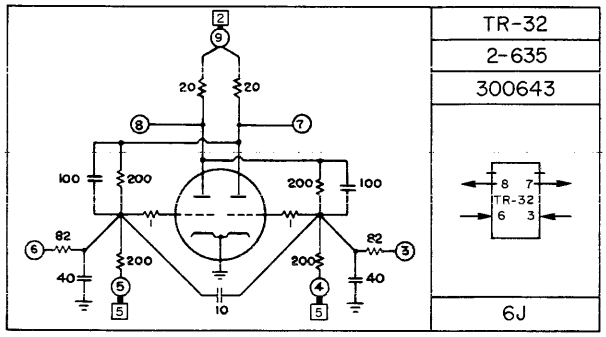

TR-32
2-635
300643
6J

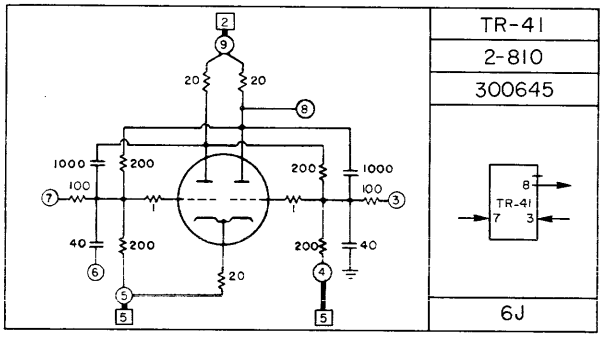

TR-41
2-810
300645
6J

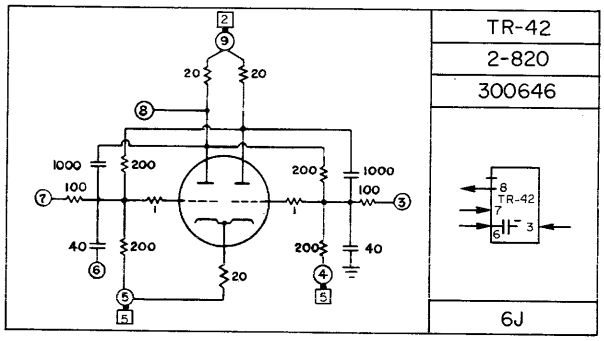

TR-42
2-820
300646
6J