CyberDisplay®

KOPIN

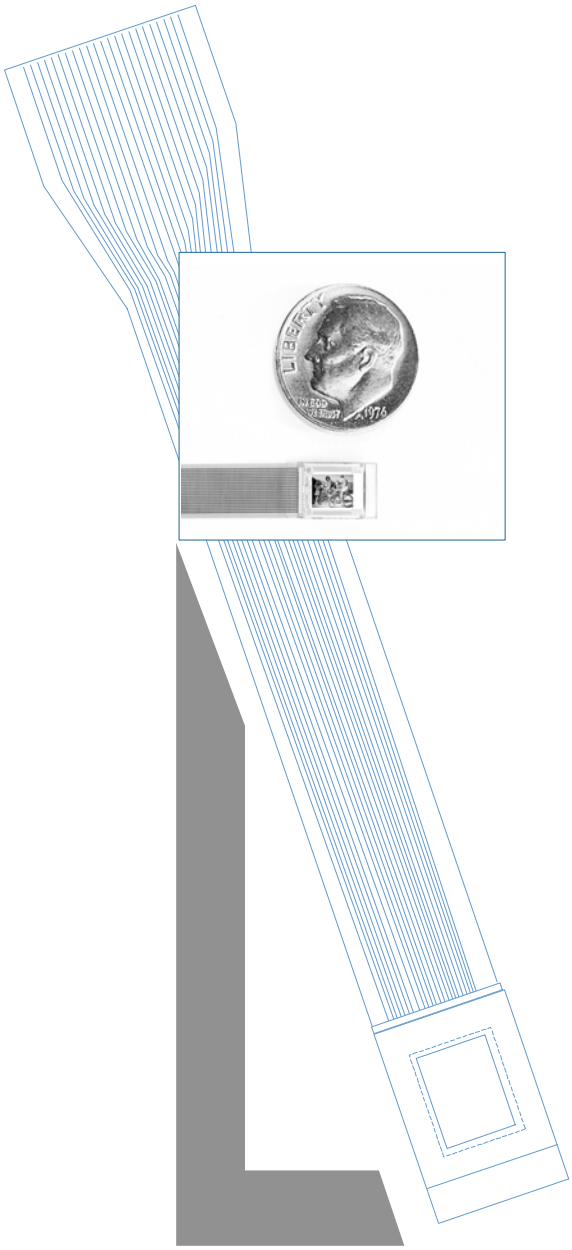

CyberDisplay®
SVGA LVS
Color Display

KCD-KDCS-WA
KCD-KDCS-WB
(Framed Display)

The display products and systems described herein are covered by numerous issued U.S. and foreign patents and pending applications owned by or licensed to Kopin Corporation.

These specifications are subject to change without notice.

Kopin Display Corporation

125 North Drive, Westborough, MA 01581
T +1.508.870.5959, F +1.508.870.0660

PS-0267 Rev. 1.0 2011-03-29

Table of Contents

1. GENERAL DESCRIPTION....4

2. ELECTRICAL SPECIFICATIONS....6

2.1 INTERFACE SIGNALS....7
2.2 SUPPLY AND SIGNAL VOLTAGES....8
2.3 HORIZONTAL TIMING....8
2.4 VERTICAL TIMING....8
2.5 SLEEP MODE....8
2.6 ELECTRICAL CHARACTERISTICS....9
2.7 TIMING CHARACTERISTICS....11
2.8 PARAMETERIZED TIMING....14

3. OPTICAL SPECIFICATIONS....16

3.1 OPTICAL CHARACTERISTICS....16

4. ENVIRONMENTAL SPECIFICATIONS....17

4.1 FLEX CABLE INTERCONNECT....17
4.2 DISPLAY RELIABILITY....17

5. MECHANICAL SPECIFICATIONS....18

5.1 MECHANICAL DRAWINGS....18
5.2 DISPLAY FLEX CABLE INTERCONNECT....20

6. DISPLAY APPEARANCE....21

List of Tables

Table 2-1: Interface Pin List....7
Table 2-2: Absolute Maximum Ratings....9
Table 2-3: Recommended DC Operating Conditions....9
Table 2-4: Electrical Characteristics....10
Table 2-5: Electrical Characteristics and Recommended AC Operating Conditions....11
Table 2-6: Example Parameter Values for Standard Formats....15
Table 3-1: Optical Characteristics....16
Table 4-1: CyberDisplay® SVGA LVS Display Environmental Specification....17
Table 6-1: Display Appearance....21

List of Figures

Figure 1-1: Pixel Array....5
Figure 2-1: CyberDisplay® SVGA LVS Block Diagram....6
Figure 2-2: Supply and Interface Voltages....8
Figure 2-3: Horizontal Timing, Right Scan....12
Figure 2-4: Horizontal Timing, Left Scan....13
Figure 2-5: Vertical Timing, Down Scan....14
Figure 2-6: Vertical Timing, Up Scan....14
Figure 2-7: Horizontal Timing Parameters....15
Figure 5-1: CyberDisplay® SVGA LVS Display and Pixel Array Area....18
Figure 5-2: CyberDisplay® SVGA LVS Display and Flex Assembly....19
Figure 5-3: CyberDisplay® SVGA LVS Outline Drawing (KCD-KDCS-WA / -WB)....20
Figure 5-4: Display FPC Interconnect – Contact Pad Area....20

Figure 6-1: Display Appearance Specification.....21

1. General Description

The CyberDisplay® SVGA LVS is an active matrix liquid crystal display with 800 × 600 × 3 color dot resolution. The display is fabricated in a high speed, low power CMOS process utilizing single crystal silicon-on-insulator (SOI) starting material. The display features capacitively-coupled video inputs with integrated DC restore circuitry for reduced interface voltage swing. A sleep mode is provided to simplify system power management.

Figure 1-1 shows the pixel array layout. Each square full-color pixel is composed of three primary color dots. The active array of 2400 × 600 dots is surrounded by opaque dummy pixels, for a total array size of 2412 × 606 dots.

Features

- 800 × 600 × 3 active resolution (SVGA)
- 3.75 × 11.25 µm dot pitch (11.25 × 11.25 µm square color pixels)
- Power-saving sleep mode
- Integrated horizontal and vertical scanners
- Compact: Active pixel area 9.00 mm × 6.75 mm (0.44 inch diagonal)

Figure 1-1: Pixel Array

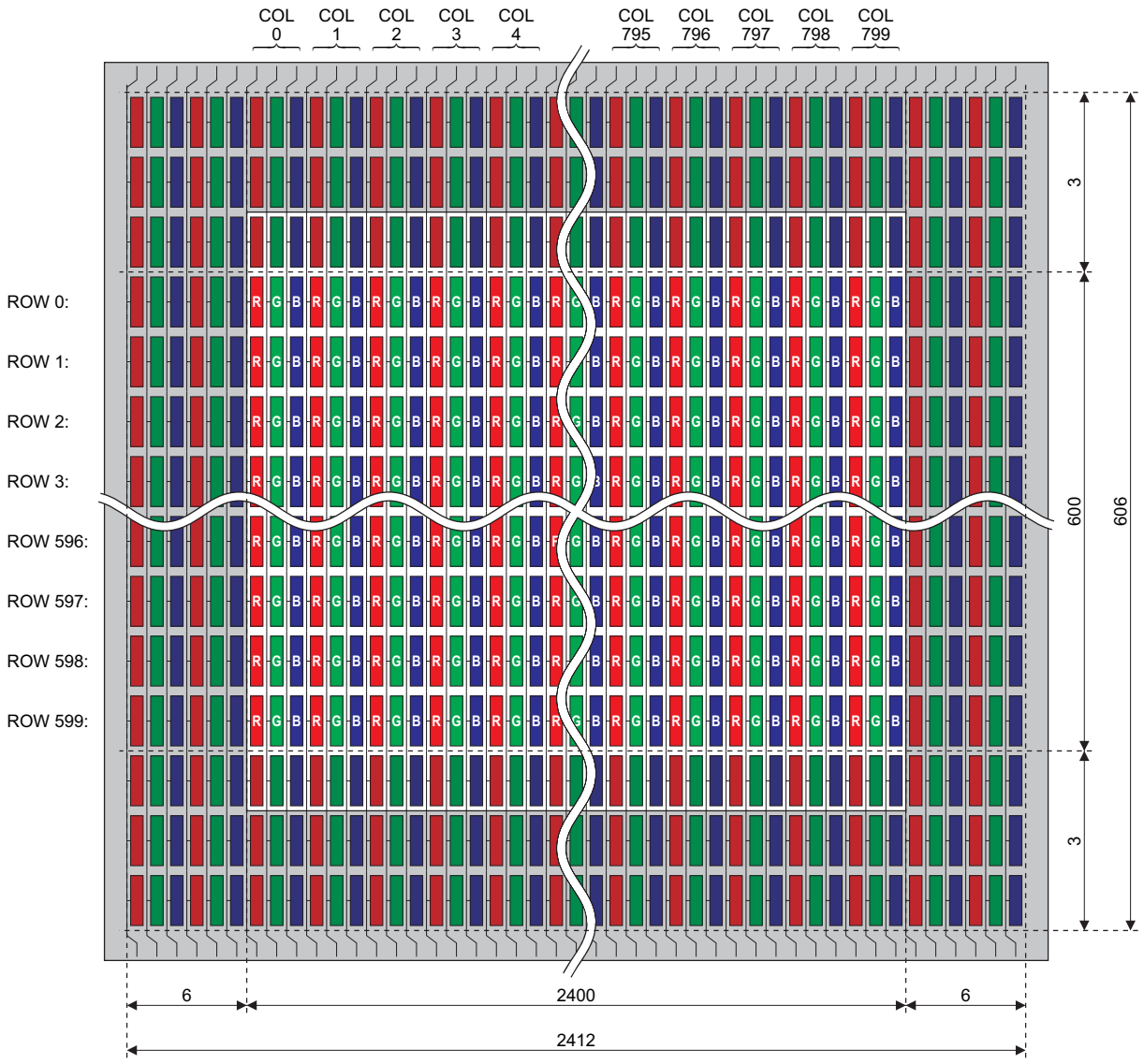

2. Electrical Specifications

Figure 2-1: CyberDisplay® SVGA LVS Block Diagram

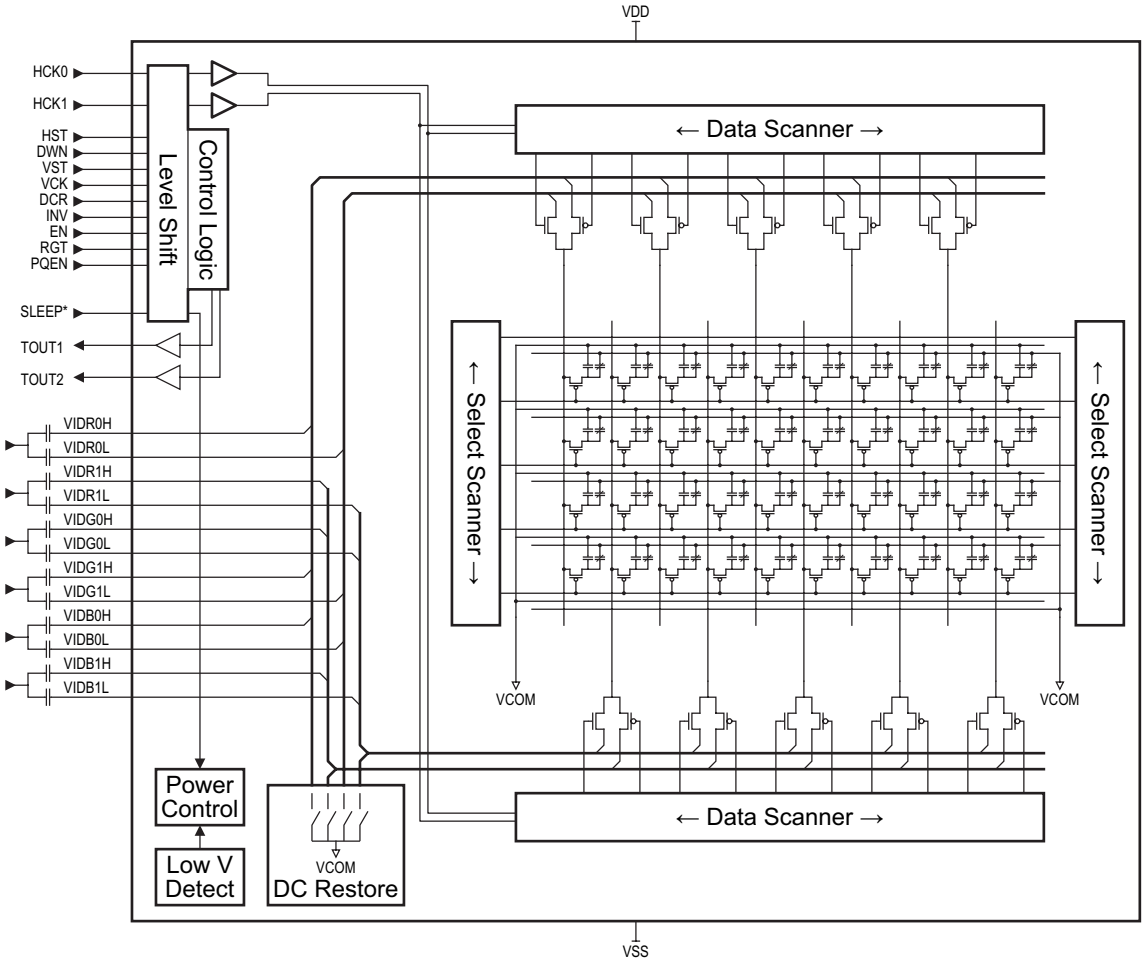

A block diagram of the CyberDisplay® SVGA LVS is shown in Figure 2-1. External capacitors couple 6 RGB video signals to the display's 12 video inputs. Integrated scanners drive the pixel array. Two horizontal data scanners switch the video inputs onto the column lines. The vertical scanners select rows one by one, driving from both ends of each row line.

2.1 Interface Signals

A 39-pin flex cable provides electrical connection to the display. Table 2-1 lists the signals and pin numbers.

Table 2-1: Interface Pin List

Pin	Symbol	Description	Pin	Symbol	Description
1	VCOM	Pixel common electrode	21	VIDR0H	High video input
2	VEE	Supply = 0V	22	VIDB0L	Low video input
3	VCC	Interface Supply	23	VIDB0H	High video input
4	VEE	Supply = 0V	24	VIDG1L	Low video input
5	HCK0	Horizontal clock	25	VIDG1H	High video input
6	HCK1	Horizontal clock	26	VIDG0L	Low video input
7	HST	Horizontal start	27	VIDG0H	High video input
8	DWN	Vertical scan direction	28	VIDR1L	Low video input
9	VST	Vertical start	29	VIDR1H	High video input
10	VCK	Vertical clock	30	VIDB1L	Low video input
11	INV	Inversion polarity control	31	VIDB1H	High video input
12	EN	Row enable	32	RSVO32	Reserved output
13	RSVI13	Reserved (tie to 0V)	33	TOUT1	Test output
14	RGT	Horizontal scan direction	34	TOUT2	Test output
15	PQEN	Precharge enable	35	RSVO35	Reserved output
16	RSVI16	Reserved (tie to 0V)	36	RSVO36	Reserved output
17	SLEEP*	Sleep mode	37	VSS	Supply
18	VDD	Supply	38	VEE	Supply = 0V
19	VSS	Suppy	39	VCOM	Pixel common electrode
20	VIDR0L	Low video input			

* Signal is active low

2.2 Supply and signal voltages

The diagram of Figure 2-2 illustrates supply and signal voltages. Most of the display's internal circuits are powered by VDD and VSS. The interface circuits also use the VCC supply, the voltage of which should be set to the high limit of the digital input swing (3.6V typ). The VCOM and VEE supplies are both at 0V.

Figure 2-2: Supply and Interface Voltages

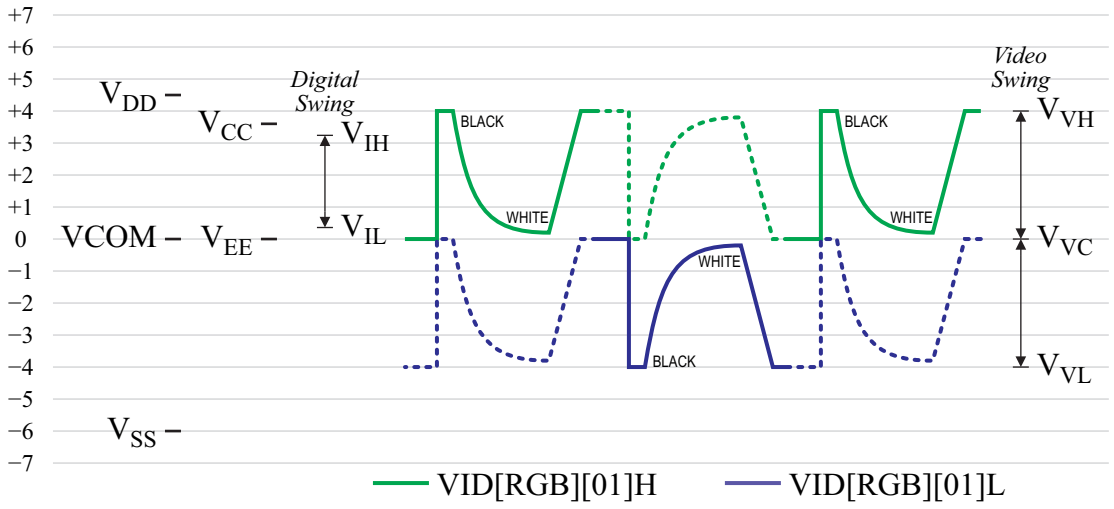

2.3 Horizontal timing

A horizontal timing diagrams for right and left scan are presented in Figure 2-3 and Figure 2-4. The row begins when the horizontal start pulse HST is sampled high on a rising edge of HCK0. The rising edge of VCK samples the INV input, which determines the video polarity to be used for the row. When INV is low, video will be read from the VID*H inputs, which must be held low for DC restore. Otherwise, when INV is high, then VID*L inputs are used and DC restore is performed at the high level. The DC restore interval is ended by the rising edge of HST.

The first rising edge of HCK0 to sample HST high is labeled edge 0, the following rising edge of HCK1 is edge 1, and so on. Video data for the first two active pixels are sampled on clock edge 6 (pixel columns 0–1); the last two pixels are sampled on edge 405 (pixel columns 798-799).

2.4 Vertical timing

Figure 2-5 and Figure 2-6 show the vertical timing for scanning down and up, respectively. The frame begins when VST is samples high on the rising edge of VCK. The INV polarity alternates with each row, and the phase of INV alternates with each frame.

2.5 Sleep Mode

The CyberDisplay® SVGA LVS enters sleep mode when the SLEEP* input is driven low. All supply levels must be maintained at their normal operating voltages, but other inputs to the display are ignored. Because the pixel array is driven to the white state, it may be desirable to turn off the backlight before putting the display to sleep.

The display will also enter sleep mode when the integrated low-voltage detect circuit determines that power is being removed from the display.

2.6 Electrical Characteristics

Permanent damage to the display may result if the Absolute Maximum Ratings in Table 2-2 are exceeded. The Absolute Maximum Ratings are not typical operating conditions.

Table 2-2: Absolute Maximum Ratings

Note: All voltages relative to V_{EE}=0.

Parameter/Condition	Symbol	Min	Max	Units
Supply voltage — source	V_{DD}	– 0.5	6.0	V
Supply voltage — source	V_{CC}	– 0.5	V_{DD}+ 0.5	V
Supply voltage — sink	V_{SS}	– 7.0	0.5	V
All inputs	V_I	V_{SS}– 0.5	V_{DD}+ 0.5	V

Table 2-3: Recommended DC Operating Conditions

Notes: All voltages relative to V_{EE}=0.

Parameter	Symbol	Min	Typ	Max	Units
Supply voltage	V_{DD}	4.75	4.8	5.0	V
Supply voltage	V_{CC}	3.3	3.6	3.9	V
Supply voltage	V_{SS}	–6.3	–6.0	–5.7	V
Video high level	V_{VH}		3.5	3.8	V
Video center level	V_{VC}		0		V
Video low level	V_{VL}	–3.8	–3.5		V
Video balance	V_{VH} +V_{VL}	–100		100	mV
Video headroom	V_{DD} –V_{VH}	1.0	1.3		V
Video footroom	V_{VL} –V_{SS}	1.8	2.5		V
Common electrode voltage	V_{COM}		0		V
Digital input high	V_{IH}	0.9 V_{CC}			V
Digital input low	V_{IL}			0.1 V_{CC}	V

Table 2-4: Electrical Characteristics

Notes: Under nominal conditions of Table 2-3.

Parameter	Symbol	Min	Typ	Max	Units
Operating current	I_{DD}		8	12	mA
Operating current	I_{CC}		2	3	mA
Operating current	I_{EE}		25		µA
Operating current	I_{SS}		10	15	mA
Sleeping current	I_{DDS}		100		µA
Sleeping current	I_{CCS}		20		µA
Sleeping current	I_{EES}		20		µA
Sleeping current	I_{SSS}		100		µA
Input current	I_I	– 10		10	µA
Input capacitance : VID*H/L	C_{VID}		40	50	pF
Input capacitance: digital inputs	C_I			10	pF
VCOM capacitance	C_{VCOM}			1	nF

2.7 Timing Characteristics

Table 2-5: Electrical Characteristics and Recommended AC Operating Conditions

Parameter	Symbol	Min	Typ	Max	Units
Frame period	t_V		16.6		ms
Frame rate	$1/t_V$		60.3		Hz
Line period	t_H		26.4		µs
Line frequency	$1/t_H$		64		kHz
Clock period	t_{CP}	70	100		ns
Clock frequency	$1/t_{CP}$		10	15.1	MHz
Pixel sampling period	t_{PP}	$(t_{CP}/2)–5$		$(t_{CP}/2)+5$	ns
HCK1–HCK2 clock skew	t_{CSK}	–5		5	ns
Setup to HCK0	t_{HS}	20			ns
Hold after HCK0	t_{HH}	20			ns
VCK low pulse width	t_{KL}	1	26.2		µs
VCK high pulse width	t_{KH}	150	200		ns
Setup to VCK	t_{VHS}	75	100		ns
Hold after VCK	t_{VHH}	75	100		ns
Video DC restore pulse width	t_{HW}	2			µs
Video DC restore setup	t_{WS}	0			ns
Video DC restore hold	t_{WH}	150			ns
VCK to EN delay	t_{KED}	0.15	3.15		µs
EN to VCK delay	t_{EKD}	100			ns
EN high pulse width	t_{VEH}	2	22.85		µs
EN to video delay	t_{EVD}	100			ns
Video to EN delay	t_{VED}	1.2			µs
Video setup	t_{VS}	–5			ns
Video hold	t_{VH}	39			ns
Test output delay	t_{TD}				ns

Figure 2-3: Horizontal Timing, Right Scan

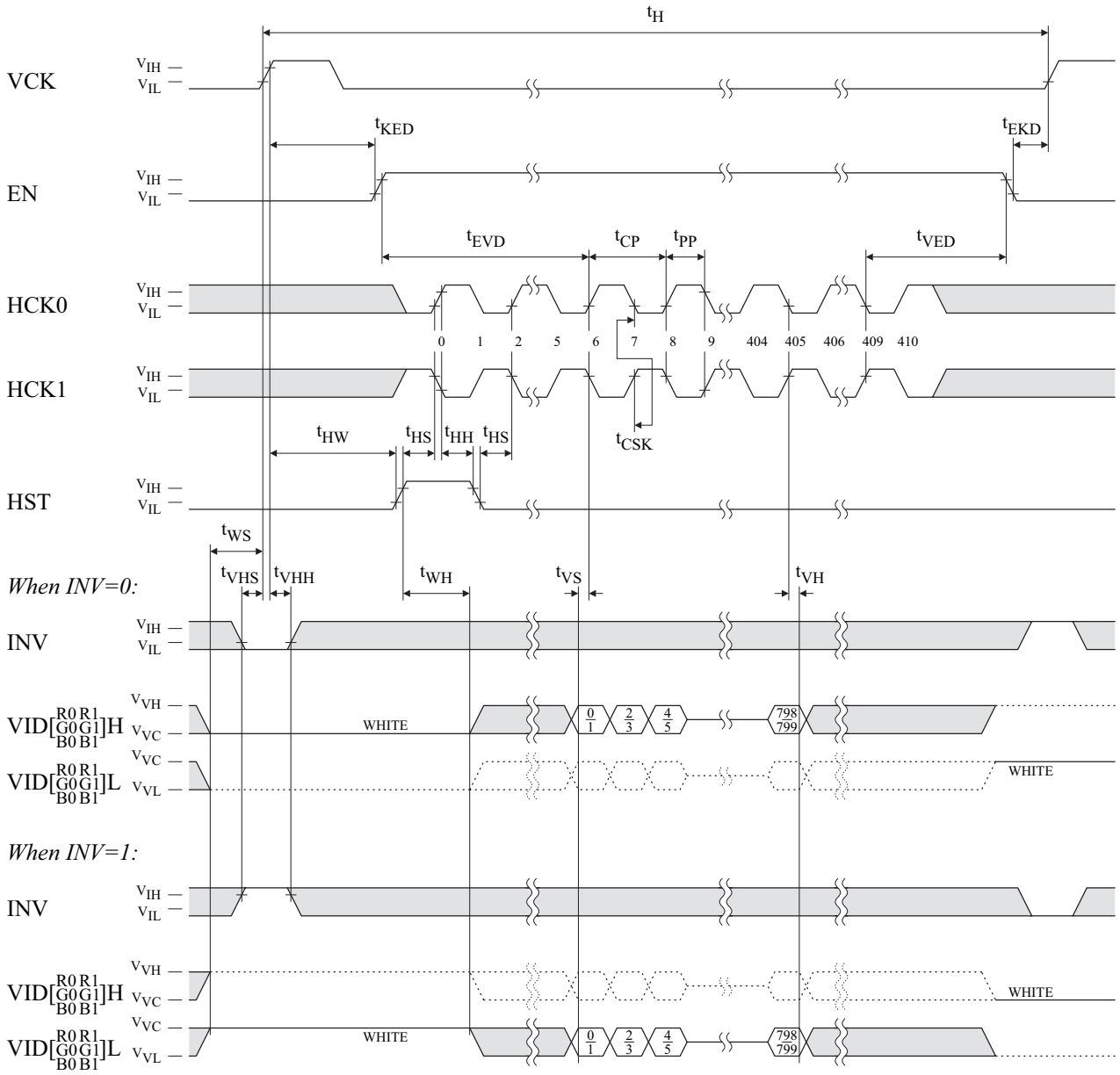

Figure 2-4: Horizontal Timing, Left Scan

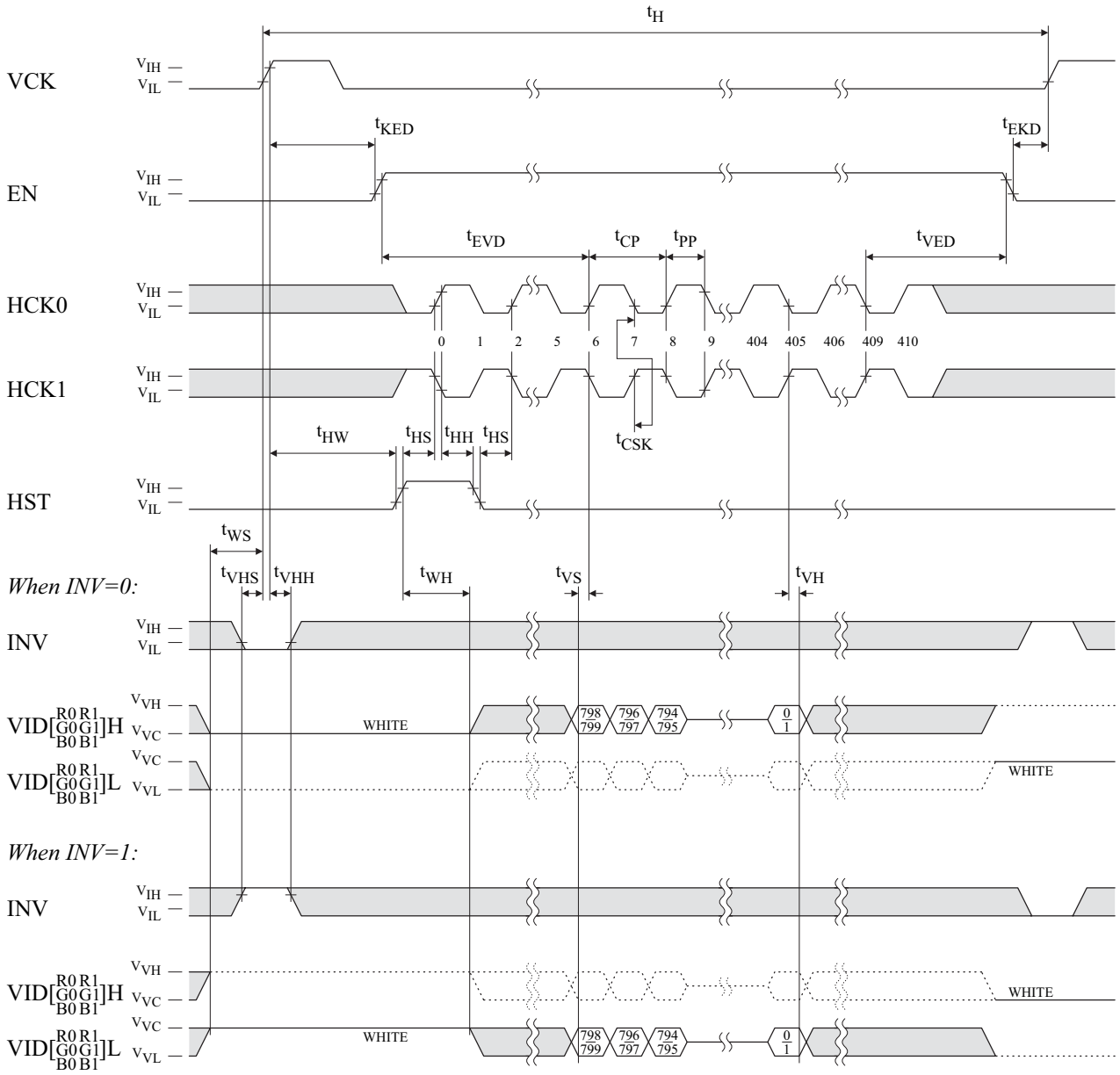

Figure 2-5: Vertical Timing, Down Scan

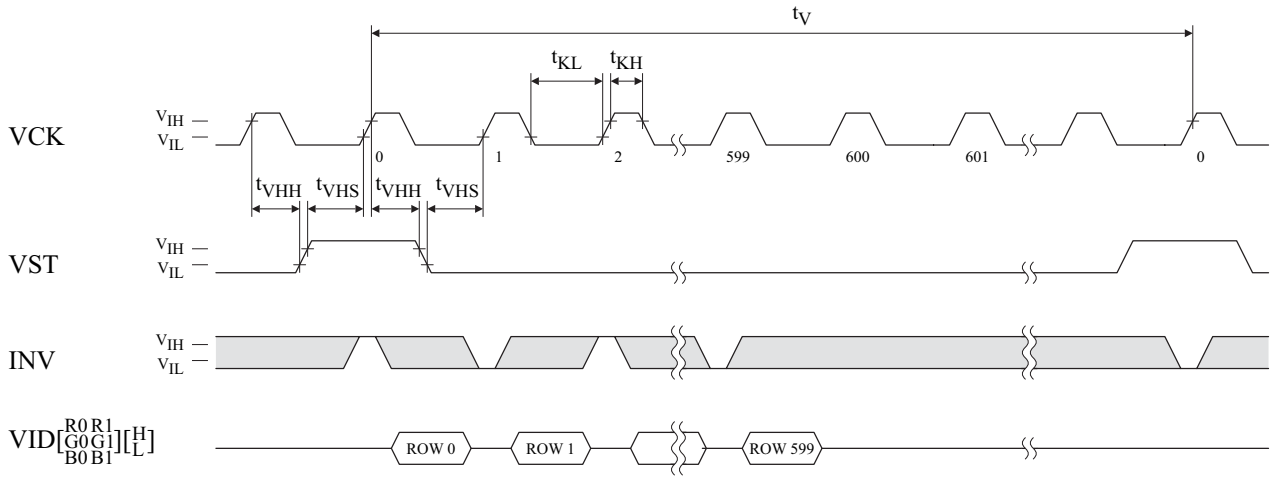

Figure 2-6: Vertical Timing, Up Scan

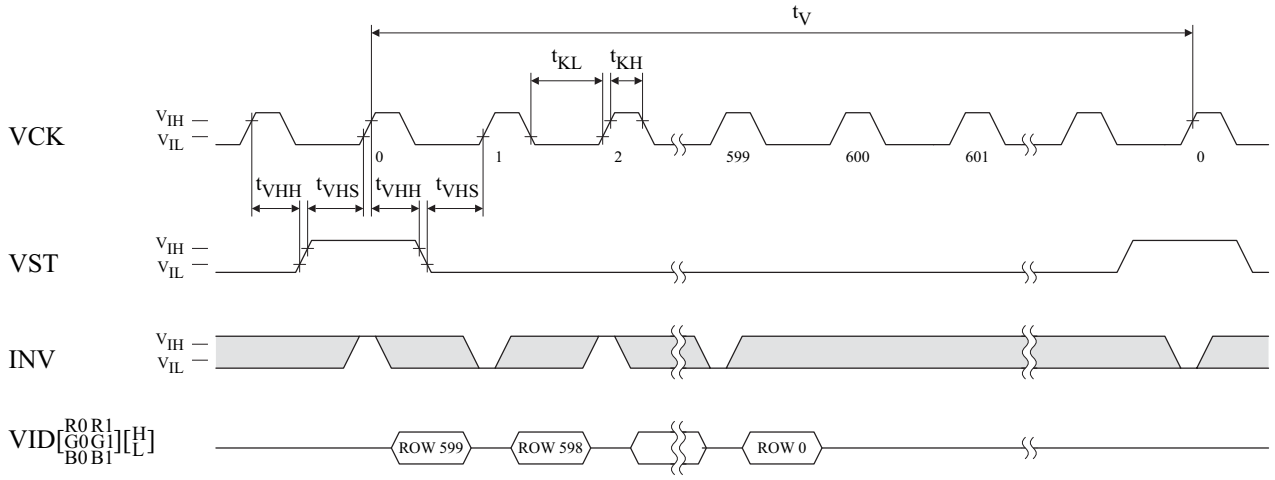

2.8 Parameterized Timing

When designing display driver ICs or electronics, it may be desirable to define the display timing in terms of configurable parameters. This method can provide flexibility to work with unanticipated video formats, or to fine-tune the timing to optimize performance.

Figure 2-7 defines a set of timing parameters appropriate for use with the CyberDisplay® SVGA LVS. The number of pixels per line (H_LEN) will be determined by the video format, after which the other parameters may be chosen to satisfy the constraints of Table 2-5. Timing parameter values for VESA standard formats at 60 Hz and 85 Hz are listed as examples in Table 2-6.

Figure 2-7: Horizontal Timing Parameters

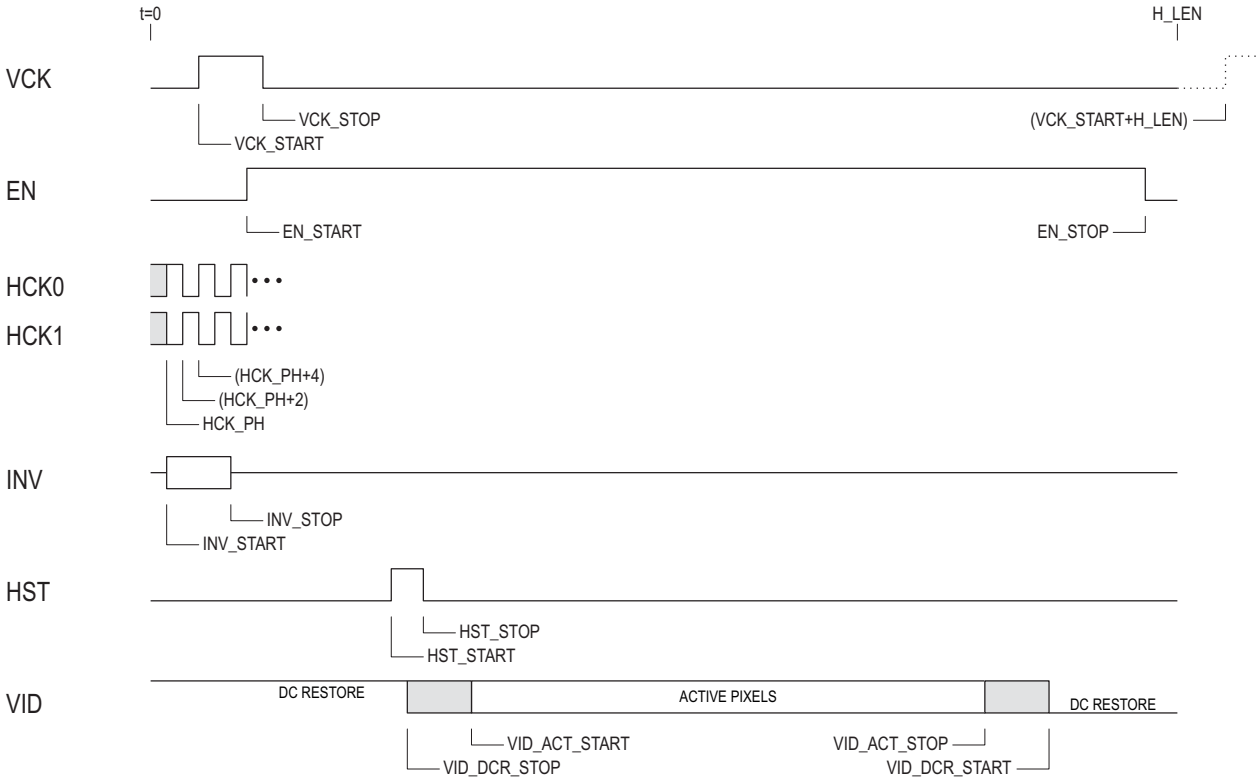

Table 2-6: Example Parameter Values for Standard Formats

Parameter	VESA 800 × 600 @ 60 Hz	VESA 800 × 600 @ 85 Hz	Units
Pixel clock	40.000	56.250	MHz
H_LEN	1056	1048	clocks
VCK_START	6	6	clocks
VCK_STOP	18	18	clocks
EN_START	128	124	clocks
EN_STOP	1040	1032	clocks
HCK_PH	0	0	clocks
INV_START	0	0	clocks
INV_STOP	12	12	clocks
HST_START	126	122	clocks
HST_STOP	130	126	clocks
VID_DCR_STOP	135	131	clocks
VID_ACT_START	139	135	clocks
VID_ACT_STOP	939	935	clocks
VID_DCR_START	1048	1040	clocks

3. Optical Specifications

3.1 Optical Characteristics

Table 3-1: Optical Characteristics

Item			Symbol	Notes	Min	Typ.	Max	Unit
Contrast ratio	Vsig = 0 ± 3.5 V		CR25	1	70	100	--	--
Optical Transmittance		25°C	T	2	0.8	1.3	1.8	%
Chromaticity	W	X	Wx	3	0.280	0.320	0.360	CIE standards
		Y	Wy		0.280	0.320	0.320	
	R	X	Rx		0.530	0.570	0.610	
		Y	Ry		0.300	0.340	0.380	
	G	X	Gx		0.280	0.320	0.360	
		Y	Gy		0.500	0.540	0.540	
	B	X	Bx		0.120	0.160	0.200	
		Y	By		0.060	0.100	0.140	
V-T characteristics	V_{90}	25°C	V_{90-25}	4	0.3	0.5	0.7	V
	V_{50}	25°C	V_{50-25}		0.8	1.1	1.4	
	V_{10}	25°C	V_{10-25}		1.6	2.0	2.4	
Response time	ON time	25°C	ton_{25}	5	--	10	15	ms
	OFF time	25°C	$toff_{25}$		--	30	40	
Flicker			F	6	--	--	-30	dB

Notes On Measurement Conditions:
1. CR25 = (Luminance White)/(Luminance Black). System I
2. T = (Luminance White)/(Luminance Backlight). System I
3. CIE Standard 1931. System II. Reference backlight (x=0.310, y=0.300).
4. V-T is relationship of signal amplitude to transmittance. System I
5. VESA 2.0 standard. System I + Oscilloscope
6. 20log(AC/DC) @ 50% transmittance. System I + Spectrum Analyzer

System I: Equipment: PR-880 @ 1° aperture

System II: Equipment: PR-650 @ 1° aperture

All measurements representative for framed packaging (polarizers attached).

4. Environmental Specifications

4.1 Flex Cable Interconnect

The flexible PC cable is strain relieved, but tugging forces should be limited to less than 0.5 kg perpendicular to the display and less than 1 kg parallel to the display. The minimum inside bend radius for the cable is .75 millimeters. Repeated reformings are not recommended.

4.2 Display Reliability

Table 4-1: CyberDisplay® SVGA LVS Display Environmental Specification

Storage Temperature	–20°C to 70°C
Operating Temperature	0°C to 60°C
Humidity – Storage	40°C at 80% humidity for 240 hours
Vibration	20 to 2,000 Hz, 6G's RMS maximum 3 axes 10 minutes each axis
ESD – Human Body Model	1000V Electrical Discharge

5. Mechanical Specifications

5.1 Mechanical drawings

Figure 5-1 and Figure 5-2 provide mechanical specifications for the LCD die and LCD display with flex assembly, respectively. Part KCD-KDCS-WB specifies the assembly of a polarized display mounted in a black polycarbonate frame, an outline drawing of which is provided in Figure 5-3. Part KCD-KDCS-WA specifies the same framed assembly but with adhesive applied external to the frame at the flex cable interface.

Figure 5-1: CyberDisplay® SVGA LVS Display and Pixel Array Area

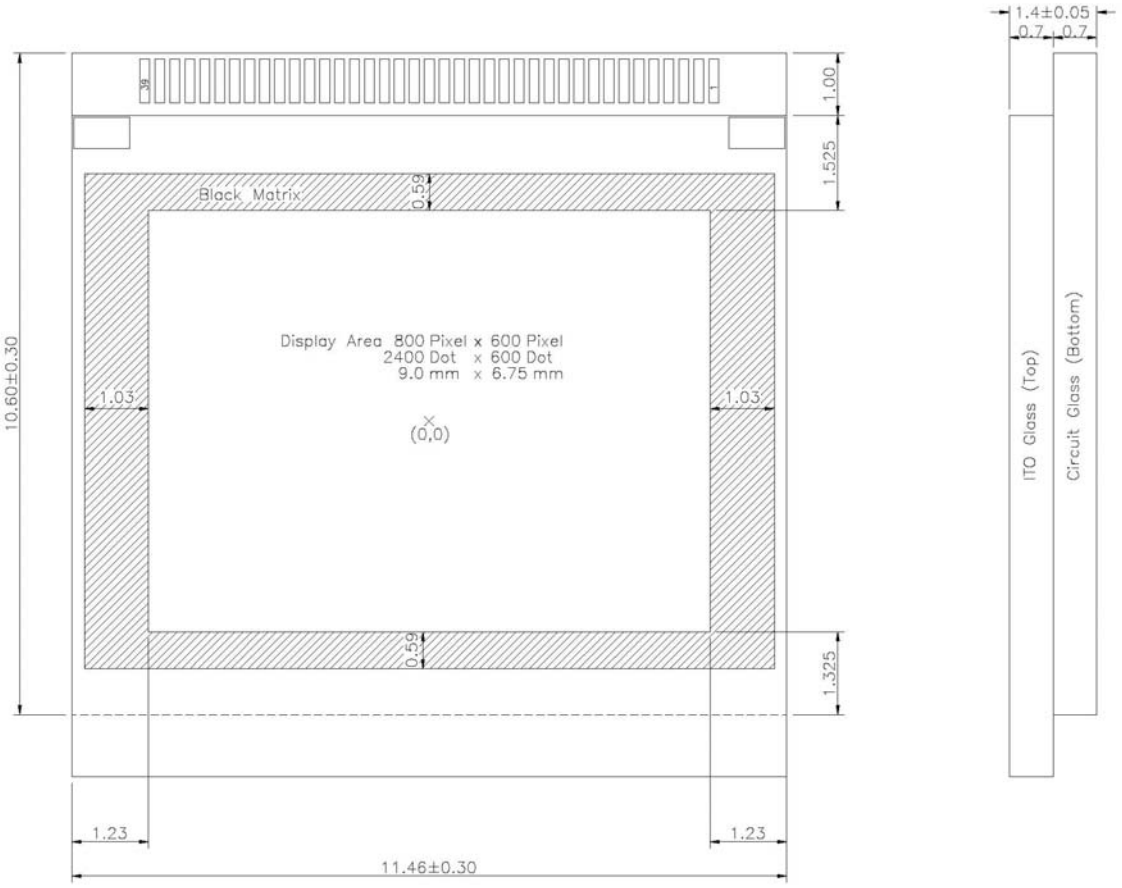

All dimensions in mm.

Figure 5-2: CyberDisplay® SVGA LVS Display and Flex Assembly

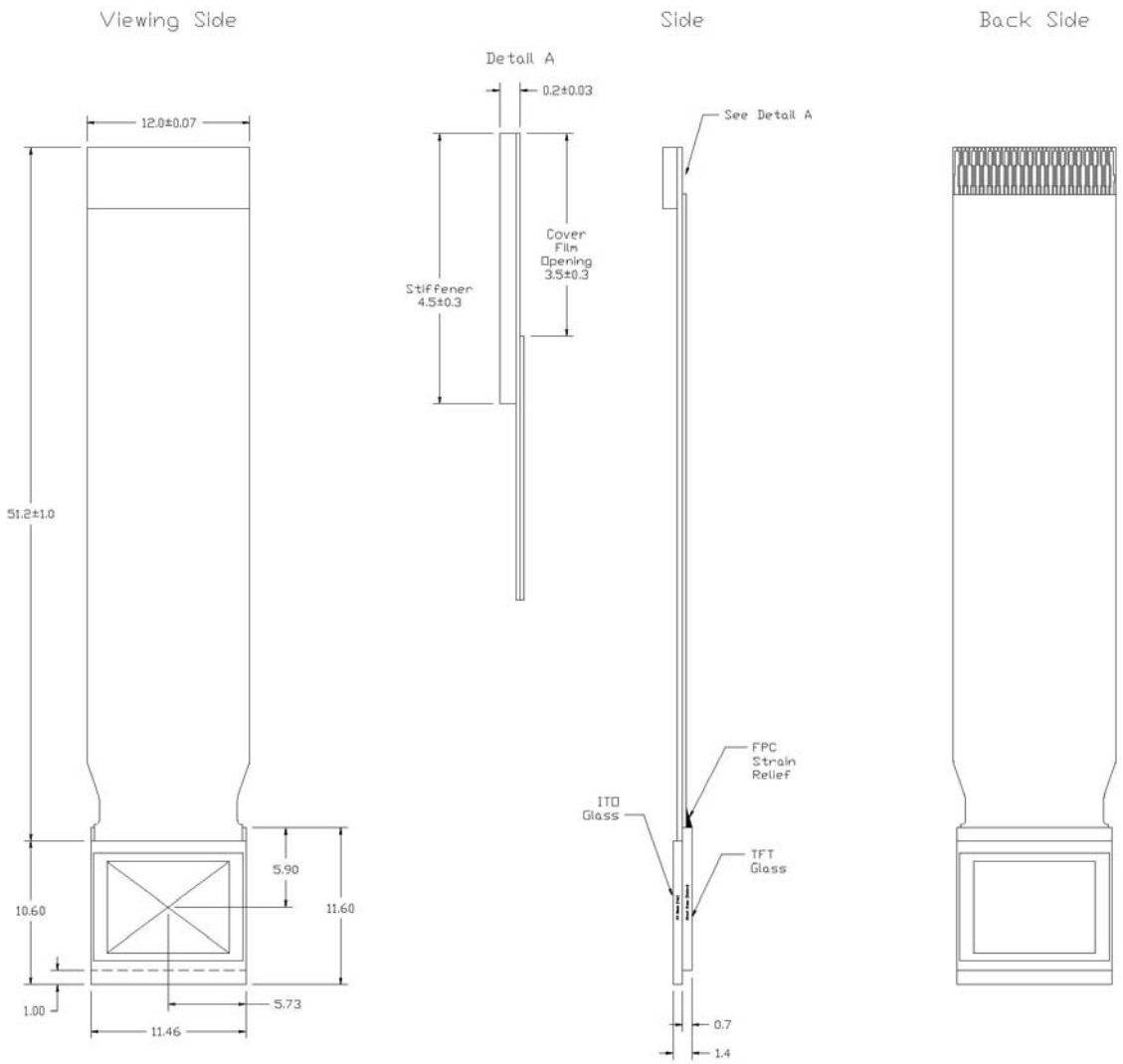

All dimensions in mm.

Figure 5-3: CyberDisplay® SVGA LVS Outline Drawing (KCD-KDCS-WA / -WB)

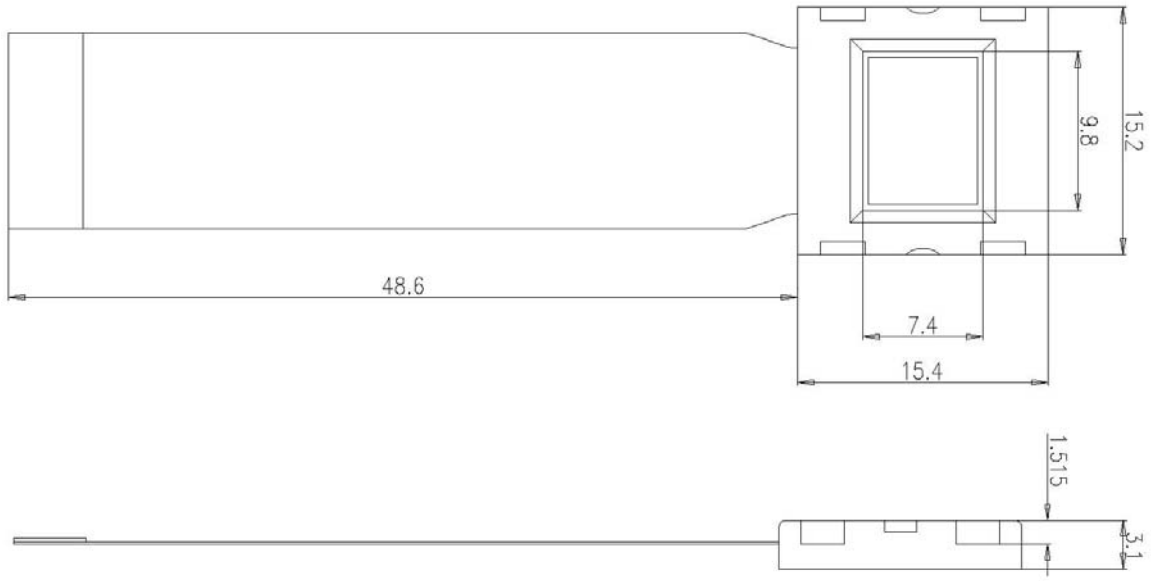

All dimensions in mm.

5.2 Display Flex Cable Interconnect

The flexible FPC cable uses a 39-pin, 0.3 mm pitch contact pad area at the connector end. A detail view of the flex cable interconnect is provided in Figure 5-4.

Figure 5-4: Display FPC Interconnect – Contact Pad Area

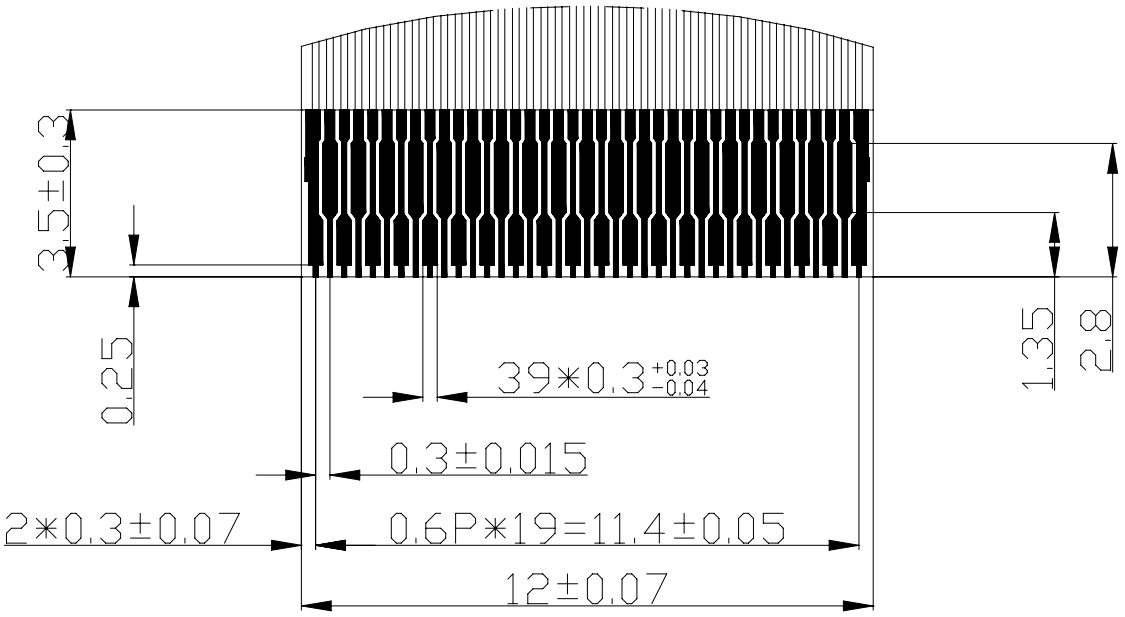

6. Display Appearance

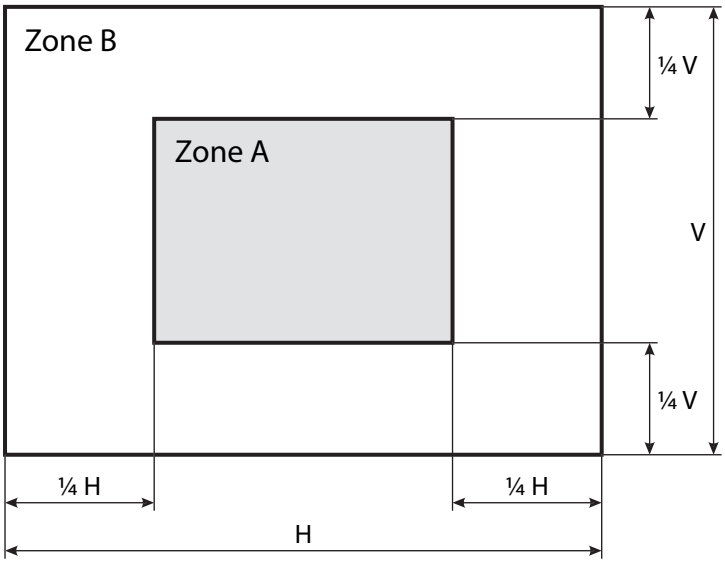

Table 6-1: Display Appearance

Defect Type	Defect Criteria
Image	No obvious partial or faded image, streaking or shadow, unstable image, alternating columns or rows
Line	No lines out Very faint lines allowable based on limit samples
Pixel	See Figure 6-1
Adjacent pixels	Two: Same criteria as for pixel defects, based on aggregate brightness (See Figure 6-1) Three or more: Not allowed
Polarizer / particles	See Figure 6-1

Test Conditions: Test board runs in row inversion at 60 Hz frame rate. Visual focal plane is on the pixel array.
Limit Samples: Limit samples to be used for pixel and other cosmetic defects as required.

Figure 6-1: Display Appearance Specification

ZONE	DEFECT	NUMBER
A	S or M	4
	L	2
B	S or M	10
	L	5

where:

Small (S) defect differs from nominal pixel brightness by 10–25%.
Medium (M) defect differs from nominal pixel brightness by 25–75%.
Large (L) defect differs from nominal pixel brightness by ≥ 75%.
Defect can be black or white spot.