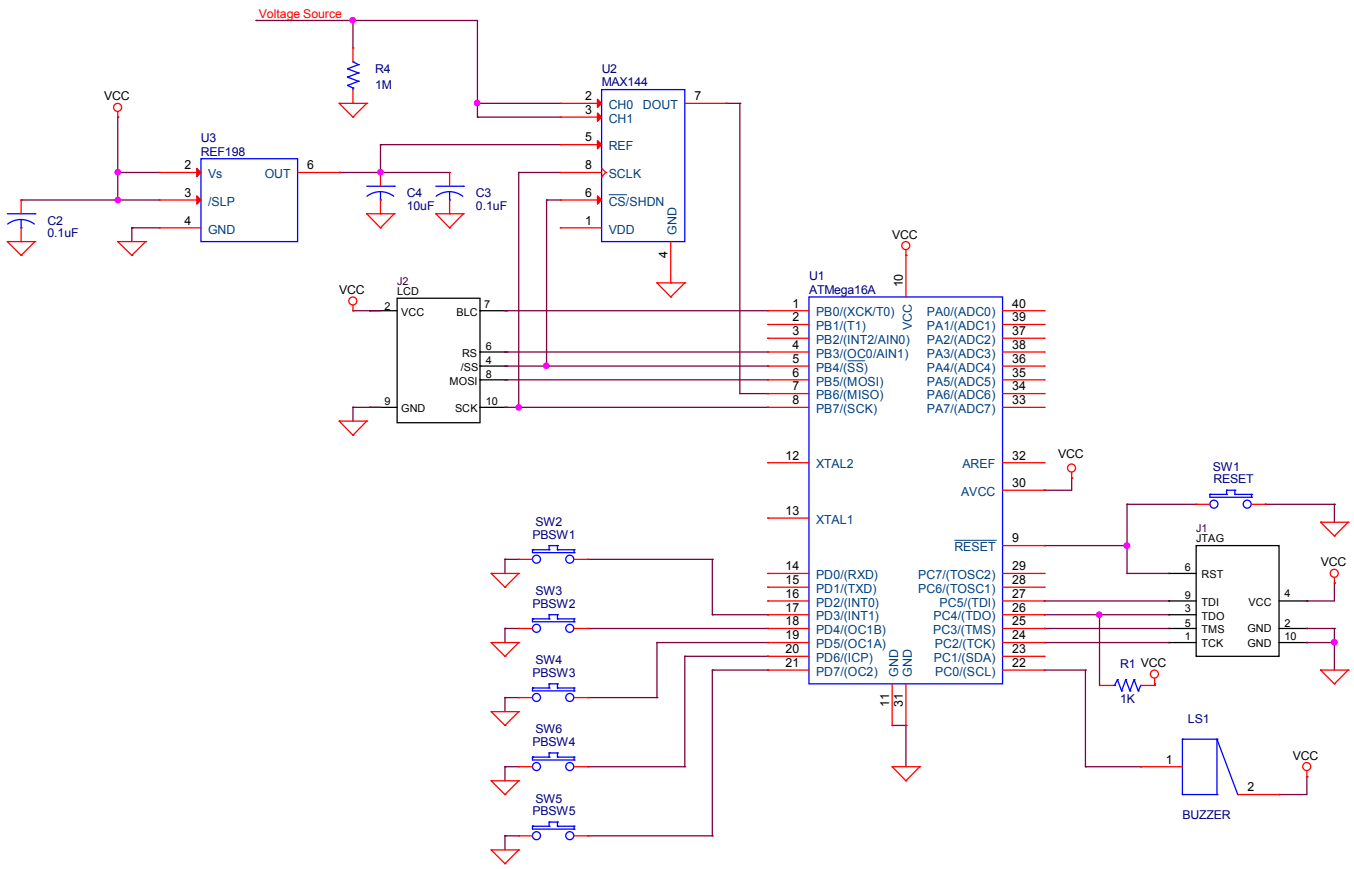

Title	Lab7	
Size B	Document Number Ng, Radhakrishnan	Rev 1V
Date: Monday, November 10, 2014	Sheet 1 of 1	