CCM Averaged-Switch Model
PSpice Implementation: ccm1

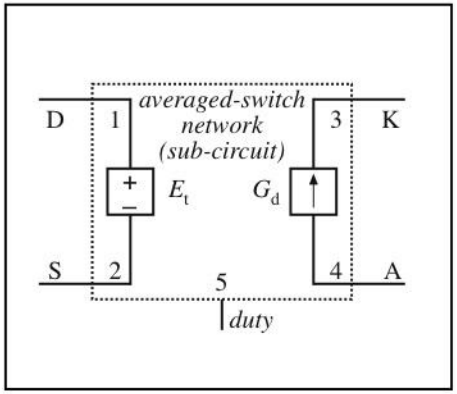

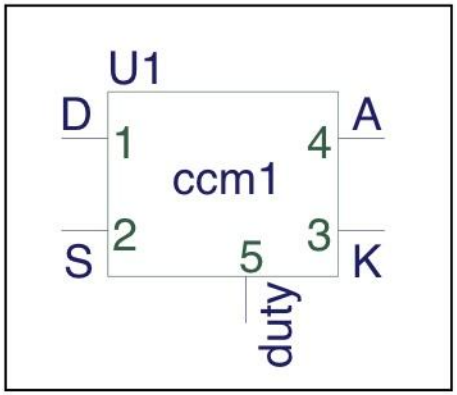


```
*******************************************************
* MODEL: ccm1
* Application: two-switch PWM converters
* Limitations: ideal switches, CCM only, no transformer
*******************************************************
* Parameters: none
*******************************************************
* Nodes:
* 1: transistor+ (D)
* 2: transistor- (S)
* 3: diode cathode (K)
* 4: diode anode (A)
* 5: duty ratio (duty)
*******************************************************
.subckt ccm1 1  2  3  4  5
Et 1 2 value={(1-v(5))*v(3,4)/v(5)}
Gd 4 3 value={(1-v(5))*i(Et)/v(5)}
.ends
*******************************************************
```

Comments

- Subcircuit **ccm1** is implementation of a large-signal, nonlinear averaged model of the switch network
- Averaged circuit model of the converter is obtained simply by replacing switching devices with the averaged-switch subcircuit model
- Linearization and AC small-signal analysis are performed by the simulator
- Small-signal dynamic responses can be easily generated for different operating points or different sets of parameter values

CCM Simulation Problem

1 The buck converter illustrated in Fig. 1 operates in the continuous conduction mode, and supplies 5 V at 10 A to load R. The element values are $L = 6\ \mu\text{H}$, $C = 200\ \mu\text{F}$. All elements are ideal.

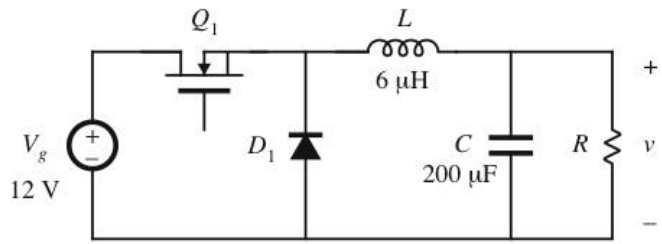

Fig. 1 CCM buck converter.

(a) Use averaged switch modeling and computer simulation to plot the magnitude and phase of the control-to-output transfer function $G_{vd}(s)$. You should turn in: the plots of $\| G_{vd} \|$ and $\angle G_{vd}$, and your netlist or schematic.

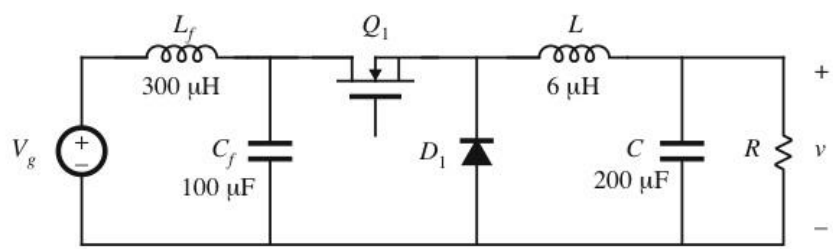

Fig. 2 Addition of an input filter to the CCM buck converter of Fig. 1.

(b) An input filter is now added, as illustrated in Fig. 2. Repeat Part (a): use averaged switch modeling and computer simulation to plot the magnitude and phase of the control-to-output transfer function $G_{vd}(s)$. You should again turn in the plots of $\| G_{vd} \|$ and $\angle G_{vd}$, and your netlist or schematic. Does the input filter substantially change the magnitude of G_{vd}? the phase? How many poles and zeroes does $G_{vd}(s)$ now contain?

(c) In the circuit of Fig. 2, the load takes a step change from 10 A to 2 A (i.e., the value of R changes). Use computer simulation to plot the output voltage response to this change in load current. How long is the settling time (i.e., the time from the step until the output voltage remains within 1% of 5 V)?

Basic CCM Buck Example (Part a)
Netlist

```
CCM Simulation Problem, part (a)
Vg 1 0 dc 12
Rg 1 1a 1u
Xswitch 1a 2 2 0 4 CCM1
.lib switch.lib
L1 2 2a 6u
RL1 2a 3 1u
C 3 0 200u
R 3 0 0.5
vd 4 0 dc 0.4166667 ac 1
.probe
.ac DEC 201 10 100k
.end
```

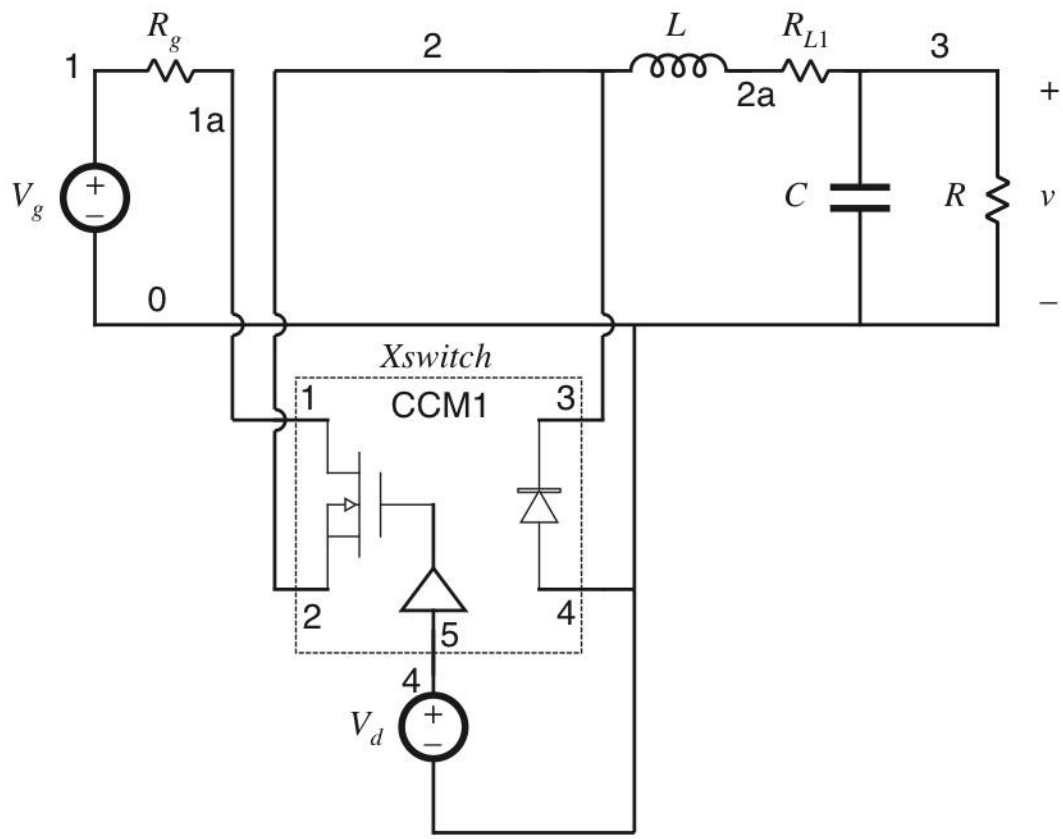

Probe output: part (a)

Control-to-output transfer function

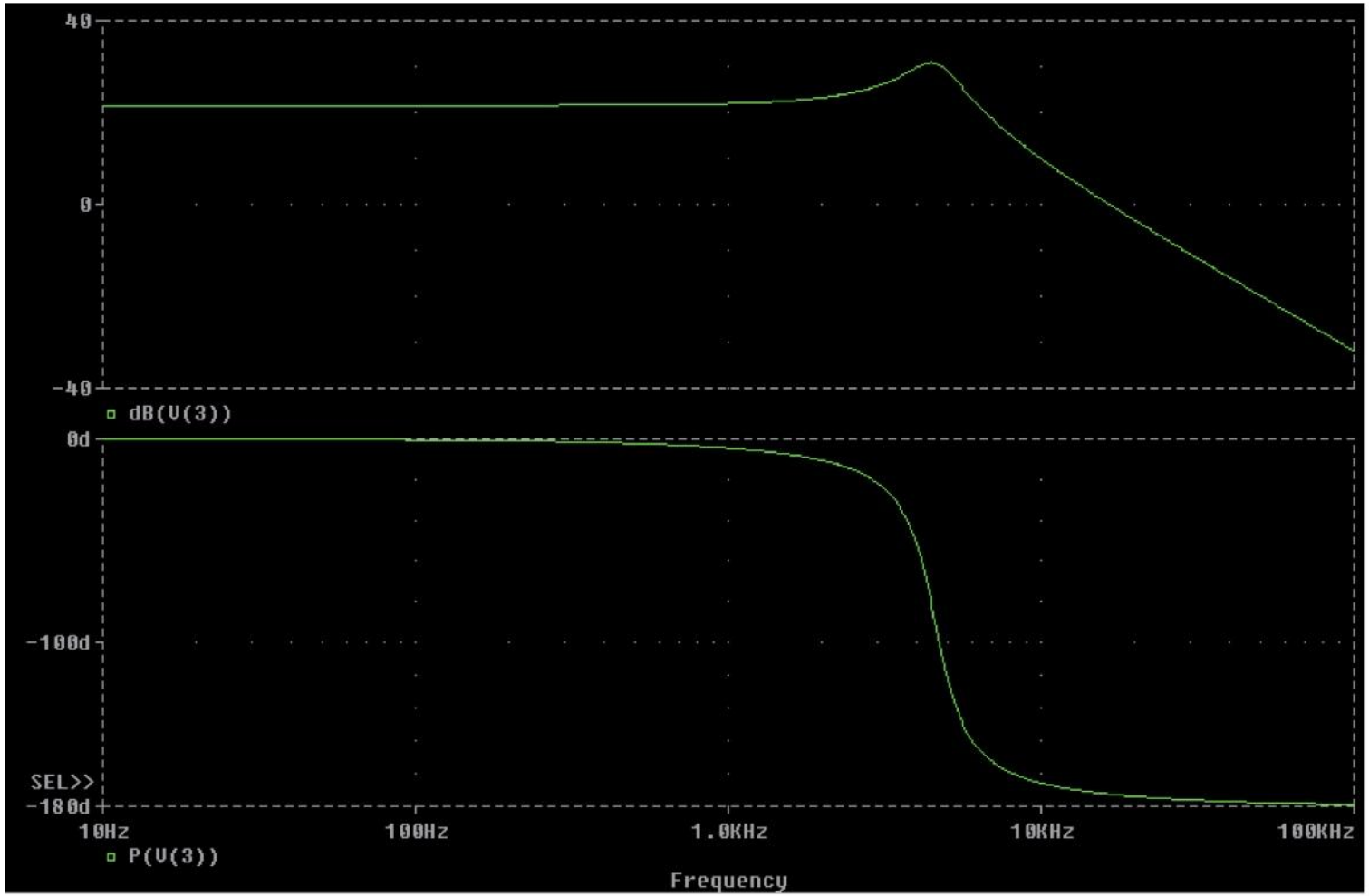

Buck with input filter: Part (b) Netlist

```
CCM Simulation Problem, part (b)
Vg 1 0 dc 12
Rg 1 1a 1u
Lf 1a 1b 300u
Cf 1b 0 100u
Xswitch 1b 2 2 0 4 CCM1
.lib switch.lib
L1 2 2a 6u
RL1 2a 3 1u
C 3 0 200u
R 3 0 0.5
vd 4 0 dc 0.4166667 ac 1
.probe
.ac DEC 201 10 100k
.end
```

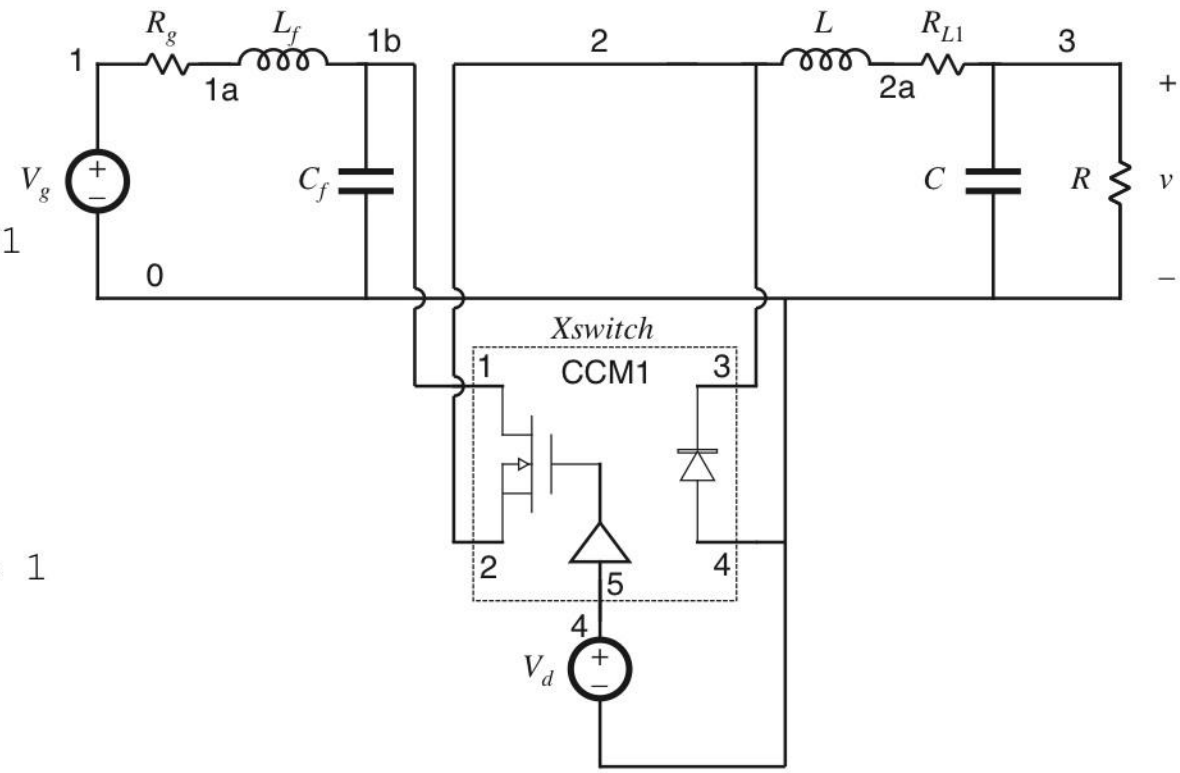

Buck with input filter: Part (b)

Probe output, control-to-output transfer function

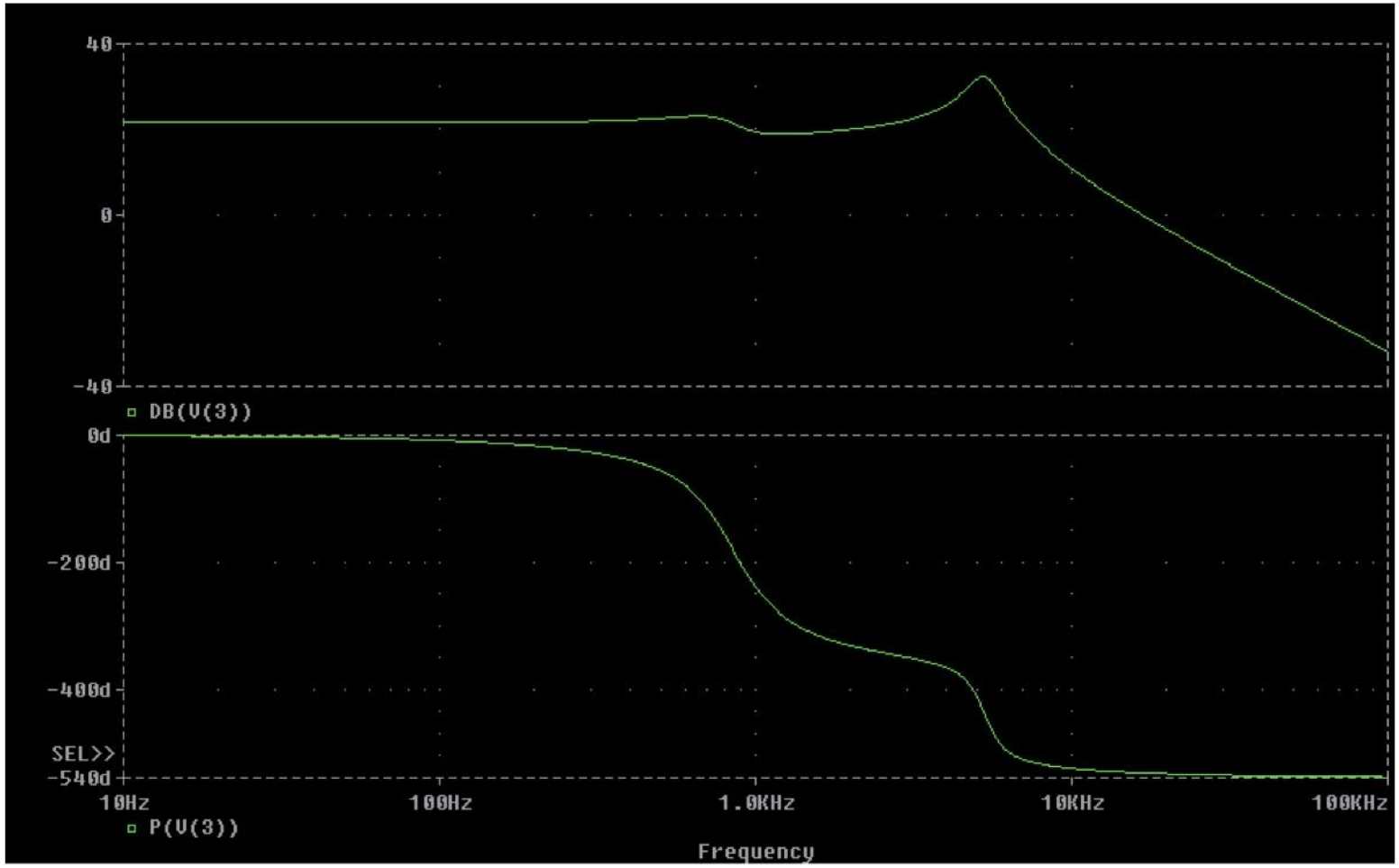

Buck with input filter: Part (c)

Transient response: netlist

```
CCM Simulation Problem, part (c)
Vg 1 0 dc 12
Rg 1 1a 1u
Lf 1a 1b 300u IC=4.167
Cf 1b 0 100u IC=12
Xswitch 1b 2 2 0 4 CCM1
.lib switch.lib
L1 2 2a 6u IC=10
RL1 2a 3 1u
C 3 0 200u IC=5
Sload 3 0 5 0 load
.model load VSWITCH Ron=0.5 Roff=2.5
VLC 5 0 PULSE(-2 2 0 0 0 50M 101M)
RLC 5 0 1Meg
vd 4 0 dc 0.4166667
Rd 4 0 1Meg
.probe
.tran 5u 100m uic
.end
```

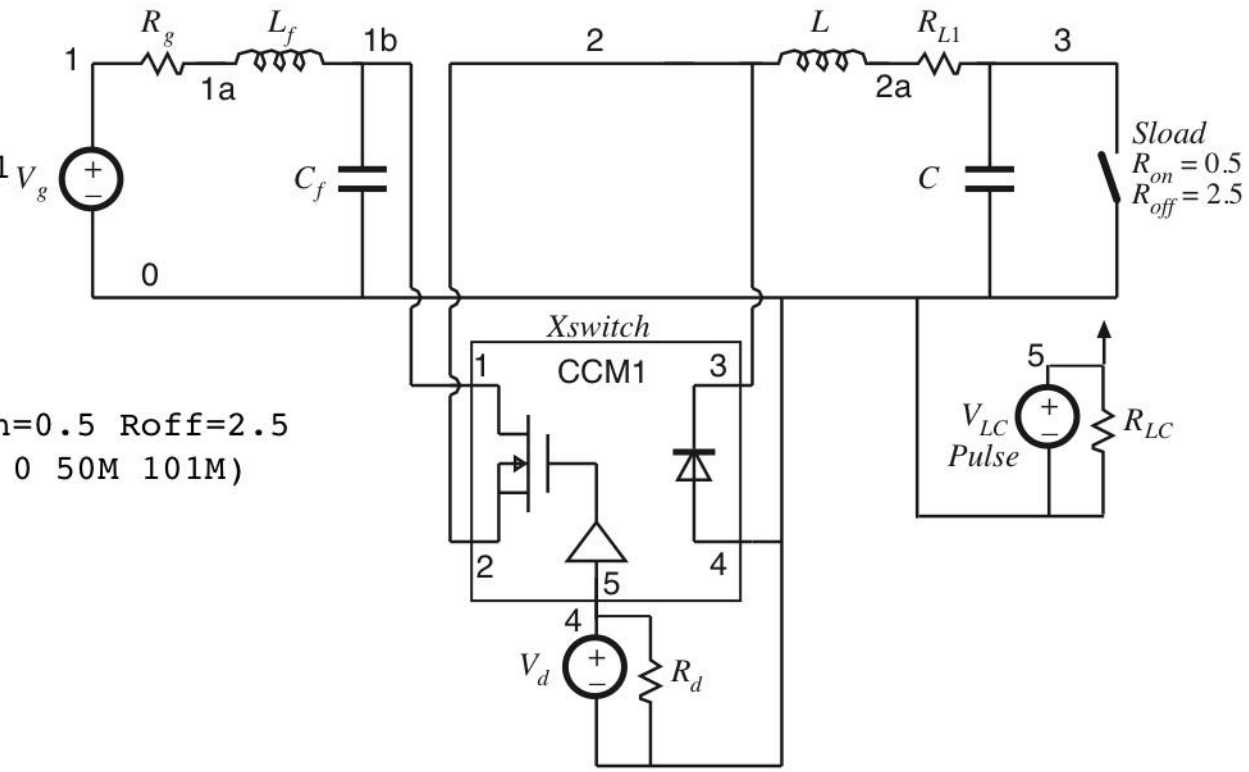

Part (c): Probe output

Output voltage transient response to step change in load

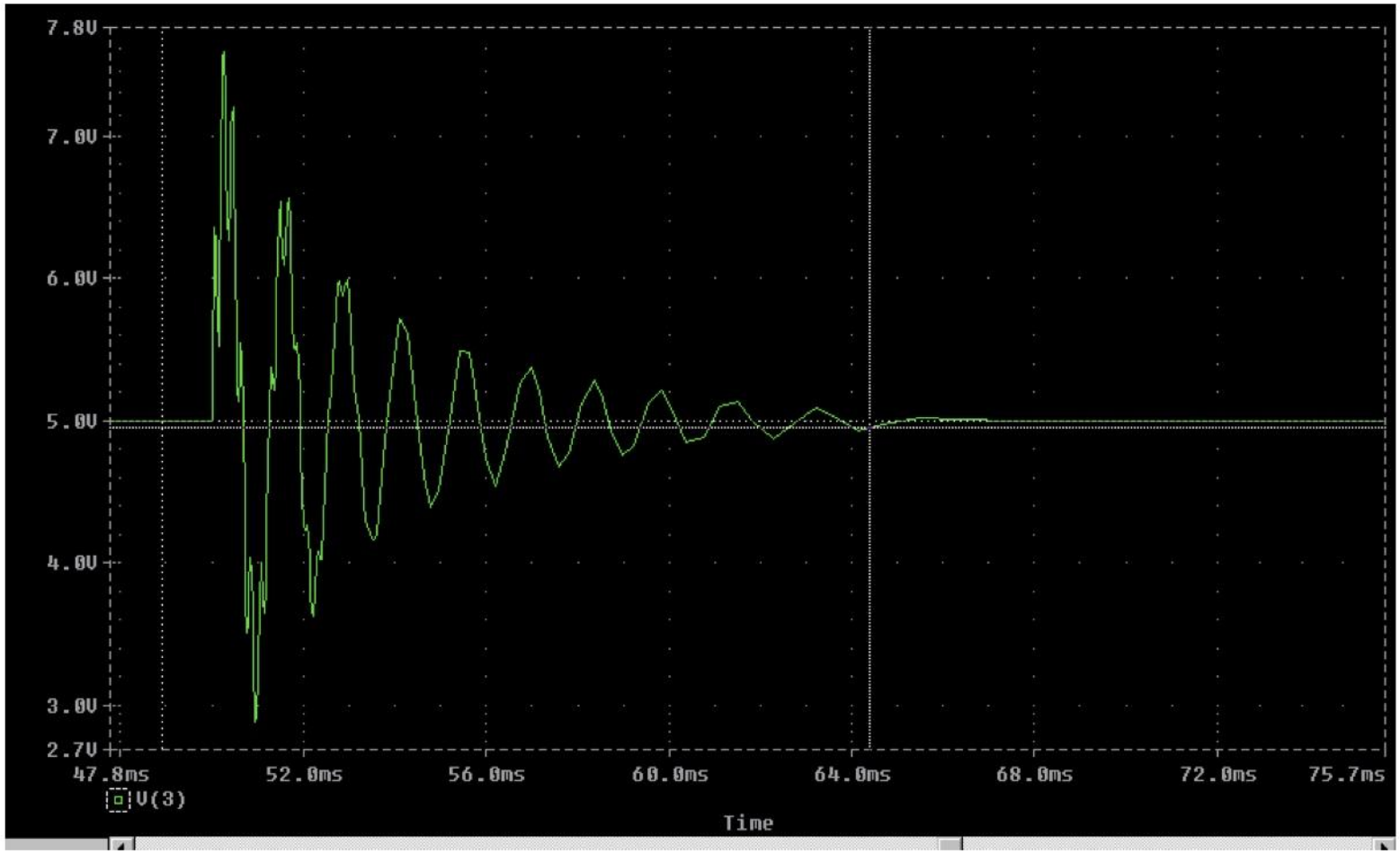

Modeling conduction loss

SEPIC example

MOSFET R_{on}, diode V_D

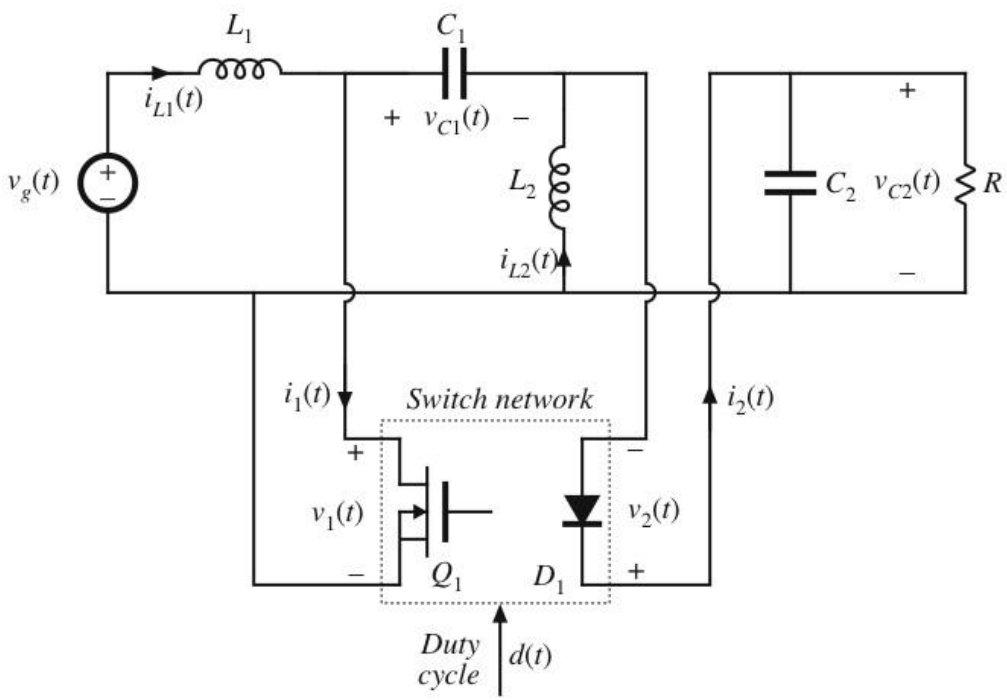

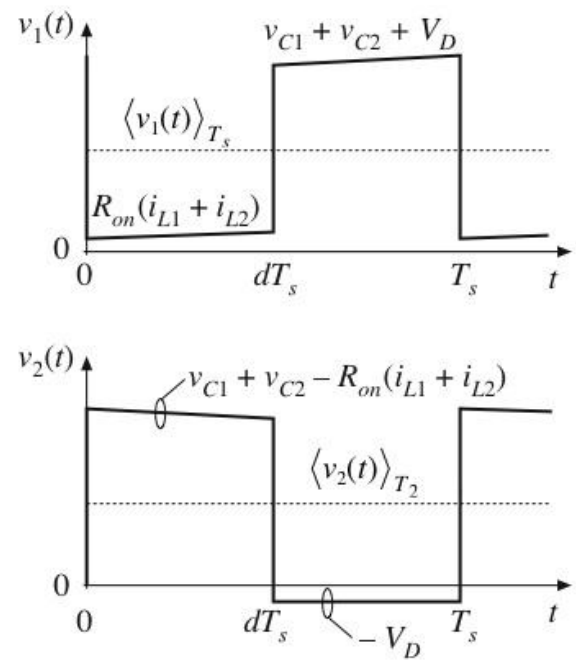

Averaged terminal voltages of switch network, including conduction losses:

$$\langle v_1(t) \rangle_{T_s} = d(t) R_{on} \left(\langle i_{L1}(t) \rangle_{T_s} + \langle i_{L2}(t) \rangle_{T_s} \right) + d'(t) \left(\langle v_{C1}(t) \rangle_{T_s} + \langle v_{C2}(t) \rangle_{T_s} + V_D \right)$$

$$\langle v_2(t) \rangle_{T_s} = d(t) \left(\langle v_{C1}(t) \rangle_{T_s} + \langle v_{C2}(t) \rangle_{T_s} - R_{on} \left(\langle i_{L1}(t) \rangle_{T_s} + \langle i_{L2}(t) \rangle_{T_s} \right) \right) + d'(t) \left(-V_D \right)$$

Averaging the terminal currents

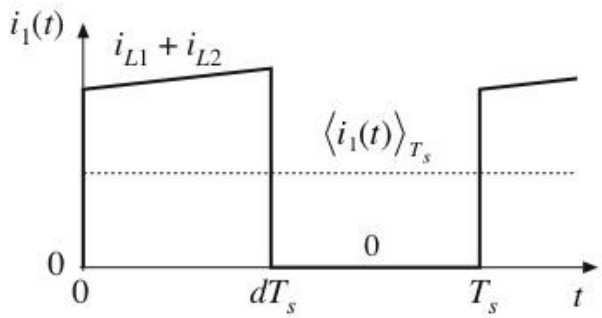

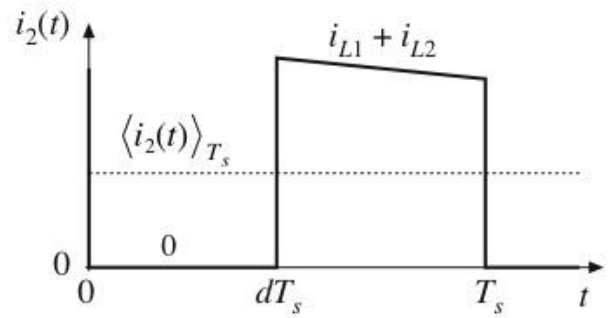

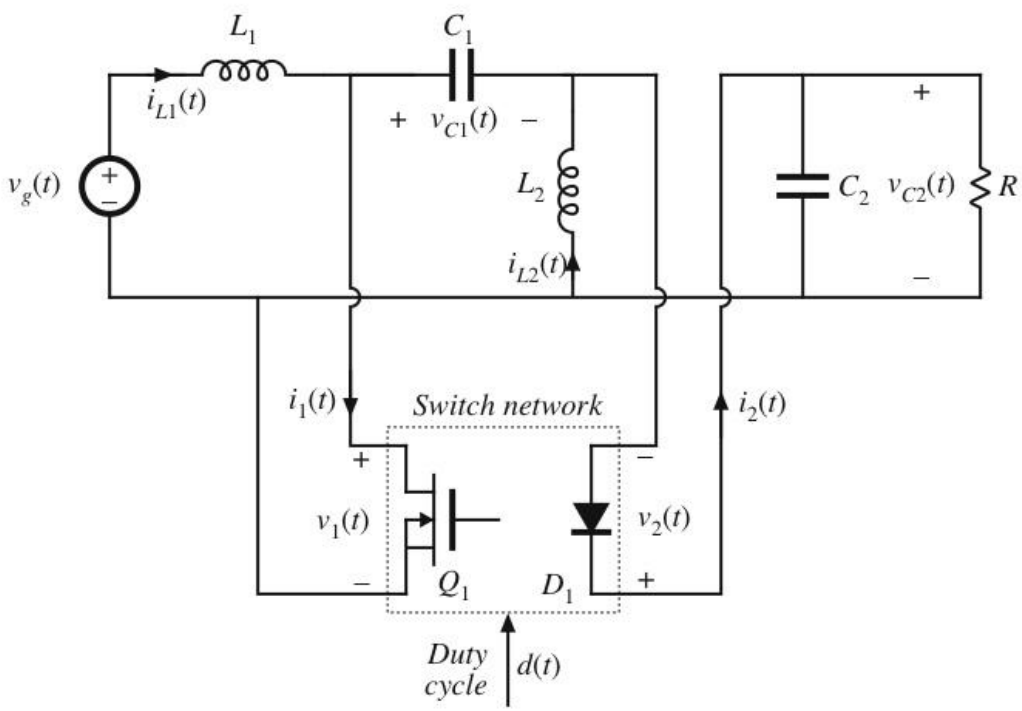

$$\langle i_1(t) \rangle_{T_s} = d(t) \left(\langle i_{L1}(t) \rangle_{T_s} + \langle i_{L2}(t) \rangle_{T_s} \right)$$

$$\langle i_2(t) \rangle_{T_s} = d'(t) \left(\langle i_{L1}(t) \rangle_{T_s} + \langle i_{L2}(t) \rangle_{T_s} \right)$$

$$\langle i_2(t) \rangle_{T_s} = \frac{d'(t)}{d(t)} \langle i_1(t) \rangle_{T_s}$$

Elimination of intermediate variables

From previous slides:

$$\langle v_1(t)\rangle_{T_s} = d(t)R_{on}\left(\langle i_{L1}(t)\rangle_{T_s} + \langle i_{L2}(t)\rangle_{T_s}\right) + d'(t)\left(\langle v_{C1}(t)\rangle_{T_s} + \langle v_{C2}(t)\rangle_{T_s} + V_D\right)$$

$$\langle v_2(t)\rangle_{T_s} = d(t)\left(\langle v_{C1}(t)\rangle_{T_s} + \langle v_{C2}(t)\rangle_{T_s} - R_{on}\left(\langle i_{L1}(t)\rangle_{T_s} + \langle i_{L2}(t)\rangle_{T_s}\right)\right) + d'(t)\left(-V_D\right)$$

$$\langle i_{L1}(t)\rangle_{T_s} + \langle i_{L2}(t)\rangle_{T_s} = \frac{\langle i_1(t)\rangle_{T_s}}{d(t)}$$

Eliminate inductor currents and capacitor voltages, which are external to switch network:

$$\langle v_1(t)\rangle_{T_s} = \frac{R_{on}}{d(t)}\langle i_1(t)\rangle_{T_s} + \frac{d'(t)}{d(t)}\left(\langle v_2(t)\rangle_{T_s} + V_D\right)$$

Construct equivalent circuit:

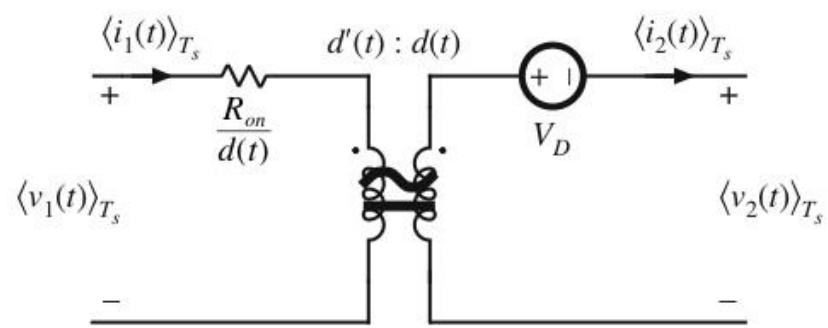

Spice library model CCM2

(a)

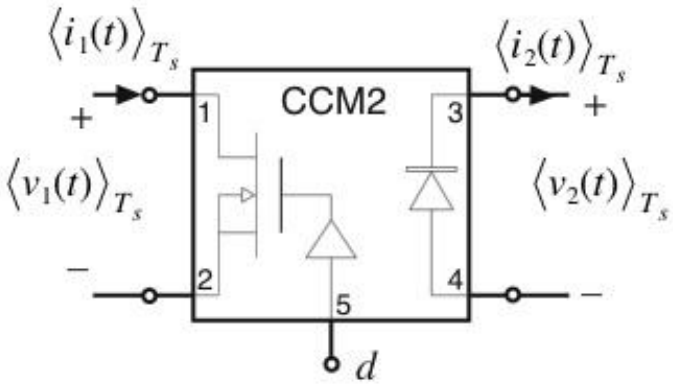

Fig. B.3 Subcircuit implementation of the CCM averaged switch model that includes conduction losses: (a) circuit symbol; (b) PSpice netlist for the subcircuit.

(b)

```
*************************************************************
* MODEL: CCM2
* Application: two-switch PWM converters, includes
*              conduction losses due to Ron, VD, RD
* Limitations: CCM only, no transformer
*************************************************************
* Parameters:
*     Ron = transistor on-resistance
*     VD = diode forward voltage drop
*     RD = diode on-resistance
*************************************************************
* Nodes:
* 1: transistor positive (drain for an n-channel MOS)
* 2: transistor negative (source for an n-channel MOS)
* 3: diode cathode
* 4: diode anode
* 5: duty cycle control input
*************************************************************
.subckt CCM2 1  2  3  4  5
+params: Ron=0 VD=0 RD=0
Er 1 1x value={i(Et)*(Ron+(1-v(5))*RD/v(5))/v(5)}
Et 1x 2 value={(1-v(5))*(v(3,4)+VD)/v(5)}
Gd 4 3 value={(1-v(5))*i(Et)/v(5)}
.ends
*************************************************************
```

Insert model into SEPIC

Simulation of conversion ratio and efficiency

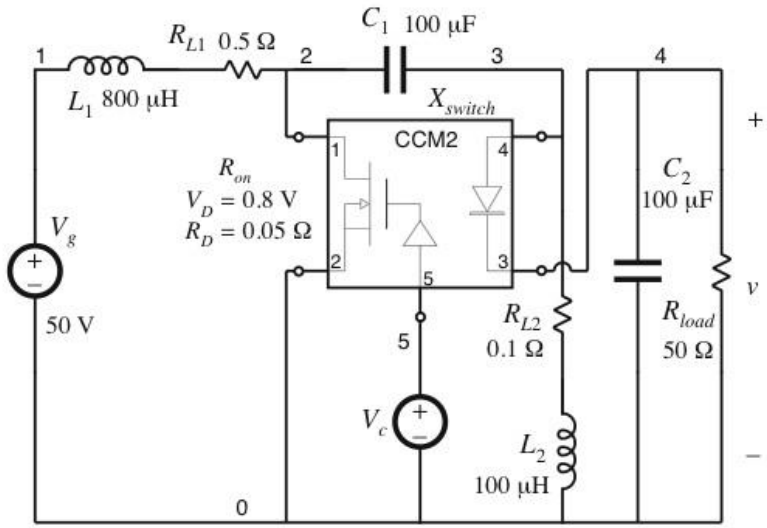

SEPIC DC conversion ratio and efficiency

```
* Define parameters:
.param  Ron=0.0 VD=0.8 RD=0.05
* Analysis setup:
.dc lin Vc 0.1 1 0.01
.step lin PARAM Ron 0 1 0.5

* Converter netlist:
Vg 1 0 50V
L1 1 2x  800u
RL1 2x 2 0.5
L2 0 3x 100uH
RL2 3x 3 0.1
C1 2 3 100uF
C2 4 0 100uF
Xswitch 2 0 4 3 5 CCM2
+params: Ron={Ron} VD={VD} RD={RD}
Rload 4 0 50

* Duty cycle input:
Vc  5 0 0.5

.lib switch.lib
.probe
.end
```

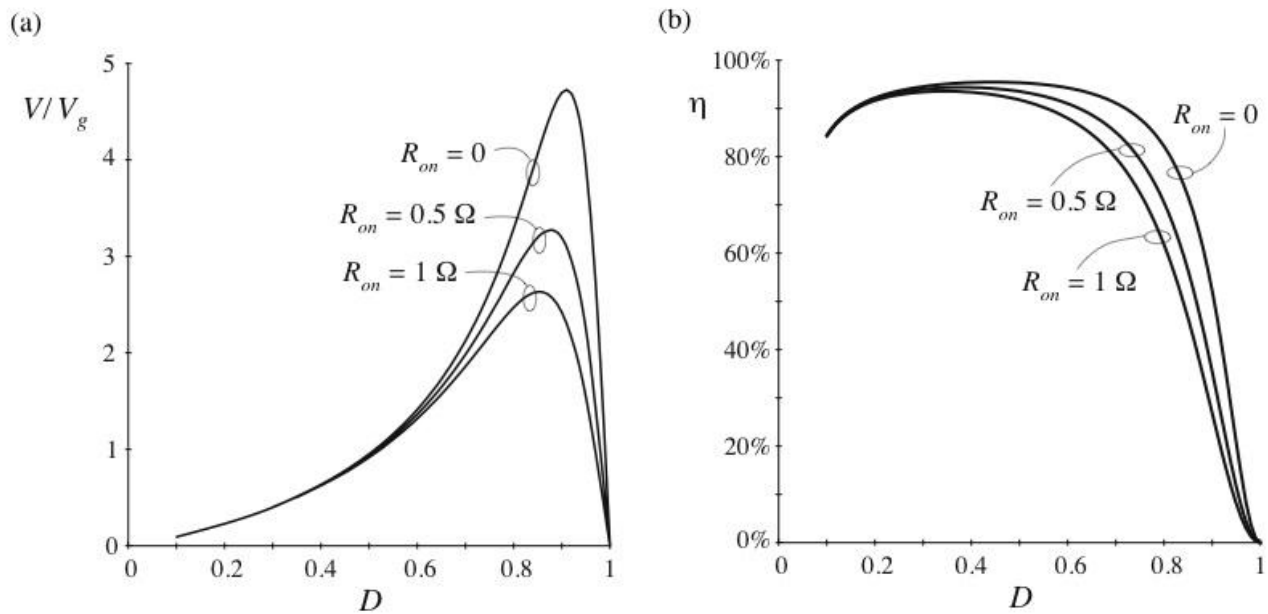

Simulation model
Buck-boost with conduction loss

Buck-boost converter

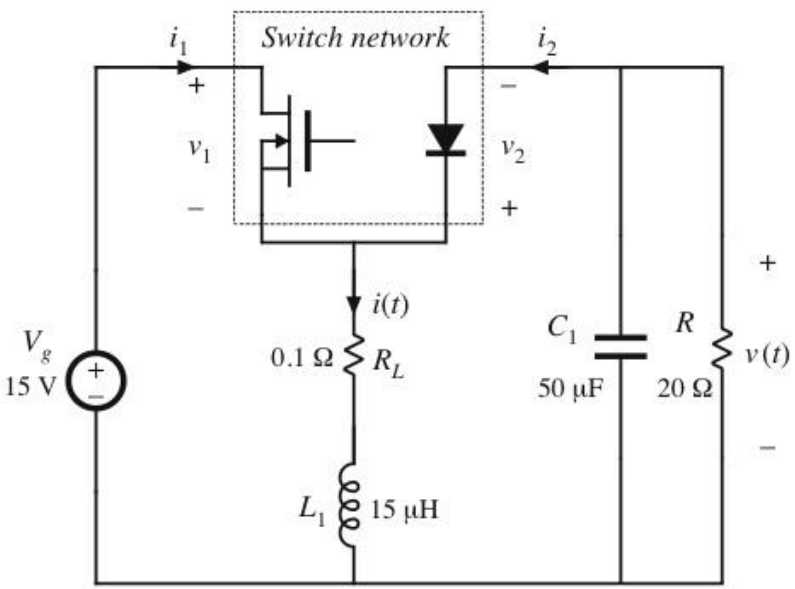

Averaged switch model

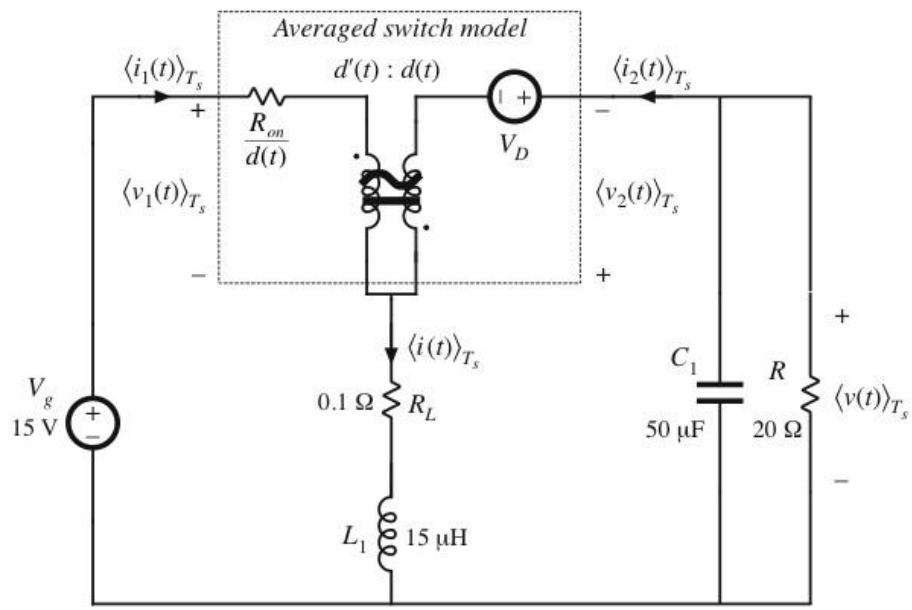

Transient analysis example

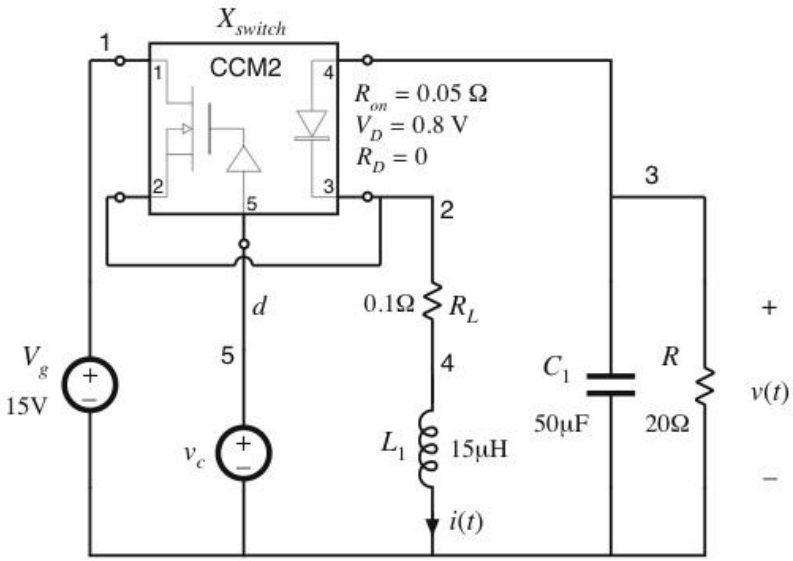

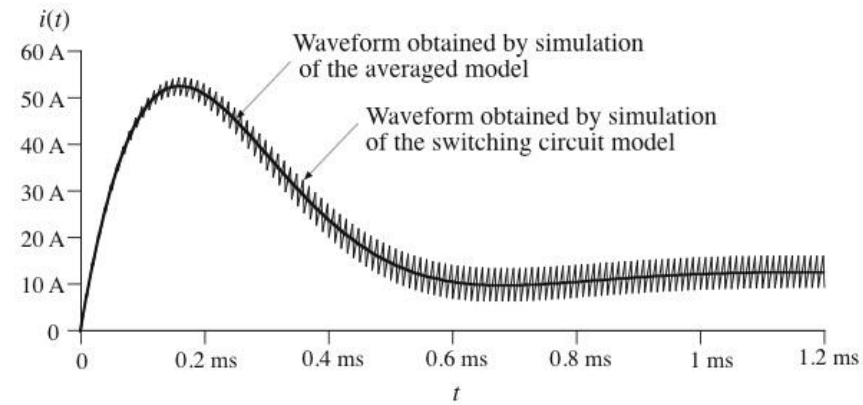

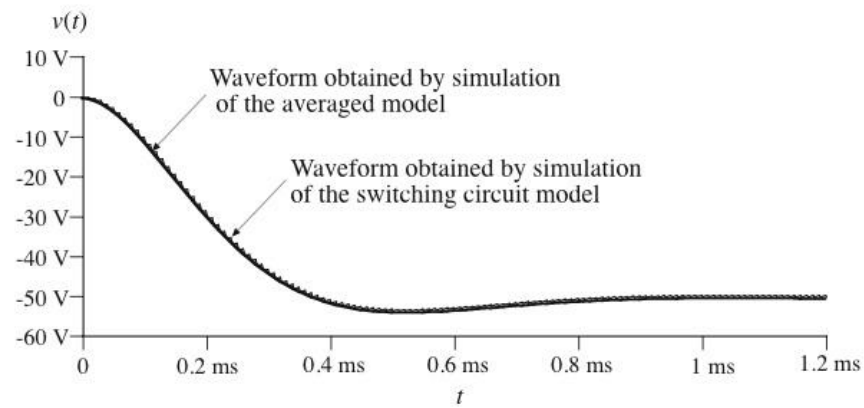


```
Buck-boost converter, averaged circuit

.lib switch.lib

Vg 1 0 15V
Xswitch 1 2 2 3 5 CCM2
+ PARAMS: Ron=0.05 VD=0.8 RD=0
RL 2 4 0.1
L1 4 0 15uH ic=0
C1 3 0 50uF ic=0
R 3 0 20
Vc 5 0 0.8
.tran 10u 1.2m 0m 10u uic

.probe
.end
```