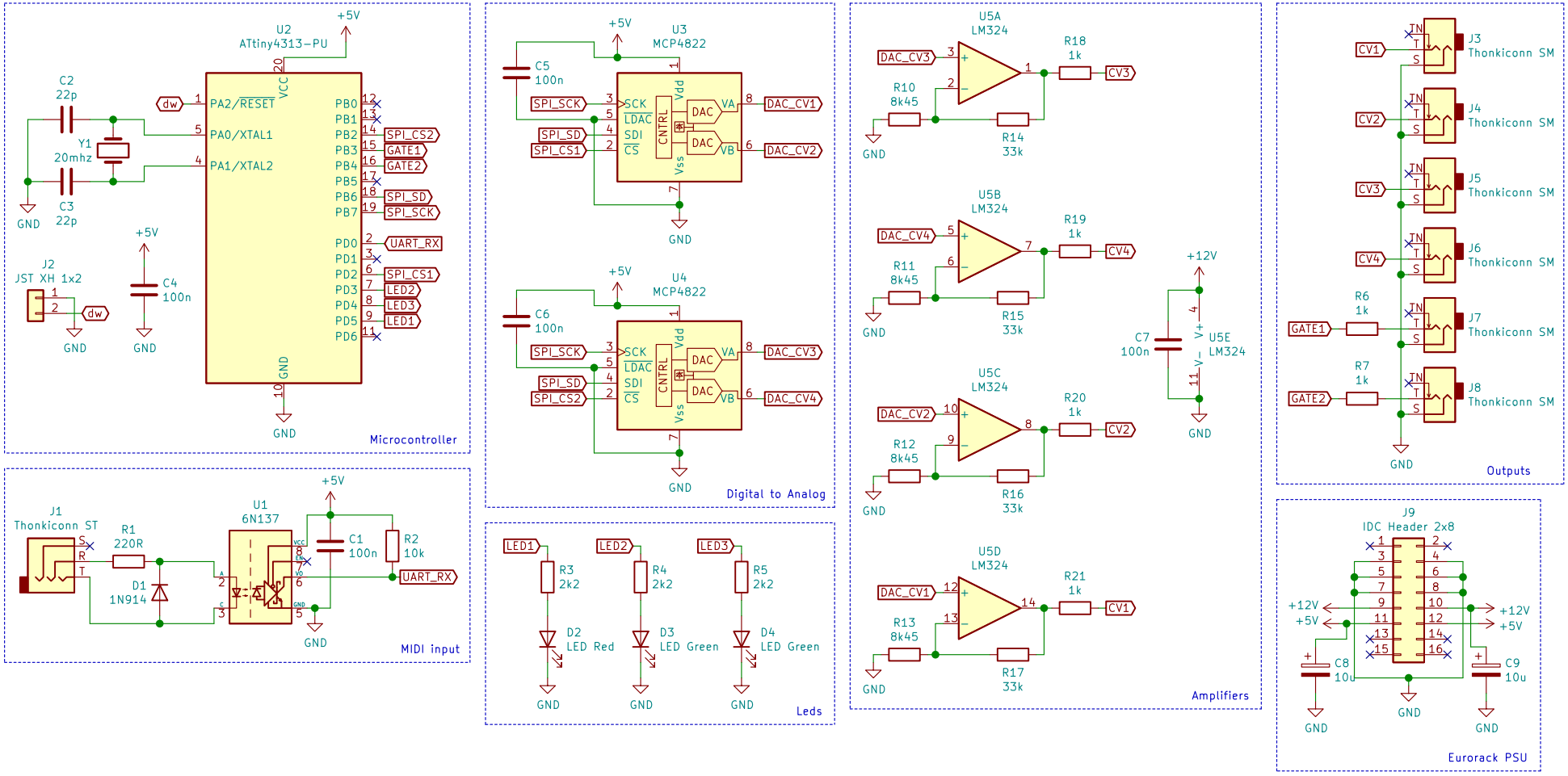

Designed by: Rafael G. Martins
Released under CERN Open Hardware Licence Version 2 – Strongly Reciprocal

Sheet: /
File: midi-to-cv.sch

Title: midi-to-cv

Size: A4	Date: 2021-12-15	**Rev: 1.0**
KiCad E.D.A. kicad 5.99.0+really5.1.12+dfsg1-1		Id: 1/1