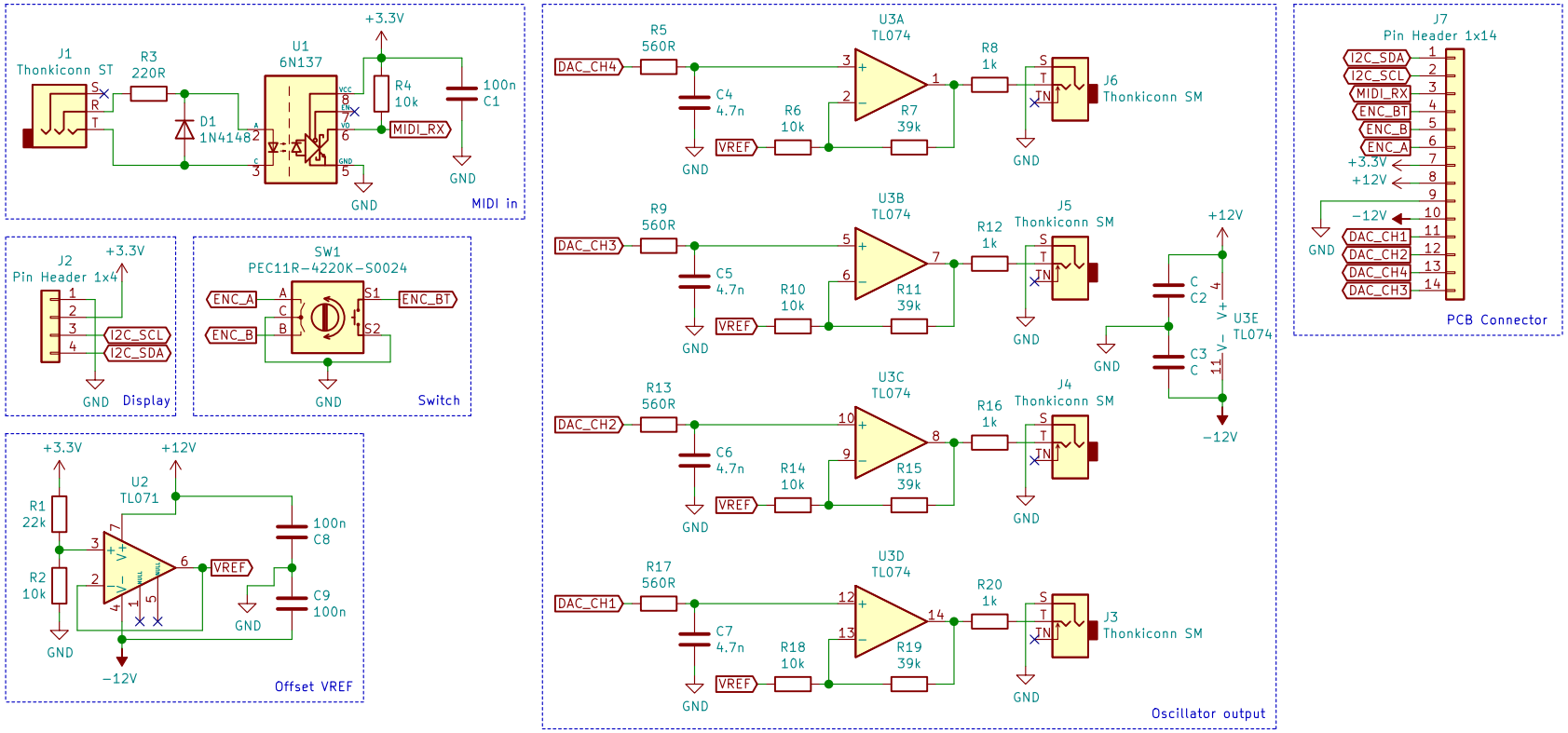

Sheet: /
File: midi-oscillator_front.sch

Title: *midi-controller front*

Size: A4	Date: 2021-12-15	**Rev: 1.0**
KiCad E.D.A. kicad 5.99.0+really5.1.12+dfsg1-1		Id: 1/1