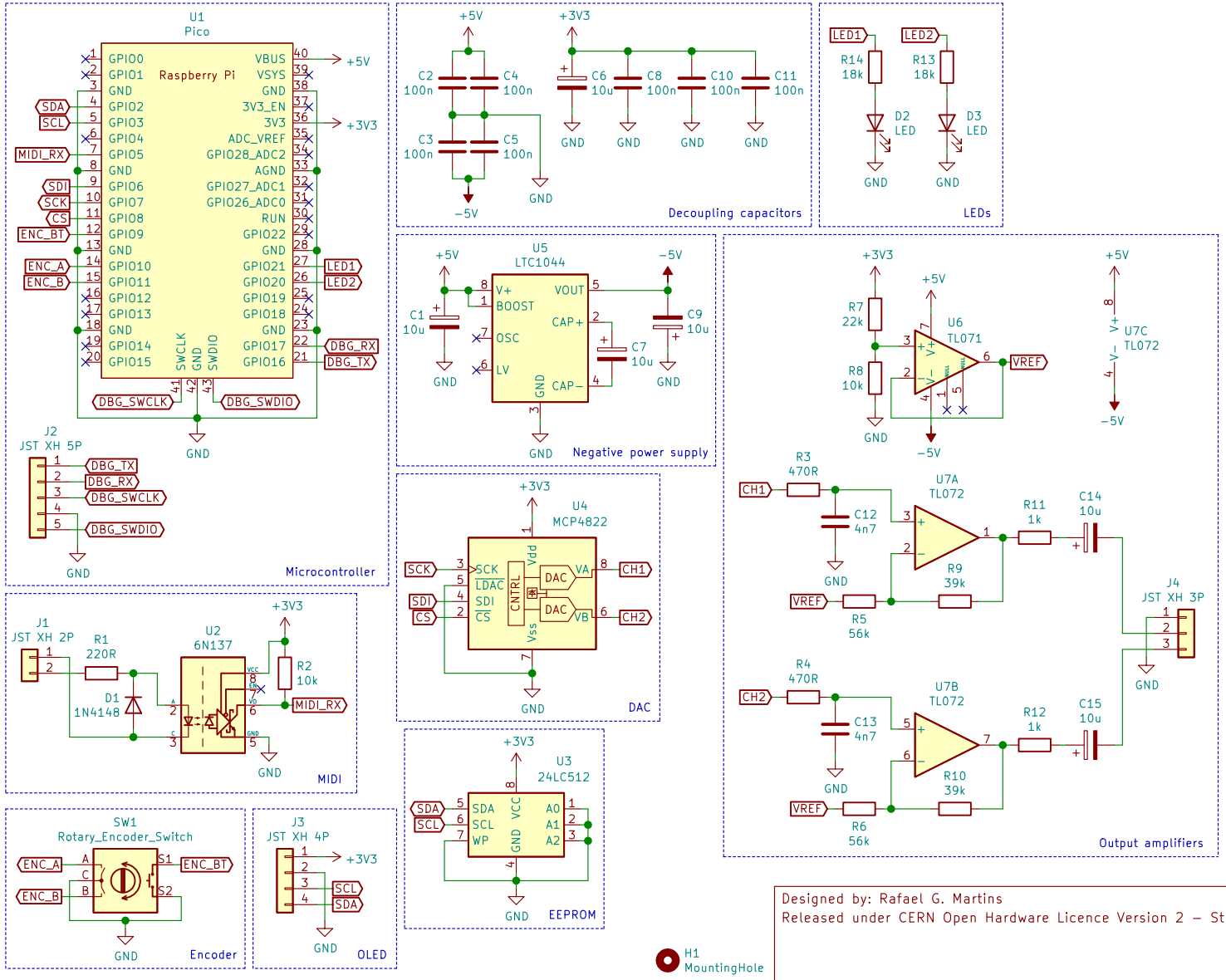

Designed by: Rafael G. Martins

Released under CERN Open Hardware Licence Version 2 – Strongly Reciprocal

Sheet: /
File: pico-synth.sch

Title: pico-synth

Size: A4	Date: 2022-02-01	**Rev: 2.1**
KiCad E.D.A. kicad 5.99.0+really5.1.12+dfsg1-1		Id: 1/1