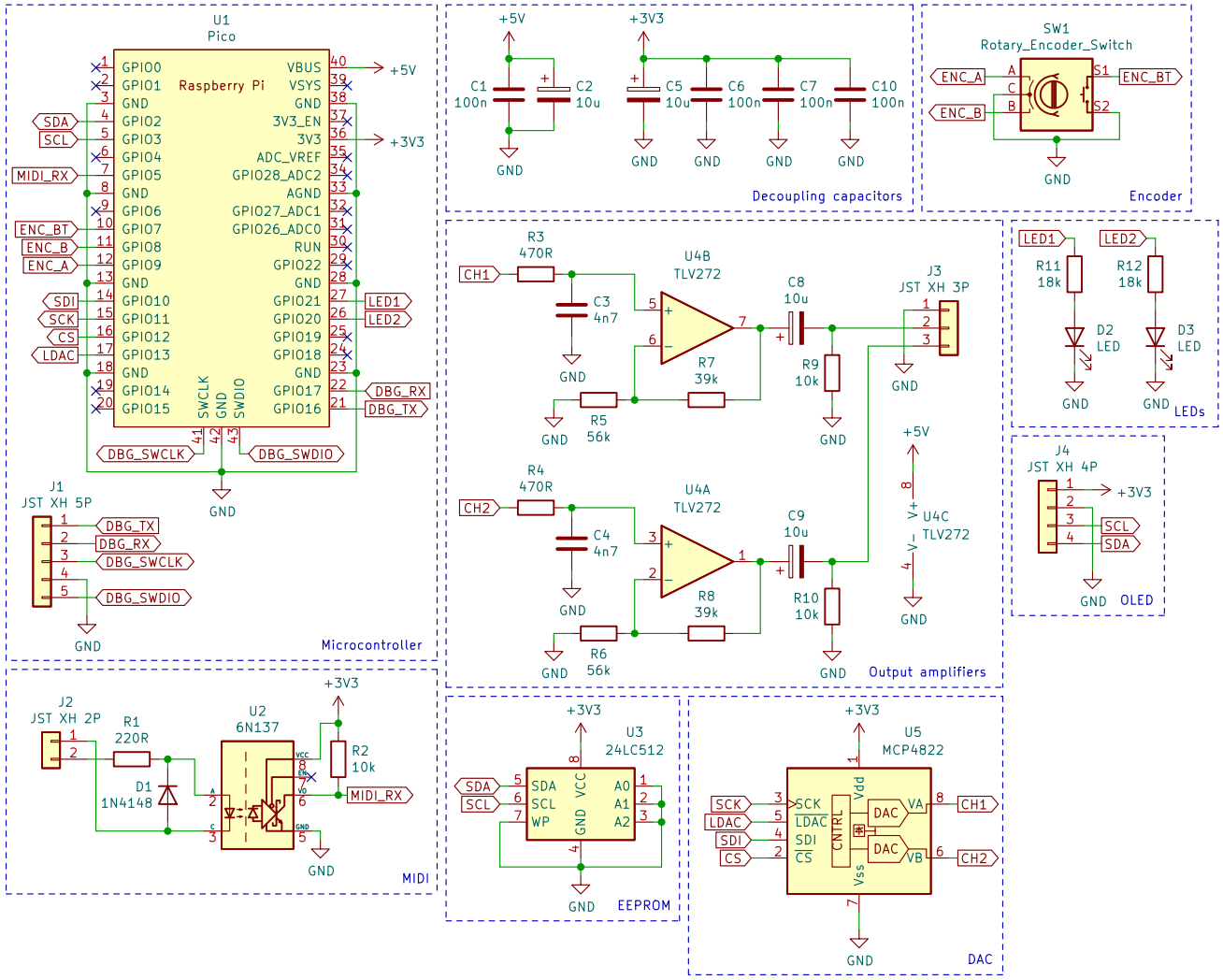

H1 MountingHole
H2 MountingHole
H3 MountingHole
H4 MountingHole

Designed by: Rafael G. Martins
Released under CERN Open Hardware Licence Version 2 – Strongly Reciprocal

Sheet: /
File: pico-synth.kicad_sch

Title: pico-synth

Size: A4	Date: 2022-04-08	**Rev: 2.2**
KiCad E.D.A. kicad 6.0.4+dfsg-1		Id: 1/1