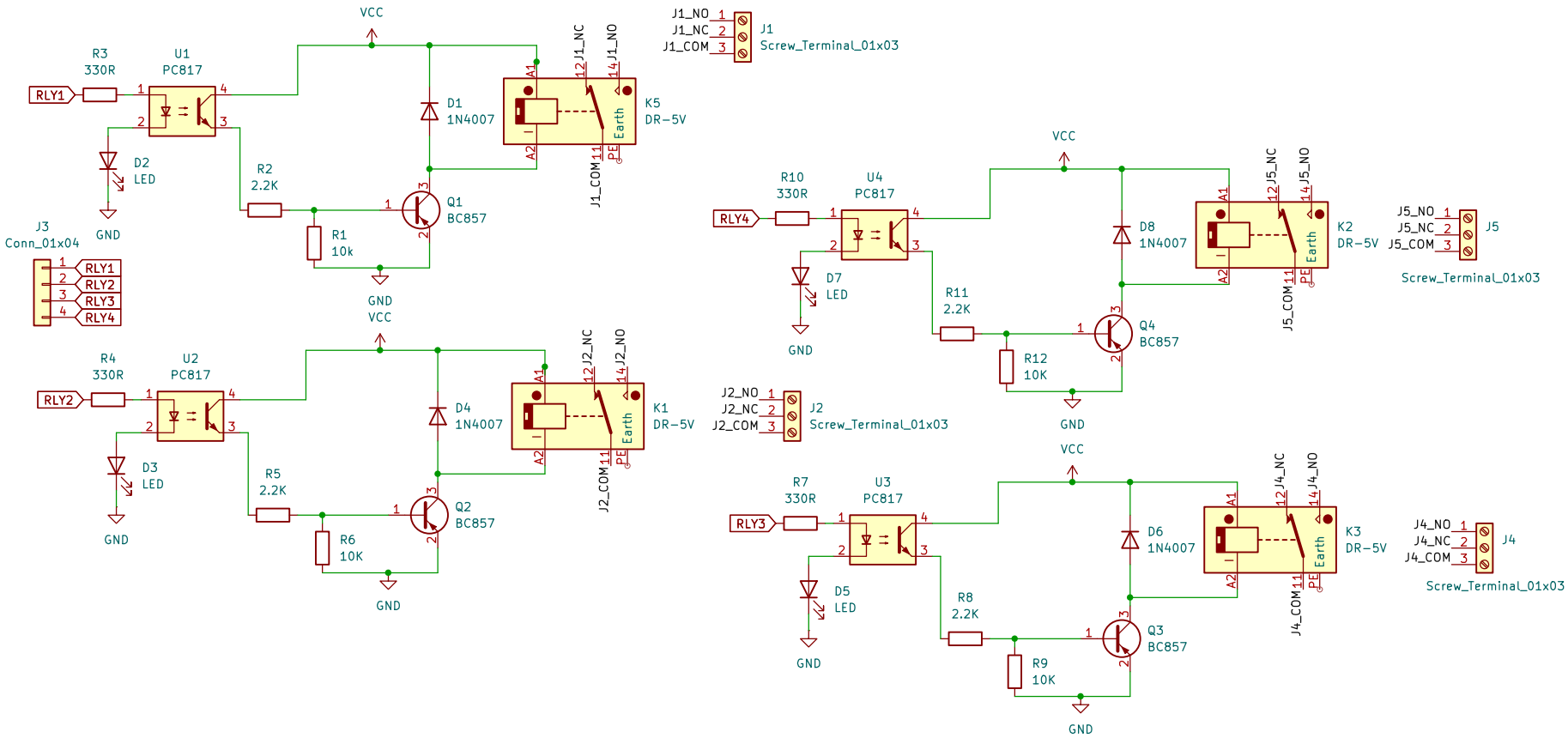

Aryaguna Abi Rafdi Yasa

Sheet: /
File: Relay5V.kicad_sch

Title: 5V relay 4 Chennel

Size: A4	Date: 10 - 7 - 2025	Rev:
KiCad E.D.A. 9.0.4		Id: 1/1