IRE 205: Microprocessor and Microcontroller System Design

Introduction to Microprocessor

Microprocessor

Microprocessor is the controlling unit or CPU of a micro-computer, fabricated on a very small chip capable of performing ALU operations and communicating with the external devices connected to it.

- The microprocessor is one of the most important components of a digital computer.
- It acts as the brain of the computer system.
- As technology has progressed, microprocessors have become faster, smaller and capable of doing more work per clock cycle.
- Sometimes, microprocessor is written as μP.

Computer Architecture

A computer has main three parts. They are – i) I/O devices, ii) Memory, iii) CPU (Central Processing Unit).

I/O devices are the intermediate media between the computer and the user. User can give input to the computer through the input device (e.g. keyboard, mouse etc). Computer shows the output of the operation which was asked by user, on the output devices (e.g. monitor, printer etc).

Memory is the place where computer stores its information and data. Memory is comprised nothing but registers. The memory, in other words registers are usually 4, 8, 16 bits long. That is, memory stores information and data of fixed length.

CPU (CENTRAL PROCESSING UNIT):

CPU is the brain of the computer. It executes the instructions which are either given by a user or a system program. In any case, each instruction that the CPU executes is a bit string (i.e. combination of 0's and 1'). The language of 0's and 1's is called the machine language.

A CPU (or microprocessor) communicates with the memory and I/O devices by using signals that travel along a set of wires or connections called **buses.** Buses connect the different components of the computer shown in the figure. Physically buses are simply a group of electrical paths (or wires) which are connected to memory, CPU and I/O devices.

There are three types of buses. They are – i) Data Bus, ii) Address Bus & iii) Control Bus.

Role of buses - if user wants to know (read) the content of a specific memory location, then microprocessor will place the address of that memory location on the **address bus**. A control signal is sent to the memory by microprocessor to perform read operation on the **control bus**. Finally, microprocessor read the memory location and sends the data to the output device via **data bus.**

Data bus is a bidirectional path i.e. information on the data bus can travel to and from microprocessor, memory and I/O devices. But address bus is unidirectional. Information travels only one direction i.e. from microprocessor to memory and microprocessor to I/O devices. The directions of buses are shown:

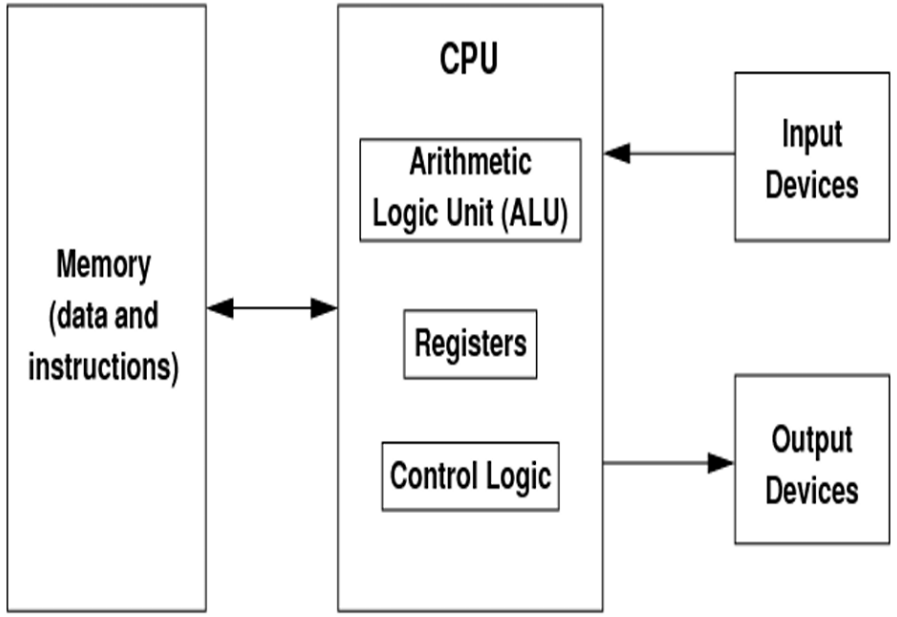

Fig: Main components of a computer

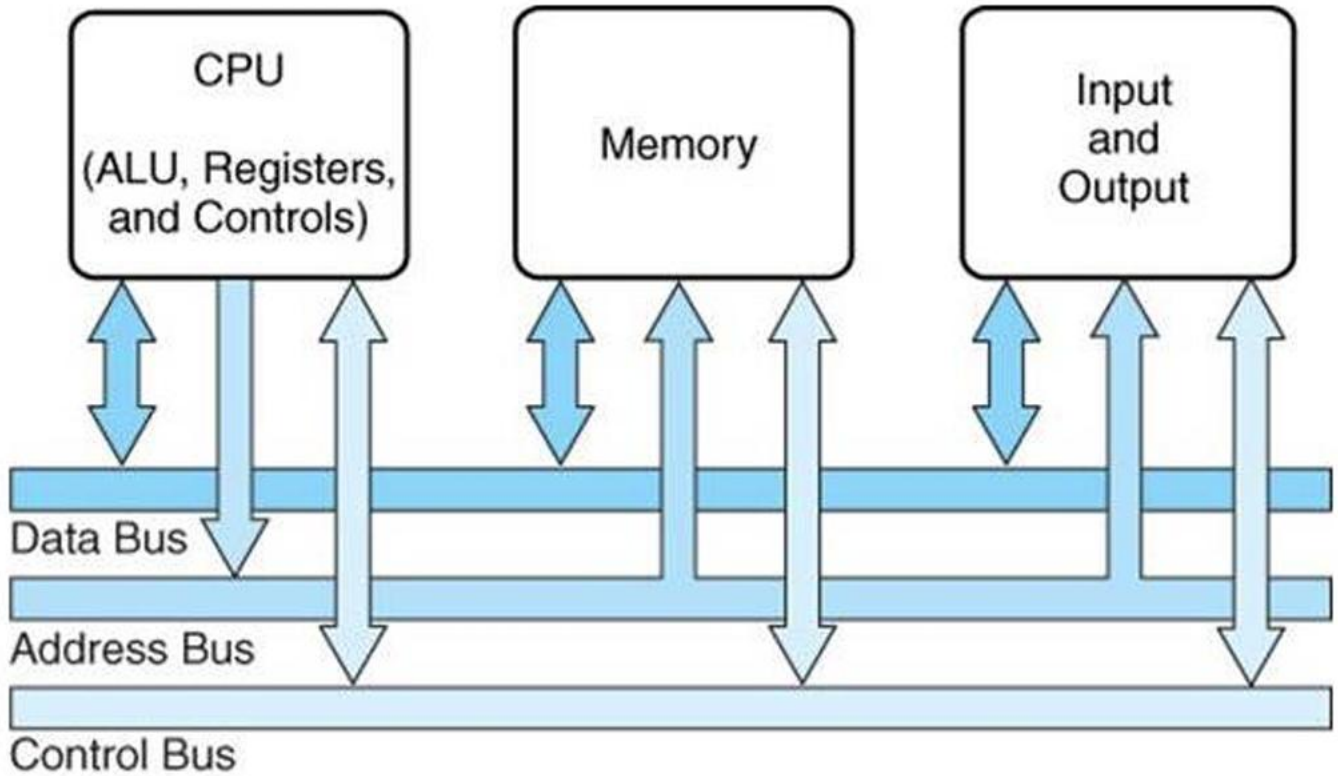
CPU
(ALU, Registers, and Controls)
Memory
Input and Output
Data Bus
Address Bus
Control Bus

MEMORY:

Memory consists of registers. Computer has two types of memory – i) RAM (random access memory), ii) ROM (read only memory).

The difference between them can be understood from their name. RAM locations can be both read and written whereas ROM location can be read only. This is because the contents of ROM, once initialized, cannot be changed. In addition to it, the contents of RAM are lost after power is cut i.e. it has temporary memory. So anything valuable in RAM must be saved on a disk or printed out. But the contents (data and instructions) of ROM are retained even after the power is off. The instructions responsible for stating-up program and self-testing the computer when it is turned on, are written in ROM by the manufacture company. These programs are known as **firmware**.

Significance of 1 MB memory – 1 MB = 1024×1024 B = 1048576 B. That is 1 MB memory has 1048576 locations where it can store information. Again, 2^{20} = 1048576 that is a 20 – bit number has different 1048576 values. From the above two points, we can say that 20 – bit address can be used to address 1 MB memory. 8086 microprocessor uses 20 – bit for address.

Number System

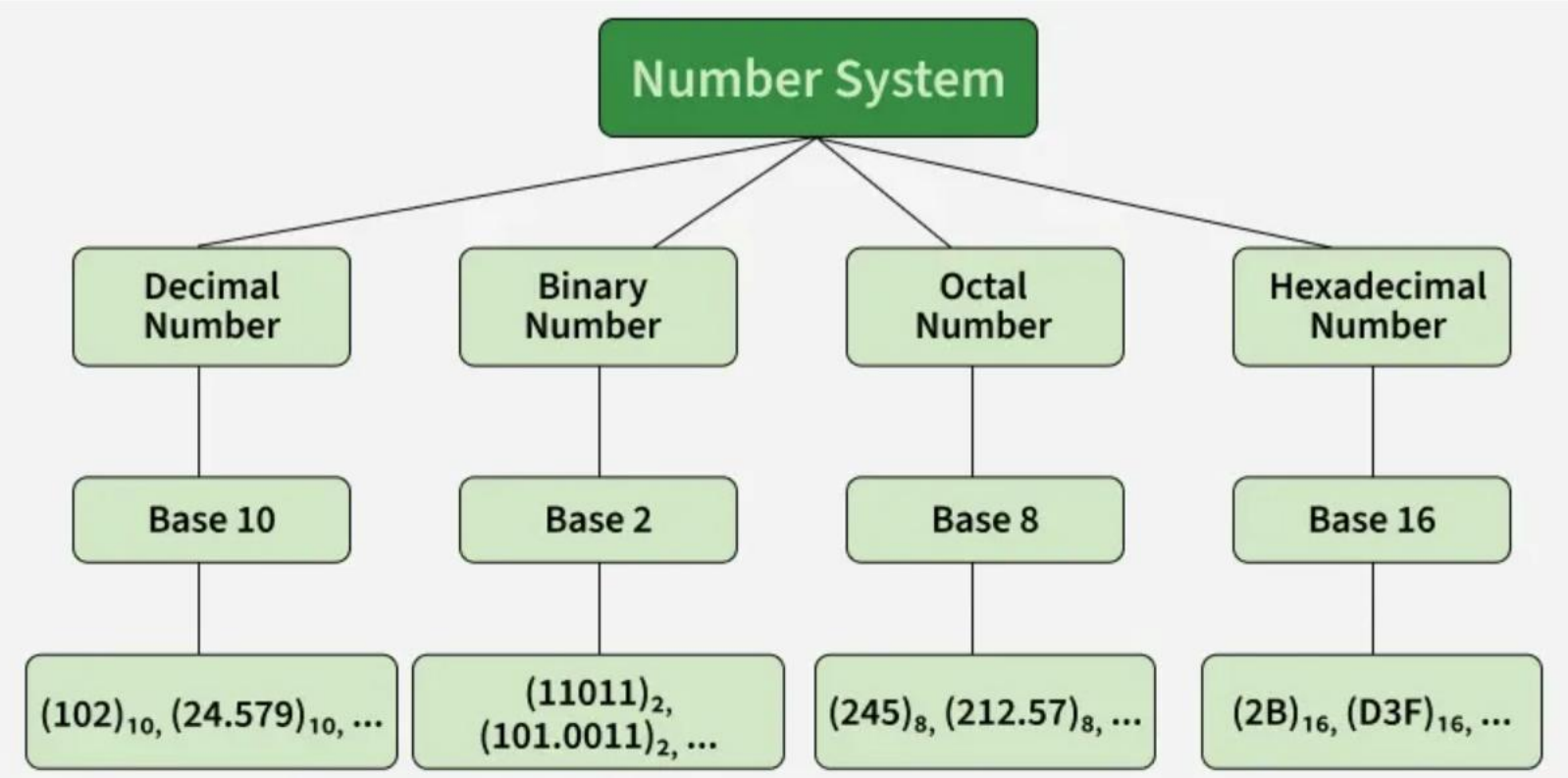

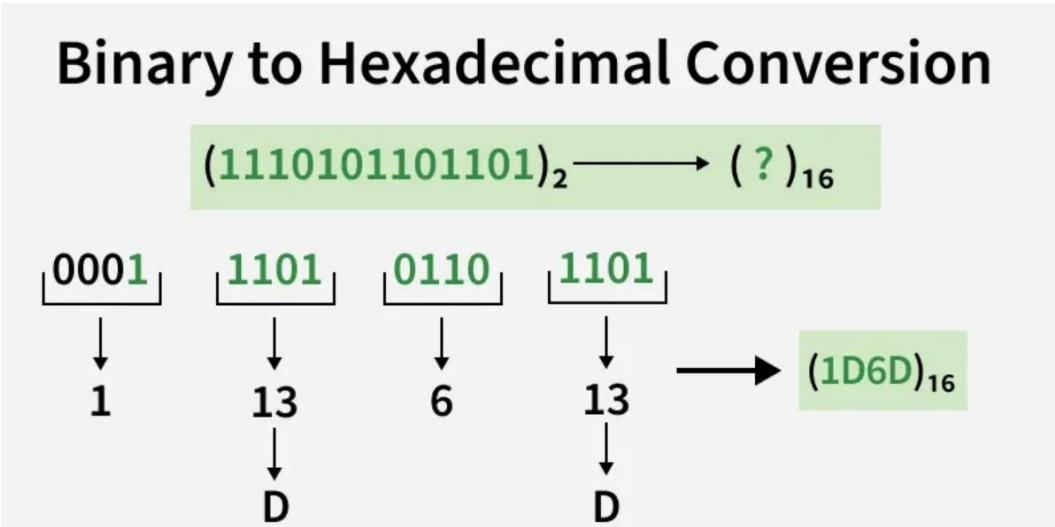
Binary to Hexadecimal Conversion
$(1110101101101)_2 \longrightarrow (\ ?\ )_{16}$
0001
1101
0110
1101
1
13
6
13
D
D
$(1D6D)_{16}$

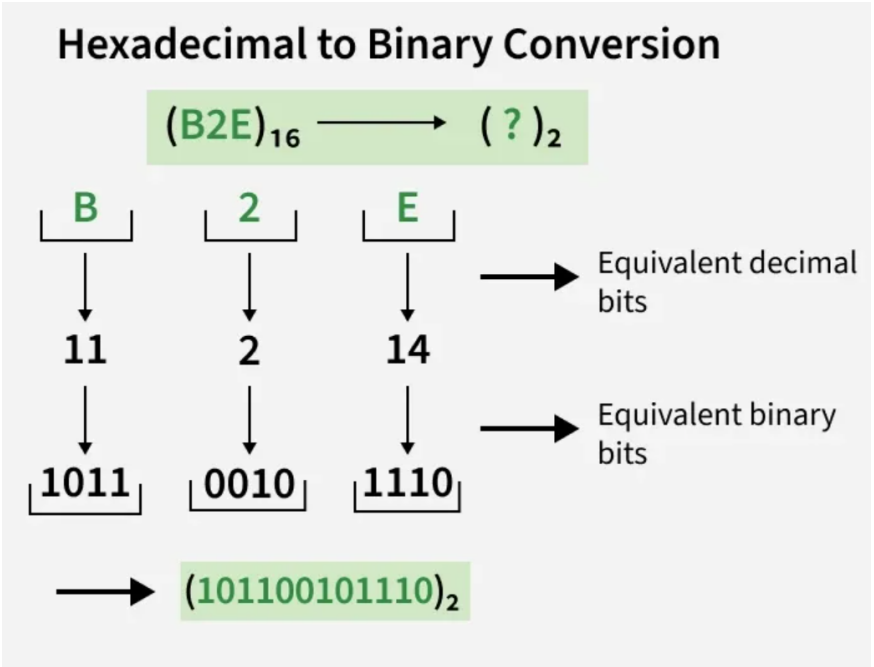
Hexadecimal to Binary Conversion
$(B2E)_{16} \longrightarrow (\ ?\ )_2$
B
2
E
11
2
14
1011
0010
1110
Equivalent decimal bits
Equivalent binary bits
$(101100101110)_2$

Historical Background of Intel Microprocessors

- **Intel 4004**

Year of introduction 1971

4-bit microprocessor

4 KB main memory

45 instructions

PMOS technology was first programmable device which was used in calculators

- **Intel 8008**

Year of introduction 1972

8-bit version of 4004

16 KB main memory

48 instructions

PMOS technology

Slow

Intel 8080

Year of introduction 1973

- 8-bit microprocessor
- 64 KB main memory
- 2 microseconds clock cycle time
- 500,000 instructions/sec
- 10X faster than 8008
- NMOS technology
- Drawback was that it needed three power supplies.
- Small computers (Microcomputers) were designed in mid 1970's using 8080 as CPU.

Intel 8085

- Year of introduction 1975
- 8-bit microprocessor-upgraded version of 8080
- 64 KB main memory
- 1.3 microseconds clock cycle time
- 246 instructions
- Intel sold 100 million copies of this 8-bit microprocessor
- uses only one +5v power supply.

Intel 8086/8088

- Year of introduction 1978 for 8086 and 1979 for 8088
- 16-bit microprocessors
- Data bus width of 8086 is 16 bit and 8 bit for 8088
- 1 MB main memory
- 400 nanoseconds clock cycle time
- 6 byte instruction cache for 8086 and 4 byte for 8088
- Other improvements included more registers and additional instructions

Thank You!