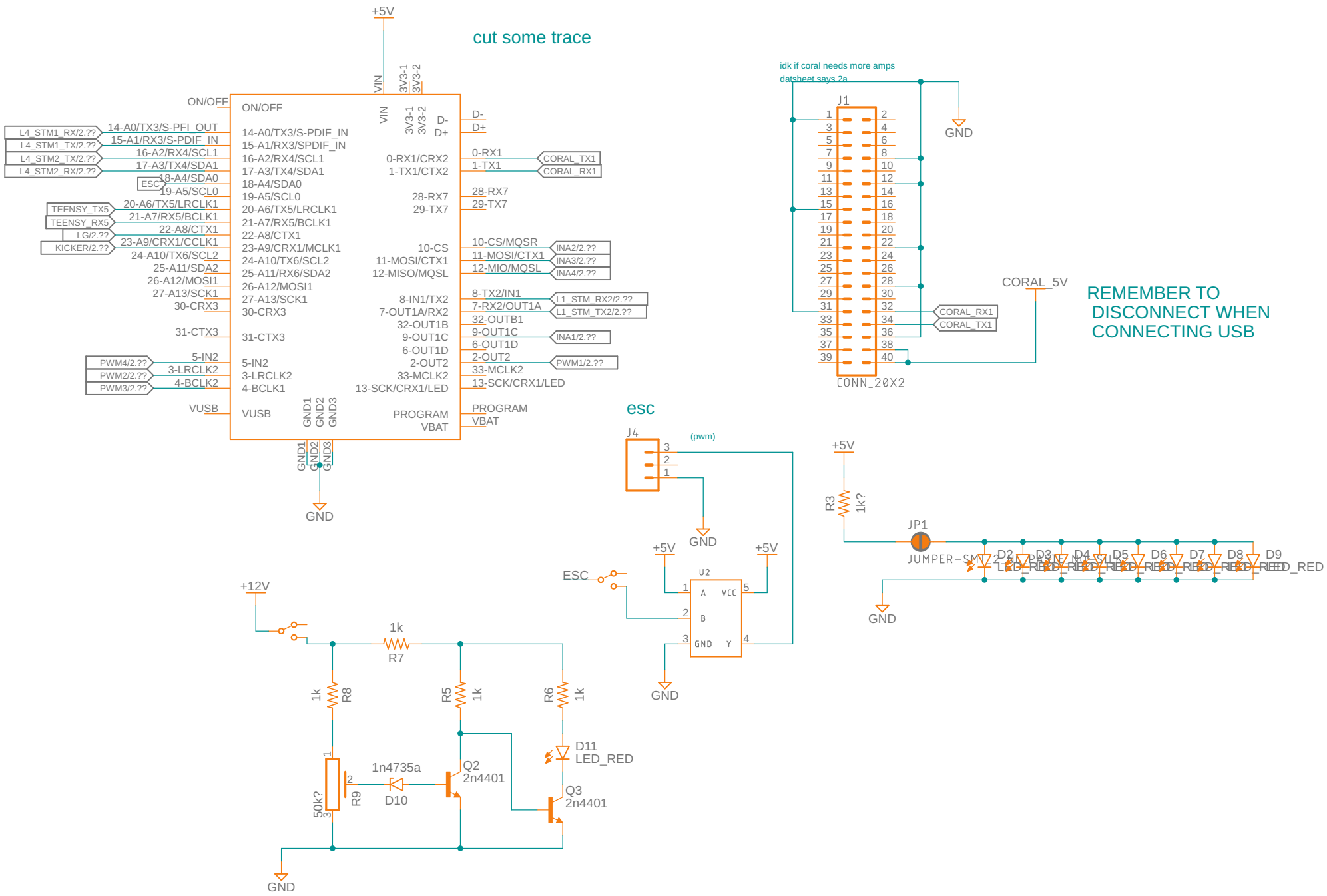
+5V
cut some trace
ON/OFF
VIN
3V3-1
3V3-2
D-
D+
14-A0/TX3/S-PDIF_IN
15-A1/RX3/SPDIF_IN
16-A2/RX4/SCL1
17-A3/TX4/SDA1
18-A4/SDA0
19-A5/SCL0
20-A6/TX5/LRCLK1
21-A7/RX5/BCLK1
22-A8/CTX1
23-A9/CRX1/MCLK1
24-A10/TX6/SCL2
25-A11/RX6/SDA2
26-A12/MOSI1
27-A13/SCK1
30-CRX3
31-CTX3
5-IN2
3-LRCLK2
4-BCLK1
VUSB
GND1
GND2
GND3
PROGRAM
VBAT
0-RX1/CRX2
1-TX1/CTX2
28-RX7
29-TX7
10-CS
11-MOSI/CTX1
12-MISO/MQSL
8-IN1/TX2
7-OUT1A/RX2
32-OUTB1
9-OUT1C
6-OUT1D
2-OUT2
33-MCLK2
13-SCK/CRX1/LED
10-CS/MQSR
0-RX1
1-TX1
L4_STM1_RX/2.??
L4_STM1_TX/2.??
L4_STM2_TX/2.??
L4_STM2_RX/2.??
ESC
TEENSY_TX5
TEENSY_RX5
LG/2.??
KICKER/2.??
PWM4/2.??
PWM2/2.??
PWM3/2.??
CORAL_TX1
CORAL_RX1
INA2/2.??
INA3/2.??
INA4/2.??
L1_STM_RX2/2.??
L1_STM_TX2/2.??
INA1/2.??
PWM1/2.??
GND
idk if coral needs more amps
datsheet says 2a
J1
CONN_20X2
CORAL_5V
REMEMBER TO
DISCONNECT WHEN
CONNECT USB
esc
J4
(pwm)
U2
A
B
VCC
GND
Y
ESC
+12V
1k
R7
R8
R5
R6
R9
50k?
1n4735a
D10
Q2
2n4401
Q3
2n4401
D11
LED_RED
R3
1k?
JP1
JUMPER-SMV
D2
D3
D4
D5
D6
D7
D8
D9
LED_RED

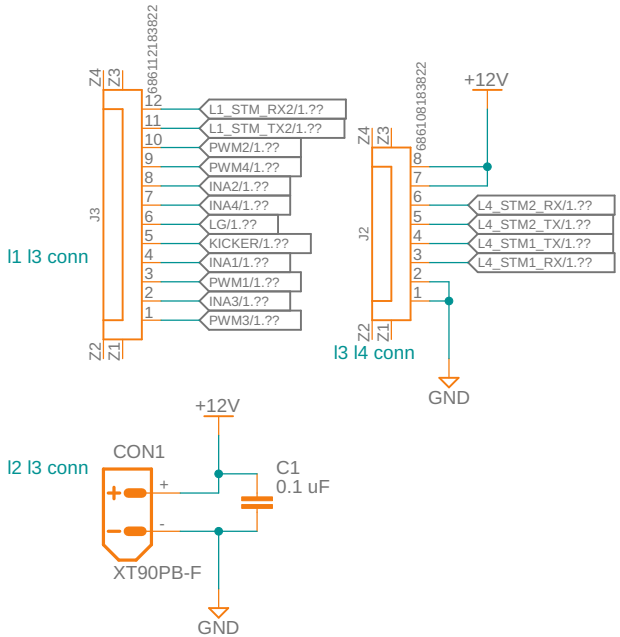
686112183822
Z4
Z3
J3
Z2
Z1
12
11
10
9
8
7
6
5
4
3
2
1
L1_STM_RX2/1.??
L1_STM_TX2/1.??
PWM2/1.??
PWM4/1.??
INA2/1.??
INA4/1.??
LG/1.??
KICKER/1.??
INA1/1.??
PWM1/1.??
INA3/1.??
PWM3/1.??
I1 I3 conn
686108183822
+12V
J2
L4_STM2_RX/1.??
L4_STM2_TX/1.??
L4_STM1_TX/1.??
L4_STM1_RX/1.??
I3 I4 conn
GND
+12V
CON1
I2 I3 conn
C1
0.1 uF
XT90PB-F
GND

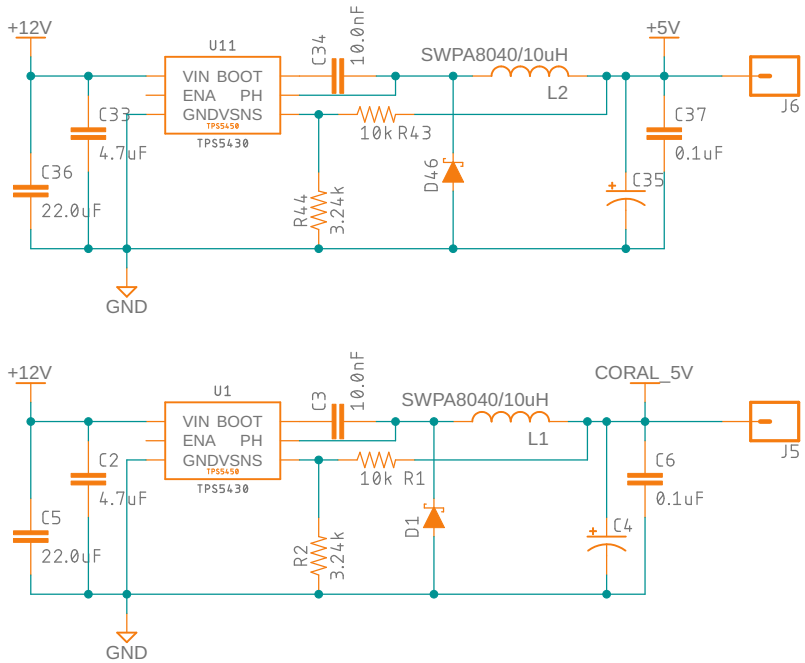
+12V
U11
VIN BOOT
ENA PH
GNDVSNS
TPS5450
TPS5430
C34
10.0nF
SWPA8040/10uH
L2
+5V
J6
C33
4.7uF
10k R43
C37
0.1uF
C36
22.0uF
D46
C35
R44
3.24k
GND
+12V
U1
VIN BOOT
ENA PH
GNDVSNS
TPS5450
TPS5430
C3
10.0nF
SWPA8040/10uH
L1
CORAL_5V
J5
C2
4.7uF
10k R1
C6
0.1uF
C5
22.0uF
D1
C4
R2
3.24k
GND