University of Jeddah

UberMed

CCCN 321: Embedded Systems

College of Computer Science and Engineering

Computer and Network Engineering Department

Submitted by

Ghadi Alshehri 2112956

Raghad Alghamdi 2111376

Raheed Karah 2110296

Rawnaa Aljohani 2110160

17 December 2023

Contents

I Introduction **2**

II Methodology **3**

III Results **21**

IV Conclusion **25**

V References **26**

I Introduction

Amidst the ongoing global challenge of the coronavirus, the "UberMed" project steps in as a solution to protect medical staff and doctors. With over 174.4 million cases and 3.8 million deaths reported as of June 2021, the project focuses on reducing the risk for healthcare workers when tending to isolated patients in general wards.

UberMed is essentially a Wi-Fi-controlled robot car, powered by an Arduino Uno microcontroller, its purpose is to safely deliver medications to patients without direct contact. Equipped with a spare smartphone and a live feed application, the robot ensures effective communication and monitoring.

The key feature of UberMed is a specially designed tray that allows for the secure delivery of medicines from a distance. This not only ensures timely medication for patients but also minimizes unnecessary contact, lowering the risk for medical personnel. In essence, UberMed blends technology with practicality to protect both healthcare providers and patients in the ongoing battle against the pandemic.[1]

II Methodology

1. The Software Part

The software part of the project includes multiple components that work together with the hardware components to create an efficient medical delivery system. These components include the development of a web page, an appropriately designed circuit, and the ESP32 code. Each of these components plays a vital role in ensuring a successful operating project.

1.1 The Web Page

A user-friendly web page was designed using the Visual Studio editor, incorporating HTML code to establish communication with an ESP32 using websockets. The page consists of a button representing a patient's room in a hospital and a text box to display messages from the ultrasonic sensor if an obstacle is detected. This interface enables admin with efficient control of the car remotely.

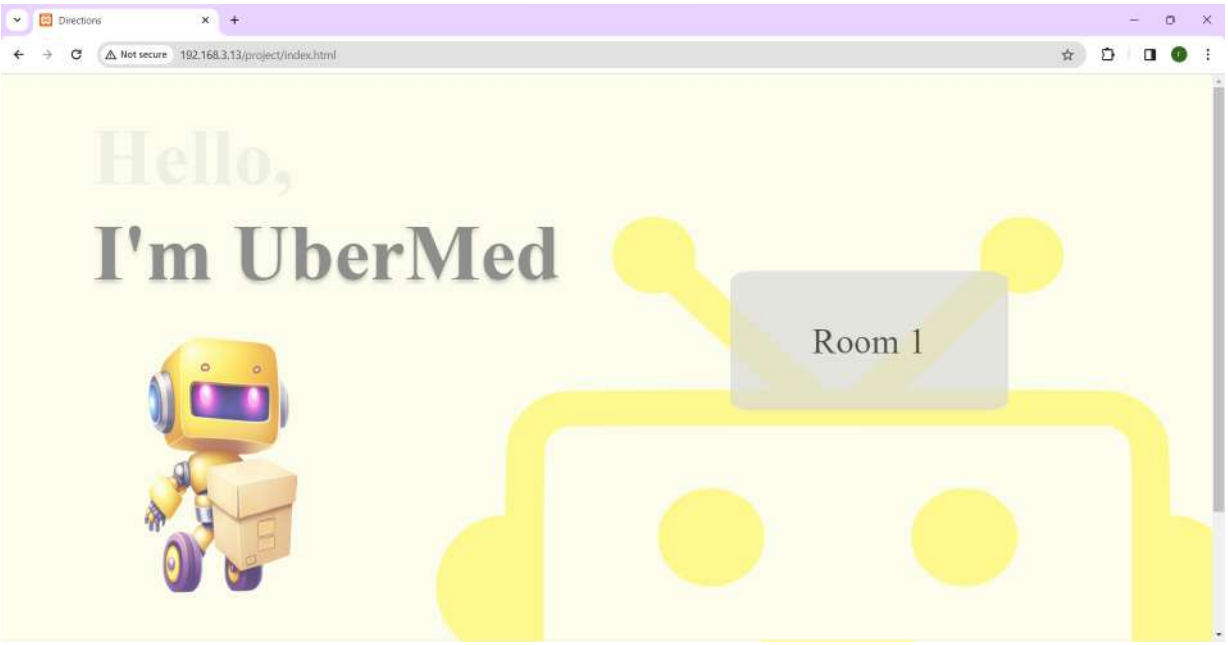

Fig. 1. Web Page

1.2 Block Diagram

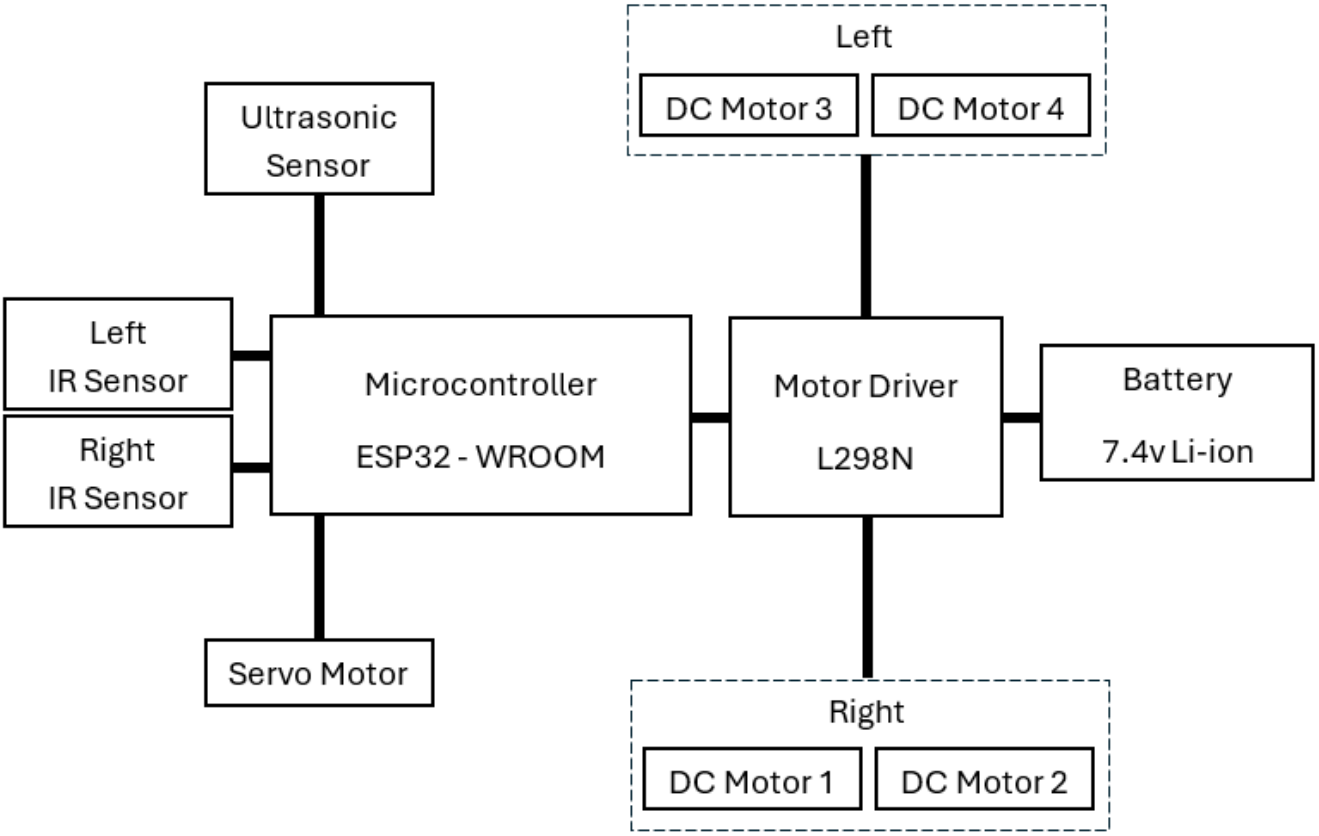

Fig. 2. Block Diagram

1.3 Software Circuit

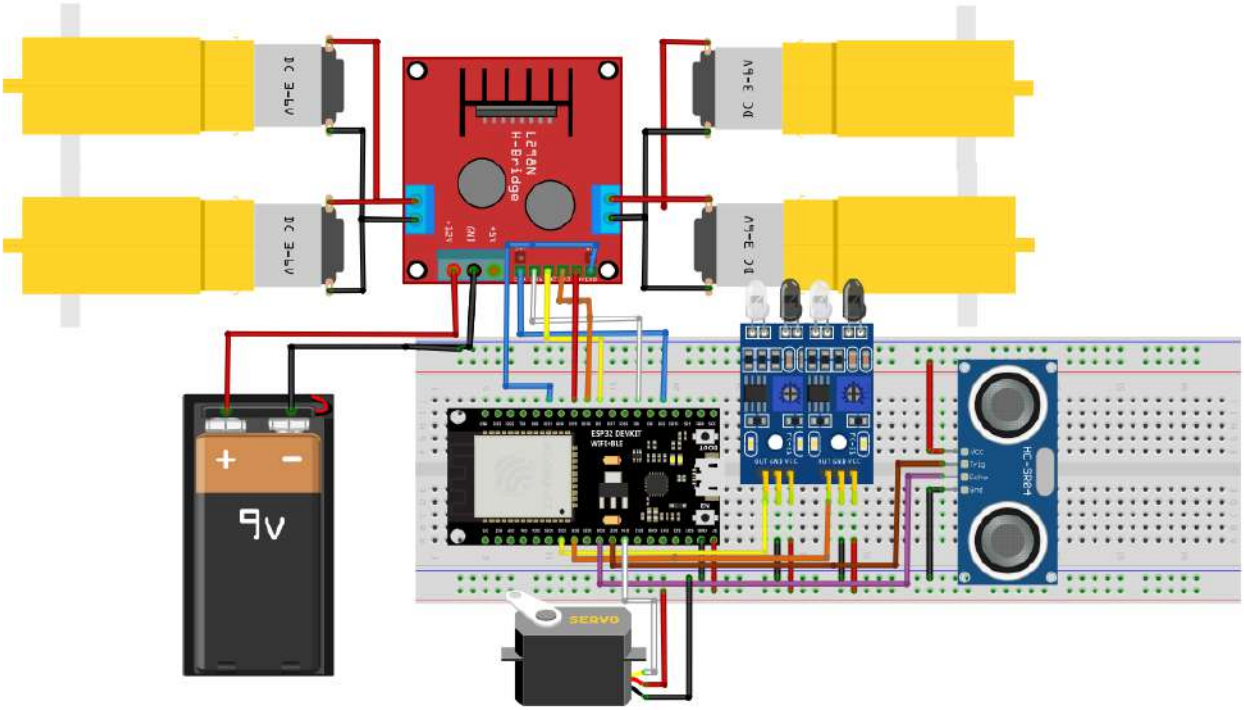

Fig. 3. Software Circuit

1.4 FlowChart Diagram

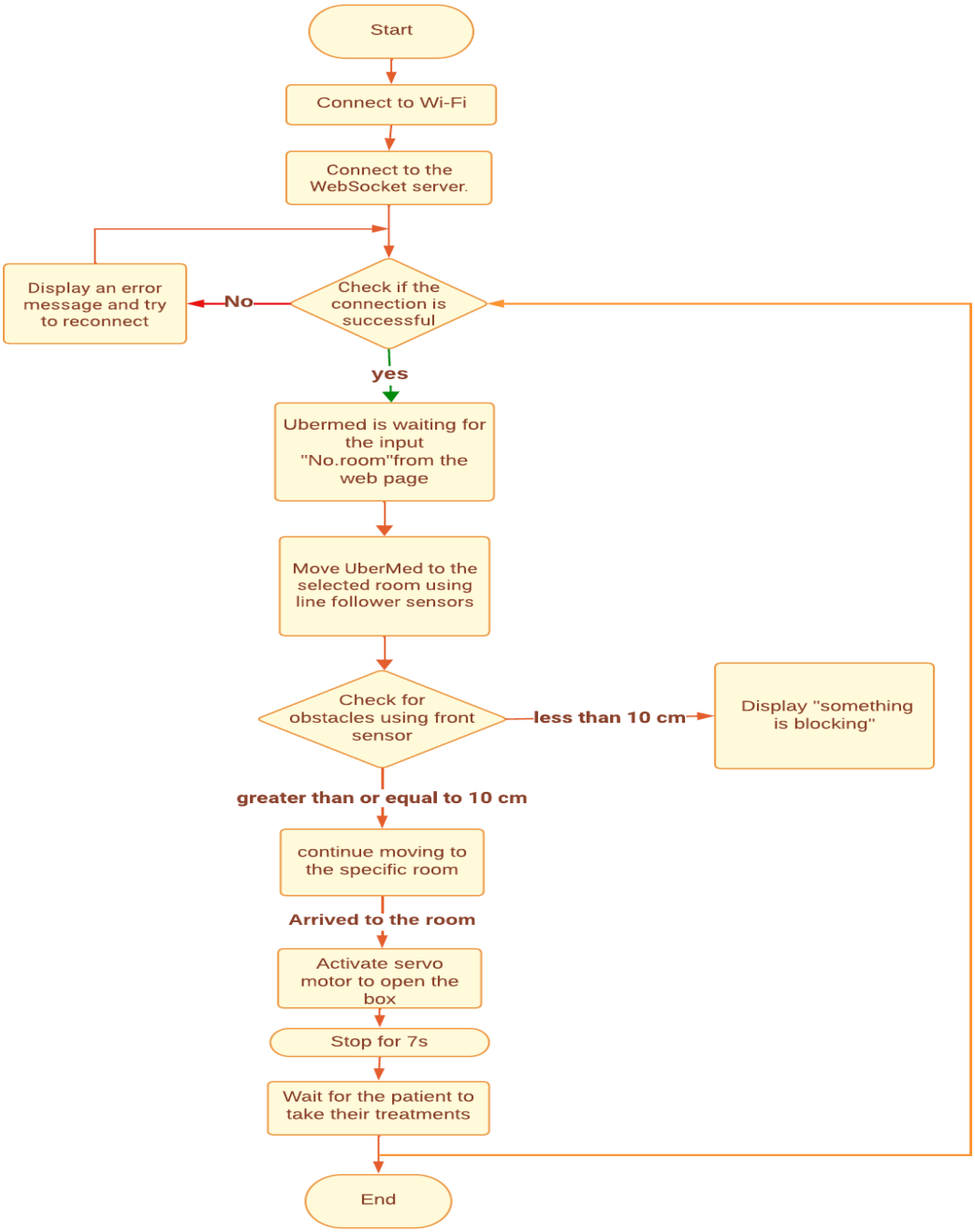

Fig. 4. Flowchart

1.5 ESP32 Code Using Arduino IDE

This code is created to control of an ESP32 through a web page using web sockets. It takes an input from various sensors such as an ultrasonic sensor and infrared sensors[2]. Additionally, it includes the capability to control four DC motors based on the input received from the sensors [3].

```
#include <ArduinoWebsockets.h> //inserting the required libraries
#include <ESP32Servo.h>
#include <WiFi.h>
#include <Arduino.h>

using namespace websockets;
WebsocketsClient socket;
const char* websocketServer = "ws://192.168.3.13:81/"; //initiate the variable for the IP address of the page
boolean connected = false;
```

Fig. 5. Code Libraries

```
//enter the ssid and password of the network where the websocket server is connected
const char* ssid = "HUAWEI-340C3P46_HiLink"; //name of the connected internet provider
const char* password = "C91777A3"; // password

const int trigPin = 27; //initiate trigger pin in ultrasonic sensor
const int echoPin = 26; //initiate echo pin in ultrasonic
int servoPin = 14; //initiate pin for servo motor
int ENA = 2; //initiate enable pin 1 for H-bridge motor driver
int IN1 = 4; //initiate pin for motor 1
int IN2 = 5; //initiate pin for motor 2
int IN3 = 18; //initiate pin for motor 3
int IN4 = 19; //initiate pin for motor 4
int ENB = 21; //initiate enable pin 2 for H-bridge motor driver
int rightIRPin = 32; //initiate pin for IR sensor 1
int leftIRPin = 33;  //initiate pin for IR sensor 2
const int frequency = 2000;
const int pwm_channela = 1;
const int pwm_channelb = 1;
const int resolution = 8;
#define SOUND_SPEED 0.034
#define CM_TO_INCH 0.393701
Servo myservo;
long duration;
float distanceCm;
float distanceInch;
```

Fig. 6. Code Variables and Pins

```
void setup() {
  Serial.begin(115200);
  connectWiFi();
  pinMode(trigPin, OUTPUT); // Sets the trigPin as an Output
  pinMode(echoPin, INPUT);  // Sets the echoPin as an Input
  // Sets all H-bridge motor driver pins as an Output
  pinMode(ENA, OUTPUT);
  pinMode(IN1, OUTPUT);
  pinMode(IN2, OUTPUT);
  pinMode(ENB, OUTPUT);
  pinMode(IN3, OUTPUT);
  pinMode(IN4, OUTPUT);
  // Sets all motors in a Low mode
  digitalWrite(IN1, LOW);
  digitalWrite(IN2, LOW);
  digitalWrite(IN3, LOW);
  digitalWrite(IN4, LOW);
  // Sets the IR sensors as an Input
  pinMode(rightIRPin,INPUT);
  pinMode(leftIRPin,INPUT);
myservo.attach(servoPin);
connectToWebSocket();
//enables read/write analog signals
  analogWrite(ENA, 70);
  analogWrite(ENB, 70);
socket.onEvent(handleEvent);
myservo.write(180);
}
```

Fig. 7. Code Setup Function

```
void loop() {

   float distanceCm =70;
   if(!connected) {
    Serial.println("Connecting to WebSocket server");
    connectToWebSocket();
   }  else{
    socket.poll();
   }
 WebsocketsMessage data = socket.readBlocking();
  String msg = data.data();
  Serial.println(msg);
  boolean var = true;

  while(msg== "Room1"){

 distanceCm = ultrasonic_read();
   if(distanceCm<10){
     Stop();
     socket.send(String(distanceCm));
 }
  else if((digitalRead(rightIRPin) == 0)&&(digitalRead(leftIRPin) == 0)){ forward();
  }
  //if Right Sensor is Black and Left Sensor is White then it will call turn Right function
  else if ((digitalRead(rightIRPin) == 1)&&(digitalRead(leftIRPin) == 0)){turnRight();}
  //if Left Sensor is Black and Right Sensor is White then it will call turn Left function
  else if ((digitalRead(rightIRPin) == 0)&&(digitalRead(leftIRPin) ==1))  {turnLeft();}
```

Fig. 8. Code Loop Function I

```
  else if((digitalRead(rightIRPin) == 1)&&(digitalRead(leftIRPin) == 1)){
        Stop();
        myservo.write(90);
        delay(7000);
        myservo.write(180);
        break;
        }
  }
  if(msg!="Room1"){
    Stop();
  }
  // Calculate the distance
   distanceCm = ultrasonic_read();
     String datam = String(distanceCm);
     socket.send(datam);
    }
 void turnLeft(){

digitalWrite(IN1, HIGH);  //Right Motor forword Pin
digitalWrite(IN2, LOW); //Right Motor backword Pin
digitalWrite(IN3, LOW);  //Left Motor backword Pin
digitalWrite(IN4, HIGH); //Left Motor forword Pin
 analogWrite(ENA, 70);
 analogWrite(ENB, 150);

}
```

Fig. 9. Code Loop function II and Turn Left Function

```
void turnRight(){

digitalWrite(IN1, LOW); //Right Motor forword Pin
digitalWrite(IN2, HIGH);  //Right Motor backword Pin
digitalWrite(IN3, HIGH); //Left Motor backword Pin
digitalWrite(IN4, LOW);  //Left Motor forword Pin
 analogWrite(ENA, 70);
 analogWrite(ENB, 150);
}

void forward (void)
{
  analogWrite(ENA, 90);
  analogWrite(ENB, 90);
  digitalWrite(IN1, HIGH);
  digitalWrite(IN2, LOW);
  digitalWrite(IN3, HIGH);
  digitalWrite(IN4, LOW);
}
 void Stop(){

digitalWrite(IN1, LOW); //Right Motor forword Pin
digitalWrite(IN2, LOW); //Right Motor backword Pin
digitalWrite(IN3, LOW); //Left Motor backword Pin
digitalWrite(IN4, LOW); //Left Motor forward Pin
 analogWrite(ENA, 0);
 analogWrite(ENB, 0);
 }
```

Fig. 10. Motors Direction Functions

```
long ultrasonic_read(){ //function for reading the distence for ultrasonic sensor
 digitalWrite(trigPin, LOW);
 delayMicroseconds(2);
 // Sets the trigPin on HIGH state for 10 micro seconds
 digitalWrite(trigPin, HIGH);
 delayMicroseconds(10);
 digitalWrite(trigPin, LOW);

 // Reads the echoPin, returns the sound wave travel time in microseconds
 duration = pulseIn(echoPin, HIGH);

 // Calculate the distance
 distanceCm = duration * SOUND_SPEED/2;
 return distanceCm;
}


void connectToWebSocket() { //function for checking the connection
 connected = socket.connect(websocketServer);
 if (connected) {
   Serial.println("Connected");
 }
 else {
   Serial.println("Connection failed.");
 }
}
```

Fig. 11. Ultrasonic Distance Measurement Function

```
void connectWiFi(){ //function for connecting the WiFi with the ESP32
  WiFi.mode(WIFI_OFF);
  delay(1000);
  //This line hides the viewing of ESP as wifi hotspot
  WiFi.mode(WIFI_STA);

  WiFi.begin(ssid, password);
  Serial.println("Connecting to WiFi");

  while (WiFi.status() != WL_CONNECTED) {
    delay(500);
    Serial.print(".");
  }
 Serial.print("connected to : "); Serial.println(ssid);
  Serial.print("IP address: "); Serial.println(WiFi.localIP());
}
```

Fig. 12. Connect to WiFi Function

```
void handleEvent(WebsocketsEvent event, WSInterfaceString data) { //function for handling the errors in the connection
  switch (event) {
    case WebsocketsEvent::ConnectionOpened:
      Serial.println("WebSocket connection established");
      socket.send("Hello, server!");
      connected = true;
      break;
    case WebsocketsEvent::ConnectionClosed:
      Serial.println("WebSocket connection closed");
      connected = false;
      break;
    case WebsocketsEvent::GotPing:
      Serial.println("Received ping");
      break;
    case WebsocketsEvent::GotPong:
      Serial.println("Received pong");
      break;
    default:
      break;
  }
}
```

Fig. 13. Handler Event Function

2. The Hardware Part

Materials:

1- 4-wheel Robot Smart Car Chassis Kit.

2- L298 Dual H-Bridge Module Motor Driver.

3-IR sensor.

4-Ultrasonic Distance Sensor Module.

5-ESP32 Development Board.

6-Buttery.

7-Breadboard.

8-Wires .

2. The Hardware Part

How it is work:

1- 4-wheel Robot Smart Car Chassis Kit:

is a kit that includes the mechanical structure for building a robot car with four wheels. It usually comes with motors, wheels, and a chassis frame. It's a starting point for building your robotic car.

2- L298 Dual H-Bridge Module Motor Driver.

is an integrated circuit that allows you to control the direction and speed of two DC motors. It's commonly used in robotics and other projects that require motor control [4].

3-IR sensor:

The module consists of an IR transmitter and receiver pair. The transmitter emits infrared light, and the receiver detects the reflected light. When an obstacle is present, the infrared light reflects to the receiver, triggering the sensor to indicate the presence of an obstacle. It's commonly used in robotics and automation projects to help robots navigate and avoid obstacles [5].

4-Ultrasonic Distance Sensor Module:

An ultrasonic sensor is an instrument that measures the distance to an object using ultrasonic sound waves. An ultrasonic sensor uses a transducer to send and receive ultrasonic pulses that relay back information about an object's proximity [6].

5-ESP32 Development Board:

With the ESP32 Development Board, you can easily connect to WiFi networks, allowing your project to access online resources, send data to the cloud, or communicate with other devices over the internet. Additionally, the built-in Bluetooth functionality enables you to connect and communicate with other Bluetooth devices, such as smartphones or sensors. The ESP32 Development Board offers a wide range of features and GPIO pins, making it suitable for various applications.

2. The Hardware Part

6-Battery:

A battery is a source of electric power consisting of one or more electrochemical cells with external connections for powering electrical devices.

7-Breadboard:

The breadboard has rows and columns of interconnected metal clips underneath the holes. You can insert electronic components, such as resistors, capacitors, and integrated circuits, into the holes and use jumper wires to create connections between them.

8-Wires:

wires are used to connect different components and create pathways for the flow of electrical current.

2. Hardware Circuit

The four-wheeled smart robot car body kit is composition , as well as connected to the L298 Dual H-Bridge Module Motor Driver.

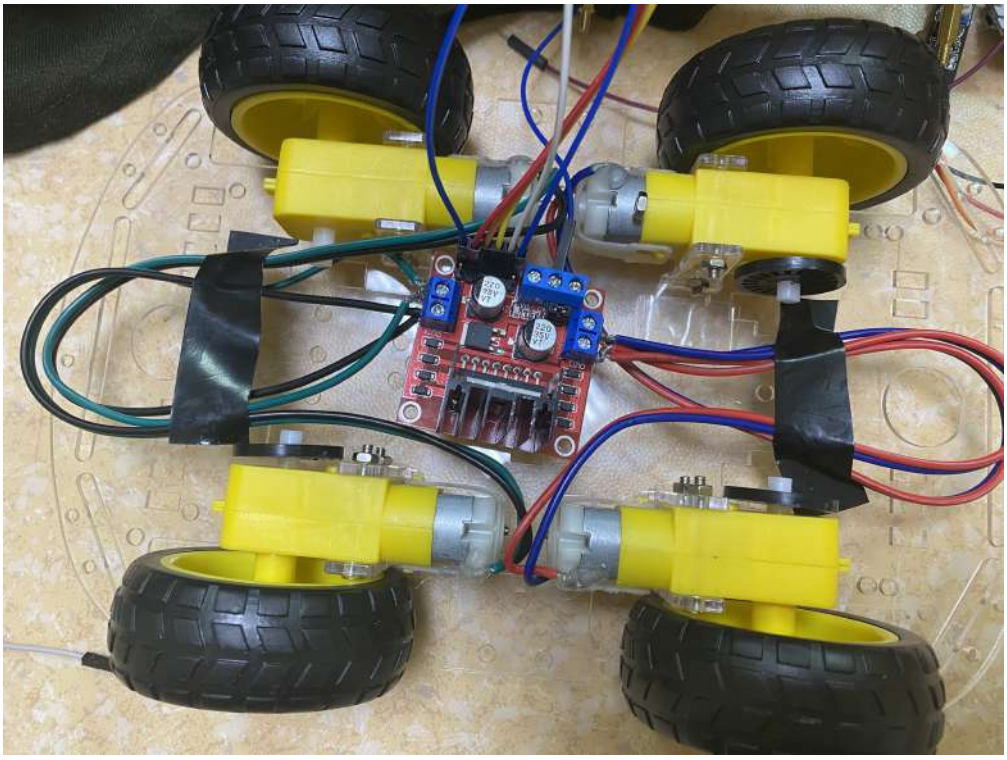

Fig. 14. Hardware Circuit

Connect the battery to the L298 Dual H-Bridge Module Motor Driver.

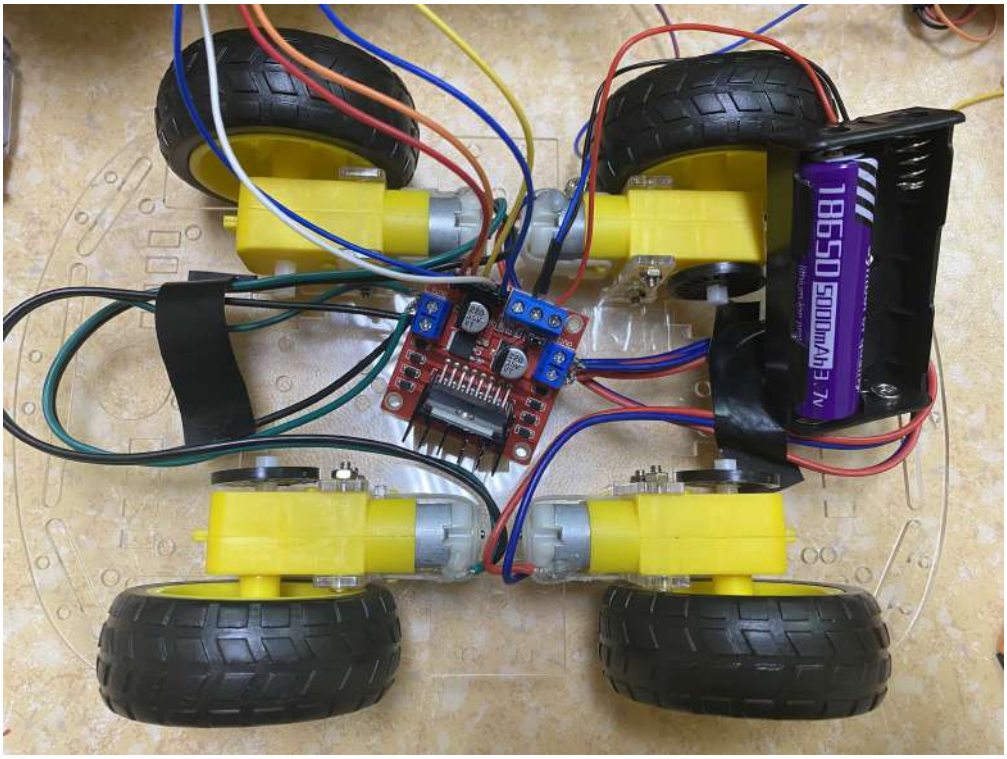

Fig. 15. Hardware Circuit

Connect all wires to the breadboard, connect the ESP32 Development Board WiFi+Bluetooth also.

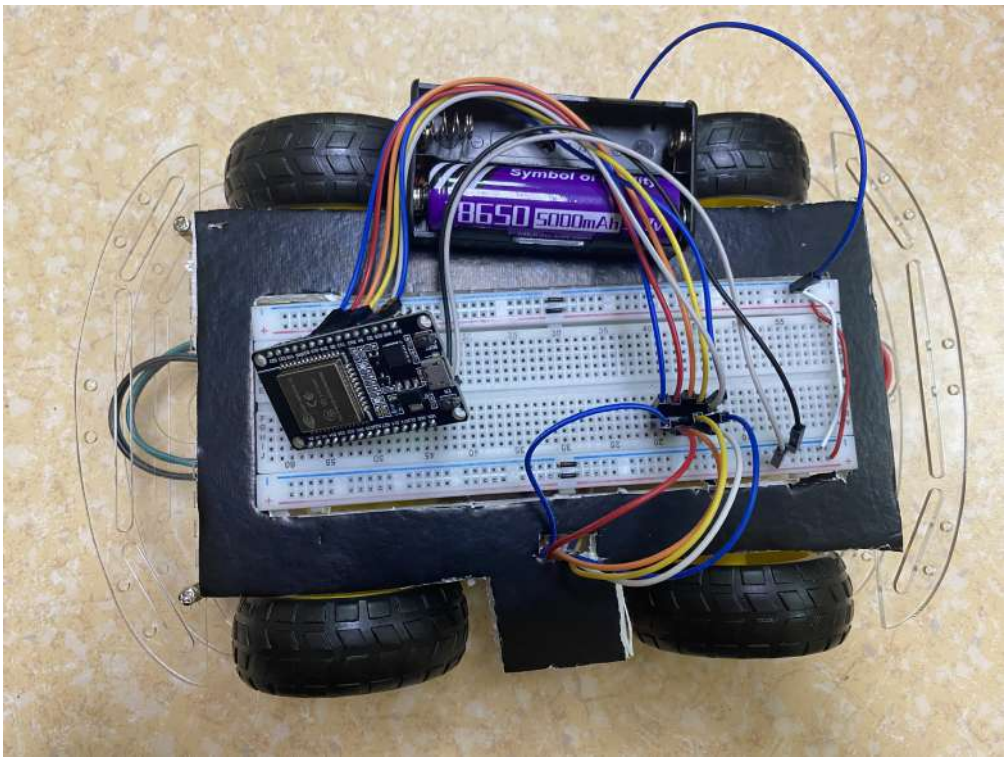

Fig. 16. Hardware Circuit

Add 2 IR sensors and connect them to the breadboard and ESP32 Development Board

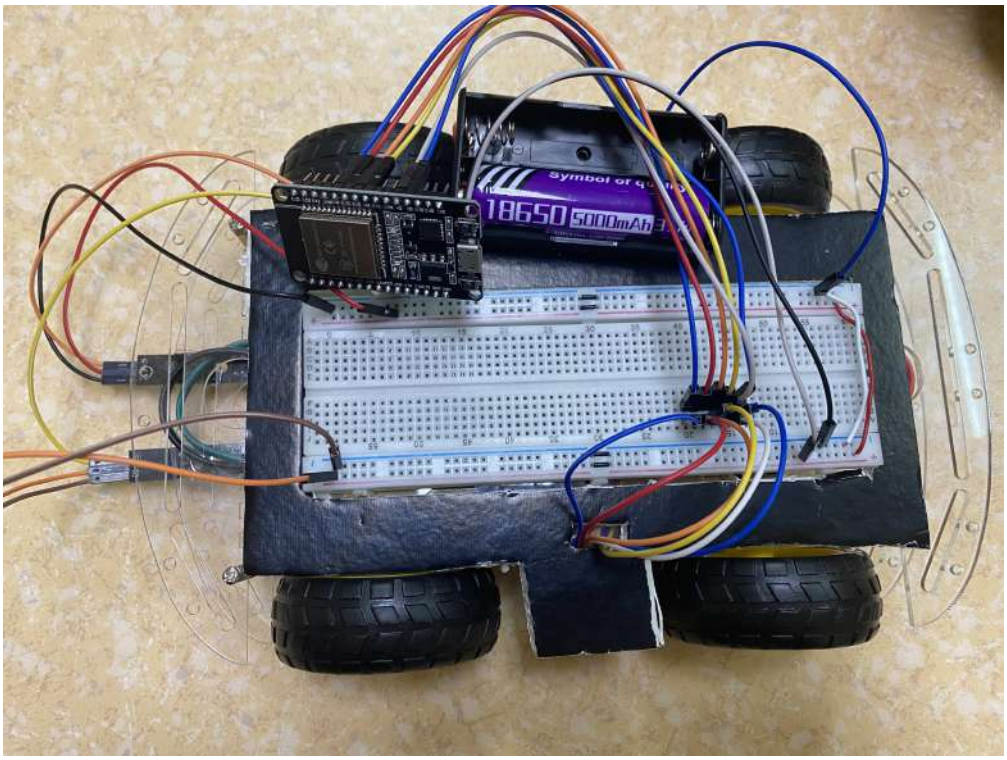

Fig. 17. Hardware Circuit

We will use the ultrasonic distance sensor to ensure that there is no object in front of the robot, and if there is, it will stop for a few seconds.

Fig. 18. Hardware Circuit

We will use a servo motor to open the box, so the patient can take his medications

Fig. 19. Hardware Circuit

III Results

A.Scenario for UberMed Robot:

The UberMed robot goes to the patient's room based on selecting the room number from the web page, by tracking the line follower using sensors on the front of the robot. When there is any object in front of the robot, the ultrasonic will be activated to stop moving and display "something is blocking" and then continue. When the robot reaches the designated room, it will open the box using the servo motor for the patient to take their treatments.

B. Case I :

As a start to use our UberMed you will open UberMed page and choose which room you want to deliver the medications to , press the room and UberMed will follow the path form start point to the chosen room.

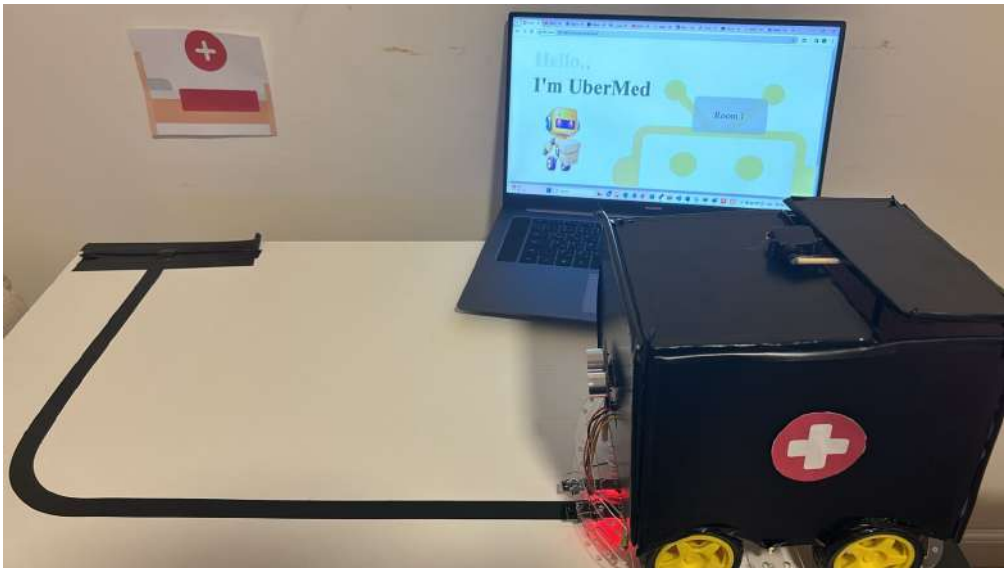

Fig. 20. Starting Point

C. Case II :

In this case after choosing room number one , UberMed will start moving unless the ultrasonic sense something in front of the robot then UberMed will stop and display on the web page " Something is blocking my way " .

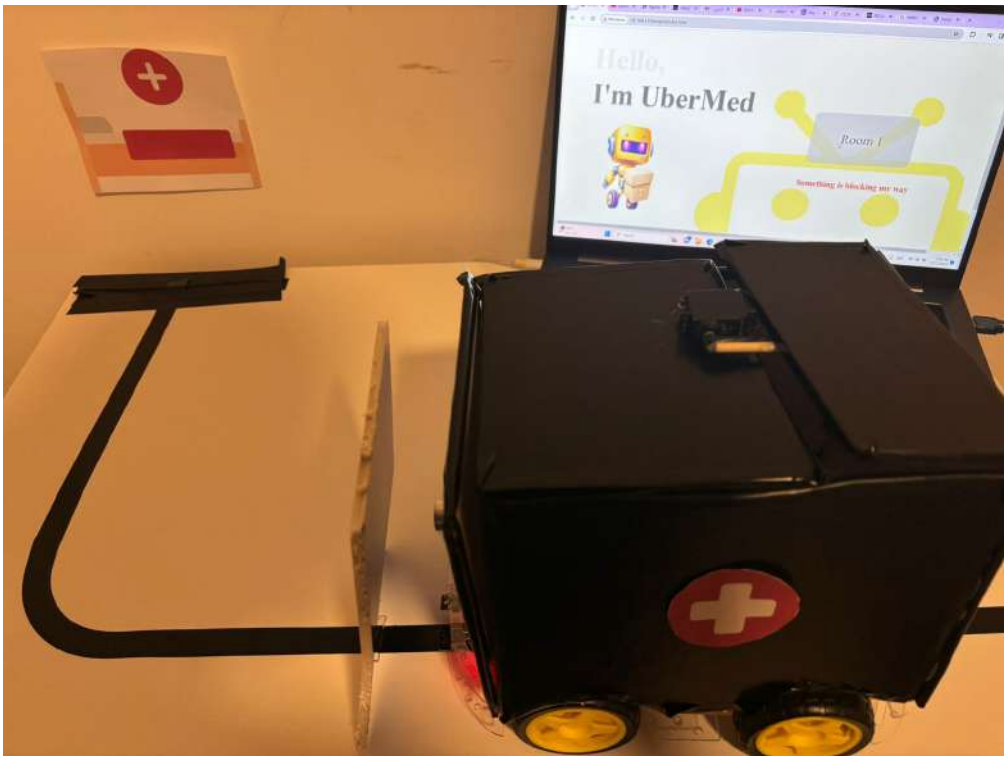

Fig. 21. UberMed Stops Because of an Obstacle

D. Case III :

After selecting the required room from the web page , UberMed will follow the path using IR sensors to the final destination , when UberMed arrives to the room without any obstacles on the way it will stop and open the box using a servo motor to let the patient take his medications .

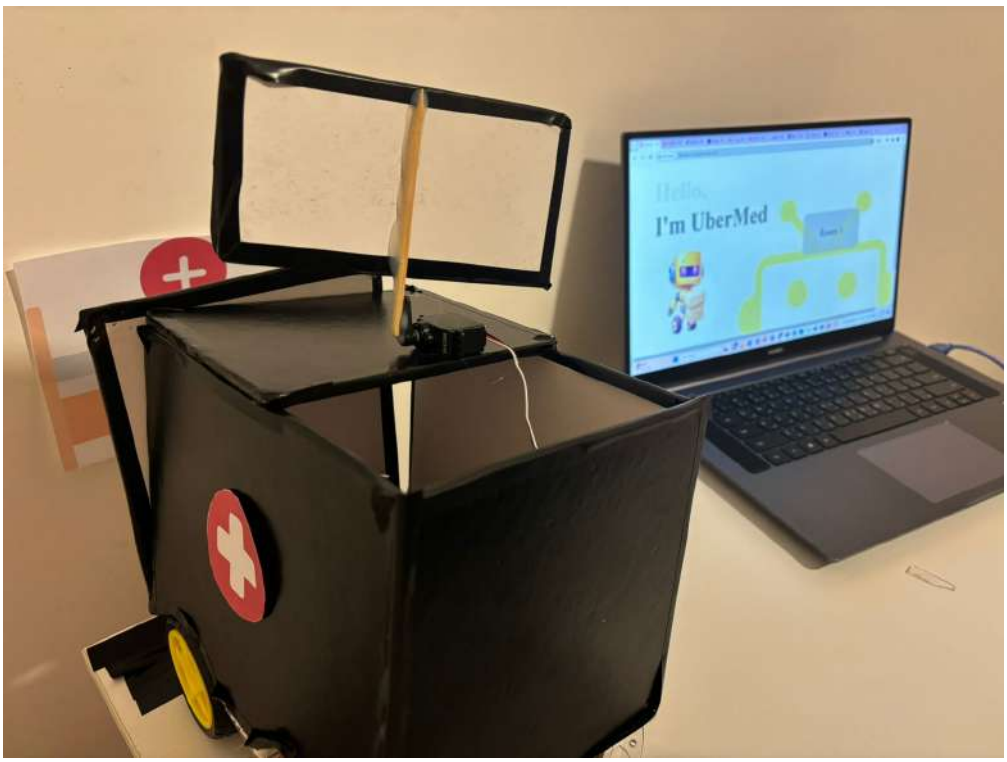

Fig. 22. UberMed Arrives to Destination and Open the Box Using Servo Motor

E. Case IV :

In this case after arriving to the selected room and deliver the medications to the patient the box will close and go back to starting point .

Fig. 23. UberMed Closes the Box Using Servo Motor

IV Conclusion

in conclusion As we reflect on the cumulative efforts to combat the pandemic, UberMed stands out as a testament to human ingenuity and resilience. It not only meets the immediate needs of the healthcare sector but also paves the way for future innovations that prioritize safety, efficiency, and the well-being of both front line workers and those under their care.UberMed is a promising step towards a more technologically empowered and secure future for healthcare delivery.

V References

[1] A. Patel, P. Sharma and P. Randhawa, 'Medbuddy: The medicine delivery robot,' *The Medicine Delivery Robot*, 2021. [Online]. Available: https://doi.org/10.1109/icrito51393.2021.9596130.

[2] S. Santos and S. Santos. 'Esp32 with hc-sr04 ultrasonic sensor with arduino ide | random nerd tutorials.' (2021), [Online]. Available: https://randomnerdtutorials.com/esp32-hc-sr04-ultrasonic-arduino/.

[3] 'Building an easy line follower robot using arduino uno.' (), [Online]. Available: https://circuitdigest.com/microcontroller-projects/arduino-uno-line-follower-robot.

[4] 'L298n dual h bridge motor driver.' (), [Online]. Available: https://www.robotpark.com/L298N-Dual-H-Bridge-Motor-Driver.

[5] A. Kekre. 'Ir infrared obstacle avoidance sensor with arduino - aditya kekre - medium.' (2021), [Online]. Available: https://medium.com/@kekreaditya/ir-infrared-obstacle-avoidance-sensor-with-arduino-714837ad9ef5.

[6] C. Carlson. 'How ultrasonic sensors work.' (2023), [Online]. Available: https://maxbotix.com/blogs/blog/how-ultrasonic-sensors-work.