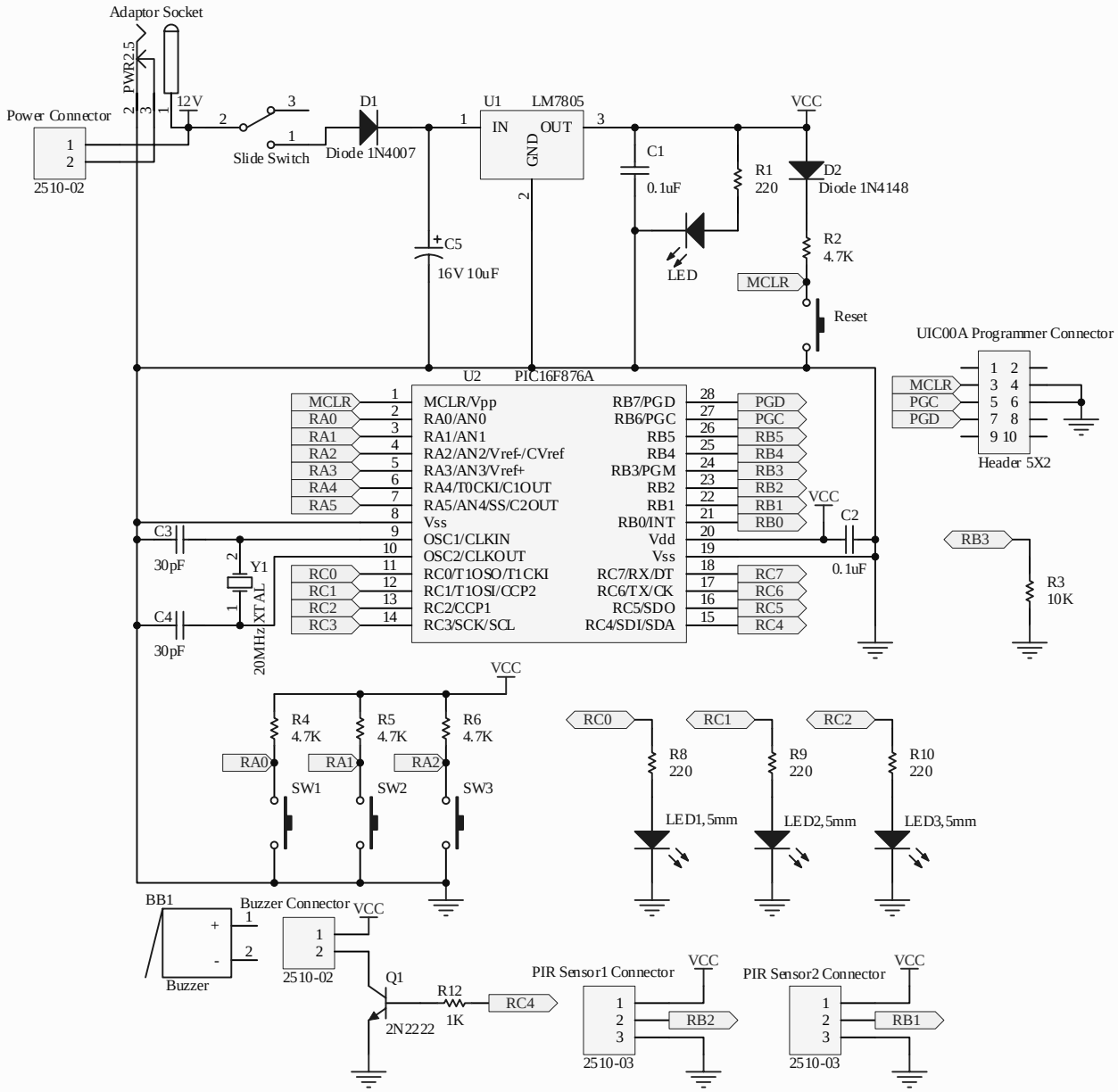

Title: PR14 Schematic		
Size: A4	Number:	Revision: Ver1.0
Date: 6/12/2009		Sheet of
File: D:\[project]\..\PR14 Motion.SchDoc		Drawn By: