STM32

File: stm32.kicad_sch

Gestion de l'énergie

File: gestiondelenergie.kicad_sch

Motorisation

File: Motorisationv2.kicad_sch

Communications et capteurs

File: capteurs.kicad_sch

ENSEA

Sheet: /
File: ProjetKicadPCBOT.kicad_sch

Title: PCB BOT rahim 974

Size: A4	Date: 2026-02-07	**Rev: 1.0**
KiCad E.D.A. 9.0.0		Id: 1/5

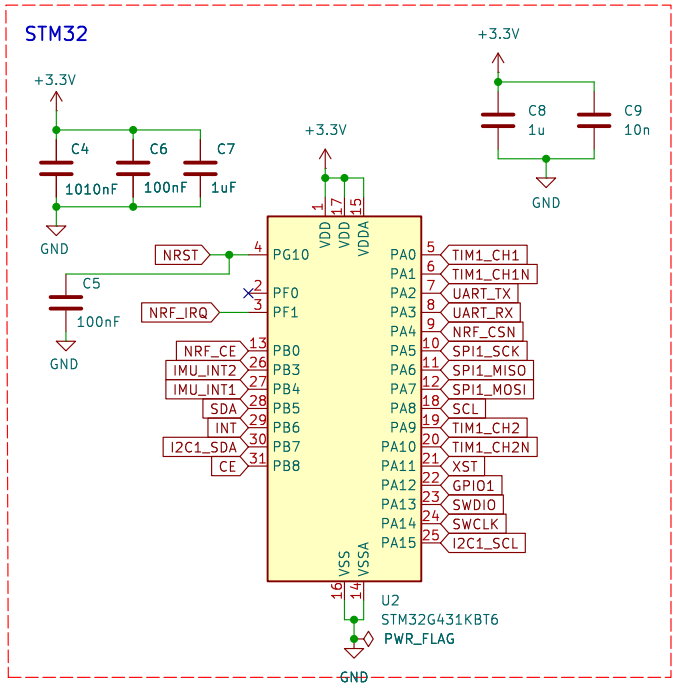

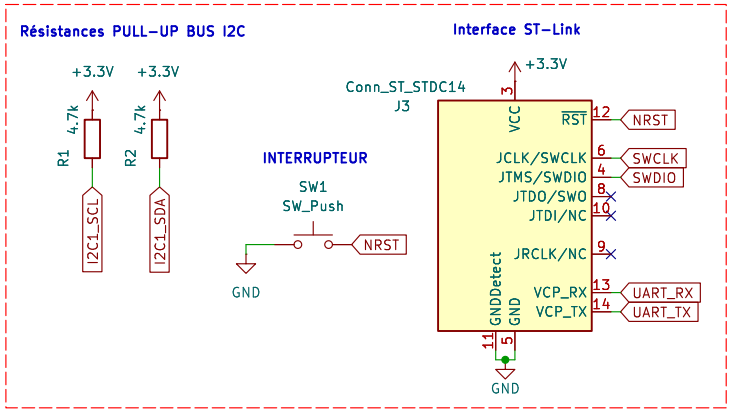

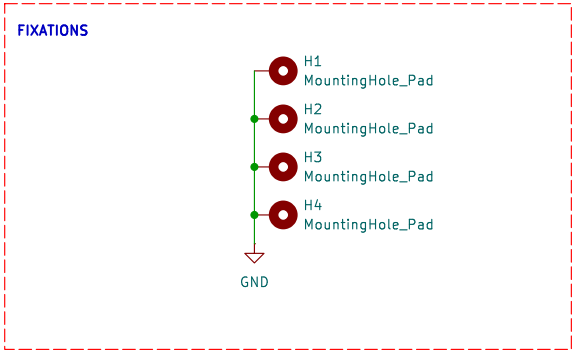

ENSEA

Sheet: /STM32/
File: stm32.kicad_sch

Title: PCB BOT rahim 974

Size: A4	Date: 2026-02-07	**Rev: 1.0**
KiCad E.D.A. 9.0.0		Id: 2/5

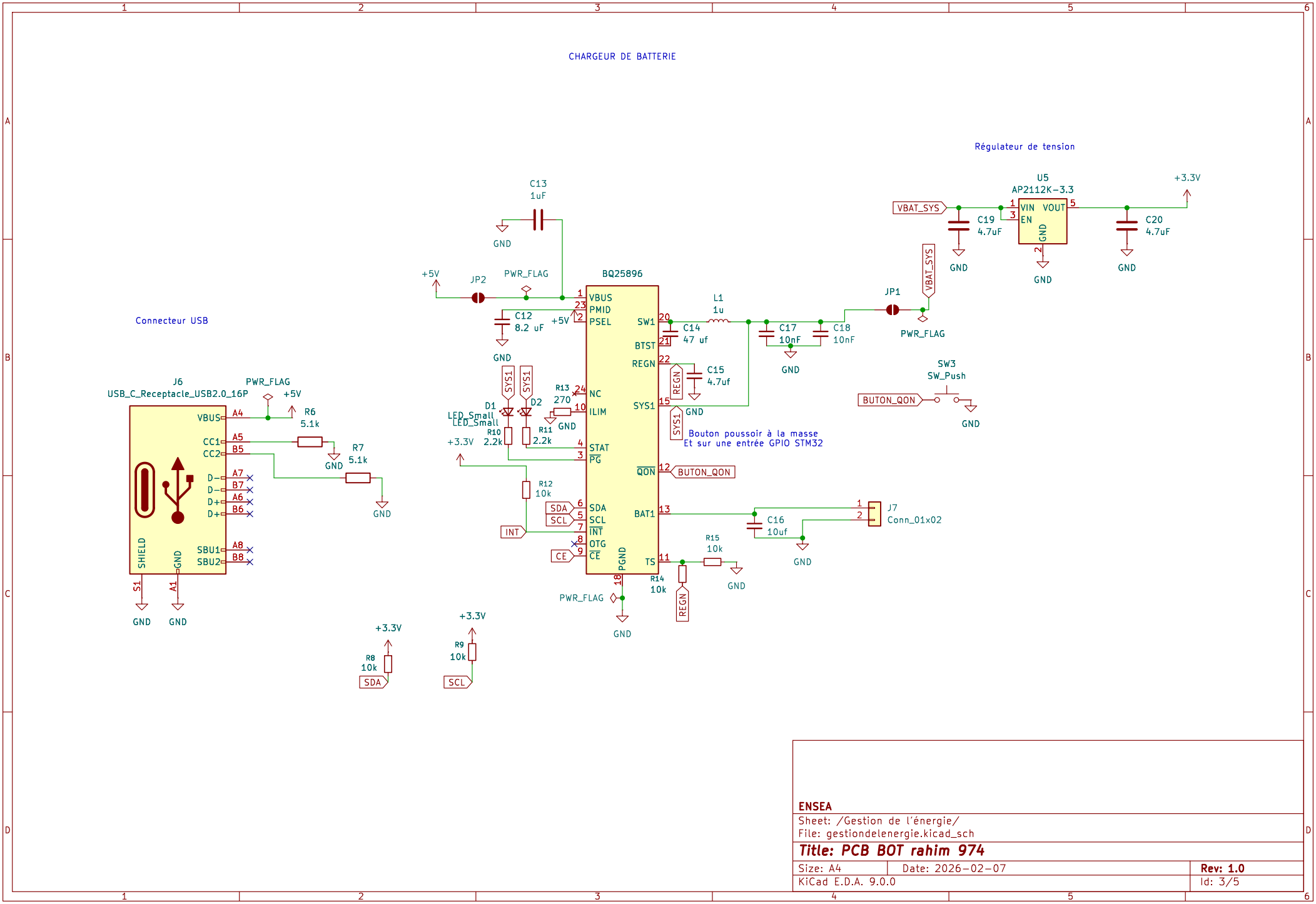

ENSEA

Sheet: /Gestion de l'énergie/

File: gestiondelenergie.kicad_sch

Title: PCB BOT rahim 974

Size: A4	Date: 2026-02-07	**Rev: 1.0**
KiCad E.D.A. 9.0.0		Id: 3/5

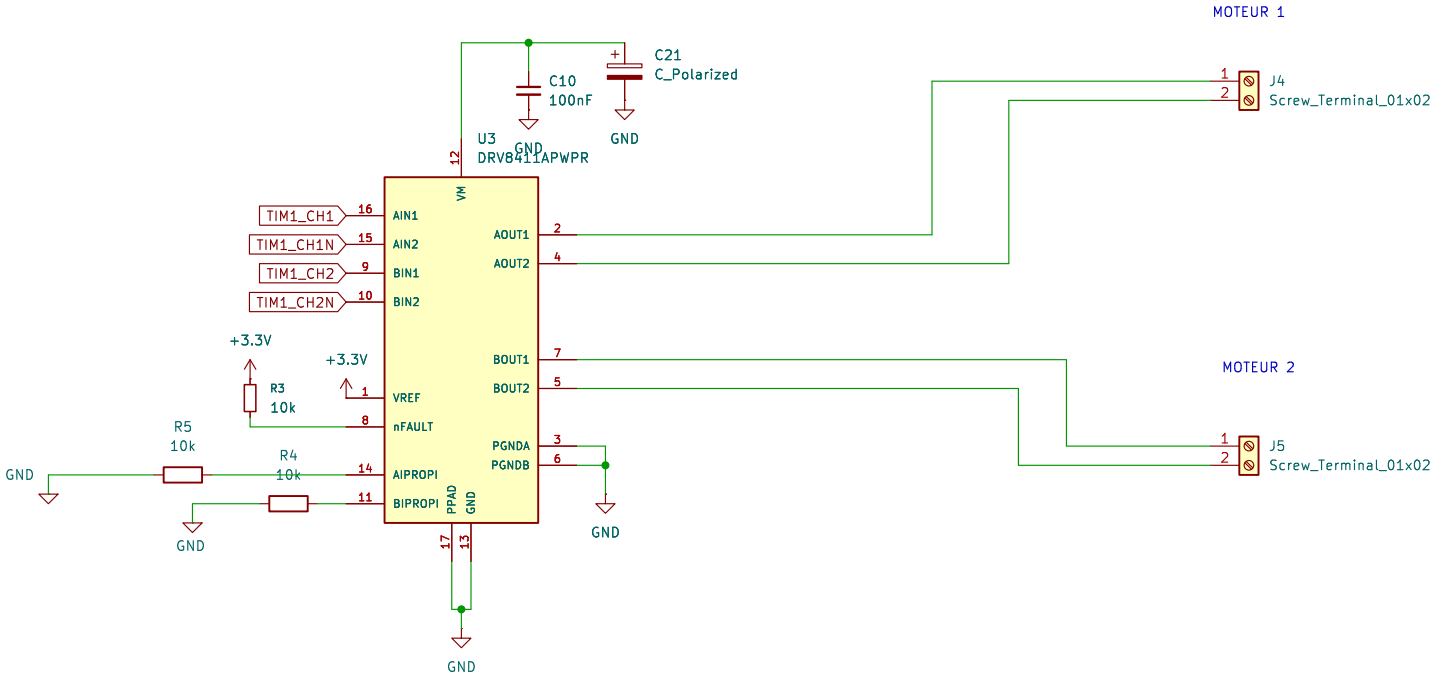

ENSEA

Sheet: /Motorisation/

File: Motorisationv2.kicad_sch

Title: PCB BOT rahim 974

Size: A4	Date: 2026-02-07	**Rev: 1.0**
KiCad E.D.A. 9.0.0		Id: 4/5

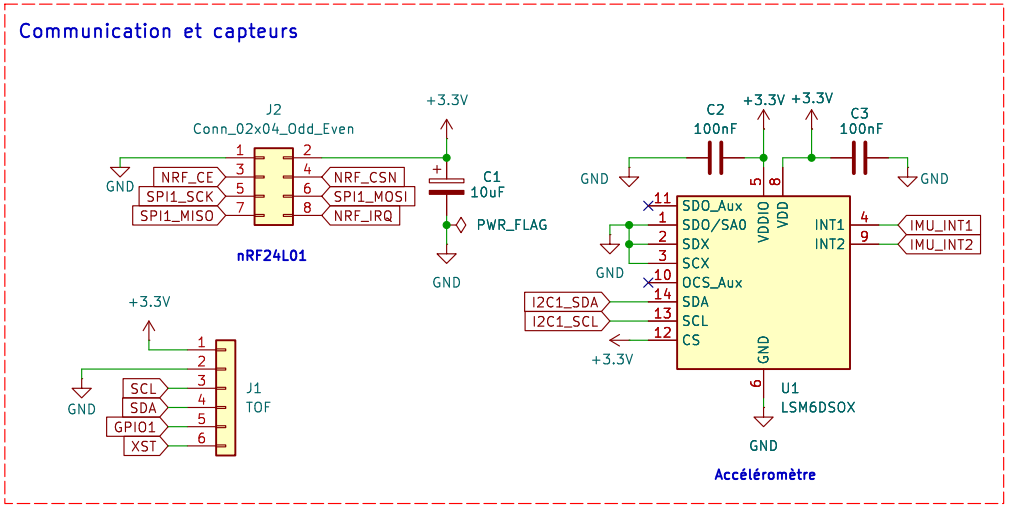

ENSEA

Sheet: /Communications et capteurs/
File: capteurs.kicad_sch

Title: PCB BOT rahim 974

Size: A4	Date: 2026-02-07	**Rev: 1.0**
KiCad E.D.A. 9.0.0		Id: 5/5