Real-Time Drunk Driver Test Structure Design and Execution with Entrance Restriction

Sabbir Hossain
Dept. of CSE
American International University-Bangladesh (AIUB)
Dhaka, Bangladesh
23-50308-1@student.aiub.edu

MD. Rafidul Islam
Dept. of CSE
American International University-Bangladesh (AIUB)
Dhaka, Bangladesh
23-50343-1@student.aiub.edu

Tinjilur Rahman Fahim
Dept. of CSE
American International University-Bangladesh (AIUB)
Dhaka, Bangladesh
22-48092-2@student.aiub.edu

Marin Rahman
Dept. of CSE
American International University-Bangladesh (AIUB)
Dhaka, Bangladesh
23-52296-2@student.aiub.edu

Muhibul Haque Bhuyan
Dept. of EEE
American International University-Bangladesh (AIUB)
Dhaka, Bangladesh
muhibulhb@aiub.edu

***Abstract*—This paper aims to design and implement a real-time drunk driver detection scheme that automatically restricts vehicle entry if alcohol is detected. The system uses an Arduino Uno as the main controller, an IR proximity sensor to detect vehicle presence, a mini brushless fan to collect breath samples, and an MQ-3 alcohol sensor to check the alcohol content. A 16×2 LCD monitor is used to display the system generated messages, a buzzer provides an alert sound when alcohol is detected, and a servo motor controls the gate barrier. If no alcohol is found, the gate opens for a few seconds to allow the vehicle to pass; otherwise, the gate remains closed. The system has been successfully simulated in simulator software and implemented a prototype at a hardware level, proving reliability. This scheme is a low-priced solution related to the prevalent schemes.**

Keywords—Alcohol Detection, Drunk Driving Prevention, Arduino Uno, Vehicle Entry Control, Road Safety System.

I. Introduction

Alcohol is an ingredient that diminishes the character of a person by weakening intellectual ability, cognitive judgement, psychomotor skill levels, and muscle power [1]. All such skills are crucial to operational safety of a vehicle. Road accidents caused by drunk driving are one of the key reasons for injury and cost of lives worldwide [2]. Approximately 34 persons die in the United States due to the drunk-driving road crashes. In 2023, 12,429 deaths were reported due to the alcohol-related road crashes. This number is about 30% of the total road accident-related death toll [3]. According to the World Health Organization (WHO) estimation, 25% of all road accidents are triggered by alcohol-linked occurrences [4]. Such incidences not only causing a higher number of deaths toll but also creating a huge economical losses in terms of medical costs, production loss, efficiency degradation, and establishment damage [5]. However, such cases could be prevented had the detection drunk-driving system could be made automated and as such drivers could be restrained from driving [6]. Traditional enforcement methods rely heavily on manual breath analyzer tests and checkpoints, which are time-consuming and limited in coverage. This research proposes an automated entry-restriction system that performs real-time alcohol detection and disables vehicle ignition, ensuring that an intoxicated driver cannot operate the vehicle.

The principal objective of this research endeavor is to plan and realize a cost-effective and reliable circuit that

- ✓ Senses alcohol amount in the driver's smell in real-time.
- ✓ Stops the vehicle ignition when alcohol is sensed.
- ✓ Alerts the environment using visual and audible signals.

This research work contributes to road safety, accident prevention, and public awareness by integrating automation into traffic safety systems.

II. Appraisal of Recent Research Papers

Multiple studies have examined alcohol detection and road safety systems that use microcontrollers, alcohol sensors, and automated vehicle control mechanisms [7-11]. In the world, many countries have blood alcohol concentration (BAC) limit set for different categories of drivers ranging from 0-0.8 gm/L [12]. The purpose of the alcohol sensing scheme is to prevent drunk driving by combining low-cost sensors with controllers, like PIC or Arduino. These controllers process alcohol level readings and trigger preventive or alert actions. However, it was found that the attitude development is very important including providing knowledge the drivers to avoid drunk driving for safety of lives and properties [13]. In one paper, the authors presented an ignition cut-off system that uses an alcohol sensor in the steering wheel alongside a PIC microcontroller [14]. If alcohol is detected, the car automatically shuts down. In another paper, the authors built on this idea by adding seatbelt monitoring to the alcohol detection system, acknowledging that various factors lead to road accidents [15].

Several studies have pointed out how Arduino-based setups support low-cost solutions [16-19]. The authors in [20] created an alcohol detection device featuring an MQ-series sensor that sends data to Arduino, activating an LED, buzzer, and phone notification. Similarly, the authors in [21] analyzed an Arduino-based alcohol detection system with MQ-3 sensor. These studies highlight affordability and sensitivity but also uncover issues like calibration challenges, false positives from ambient alcohol, and limited deployment potential.

Recent advancements have looked into multimodal systems that merge alcohol detection with other safety features. The authors in [22] suggested a wearable device based on Arduino Uno that is built into glasses. This device combines MQ-3 alcohol sensing with infrared sensors for drowsiness detection and SMS alerts for emergencies. They investigated statistically utilizing t-tests and ANOVA test, and revealed that there is no striking variances in efficiency due to the eye construction or the volume of alcohol consumed by

the driver. Their evaluation showed reliable accuracy and consistency, though they noted concerns about hardware size and calibration. This indicates a trend moving from single-factor detection to multi-sensor, user-focused safety systems.

In summary, these studies demonstrated how alcohol sensors, microcontrollers, and additional safety technologies can be used to prevent drunk driving. Building on these methods, our current work suggests an Arduino Uno-based vehicle entry control system. This system combines an MQ-3 alcohol sensor with an IR proximity sensor, a mini brushless fan for accurate breath sampling, a servo motor for gate operation, and a buzzer and LCD for user feedback. Unlike earlier systems, ours emphasizes active breath collection and restricting access at entry points, making sure intoxicated drivers cannot access the vehicle before starting it. This approach offers a cost-effective, reliable, and tested solution for improving road safety.

III. Work Flow Style

The real-time drunk and drive test system with entry restriction operates on the principle of breath alcohol detection combined with automated access control. The system is designed to check the sobriety of the driver before granting entry to a vehicle.

When the system is powered ON, the LCD monitor display shows the project title, indicating that the system is active and ready. The IR proximity sensor continuously monitors for a vehicle or object in its detection range. As soon as the IR sensor detects a vehicle, the LCD screen displays "VEHICLE DETECTED" to notify that the checking process has started. Next, the 5V brushless fan is activated to pull air from the driver's side and direct it toward the MQ3 alcohol sensor placed behind it. The MQ3 sensor then performs 15 sampling checks to ensure accurate detection of alcohol levels in the breath.

If alcohol is not detected, then the LCD monitor displays "NO ALCOHOL DETECTED – ACCESS GRANTED." The servo motor rotates, opening the gate or barrier, thus allowing the driver to pass. On the other hand, if alcohol is detected, then the LCD monitor displays "ALCOHOL DETECTED – ACCESS DENIED." The servo motor remains in the closed position, and the buzzer is activated to alert nearby personnel about the detection.

This process ensures that drivers under the influence of alcohol are automatically denied entry, thereby preventing drunk driving. The system works in real-time, is completely automated, and does not require human intervention.

A. Hardware Setup

The LCD monitor is an I2C module that has mainly four pins, such as SDA, SCL, VCC, and GND, which are linked to the Arduino Uno's A4 pin, A5 pin, VCC pin, and Ground pin. Besides, an IR proximity sensor has three pins, such as D0, VCC, and GND, which are coupled to the microcontroller's digital pin 7, VCC pin, and Ground pin. An alcohol sensor, MQ3, which is housed in a chamber, is involved to the Arduino's analog pin, A0. VCC and GND pins of the I2C unit are also associated to the corresponding pins of the Arduino. A servo motor is used to rotate the entry gate of the parking area. Its control signal comes from the Arduino Uno's discrete signal-level pin 8. A brushless DC fan is allied to the Arduino Uno's digital pin 6 to blow the alcohol scent into the MQ3 sensor chamber. A buzzer is attached to the Arduino's digital pin 5. The power source unit is connected to the Arduino's DC power supply port. A battery holder is used to hold the DC battery, which is used to make the system portable. The system arrangement is revealed in Fig. 1 block-wise.

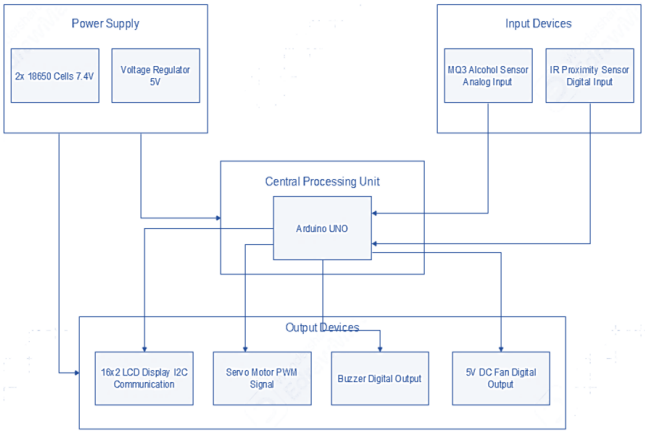

Fig. 1. Experimental arrangement of the vehicle entry control scheme.

The Arduino program was written using the Arduino IDE. The code first shows the project title on the LCD, then continuously monitors the IR sensor. If a vehicle is detected, the fan is activated, and the MQ-3 sensor is read 10 times. If even one reading crosses the alcohol threshold, the system immediately denies access, sounds the buzzer, and keeps the gate closed. If all readings are safe, the servo motor opens the gate for three seconds before closing it again. The real-time hardware arrangement is depicted in Fig. 2.

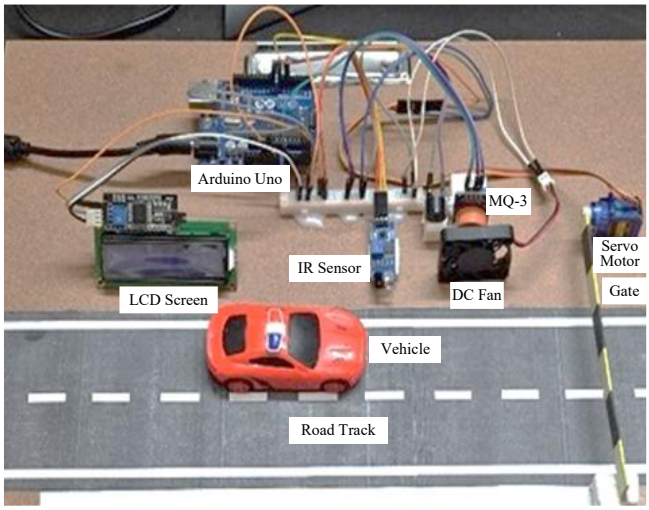

Fig. 2. Hardware arrangement of the driver's drunk scheme.

The hardware prototype was assembled on a breadboard, and the system was powered using rechargeable 18650 cells. The fan placement directly in front of the MQ-3 sensor improves breath sample detection.

B. Software Development

The software is programmed in the Arduino Integrated Development Environment (IDE), which is shown in Fig. 3. This flowchart represents the working process of an automatic alcohol detection and access control system for vehicles. The step-by-step processes are as follows:

At the start, the system is powered on or initialized. Then, the system prepares all sensors and components, for example, the vehicle detection sensor, alcohol sensor, gate controller, and buzzer, to be ready for operation.

If no vehicle is noticed by the scheme, it keeps monitoring until a vehicle arrives. If a vehicle is sensed by checking the arrangement and any vehicle is found there then the system check whether there is any alcohol presence through a sensor and a blower fan run by the DC motor. The alcohol sensor takes multiple readings (at least 10 time) to confirm accuracy and reliability. The system compares the average or accrued count against a set threshold value. If the readings are below the threshold level, that is no alcohol is found. In this case, the system opens the entry gate and closes it after a delay of 3 s so that further entry can be blocked.

However, if the readings exceed the threshold value, that means alcohol is detected. In this case, the access is denied, that is, the vehicle entry is not allowed and the gate remains closed. As such, the buzzer is on to alert the security personnel. After completing the cycle, the system returns to monitoring mode again and waits for the next vehicle starting the vehicle sensor scanning.

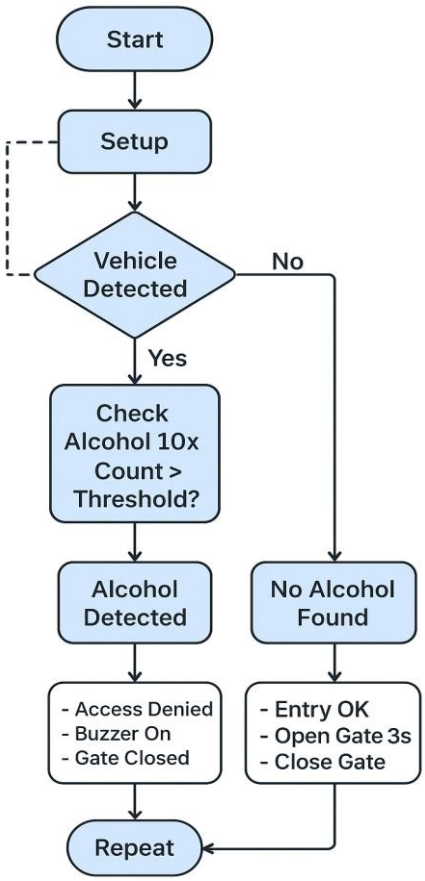

Fig. 3. Flowchart of the vehicle entry control system.

IV. Results and Outcomes

The system was simulated in Proteus simulator and then implemented in hardware level. Hardware tests were performed using different alcohol concentrations and without using alcohol. The results showed that

- The system successfully prevented entry when alcohol was present.
- Alert systems (buzzer sounding and LED blinking) worked reliably.
- Response time was within a few milliseconds, suitable for real-time applications.

The system was tested under three different scenarios as shown in Table I.

TABLE I. Working Process in Different Scenarios

Test Case	MQ3 Reading	LCD Output	Gate Action	Buzzer
Vehicle present, no alcohol	Below threshold	"NO ALCOHOL FOUND – ENTRY OK"	Opens for 3s, then Closes	OFF
Vehicle present, alcohol present	Above threshold	"ALCOHOL FOUND – ACCESS DENIED"	Remains Closed	ON(2s)
No vehicle present	N/A	Cycles through project title screens	Closed	OFF

The simulation is performed using Proteus software [23]. The simulation outcomes are visible in Figs. 4-6. The results show that the system is working in different modes of operation, and hence the motor is rotating as per the instructions given to the system. The change of the servo motor is also noted.

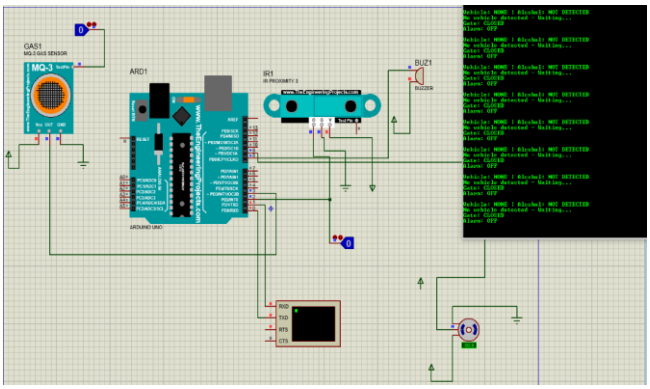

Fig. 4. Simulation outcomes of no automobile detected.

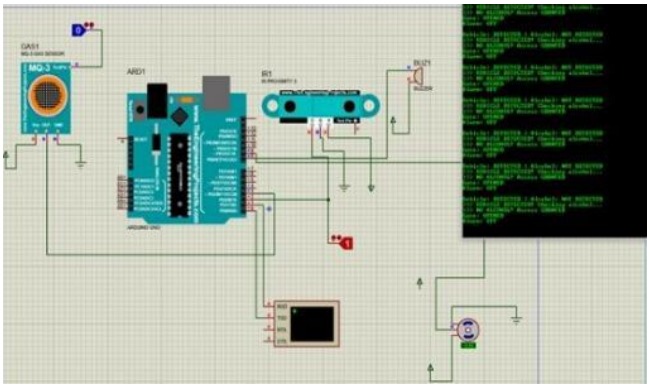

Fig. 5. Simulation outcomes of automobile detection without alcohol.

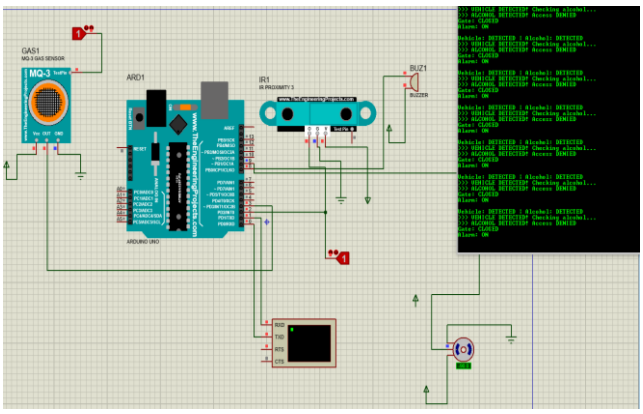

Fig. 6. Simulation outcomes of automobile detection with alcohol.

The hardware prototype is tested in different situations and is shown in Figs. 7-8. The results show that the system is working in different modes of operation. The LCD monitor

shows that no alcohol is detected, and therefore, the gate is opened (right side, raised higher), as shown in Fig. 7. On the other hand, the LCD monitor shows that alcohol is detected, and therefore, the gate is closed (right side, the gate is lowered), as shown in Fig. 8.

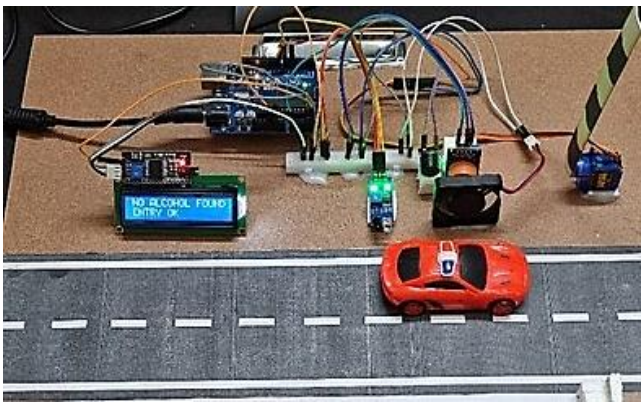

Fig. 7. Experimental results demonstrating that the gate is opened as no alcohol is detected from the incoming vehicle's driver.

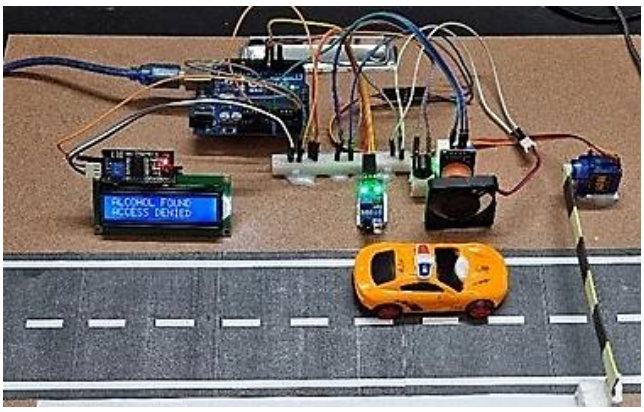

Fig. 8. Experimental results demonstrating that the gate is opened as alcohol is detected from the incoming vehicle's driver.

A. Cost Analysis

The total price of Using the "typical" scenario component-by-component, roughly, amounts to ৳5045 (Bangladeshi Currency of Taka five thousand and forty five only), or its equivalent US$41.7 (US Dollar forty one point seven only) [24]. This cost breakdown is provided in Table II.

TABLE II. BREAKDOWN OF EXPENDITURES FOR THE ALCHOHOL DRIVER RESTRICTION SCHEME

Component Name	Quantity	Price in BDT (৳)
Arduino UNO	1	1218
MQ-3 sensor	1	365
IR sensor	1	183
Servo motor	1	731
LCD I2C module	1	478
Buzzer	1	122
Rechargeable battery cells	2	1096
Fan	1	365
Breadboard, wires, holder, etc.	1	487
	Total	**5045**

B. Comparative Analysis

The proposed scheme was compared with diverse existing systems found in the literature as shown in Table III. It was found that the proposed scheme was better in terms of several parameters, like sensors, actuators, cost, displays, etc.

TABLE III. WORKING PROCESS IN DIFFERENT SCENARIOS

Work	Controller	Sensor	Actuator	Display	Other Features	Cost Level
Ref. [25]	PIC 18F4550 MC	MQ-3 Alcohol Sensor, Voice Module (APR2060)	Relay for ignition control	16×2 LCD Screen	Focuses on disabling vehicle ignition	Moderate
Ref. [26]	Arduino Uno	MQ-3 Alcohol Sensor	Relay, Buzzer	LCD Screen	Automatic engine lock, alert mechanism	Low
Ref. [27]	Arduino Uno	MQ-3 Alcohol Sensor	Buzzer, Relay	LED Indicator	Simple prototype for educational use	Very Low
Ref. [28]	Raspberry Pi	MQ-6 > Alcohol Sensor, DS18B20 > Temperature Sensor	Motor Driver, Buzzer	LCD Screen	GPS > sends vehicle's current site, GPRS > tracks data to the server, GSM > sends SMS to owner's mobile	High
Ref. [29]	Arduino Uno	MQ-3 Alcohol Sensor, Ignition Switch, MEMS Sensor	Relay, Motor, Buzzer	LCD Screen	GPS > sends vehicle's current site; GSM > sends SMS to owner's cell, engine cutoff	High
Ref. [30]	Arduino Uno	MQ-3 Alcohol Sensor, Ultrasonic Sensor	Relay, DC Motor, Buzzer	16×2 LCD Screen, LED Indicator	GPRS > tracks data to the server, GSM > sends SMS to owner's cell, engine cutoff	High
This Work	Arduino Uno	MQ-3 Alcohol Sensor, IR Proximity Sensor, Mini Brushless Fan	Servo Motor, Buzzer	16×2 LCD Screen	Automated gate barrier, real-time restriction, low-cost reliable hardware	Low

V. CONCLUSIONS

This research work successfully demonstrates a real-time, automatic drunk and drive test system that prevents entry of vehicles when alcohol is detected. It uses affordable hardware components and simple control logic, making it suitable for parking lots, industrial facilities, and checkpoints.

Future Improvement plans:

- ✓ Integration with IoT to log data remotely.
- ✓ SMS alert to authorities when alcohol is detected.
- ✓ Automatic vehicle ignition cutoff for stricter safety enforcement.

ACKNOWLEDGMENT

The authors openly declare their appreciation to the Department of Electrical and Electronic Engineering at the American International University-Bangladesh, Dhaka, for their priceless funding, granting access to the laboratory testing facilities, and providing technical guidance throughout this research work. The author acknowledges the AIUB authority for the full financial allowances for conference registration and participation.

REFERENCES

[1] NHSTA: National Center for Statistics and Analysis of National Highway Traffic Safety Administration (NHSTA). (2023) US Department of Transportation. New Jersey Avenue SE, Washington, DC, USA. Link: https://www.nhtsa.gov/risky-driving/drunk-driving, accessed on 12 September 2025.

[2] O. O. Alabi, O. A. Adeaga, S. A. Ajagbe, E. O. Adekunle, M. O. Adigun, "Design and implementation of an alcohol detection driver system," International Journal of Reconfigurable and Embedded Systems (IJRES), vol. 13, No. 2, July 2024, pp. 278-285, doi: https://doi.org/10.11591/ijres.v13.i2.pp278-285.

[3] FARS: Fatality Analysis Reporting System (FARS). (2025). State Alcohol-Impaired-Driving Estimates. Traffic Safety Facts, 2023 Data. National Highway Traffic Safety Administration (NHSTA). US Department of Transportation. NJ Avenue SE, Washington, DC, USA. June 2025. Link: https://crashstats.nhtsa.dot.gov/#!/PublicationList/7, accessed on 12 September 2025.

[4] C. M. Farmer, "Potential lives saved by in-vehicle alcohol detection systems," Traffic Injury Prevention, vol. 22, no. 1, pp. 7-12, January 2021, doi: https://doi.org/10.1080/15389588.2020.1836366.

[5] G. Gasparesc, "Driver alcohol detection system based on virtual instrumentation," IFAC-PapersOnLine, vol. 51, no. 6, pp. 502-507, 2018, doi: https://doi.org/10.1016/j.ifacol.2018.07.110.

[6] T. Takata, "Alcohol detection system and method for vehicle," United States Patent, Patent No. US 8,201.437 B2, 19 June 2012. Link: https://patentimages.storage.googleapis.com/d3/b8/7b/97f0bd76cb6d5e/US8201437.pdf, accessed on 12 September 2025.

[7] A. Shaikh, S. Shaikh, L. Dhotre, "Automatic Braking System through Alcohol Detection and Wireless Control," International Journal of Engineering Technology Research and Management, vol. 9, issue 5, May 2025, pp. 223-228. Link: https://ijetrm.com/issues/files/May-2025-09-1746796937-MAY23.pdf, accessed on 12 September 2025.

[8] H. KR, S. Shanmugan, H. Moorthy, C. L. Dewangan and R. K. Lenka, "Prevention from Road Accidents due to Drunk Driver using IoT," 2024 IEEE International Conference on Communication, Computing and Signal Processing (IICCCS), ASANSOL, India, 2024, pp. 1-6, doi: https://doi.org/10.1109/IICCCS61609.2024.10763726.

[9] P. Sharma and N. Sood, "Application of IoT and Machine Learning for Real-time Driver Monitoring and Assisting Device," 2020 IEEE 11th International Conference on Computing, Communication and Networking Technologies (ICCCNT), Kharagpur, India, 1-3 July 2020, pp. 1-7, doi: https://doi.org/10.1109/ICCCNT49239.2020.9225387.

[10] B. D. Tushar, T. Riyad, Q. R. Yazdi, J. Islam, and M. H. Bhuyan, "Design, Simulation, Building, and Testing of a Microcontroller-Based Automatic Drowsiness Detection, Vehicle Braking, and Alert System," Journal of Engineering Research and Reports, vol. 26, issue 3, March 2024, pp. 208-223. doi: https://doi.org/10.9734/jerr/2024/v26i31106.

[11] R. R. Varghese, P. M. Jacob, J. Jacob, M. N. Babu, R. Ravikanth and S. M. George, "An Integrated Framework for Driver Drowsiness Detection and Alcohol Intoxication using Machine Learning," *2021 International Conference on Data Analytics for Business and Industry (ICDABI)*, Sakheer, Bahrain, 2021, pp. 531-536, doi: https://doi.org/10.1109/ICDABI53623.2021.9655979.

[12] IRTAD Research Report, "Alcohol-Related Road Casualties in Official Crash Statistics," International Traffic Safety Data and Analysis Group, The International Transport Forum, Link: https://www.itf-oecd.org/sites/default/files/docs/alcohol-related-road-casualties-official-crash-statistics.pdf, accessed on 12 September 2025.

[13] S. Baum, "Drink driving as a social problem: comparing the attitudes and knowledge of drink driving offenders and the general community," Accident Analysis & Prevention, vol. 32, issue 5, 2000, pp. 689-694, doi: https://doi.org/10.1016/S0001-4575(99)00106-2.

[14] N. James, C. Aparna, and T. P. John, "Alcohol Detection System," International Journal of Research in Computer and Communication Technology, vol 3, issue 1, January 2014, pp. 59-64.

[15] M. Malathi, R. Sujitha and M. R. Revathy, "Alcohol detection and seat belt control system using Arduino," IEEE 2017 International Conference on Innovations in Information, Embedded and Communication Systems (ICIIECS), Coimbatore, India, 2017, pp. 1-3, doi: https://doi.org/10.1109/ICIIECS.2017.8275841.

[16] M. H. Bhuyan, M. A. Ali, S. A. Khan, M. R. Islam, T. Islam, and J. Akter, "Design and Implementation of Solar Power and an IoT-Based Pisciculture Management System," Journal of Engineering Research and Reports, vol. 24, issue 2, January 2023, pp. 15-27. doi: https://doi.org/10.9734/jerr/2023/v24i2799.

[17] M. H. Bhuyan, M. M. Haque, M. A. Rauf, and M. M. I. Khan, "Design and Implementation of a Microcontroller-Based Elevator Control System," Proceedings of the Conference on Engineering Research, Innovation, and Education, SUST, Sylhet, Bangladesh, 11-13 Jan. 2011, pp. 504-507.

[18] N. K. Paul, D. Saha, K. Biswas, S. Akter, R. T. Islam, and M. H. Bhuyan, "Smart Trash Collection System–An IoT and Microcontroller-Based Scheme," Journal of Engineering Research and Reports, vol. 24, issue 11, 3 Apr. 2023, pp. 1-13. doi: https://doi.org/10.9734/jerr/2023/v24i11849.

[19] M. H. Bhuyan and M. Sheikh, "Designing, Implementing, and Testing of a Microcontroller and IoT-based Pulse Oximeter Device," IOSR Journal of Electrical and Electronics Engineering, vol. 16, issue 5, September-October 2021, pp. 38-48.

[20] S. S. Shukla and S. Suman, "Arduino Based Alcohol Detection System," Journal on Information Technology, 2021, vol 10, issue 3, p. 33, doi: 10.26634/jit.10.3.15073, Link: https://tinyurl.com/yder7m6f.

[21] S. Hariharan, S. Barath, R. Monica, and R. Madhumitha, "Arduino-Based Alcohol Detection Device: Enhancing Safety in Vehicle Operation through Sensor Technology," Asian Journal of Applied Science and Technology (AJAST), vol. 8, issue 1, pp. 133-150, January-March 2024. Link: https://ajast.net/data/uploads/67541.pdf, accessed on 2nd September 2025.

[22] G. H. B. Kline, F. I. B. Bolivar, C. N. T. Nacar, A. D. D. Domingo, A. G. G. Baldonado, A. M. S. Sunga, J. N. Bautista, and J. A. Limos-Galay, "Drowsiness and alcohol detection system using Arduino Uno," International Journal of Research Studies in Educational Technology, vol. 8, issue 2, pp. 45-52, 15 July 2024. doi: https://doi.org/10.5861/ijrset.2024.8010.

[23] M. H. Bhuyan and M. Hasan, "Design and Simulation of Heartbeat Measurement System using Arduino Microcontroller in Proteus," International Journal of Biomedical and Biological Engineering, vol. 14, no. 10, 2020, pp. 350-357.

[24] Interbank USD/BDT exchange rate on Central Bank of Bangladesh: https://www.bb.org.bd/en/index.php/econdata/exchangerate, accessed on 20 September 2025.

[25] T. Bhagyashri S, V. V. Joshi, S. Bhagayshree U, and R. Suvarna P, "Alcohol Detection using PIC Microcontroller," International Journal of Science, Technology, and Engineering, vol. 3, issue 9, March 2017, pp. 161–165. Link: https://www.ijste.org/articles/IJSTEV3I9064.pdf, accessed on 20 August 2025.

[26] T. Bhatt, S. Bhatt, R. Nolkha, and T. Ramji, "Alcohol Detector and Engine Locking System Using Arduino Uno and MQ3 Sensor," 2025 IEEE International Conference on Emerging Technologies and Applications (MPSec ICETA), Gwalior, India, 2025, pp. 1-6, doi: https://doi.org/10.1109/MPSecICETA64837.2025.11118798.

[27] D. Garg, A. K. Srivastava, D. Paliwal, S. Shekhar, A. S. Chauhan, "Alcohol Detection System in Vehicle Using Arduino," Journal of Xi' an Shiyou University, Natural Science Edition, vol. 16, no. 9, pp. 105–108, 2022. Link: http://xisdxjxsu.asia/, accessed on 10 September 2025.

[28] P. A. Shinde and Y. B. Mane, "Advanced vehicle monitoring and tracking system based on Raspberry Pi," 2015 IEEE 9th International Conference on Intelligent Systems and Control (ISCO), Coimbatore, India, 2015, pp. 1-6, doi: https://doi.org/10.1109/ISCO.2015.7282250.

[29] A. Tarun, G. S. Alekhya, P. Govardhan, P. A. Raju, "IoT Based Alcohol Detection and Engine Locking System with GPS," International Journal for Research in Applied Science and Engineering Technology (IJRASET), vol. 13, Issue III, March 2025, pp. 1030–1037. doi: https://doi.org/10.22214/ijraset.2025.67468.

[30] P. Shukla, U. Srivastava, S. Singh, R. Tripathi, R. R. Sharma, "Automatic Engine Locking System Through Alcohol Detection," International Journal of Engineering Research & Technology (IJERT), vol. 9, issue 5, May 2020, Paper Availability Link: https://www.ijert.org/research/automatic-engine-locking-system-through-alcohol-detection-IJERTV9IS050528.pdf, accessed on 20 September 2025.