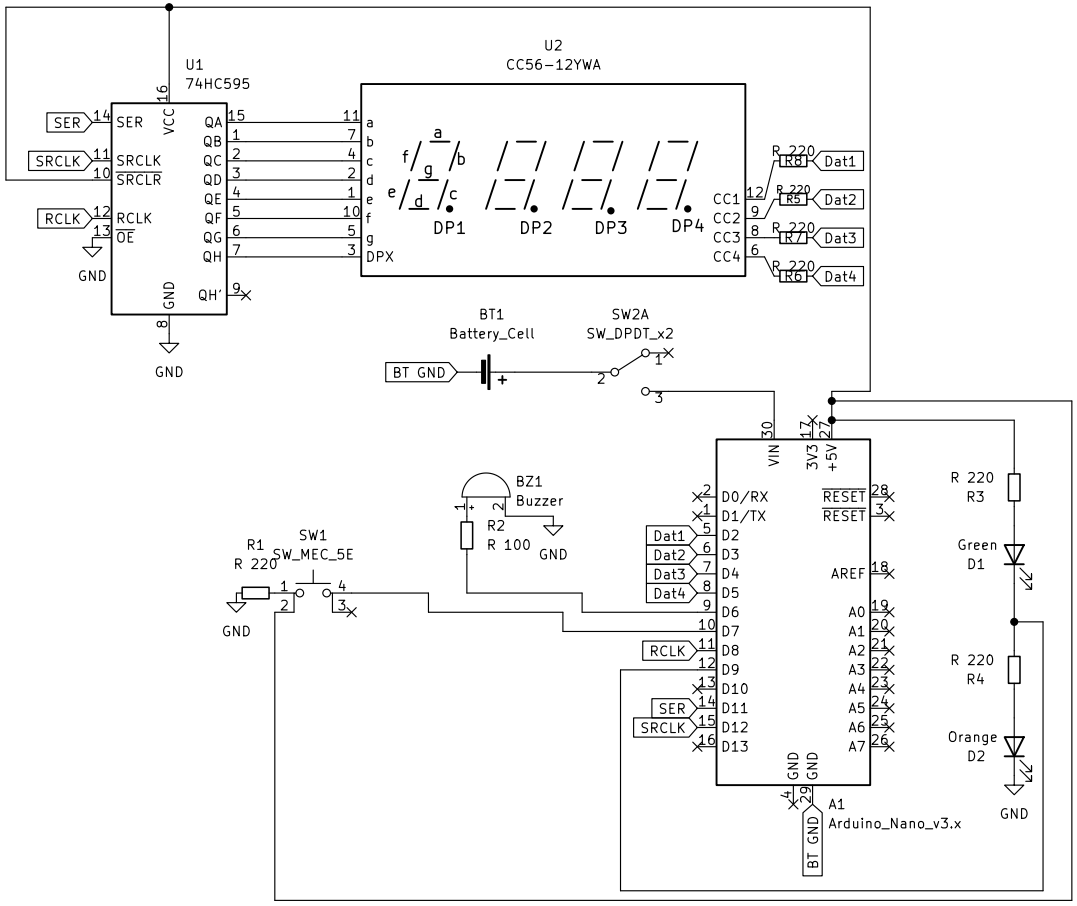

Sheet: /
File: Schematics.kicad_sch

Title: Pomodoro Device

Size: A4	Date: 15-01-2021	**Rev:**
KiCad E.D.A. kicad (6.0.0-0)		Id: 1/1