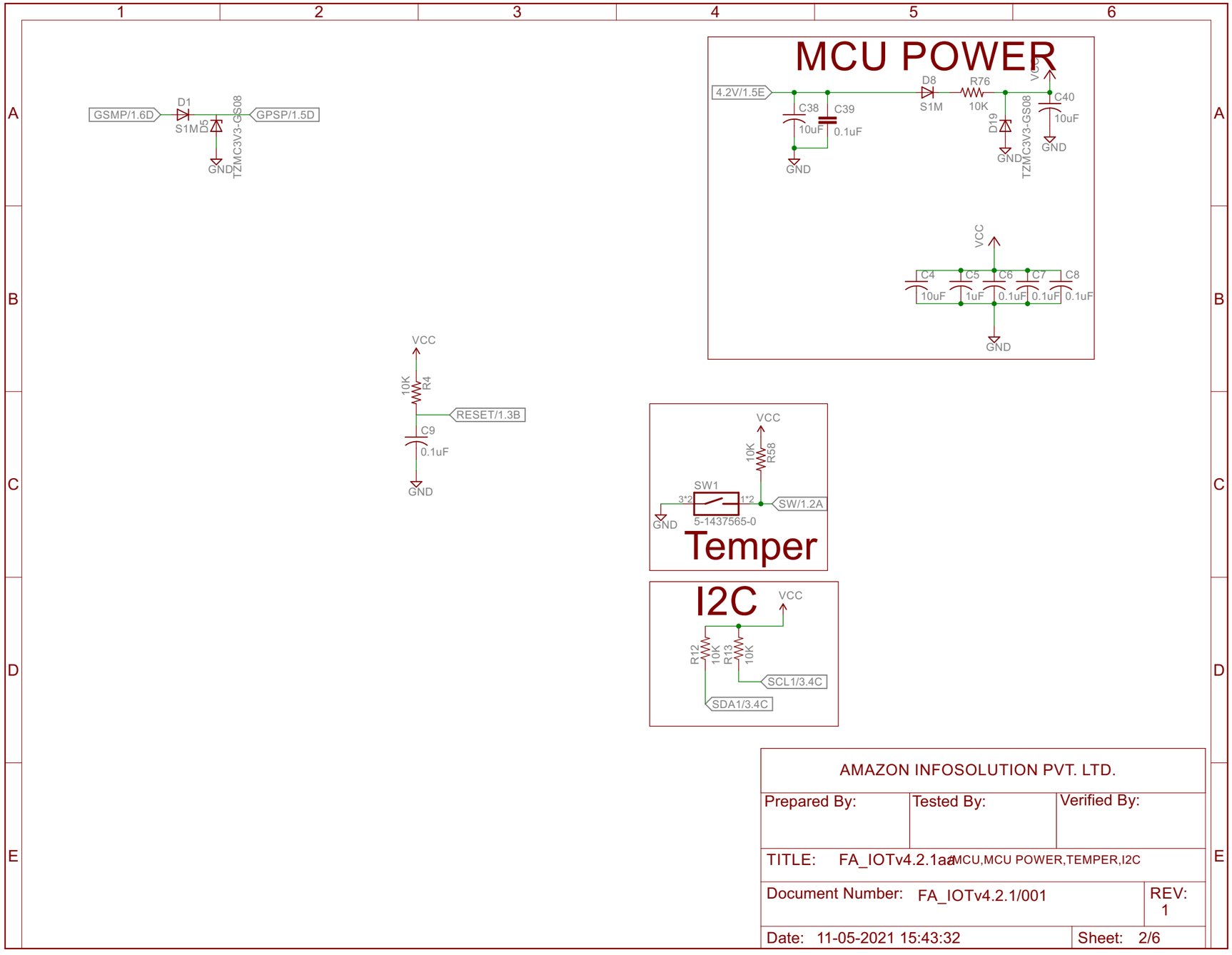

AMAZON INFOSOLUTION PVT. LTD.		
Prepared By:	Tested By:	Verified By:
TITLE: FA_IOTv4.2.1aa MCU,MCU POWER,TEMPER,I2C		
Document Number: FA_IOTv4.2.1/001		REV: 1
Date: 11-05-2021 15:43:32	Sheet: 2/6	