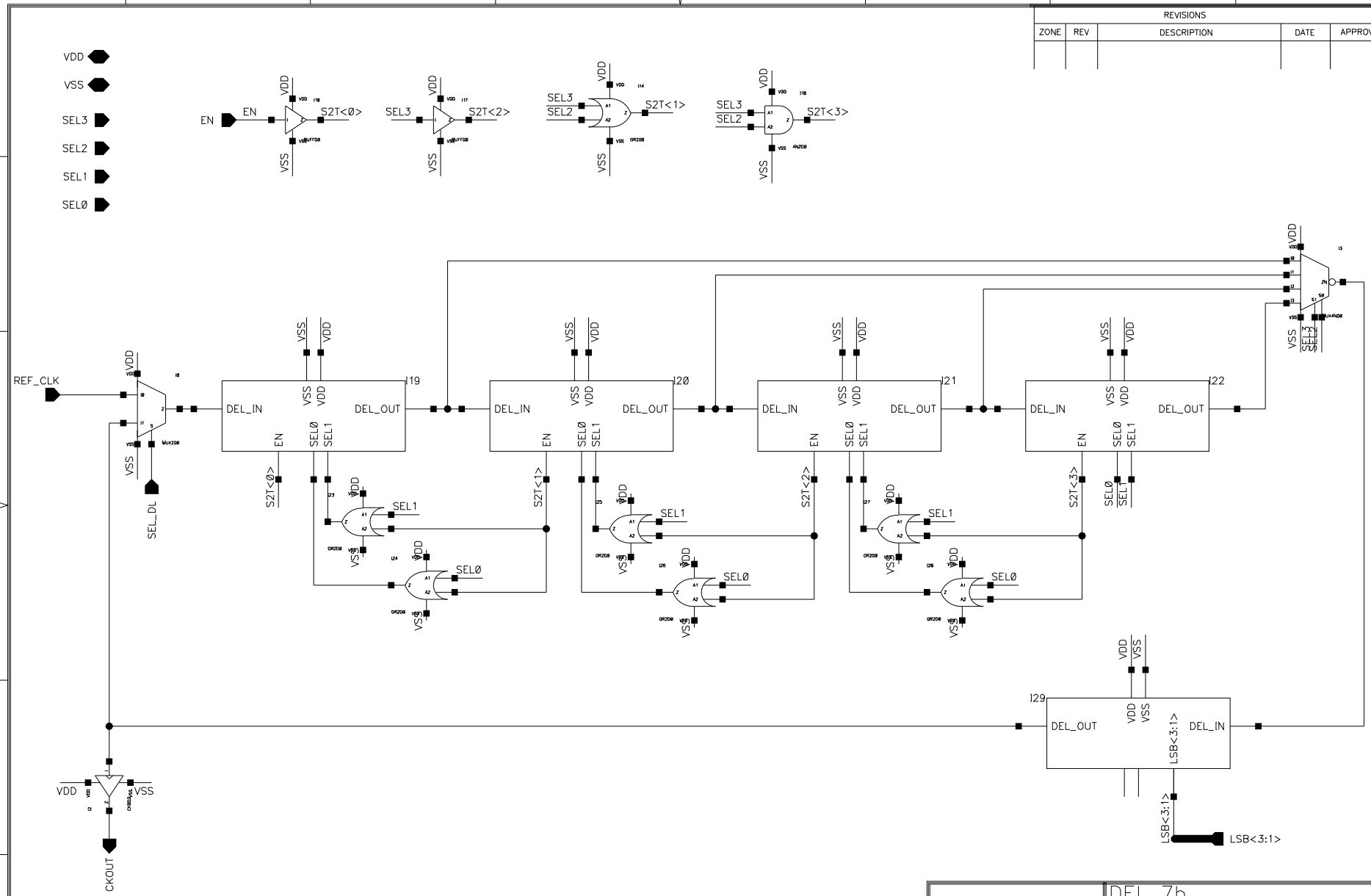

REVISIONS				
ZONE	REV	DESCRIPTION	DATE	APPROVED

	DEL_7b			
Mar 14 22:26:53 2019				
DRAWN				
CHECKED	SIZE A3	FSCM NO.	DWG NO.	REV
ISSUED	SCALE			SHEET OF