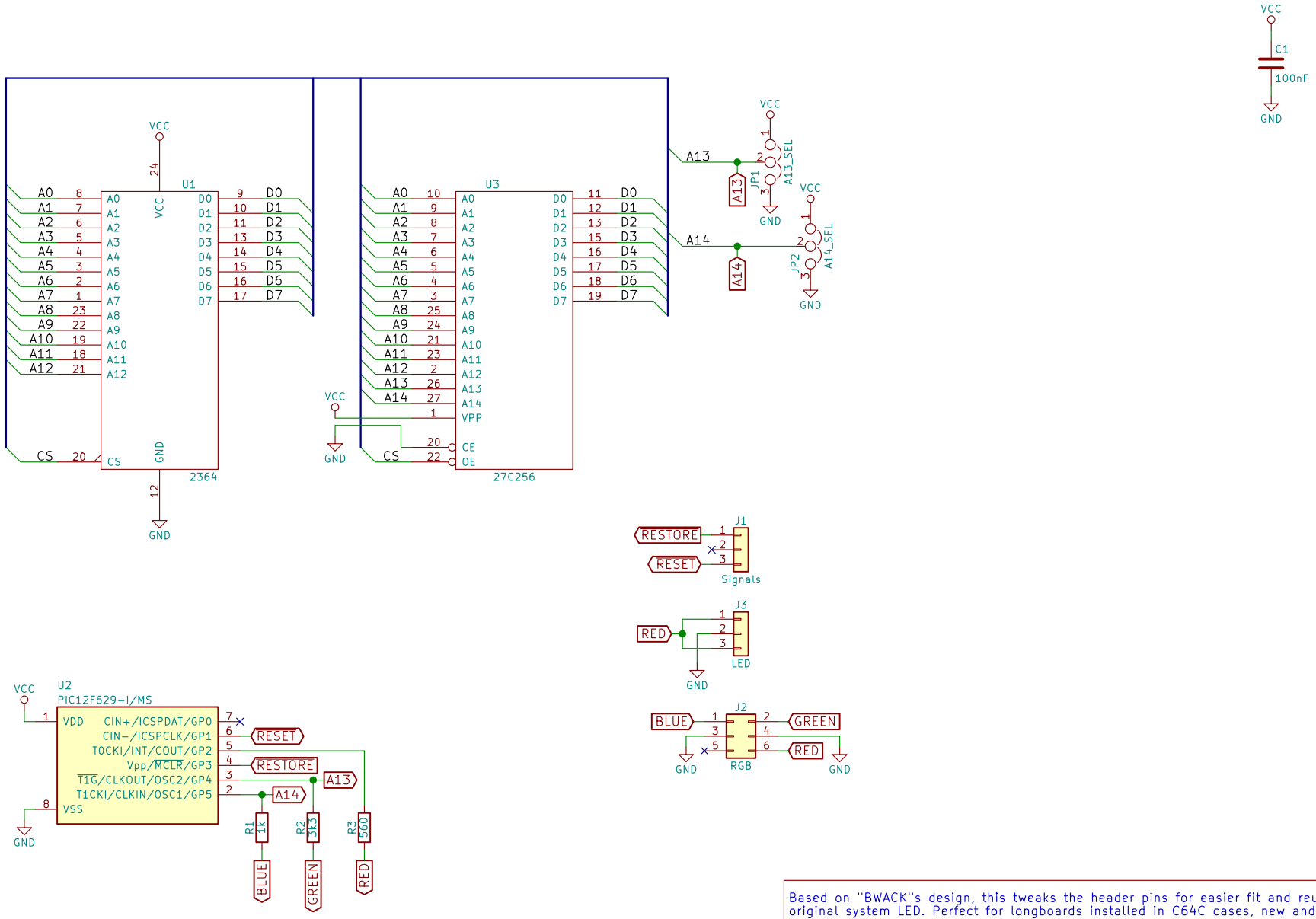

Based on "BWACK"s design, this tweaks the header pins for easier fit and reuse of the original system LED. Perfect for longboards installed in C64C cases, new and old!

Sheet: /
File: C64 Kernal Switcher.sch

Title: Quad kernal switcher for "Longboard"

Size: A4	Date: 27/06-2019	Rev:
KiCad E.D.A. kicad 4.0.7		Id: 1/1