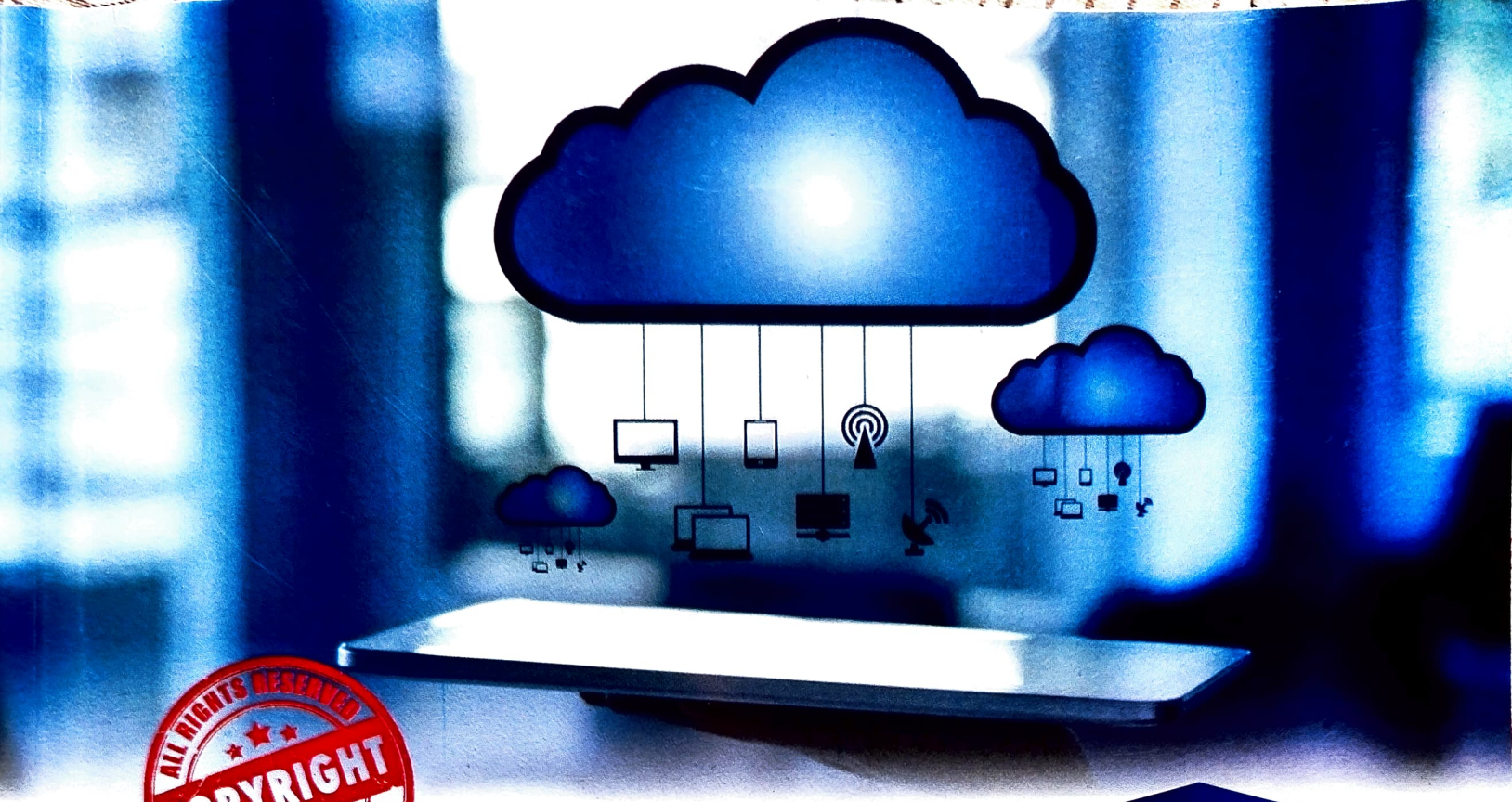

ALL RIGHTS RESERVED
COPYRIGHT
ALL RIGHTS RESERVED

New Syllabus
SPPU

As per the New Credit System Syllabus (2019 Course) of
Savitribai Phule Pune University w.e.f. academic year 2022-2023

Mobile Computing

(Code : 404191(E)) (Elective V)

Semester VIII
Electronics and Telecommunication Engineering

J. S. Katre **Vaishali S. Joshi**

TechKnowledge™
Publications

Table of Contents

Unit I

Chapter 1 : Introduction to Mobile Computing 1-1 to 1-50

Syllabus : Applications of mobile computing, Generations of mobile communication technologies, Multiplexing, Spread spectrum, **MAC protocols** : SDMA, TDMA, FDMA and CDMA.

1.1 Introduction to Mobile Computing 1-2
1.1.1 Various Parts of Mobile Computing 1-2
1.1.2 Advantages of Mobile Computing 1-2
1.1.3 Limitations of Mobile Computing 1-3
1.2 Constraints on Mobile Computing 1-3
1.3 Applications of Mobile Computing 1-4
1.4 A Short History of Wireless Communication 1-5
1.5 Wireless Network Generations 1-7
1.5.1 Classification of Wireless Generations 1-7
1.6 First Generation Wireless Networks 1-7
1.6.1 Features of First Generation 1-8
1.6.2 Drawbacks of 1G System 1-8
1.7 Second Generation Networks 1-8
1.7.1 Types of 2G Standards 1-8
1.7.2 Features of TDMA Standard 1-9
1.7.3 Graphical Comparison of 1G and 2G 1-9
1.7.4 Technical Specifications of 2G 1-10
1.7.5 Features of 2G Systems 1-11
1.8 Evolution From 2G to 2.5G Networks 1-11
1.8.1 Evolution for 2.5G TDMA Standards 1-12
1.8.1.1 HSCSD for 2.5G GSM 1-12
1.8.1.2 GPRS for 2.5G GSM and IS-136 1-13
1.8.1.3 EDGE for 2.5G GSM and IS-136 1-14
1.8.2 IS-95B for 2.5G CDMA 1-15
1.9 Third Generation (3G) Networks 1-16
1.9.1 Features of Third Generation 1-16
1.9.2 Services Provided by 3G Systems 1-16
1.9.3 Advantages of 3G Networks 1-17
1.10 Fourth Generation (4G) Networks 1-17
1.10.1 Features of 4G Systems 1-18
1.10.2 4G (LTE) Network Structure (Architecture) 1-18
1.10.3 Specifications of 4G LTE 1-19
1.10.4 Advantages of 4G 1-20
1.10.5 Disadvantages of 4G 1-20
1.10.6 Applications of 4G 1-20
1.11 Multiplexing and Demultiplexing 1-20
1.11.1 Multiplexing Techniques 1-21
1.12 Frequency Division Multiplexing (FDM) 1-21
1.12.1 Advantages of FDM 1-22
1.12.2 Disadvantages of FDM 1-22
1.12.3 Applications of FDM 1-22
1.13 Time Division Multiplexing (TDM) 1-22
1.13.1 Advantages of TDM 1-23
1.13.2 Disadvantages of TDM 1-23
1.13.3 Applications of TDM 1-23
1.14 Spread-Spectrum Multiple Access (SSMA) 1-23
1.15 Spread Spectrum Technologies 1-25
1.15.1 Frequency Hopping Spread Spectrum (FH-SS) 1-25
1.15.2 Direct Sequence Spread Spectrum (DS-SS) 1-25
1.16 Direct Sequence Spread Spectrum (DS-SS) System 1-26
1.16.1 Advantages and Disadvantages of the DS-SS System 1-27
1.16.2 Applications of DS-SS System 1-27
1.17 Frequency Hop Spread Spectrum (FH-SS) Multiple Access 1-27
1.17.1 Operation of FH-SS 1-28
1.17.2 Types of Frequency Hopping 1-29
1.17.3 Advantages and Disadvantages of FH-SS System 1-29
1.17.4 Applications of FHSS 1-29
1.18 Medium Access Control (MAC) 1-29

Early AM Wireless Lys.

1.19 Motivation for a Specialized MAC 1-30
1.19.1 Hidden Terminal Problem 1-30
1.19.2 Exposed Terminal Problem 1-31
1.19.3 Near and Far Terminals 1-31
1.20 Multiple Access Protocols 1-32
1.20.1 Multiple Access Techniques 1-32
1.21 Space Division Multiple Access (SDMA) 1-33
1.21.1 Features of SDMA 1-34
1.21.2 Applications of SDMA 1-34
1.22 Frequency Division Multiple Access (FDMA) 1-34
1.22.1 FDM and FDD 1-34
1.22.2 Features of FDMA 1-35
1.22.3 Nonlinear Effects in FDMA 1-35
1.22.4 Merits of FDMA 1-36
1.22.5 Demerits of FDMA 1-36
1.23 Time Division Multiple Access (TDMA) 1-36
1.23.1 TDMA and MAC 1-37
1.23.2 Fixed TDM 1-38
1.23.3 Classical Aloha 1-39
1.23.4 Slotted Aloha 1-39
1.23.5 Carrier Sense Multiple Access (CSMA) 1-39
1.23.6 Demand Assigned Multiple Access (DAMA) 1-40
1.23.7 Packet Reservation Multiple Access (PRMA) 1-41
1.23.8 Reservation TDMA 1-42
1.23.9 Multiple Access with Collision Avoidance (MACA) 1-42
1.23.10 Polling 1-43
1.23.11 Inhibit Sense Multiple Access (ISMA) 1-44
1.23.12 Problems with FDMA and TDMA 1-44
1.24 Code Division Multiple Access (CDMA) 1-44
1.24.1 Salient Features of CDMA Systems 1-46
1.24.2 Advantages of CDMA 1-47
1.24.3 Disadvantages of CDMA 1-47
1.24.4 CDMA Applications 1-47
1.24.5 Spread Aloha Multiple Access (SAMA) 1-47
1.24.6 Comparison of Multiple Access Strategies 1-48
• **Review Questions** 1-49

Unit II

Chapter 2 : Mobile Telecommunication Systems 2-1 to 2-56

Syllabus : Introduction to cellular systems, GSM architecture, Protocols, Connection establishment, Frequency allocation, Routing, Mobility Management, Security, **GPRS and UMTS :** Architecture, Handover, Security.

2.1 Wireless Communication 2-2
2.1.1 Need of Wireless Communication 2-2
2.1.2 Wireless Communication Systems 2-2
2.1.3 Important Definitions 2-3
2.2 Cellular Concept 2-4
2.2.1 Basic Cellular System 2-5
2.2.2 Structure of Cellular Phone System 2-6
2.2.3 Advantages of Cellular Concept 2-7
2.2.4 Hexagonal Cell Geometry 2-7
2.3 Frequency Reuse 2-8
2.3.1 Advantages of Frequency Reuse 2-9
2.3.2 Frequency Reuse Schemes 2-9
2.4 Handoff / Handover 2-9
2.4.1 Handoff Strategies 2-10
2.4.2 Dwell Time 2-11
2.4.3 Different Types of Handoffs 2-11
2.5 Global System for Mobile (GSM) 2-12
2.6 GSM System Architecture 2-13
2.6.1 Detail Architecture of GSM 2-14
2.6.2 Various Subsystems in GSM 2-15
2.6.2.1 MS (Mobile Station) 2-15
2.6.2.2 BSS (Base Station Subsystem) 2-15

2.6.2.3 NSS (Network Switching Subsystem) 2-16

2.6.3 OMSS : Operation and Maintenance Subsystem 2-18

2.6.4 Characteristics / Features of GSM Standard 2-18

2.7 Frequency Allocation in GSM 2-19

2.7.1 Type of Multiple Access 2-20

2.7.2 GSM Specifications / GSM Air Interface 2-21

2.8 GSM Signalling Protocol Architecture 2-22

2.8.1 GSM Interfaces 2-22

2.8.2 Mobile Station-Base Transceiver Station Signaling Protocols 2-22

2.8.3 Abis Interface / Base Transceiver Station (BTS)-Base Station Controller (BSC) Signaling Protocols 2-24

2.8.4 A Interface / Base Station Controller (BSC) - Mobile Switching Centre (MSC) Signaling Protocols 2-24

2.9 Signal Processing in GSM 2-24

2.9.1 Call Routing 2-26

2.10 Call Establishment in GSM 2-27

2.11 Handover in GSM 2-29

2.11.1 Types of Handover in GSM 2-29

2.12 Security in GSM 2-30

2.12.1 Access Control and Authentication 2-30

2.12.2 Confidentiality 2-31

2.12.3 Anonymity 2-31

2.12.4 Authentication in GSM 2-31

2.12.5 Authentication Algorithm A_3 2-32

2.12.6 Data Encryption Process using A_5 and A_8 Algorithm 2-32

2.13 GSM Services 2-33

2.13.1 Teleservices 2-33

2.13.2 Data Services 2-34

2.13.3 Bearer Services 2-34

2.13.4 Supplementary Services 2-35

2.14 Mobility Management in GSM 2-35

2.14.1 GSM Location Management 2-35

2.14.2 Basic Location Update Procedure 2-35

2.14.3 GSM Transaction Management 2-37

2.14.4 Advantages of GSM 2-38

2.14.5 Disadvantages of GSM 2-39

2.14.6 Applications of GSM 2-39

2.15 GPRS (General Packet Radio Service) 2-39

2.15.1 Features of GPRS 2-40

2.15.2 GPRS Architecture 2-40

2.15.3 GPRS Radio Interface 2-41

2.15.4 GPRS Frame Structure and Channel Coding 2-42

2.15.5 GPRS Transmission Management 2-43

2.15.6 GPRS Protocol Stack / GPRS Protocol Reference Model 2-43

2.15.7 GPRS Services 2-44

2.15.8 Characteristics of GPRS 2-44

2.15.9 Advantages of GPRS 2-44

2.15.10 Disadvantages of GPRS 2-45

2.15.11 Applications of GPRS 2-45

2.15.12 Comparison of GSM and GPRS 2-45

2.16 Universal Mobile Telecommunication Service (UMTS) or W-CDMA 2-45

2.16.1 Features of UMTS 2-46

2.16.2 UMTS Releases and Standards 2-46

2.16.3 Features of UMTS Standards 2-46

2.16.4 Services Provided by 3G Systems / UMTS 2-47

2.17 UMTS Architecture 2-47

2.17.1 UMTS Domain and Interfaces 2-47

2.17.2 UTRA-Network (UTRAN) Architecture 2-48

2.17.3 User Equipment (UE) 2-50

2.17.4 Core Network of UMTS (UMTS Network Architecture) 2-50

2.17.5 UMTS Interfaces 2-50
2.17.6 UMTS Specifications / UMTS Air Interface Specifications 2-51
2.18 Handover / Handoff in UMTS 2-51
2.18.1 Soft handover 2-51
2.18.2 Hard Handover 2-52
2.18.3 Types of Handover in UMTS 2-53
2.19 UMTS Security Process 2-54
2.19.1 Advantages of UMTS 2-55
2.19.2 Disadvantages of UMTS 2-55
2.19.3 UMTS Applications 2-55
2.19.4 Comparison of UMTS and GSM 2-55
- **Review Questions 2-55**

Unit II

Chapter 3 : Introduction to 5G 3-1 to 3-16

Syllabus : Introduction, 5G network architecture, Applications, 5G enabled technologies, Recent trends in Telecommunication industries.

3.1 5G and Above Wireless Networks 3-2
3.1.1 Why 5G ? 3-2
3.1.2 Features of 5G 3-2
3.1.3 Specifications of Fifth Generation 3-2
3.1.4 Expectations in 5G Network 3-2
3.1.5 Difference Between 4G and 5G 3-3
3.2 Functional Architecture of 5G 3-4
3.2.1 Open Wireless Architecture of 5G Protocol Stack 3-4
3.3 5G Enabled Technologies 3-5
3.3.1 Small Cell Concept 3-5
3.3.2 Massive MIMO 3-7
3.3.3 Beamforming 3-8
3.3.4 Millimeter Waves 3-10
3.3.5 NOMA 3-11
3.4 Characteristics of 5G 3-14
3.4.1 Advantages of 5G Technology 3-14
3.4.2 Disadvantages of 5G Technology 3-14
3.4.3 Applications of 5G Technology 3-14
3.5 Recent Trends in Telecommunication Industries 3-14
3.6 Comparison of Various Mobile System Generations 3-15
- **Review Questions 3-16**

Unit III

Chapter 4 : Network Layer 4-1 to 4-34

Syllabus : Mobile IP, DHCP, Adhoc, **Proactive protocol :** DSDV, **Reactive Routing Protocols :** DSR, AODV. **Hybrid routing :** ZRP, **Multicast Routing :** ODMRP, Vehicular Adhoc networks (VANET). **MANET versus VANET :** Security.

4.1 Mobile IP 4-2
4.1.1 Goals, Assumptions and Requirements 4-2
4.2 IPv6 (Next Generation IP) 4-2
4.2.1 Advantages of IPv6 4-2
4.2.2 IPv6 in Mobile Computing 4-3
4.3 Host Configuration : DHCP 4-4
4.3.1 Previously used Protocols 4-4
4.3.2 DHCP 4-4
4.3.3 Advantages of DHCP 4-5
4.3.4 Components of DHCP 4-5
4.3.5 DHCP Operation 4-6
4.4 Introduction to Wireless Network 4-6
4.4.1 Classification of Wireless Networks 4-7
4.4.2 Infrastructure Networks 4-7
4.4.3 Infrastructure Less Networks / Adhoc Networks 4-8
4.5 Issues and Challenges in Adhoc Networks 4-9
4.5.1 Routing Protocols 4-9
4.5.2 Multicasting 4-10
4.6 Routing in Adhoc Network 4-11
4.6.1 Design Issues / Challenges in Routing Protocol 4-11

Unit I

Chapter 1

Introduction to Mobile Computing

Syllabus

Applications of mobile computing, Generations of mobile communication technologies, Multiplexing, Spread spectrum, **MAC protocols :** SDMA, TDMA, FDMA and CDMA.

Chapter Contents

1.1	Introduction to Mobile Computing	1.13	Time Division Multiplexing (TDM)
1.2	Constraints on Mobile Computing	1.14	Spread-Spectrum Multiple Access (SSMA)
1.3	Applications of Mobile Computing	1.15	Spread Spectrum Technologies
1.4	A Short History of Wireless Communication	1.16	Direct Sequence Spread Spectrum (DS-SS) System
1.5	Wireless Network Generations	1.17	Frequency Hop Spread Spectrum (FH-SS) Multiple Access
1.6	First Generation Wireless Networks	1.18	Medium Access Control (MAC)
1.7	Second Generation Networks	1.19	Motivation for a Specialized MAC
1.8	Evolution From 2G to 2.5G Networks	1.20	Multiple Access Protocols
1.9	Third Generation (3G) Networks	1.21	Space Division Multiple Access (SDMA)
1.10	Fourth Generation (4G) Networks	1.22	Frequency Division Multiple Access (FDMA)
1.11	Multiplexing and Demultiplexing	1.23	Time Division Multiple Access (TDMA)
1.12	Frequency Division Multiplexing (FDM)	1.24	Code Division Multiple Access (CDMA)

1.1 Introduction to Mobile Computing :

Definition :

- Mobile computing is defined as a technical field that covers the design, development and evaluation of mobile applications with the help of appropriate solutions that meet user requirements.
- This includes learning the technology that is used to perform a various tasks on the portable devices.
- Examples of portable devices are smart phones, tablets, laptops, wearable devices, vehicles etc.
- Mobile computing has applications in the following areas :
  1. Business and consumer markets.
  2. Industrial and entertainment industries.
  3. Many specialized vertical markets.
- Even though the desktop computers have better hardware configuration capabilities and computational performance, the majority of end users prefer mobile devices.
- The main advantage of mobile computing is user's convenience, because users get access to information and computational resources anytime and anywhere.

Why is mobile computing used ?

- Mobile computing is used in both in business and by consumers in day to day life.
- It allows users to be away from a power source for periods of time.
- This allows the traveling workers to stay connected to their work while on the move.
- Consumers use mobile computing in different ways as follows :
  1. Internet access.
  2. Mobile communications.
  3. Web browsing.
  4. Mobile applications.
  5. Entertainment streaming media.

1.1.1 Various Parts of Mobile Computing :

- Mobile computing system consists of infrastructure, hardware and software technology.
- Different parts of mobile computing are as follows :
  1. Mobile infrastructure.
  2. Mobile hardware.
  3. Mobile software.

1. Mobile infrastructure :

- Infrastructure is defined as the technical pieces that allow devices to communicate. Mobile infrastructure consists of the wireless networks, wireless protocols and data formats.

2. Mobile hardware :

- The mobile hardware includes the physical mobile device and supporting hardware that users interact with.
- Mobile hardware may include cell phones, laptops, tablets, wearable computers, chargers and other accessories.

3. Mobile software :

- Mobile software is defined as the applications that run on mobile devices, including mobile operating systems (OS) and user-facing applications, such as mobile browsers and e-commerce applications.

1.1.2 Advantages of Mobile Computing :

- The advantages of mobile computing are as given below :

1. Portability :

- Mobile devices are smaller and more portable which makes them easy to carry and use.
- They work away from a power source and without a physical network connection.

2. **Affordability :**

- Over time, mobile devices have become less expensive compared to the desktop PC. They are easier to obtain too.
- Therefore, people have increasingly started opting for smart phones and tablets as their primary means of online connectivity.
- Therefore, mobile computing has become affordable.

3. **Wireless communications :**

- Mobile computing uses wireless communication to communicate among its users.
- This allows the mobile users to engage in phone, video and various text and instant messaging applications.

4. **Data collection :**

- Mobile computing enables companies to collect large consumer data than was possible with traditional computing.

1.1.3 Limitations of Mobile Computing :

- Some of the major limitations of mobile computing are as follows :

1. **Less power :**

- In recent days the battery life has increased substantially. Still power consumption continues to be an issue, and we need to charge mobile devices regularly.

2. **Poor connectivity :**

- Due to wireless communication, there are areas where signal strength is poor or nonexistent.

3. **Data security :**

- In mobile computing the data security is poor due to wireless communication.
- This is a grave problem because business users, especially, may have sensitive data on their devices while traveling or working remotely.
- Companies must implement security measures and policies to secure corporate data.

4. **Dependence :**

- The consumers may become overly reliant on the mobile devices, which can lead to compulsive or unhealthy behaviors such as smart phone addiction.

5. **Distraction :**

- Mobile devices can be distracting and potentially dangerous in a hazardous work environment that requires the employee's attention, such as a construction site.
- They also pose dangers if used inappropriately while driving.

1.2 Constraints on Mobile Computing :

- Mobile computing is characterized by following four major constraints :
  1. Mobile device constraints.
  2. Network constraints.
  3. Mobility constraints.
  4. Power constraints.

1. **Mobile device constraints :**

- The small sized mobile devices have limited resources such as processor speed, storage space, display size and screen resolution.
- Therefore, mobile application designers have a great challenge on how to overcome these constraints in order to satisfy requirements of fast user interactive mobile computing environment.
- It is also necessary to address the power limitations of mobile devices in terms of what an application should do with a very limited power to use.

2. **Network constraints :**

- It is well known that wireless networks are less reliable as compared to their wired counterparts.
- Wireless networks have a limited bandwidth, high latency (delay) and frequent disconnection due to different reasons like power limitations, available spectrum and mobility.

- The most critical problem of these is the bandwidth.
- With increase in bandwidth, power consumption also increases which shorten the battery life of mobile devices.
- Even though the wireless connections deliver a stable high bandwidth, energy restrictions of mobile devices will limit the effectiveness of data throughput.
- Therefore, it is necessary to design data access technique for users to overcome these limitations.

3. **Mobility constraints :**

   I. **Mobile elements are resource-poor :**

   - Mobile elements will always be resource poor as compared to static elements.
   - They have lower processor speed, smaller memory size and lower disc capacity.

   II. **Mobility is inherently hazardous :**

   - Portable mobile devices can be easily stolen, they have security concerns, and are more vulnerable to loss or damage.

   III. **Mobile connectivity is highly variable :**

   - Mobile connections are highly variable in terms of reliability.
   - In some buildings the wireless connectivity may be reliable and high-bandwidth while in others there may be only low-bandwidth connectivity.
   - The outdoor mobile client may have to rely on a low-bandwidth wireless network with gaps in coverage.

4. **Power constraint :**

   - As mobile elements depend on finite energy source, it is necessary to be sensitive to power consumption.

1.3 Applications of Mobile Computing :

- The following is a list of some of the most important application areas of mobile computing :

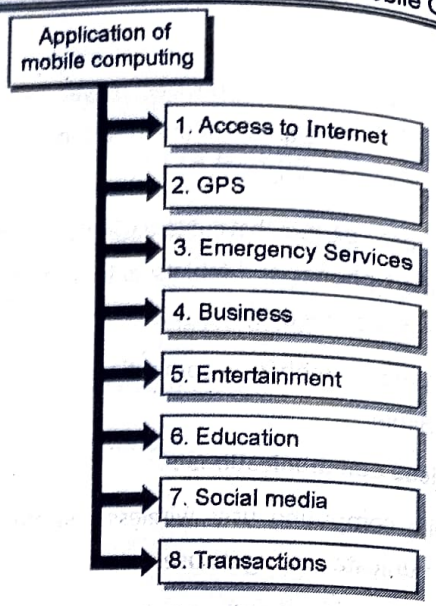

(G-3045) **Fig. 1.3.1 : Applications of mobile computing**

1. **Access to the web or the Internet :**

- Sales professionals who need to travel frequently require instant access to the company's database to keep them updated about the company's current state.
- This needs an internet connection while travelling.
- With wireless access, the laptop gets converted to a mobile office and efficient synchronization mechanism ensures data consistency.

2. **GPS (Global Positioning System) :**

- Mobile computing is also used in the GPS system for navigation of vehicles, for finding a location etc.
- The GPS program provides critical capabilities to military, civil and commercial users around the world.
- In addition, GPS is the backbone for modernizing the global air traffic system, weather, and location services.

3. **Emergency services :**

- The ability to send and receive information on the move is very important where the emergency services are involved.
- Mobile computing can be used to dispatch information quickly, regarding the address, type and other details of an incident, to one or several appropriate mobile units which are in the vicinity of the incident.

- We can use emergency services for calling an ambulance, fire stations or police.

4. **Business :**

- Managers can use mobile computers in, say, critical presentations to major customers. They can access the latest market share information using mobile computing.
- They can also communicate with the office about possible new offers and call meetings for discussing responds to the new proposals.

5. **Services related to entertainment :**

- Mobile computing can provide updated information about anything at an appropriate location.
- For example, a travel guide might provide information about the history of a building through GPS, local base station contact or triangulation.
- It may also provide information about evening concert that is to be held in the building.
- We can also use mobile computing for booking tickets for movies, plays, concerts etc.
- It is also possible to watch live cricket or football and other matches or Olympic games etc on a mobile smart phone.
- Mobile computing can also be used for watching movies, listening music and gaming applications.

6. **Educational programs :**

- Mobile computing can be used for educational programs such as live interactive virtual classroom teaching, correspondence courses, workshops, webinars etc.

7. **Social media live interactions :**

- Some mobile applications allows user to keep in touch with their friends and relatives by sending messages, images, audio and video clips.

8. **Transactions :**

- Some mobile applications allow the facility of transaction such as recharge mobile, pay bills etc.

1.4 A Short History of Wireless Communication :

- Wired communication existed long before the existence of wireless communication.
- However, **Marconi** (1874-1937) is the name, which is most closely connected with the success of wireless communication.
- Marconi first demonstrated the wireless telegraphy in 1895 using long wave transmission with a transmission power higher than 200 kW.
- The first transatlantic transmission was successful in 1901 and in 1907, the first commercial transatlantic connections were set up.
- Reginald A. Fessenden (1866-1932) is to be credited for the first radio broadcast that took place in 1906 which transmitted voice and music for Christmas.
- In 1915, the first wireless voice transmission was set up between New York and San Francisco while the first commercial radio station started in 1920.
- A little earlier to this one of the first 'mobile' transmitters was on board in 1911.
- The first telephone in a train was available on the Berlin-Hamburg line by 1926 and in 1927, the first car radio was commercially available.
- In 1928, many field trials for television broadcasting were conducted.
- John L. Baird (1888-1946) transmitted TV across the Atlantic and demonstrated color TV.
- Up until then, Amplitude Modulation (AM) was being used in all wireless communication equipment.
- A big step forward in this respect came in 1933 when Edwin H. Armstrong invented frequency modulation.
- Many national and international wireless communications projects were triggered off after the Second World War.
- The first network in Germany (analog A-Netz) was set up in 1958, using a carrier frequency of 160 MHz.

However in this network setup it was only possible to make connection from the mobile station.

Handovers were not possible but changing of the base station, was possible.

- This system had 80 per cent coverage and 11,000 customers in 1971.
- Then in 1972 the advanced version of the earlier system (B-Netz) arrived in Germany, using the same 160 MHz frequency band.
- At the same time, the northern European countries including Denmark, Finland, Norway, and Sweden agreed upon the analog Nordic Mobile Telephone **(NMT)** system.
- This was a system with 450 MHz carrier and is still available system for mobile communication in some very remote places.
- The next version of NMT at 900 MHz followed in 1986.
- In 1982, the European countries decided to develop a pan-European mobile phone standard.
- Then in 1983 the US first generation mobile phone system called Advanced Mobile Phone System **(AMPS)** came into existence.
- AMPS is the first generation analog mobile system working at 850 MHz, only for voice transmission.
- In 1984, the home telephones went wireless with the standard CT1 (Cordless Telephone).
- The digital systems were not yet available. Therefore, more analog standards such as the German C-Netz at 450 MHz with analog voice transmission arrived in the market.
- In these systems the hand-over between 'cells' was possible.
- The early 1990s saw the beginning of fully digital systems. The analog wireless network was switched off in 2000.
- ETSI adopted the standard Digital European Cordless Telephone (DECT) for digital cordless telephony in 1991.
- In 1991 only, after many years of discussions and field trials, the second generation wireless standard GSM was standardized.
- This is known as the first version of GSM (Global System for Mobile Communication) which works at 900 MHz and uses 124 full-duplex channels.
- However very soon it was discovered that the analog AMPS and the digital GSM are not sufficient to offer services to the high user densities in cities.
- On the other front of wireless networks, the wireless LAN standard 802.11 came out as a winner in 1997.
- The IEEE 802.11 standard works at the license-free Industrial, Science, Medical (ISM) band at 2.4 GHz and infra red frequencies and offered data speed of 2 Mbit/s in the beginning and 10 Mbps later on.
- The year 1998 marked the beginning of mobile communication using satellites with the help of the Iridium system.
- In 1998 the European countries agreed on the Universal Mobile Telecommunications System (UMTS) as the European proposal for the IMT-2000 proposed by International Telecommunication Union (ITU).
- These are the third generation mobile telephone standards.
- The IMT-2000 recommendations are important because they define a common, worldwide framework for future mobile communication at a frequency of 2 GHz (ITU, 2002).
- In 1999 several more powerful WLAN standards were introduced in the market.
- The year 2000, the systems such HSCSD, GPRS with higher data rates and packet-oriented transmission for GSM were launched.
- The digital TV via satellite existed for several years. However, in 2002 the digital terrestrial TV (DVB-T) started as regular service in Berlin.
- This system ensures a high quality TV reception while moving and requires a very small antenna.

- After third generation, came the fourth generation of the wireless networks and now we are about to receive the services of the fifth generation of wireless communication.

1.5 Wireless Network Generations :

- The cellular systems are classified into different evolutionary generations from first generation (1G) to fifth generation (5G).
- The **first generation wireless networks** are based on analog technology and they are used only for analog voice services.
- The **second generation wireless systems (2G)** employ digital modulation and advanced call processing capabilities.
- Typical examples include Global System for Mobile (GSM), Cordless telephone (CT2) etc.
- The **third generation wireless systems (3G)** are developed to provide universal access throughout the world.
- They have used broadband ISDN to provide access to information networks like internet, communications using Voice Over Internet Protocol (VoIP), voice-activated calls etc.
- The **fourth generation wireless systems (4G)** are currently under deployment but continue to evolve.
- The next generation cellular networks have been designed to support high speed data communications traffic in addition to the voice calls.
- The new technologies and standards are being implemented so that the wireless networks can replace the fiber optic or copper cables.
- The wireless networks are used as replacement for wires within offices, buildings, homes with the use of Wireless Local Area Networks **(WLANs).**
- The **Bluetooth** modem standard can connect several devices with invisible wireless connections within a person's personal workspace.
- It was conceived as a wireless alternative to RS232 cables.
- WLANs and Bluetooth use low power levels. They don't need a license for spectrum use.
- They are used for adhoc wireless communication of voice and data anywhere in the world.
- The cellular systems are classified into three different evolution of generations.

1.5.1 Classification of Wireless Generations :

- Fig 1.5.1 shows classification of wireless network generations.

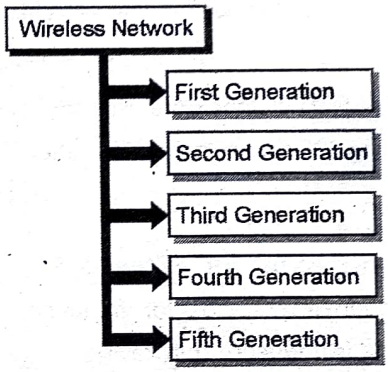

(G-3046) Fig. 1.5.1 : Classification of wireless network generations

1.6 First Generation Wireless Networks :

- The first generation of cellular telephony was suitable only for voice communication using analog signals.
- Now cellular technology is in the fourth generation.
- One of the important first generation mobile system used in North America is AMPS.
- The first generation of wireless mobile system was implemented in 1980's.
- The modulation scheme used was Frequency Modulation (FM). Long form of AMPS is Advanced Mobile Phone System.
- It is one of the leading analog cellular system in North America.
- It makes use of FDMA (Frequency Division Multiple Access) to separate channels in a link.

Frequency bands :

- AMPS uses the ISM 800-MHz band for its operation.
- It uses two separate channels for forward i.e. base station to mobile station and for reverse i.e. from mobile station to base station communication.
- The frequency bands allotted for the forward and reverse communication are as follows :

  Reverse Communication : 824 MHz to 849 MHz.

  Forward Communication : 869 MHz to 894 MHz.
- Each band has been divided into 832 channels. But two providers are allowed to share an area. That each provider is allowed to use 416 channels in each cell.
- Out of 416, 21 channels are used for control and the remaining 395 channels for information.

Transmission :

- AMPS makes use of FSK and FM systems for modulation. FM stands for frequency modulation while FSK is frequency shift keying.
- FM is used for the modulation of voice signals whereas FSK is used for the control channels.
- The coverage area of first generation systems was 2100 square km.
- The other 1G technologies developed to provide only analog voice communication were Nordic Mobile Telephone (NMT) and Total Access Communication System (TACS).
- 1G technology was developed only for providing the voice communication but **paging networks** also are considered as 1G technology.
- Pager system provides only one way messaging.

1.6.1 Features of First Generation :

Table 1.6.1 : Features of First Generation

Sr. No.	Feature	Value / Description
1.	Generation	1G (1970 - 1984)
2.	Technology	Analog cellular
3.	Standard	AMPS
4.	Switching	Circuit switching
5.	Frequency band	824-894 MHz
6.	Modulation	FM
7.	Data speed	2.4 kbps
8.	Multiplexing	FDMA
9.	Core network	PSTN
10.	Service	Only voice or only message

1.6.2 Drawbacks of 1G System :

1. Poor voice quality.
2. No security.

1.7 Second Generation Networks :

- The second generation of cellular telephony was developed in order to improve the quality of communication.
- The second generation was designed for digital voice.
- 2G networks began to emerge around 1980's but their actual implementation started by 1990's.
- The second generation (2G) cellular systems provide more features as compared to the first generation (1G) systems.
- As stated earlier, the first generation cellular systems were based on analog transmission of voice on FDMA / FDD and analog FM.
- The second generation (2G) cellular systems are based on the digital modulation formats along with the TDMA/FDD and the CDMA/FDD multiple access techniques.
- The second generation mobile systems are digital systems.

1.7.1 Types of 2G Standards :

- Following are some popular second generation standards.
  1. Global System Mobile (GSM).
  2. Interim Standard 136 (IS-136).

3. Pacific Digital Cellular (PDC).
4. Interim Standard 95 CDMA (IS-95).

- Out of these, the first three i.e. GSM, IS-136 and PDC are **TDMA** standard whereas, IS-95 is the **CDMA** standard.
- In the three TDMA standards, time axis is subdivided into many time slots. Each user is allotted its own time slot to transmit its data. These time slots form TDMA frames.
- The cellular traffic congestion is minimized by this technology.

1. Global System Mobile (GSM) Standard :

- Out of all the 2G standards, GSM is the most popular standard. It is a TDMA based standard which uses eight time slots for users with each user assigned a bandwidth of 200 KHz.
- It is deployed in Europe, Asia, Australia, South America and few parts of the U.S. for cellular as well as PCS applications.

2. Interim Standard (IS-136) :

- This standard is also called as North American Digital Cellular (NADC) or US Digital Cellular (USDC).
- It is a TDMA standard which uses three time slots for users with each one assigned a channel bandwidth of 30 MHz.
- It is deployed in Australia, South America and North America for cellular as well as PCS applications.

3. Pacific Digital Cellular (PDC) :

- It is a digital TDMA standard which is used by over 50 million people in Japan.
- It is similar to the IS-136 standard.

4. Interim Standard (IS-95) :

- The interim standard IS-95 is a very popular CDMA based 2G standard which is also called as **cdmaOne**.
- In the CDMA standard (IS-95) every subscriber is assigned an n-bit code and assures a high degree of security than other access methods.
- IS-95 standard does not use TDMA. Hence it allows up to 64 users to transmit simultaneously.
- All these users are coded in an orthogonal manner and they transmit simultaneously over a 1.25 MHz channel.
- It is deployed in Japan, Korea, China, South America and Australia for cellular as well as PCS applications.
- The simultaneous transmission from several users can be differentiated from each other by a unique code word that has been assigned to every subscriber.
- These 2G standards are the first set of digital standards that make use of digital modulation and digital signal processing techniques in their handsets as well as the base stations.
- The handset manufactures are producing handsets, that support both TDMA and CDMA standards for cellular and PCS applications.

1.7.2 Features of TDMA Standard :

- A few important features of the TDMA are :
  1. Operates at faster data rates.
  2. Utilizes the spectrum efficiently.
  3. Needs synchronization for its operation.
  4. It has guard intervals for better operation.
  5. The TDMA standards use half duplex methods.

1.7.3 Graphical Comparison of 1G and 2G :

- A simple comparison with respect to the number of mobile users for the 1G and 2G standards in 2001 is shown in Fig. 1.7.1.

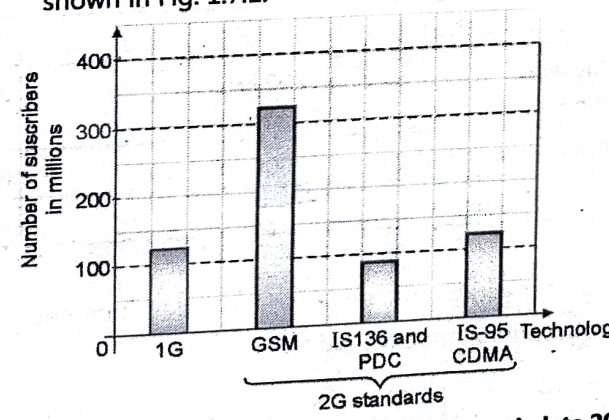

(G-2544) Fig. 1.7.1 : Growth of number of users in late 2001

- The GSM-2G standard had the highest number of users in 2001.

- 2G networks are designed for development of conventional mobile service.
- In-order to provide fixed telephone service to businesses in the developing nations and the residential areas the newer cellular systems are being installed.
- In the countries that have poor telecommunication infrastructure, it is cost effective to provide **Plain Old Telephone Service (POTS)** with the cellular phones.
- Advantage of using 2G network over 1G is that digital encryption of phone conversation is possible.
- With the help of 2G technologies the spectrum efficiency has increased by three folds as compared to 1G technology. With the development in GSM, several countries like Japan and US decided to abandon the IS-136 and PDC standard.

1.7.4 Technical Specifications of 2G :

- Table 1.7.1 gives the technical specifications of GSM, CDMA and IS-136/PDC 2G standards.

Table 1.7.1 : Technical specifications of leading 2G technologies

Sr. No.	Parameter	GSM	IS-136/PDC	IS-95 CDMA
1.	Duplexing	FDD	FDD	FDD
2.	Multiple Access	TDMA	TDMA	CDMA
3.	Uplink frequencies	890-915 MHz (Europe) 1850-1910 MHz (US PCS)	800 MHz, 1500 MHz (Japan) 1850-1910 MHz (US PCS)	824-849 MHz (US cellular) 1850-1910 MHz (US PCS))
4.	Downlink frequencies	935-960 MHz (Europe) 1930-1990 MHz (US PCS)	869-894 MHz (US cellular) 1930-1990 MHz (US PCS) 800 MHz, 1500 MHz (Japan)	869-894 MHz (US Cellular) 1930-1990 MHz (US PCS)
5.	Carrier separation	200 kHz	30 kHz (IS-136) 25 kHz for PDC	1.25 MHz
6.	Voice channels per carrier	8	3	64
7.	Channel Data Rate	270.833 kbps	48.6 kbps (IS-136) 42 kbps for PDC	1.2288 Mchips/sec
8.	Modulation scheme	GMSK	DQPSK	QPSK
9.	Physical channel bandwidth	200 kHz	30 KHz	1.25 MHz
10.	Typical power radiated	1000 / 125 mW	600 / 200 mW	600 mW
11.	Number of users	8	6	20 to 35

- 2G networks are designed for development of conventional mobile service.
- In-order to provide fixed telephone service to businesses in the developing nations and the residential areas the newer cellular systems are being installed.
- In the countries that have poor telecommunication infrastructure, it is cost effective to provide **Plain Old Telephone Service (POTS)** with the cellular phones.
- Advantage of using 2G network over 1G is that digital encryption of phone conversation is possible.

- With the help of 2G technologies the spectrum efficiency has increased by three folds as compared to 1G technology.
- With the development in GSM, several countries like Japan and US decided to abandon the IS-136 and PDC standard.

1.7.5 Features of 2G Systems :

- Some of the important features of the 2G-mobile systems are as follows :

Table 1.7.1 : Features of the 2G-mobile systems

Sr. No.	Feature	Value / Description
1.	Generation	2G (1990)
2.	Technology	Digital Cellular Technology
3.	Standard	CDMA, TDMA and GSM
4.	Switching	Circuit / packet switching
5.	Frequency band	850 - 1900 MHz (GSM)
6.	Data speed	9.6 kbps.
7.	Multiplexing	CDMA, TDMA
8.	Modulation	GMSK
9.	Core network	PSTN
10.	Services	Digital voice, Data and SMS facility
11.	Handoff	Horizontal

Performance :

- Although 2G systems provided a huge improvement over 1G and increased the number of subscribers, the standards of 2G systems were poor.
- This is because, 2G systems were unable to handle complex data and they could not use the available bandwidth efficiently.
- Therefore the 2G standards were upgraded first to 2.5G standards and subsequently to the 3G standards.

1.8 Evolution From 2G to 2.5G Networks :

Why 2.5G ?

- The 2G digital standards were being used widely by wireless carriers for cellular and PCS applications since the 1990s.
- However these standards use circuit-switched data modems that limit the data users to a signal circuit-switched voice channel.
- Hence, in 2G standards, the data transmission rates are generally limited to the data throughout rate of an individual user.
- Each 2G standard specifies a different coding scheme and error protection algorithm for data transmission and voice transmissions.
- All the 2G networks only support single user data rates of the order of 10 kbps.
- Such a low data rate is not sufficient for sending email rapidly and for Internet browsing applications.
- With low data rates, the 2G standards can support limited internet browsing and Short Messaging Service (SMS) with the help of switched circuit method.
- The **Short Messaging Service (SMS)** is a an important feature of GSM.
- The subscribers can send short real time messages to the other subscribers in the same network by dialing the receiver's mobile phone number.
- In order to make the 2G standards support the increased throughput data rate requirement for modern Internet applications, new standards have been developed.
- These new standards are upgraded upon the existing 2G standards and they are called as 2.5G technology.
- They support the higher data rates by allowing the use of existing 2G handsets with some modifications and by using new base station add-ons and subscriber unit software upgrades.
- Hence the 2.5 standards can support for web browsing, e-mail traffic, mobile commerce (m-commerce), and location-based mobile services.
- The 2.5G technologies also support a popular new web browsing format language, called **Wireless Application Protocol (WAP).**

- WAP allows the web pages to be observed in a compressed format because it has been designed for small, portable hand held devices.
- For a specific wireless network the 2.5G upgrade must be compatible with the earlier 2G technology at the base station.
- A wide range of 2.5G standards have been developed in order to upgrade each 2G technology (IS-136, GSM, CDMA) for faster Internet data rates.
- Fig. 1.8.1 shows various upgrade paths for different 2G technologies.

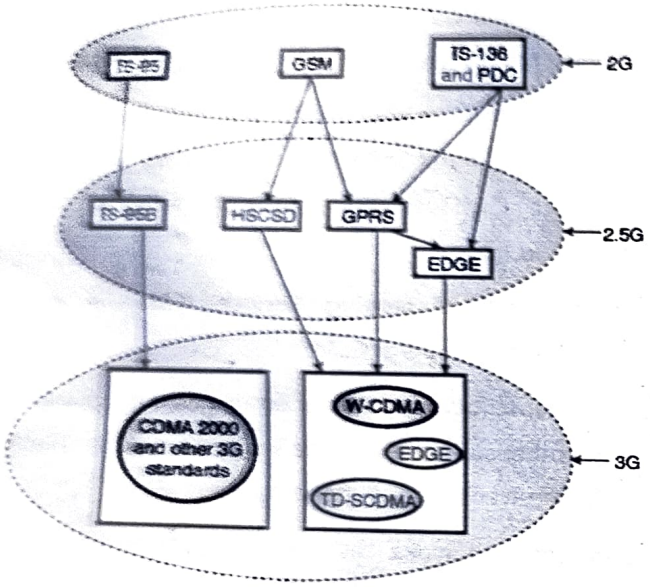

(G-1584) Fig. 1.8.1 : Various upgrade paths for 2G technologies

- In other words it shows how a 2G standard evolves into 2.5G and then into a 3G standard.
- Fig. 1.8.1 shows that CDMA IS-95 evolves into IS-95B as 2.5G standard which further evolved into CDMA 2000 as the 3G standard.
- On the other side the GSM standard evolves into HSCSD and GPRS as 2.5G standards which further evolved into W-CDMA, EDGE or and TD-SCDMA standards as shown.
- Finally IS-136 and PDC standards followed the evolution route of either GPRS--- W-CDMA, EDGE or and TD-SCDMA or GPRS --- EDGE----W-CDMA as shown in Fig. 1.8.1.
- It is necessary to choose an appropriate upgrade path for any 2G standard.
- That means the 2.5 standard corresponding to the GSM standard must have a backward compatibility with the GSM air interface standard.
- This would ensure there is no need of complete change in the base station equipments.
- Hence all the 2.5G standards provide a marginal improvement in the data rates over corresponding 2G standard.

1.8.1 Evolution for 2.5G TDMA Standards :

- The three 2G standards that are based on TDMA technique are : GSM, IS-136 and PDC.
- As shown in Fig. 1.8.2 three different upgrade paths are developed for the GSM, out of which two also support IS-136 and PDC.

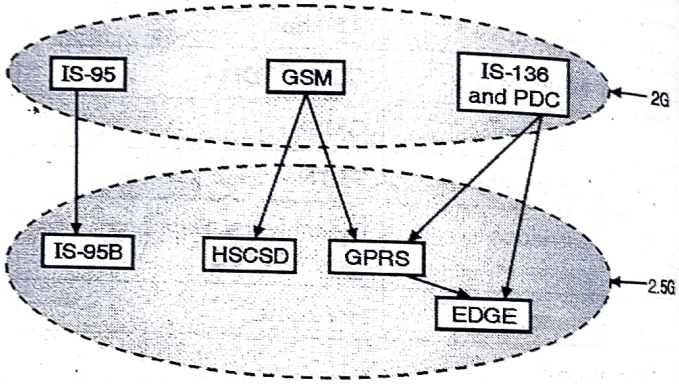

(G-1584(a)) Fig. 1.8.2 : Evolution path for GSM to 2.5G

- Following are the three upgrade solutions for 2G TDMA standards :
  1. High Speed Circuit Switched Data (HSCSD).
  2. General Packer Radio Service (GPRS).
  3. Enhanced Data Rates for GSM Evolution (EDGE)
- These improvements increase the data rates of the 2G standards significantly and also support development of Internet ready cell phones.

1.8.1.1 HSCSD for 2.5G GSM :

Principle :

- HSCSD is a high speed circuit switched data technique.

- It allows a single mobile user to use consecutive time slots in the GSM standard.
- In GSM, one user is allowed to use only one TDMA slot, but in HSCSD a user can use more than one consecutive TOMA slots to improve the data rates.
- This standard relaxes the error control algorithm in GSM to further increase the data rates.
- The amount of increase in data rates depends on the number of consecutive time slots used by a user.
- With four consecutive TDMA slots allotted to a single user the HSCSD can increase the raw data rates up to 57.6 kbps which is a remarkable improvement over 9.6 kbps data rate of GSM.

Implementation :

- HSCSD can be employed if the service provider implements a simple software change at the GSM base station.

Applications :

- HSCSD can be used for :
  1. Dedicated streaming Internet access.
  2. Real time interactive web sessions.

1.8.1.2 GPRS for 2.5G GSM and IS-136 :

- GPRS is a packer based technique which could be the next step in evolution of GSM as well as IS-136 and PDC standards as shown in Fig. 1.8.2.

Principle :

- GPRS operates by supporting a multiple user network sharing of individual channels and time slots.
- This is different than the principle of HSCSD. Due to this technique. GPRS can support many more users than HSCSD but in **a burst manner** (non-continuous manner).
- The GPRS standard provides a packet network on dedicated GSM or IS-136 radio channels.

Air interface :

- The modulation formats specified in the original 2G TDMA standards CGSM and IS-436 are retained in GPRS.
- But it uses a completely redefined air interface (as compared to GSM or IS-136) for better handling of data.
- GPRS has dedicated radio channels and particular time slots that allow an always on access to the network.
- The GPRS subscribers are instructed automatically, to tune to the above mentioned channels and time slots.

Data rates :

- If all the eight time slots of a GSM channel are dedicated to GPRS, it is possible for an individual user to achieve a data rate of 171.2 kbps.
- However these data rates decrease with increase in the number of users trying to use the GPRS network.

Error correction :

- In GPRS the applications are required to provide their own error correction schemes.

GPRS Implementation :

- GPRS implementation was easy because the GSM operator needs to install new routers and gateways for the base station.
- A new software that redefines the base station air interface and time slots, also needs to be installed at standard the base station.
- A new RF base station hardware is also required.

Applications :

- Some important applications of GPRS are :
  1. Non-real time Internet applications.
  2. Retrieval of e-mails, faxes.
- Asymmetric web browsing (more downloading and less uploading).

Table 1.8.1 : Technical features of the emerging 2.5G and 3G data communications standards

Sr. No.	Wireless Data Technology	Generation	Channel Bandwidth	Duplex method	Need of new spectrum	Change in Infrastructure	Need of a new handset
1	HSCSD	2.5G	200 kHz	FDD	No	Needs software upgrade at the base station.	Yes
2.	GPRS	2.5G	200 kHz	FDD	No	Needs new packet overlay in addition to routers and gateways.	Yes
3.	EDGE	2.5G	200 kHz	FDD	No	Needs new transceiver at the base station and software upgrades to base station controller and base station.	Yes
4.	W-CDMA	3G	5 MHz	FDD	Yes	Needs entirely new base stations.	Yes
5.	IS-95B	2.5G	1.25 MHz	FDD	No	Needs new software in base station controller.	Yes
6.	CDMA 2000 1xRTT	3G	1.25 MHz	FDD	No	Needs new software in backbone and new channel cards at base station. They also need to build a new packet service node.	Yes
7.	CDMA 2000 1xEV (DO and DV)	3G	1.25 MHz	FDD	No	It needs software and digital card upgrade on the 1xRTT networks.	Yes
8.	CDMA 2000 3xRTT	3G	3.75 MHz	FDD	May be	They need backbone modifications and new channel cards at base station.	Yes

1.8.1.3 EDGE for 2.5G GSM and IS-136 :

- The long form of EDGE is Enhanced Data Rates for GSM or Global Evolution.
- This is a more advanced upgrade to both GSM and IS 136 2G standards, as shown in Fig. 1.8.2.
- The development of EDGE, provides a common evolution path for both GSM and IS-136 which eventually learn to 3G high speed data access.

Modulation format :

- EDGE uses a new modulation format called 8-PSK (octal PSK) in addition to GSM's standard GMSK modulation.
- There are nine different air interface formats that the EDGE technology offers to the user.
- These formats are rapidly selectable and are known as multiple Modulation and Coding Schemes **(MCSs)**. Each MCS stale uses the **GMSK** for low data rate and **8-PSK** for high data rates.
- EDGE is sometimes also called as the Enhanced GPRS or EGPRS.

Range of coverage :

- The range of coverage in EDGE is smaller than that as compared to GPRS and the other systems, due to the following reasons :
  1. EDGE supports higher data rates.
  2. EDGE allows a relaxed error control.

Incremental redundancy :

- For each time slot in GSM, the EDGE technology uses the 8- PSK modulation.
- This allows each user (in that time slot) to adaptively determine the best MCS setting for itself.
- This adaptive capability of selecting The best possible air interface is defined as the **incremental redundancy.**
- In the incremental redundancy, the packets are first sent with maximum error protection and maximum data rate throughput.
- The error protection and data rate throughput are reduced progressively for the subsequent packets, until the wireless link faces an unacceptable outage or delay.
- The previously acceptable air interface is then restored with the help of rapid feedback between the base station and user.

Advantages of incremental redundancy :

- Following are some of the benefits of incremental redundancy :
  1. Each radio link uses minimum overheads.
  2. It maximizes the user capacity.
  3. It provides an acceptable link quality for each user.

Data rate :

- We can obtain a raw peak throughput data rate of 547.2 kbps if EDGE uses the 8-PSK modulation without any error protection, with all the eight time slots in GSM dedicated to a single user.
- However the practical maximum raw throughput data rate in EDGE is restricted to 384 kbps for a single dedicated user on a single GSM channel. Due to EDGE slotting schemes, network contention issues and error coding requirements.
- EDGE can provide the throughput data rates of several Mbps to individual users, by combining the capacity of different radio channels.

EDGE Implementation :

- EDGE requires a few hardware as well as Software upgrades at the existing GSM on IS-136 base station.
- It requires new transceivers at the base stations and software upgrades at the base station and base station controller.

1.8.2 IS-95B for 2.5G CDMA :

- The 2G TDMA standards (GSM and IS-136) have multiple evolutionary paths.
- But 2G CDMA standard (IS-95 or cdmaOne) has only one evolutionary path which is from IS-95 to IS-95B.
- IS-95B, like GPRS is being used all over the world.

Principle :

- IS-95B dedicates multiple orthogonal user channels (Walsh functions) to different users simultaneously, similar to IS-95.
- It uses high speed packer and circuit switched data on a common CDMA channel.

Data rates :

- The maximum data rate of IS-95 is 9.6 kbps which was improved to 14.4 kbps in IS-95A which is further improved to 115.2 kbps to a dedicated user (8 x 14.4 kbps).
- This is achieved by allowing a dedicated user to command eight different user Walsh codes simultaneously and in parallel.
- However, due to the slotting techniques used by IS-95B standard, the maximum practical data rate at the most equal to 64 kbps.

Better link quality :

- IS-95B standard improves the link quality experienced by the users to a great extent.
- This improvement results due to the **hard hand- off procedure** specified by the IS-95B standard.
- In hard hand-off procedure, subscriber units are allowed to search different radio channels in the network, without instructions from the switch.

- Due to this the subscriber units can tune rapidly to different base stations to maintain a high link quality.
- The link quality in IS-95 is inferior, because it used the soft handoff procedure.

Applications :

- IS-95B standard, supports 64 simultaneous subscribers and it is used for the Medium Data Rare **(MDR)** services.
- Fig. 1.8.3 illustrates the evolution path for the only 2G CDMA standard.

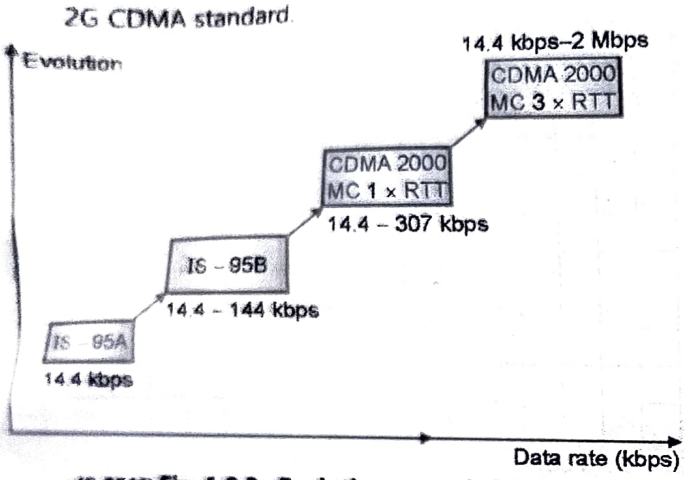

(G-2546) Fig. 1.8.3 : Evolutionary path for IS-95A (cdmaOne) standard

1.9 Third Generation (3G) Networks :

- The third generation of wireless mobile communication systems have been developed to meet the International Mobile Telecommunication 2000 (IMT-2000) specifications which are defined by International Telecommunications Union (ITU).
- The 3G systems have evolved due to the need for high speed, fast data transmission and better quality of service (QoS).
- The 3G systems were launched in 2001 and it provides the network for transporting rich **multimedia** contents.
- The 3G systems use circuit switching technology for voice calls/SMS facility, whereas they use the packet switching for the high speed data.
- The well known examples of 3G systems are :

1. W-CDMA 2. CDMA-2000 3. TD-SCDMA

- 3G systems are compatible with the other cellular standards like CDMA, GSM and TDMA.
- The frequency range used by the 3G standards is 2100 MHz and it has a bandwidth of 15-20 MHz.
- 3G standards facilitate the users to use high speed internet services, as well as video chatting.
- The international roaming has become possible due to 3G standard.
- Universal Mobile Telecommunications System (UMTS) was adopted by Europe which uses W-CDMA as its standard.
- UMTS is based on the GSM infrastructure. Hence UMTS is the most popular 3G technology.

1.9.1 Features of Third Generation :

- Some of the important features of 3G mobile systems are as follows :

Table 1.9.1 : Features of the 3G-mobile systems

Sr. No.	Feature	Value / Description
1.	Generation	3G (2001)
2.	Technology	Broadband / IP, FDD, TDD
3.	Standards	CDMA, W-CDMA, UMTS.
4.	Switching	Circuit/Packet switching
5.	Frequency band	1.6 GHz to 2.5 GHz
6.	Data speed	2 Mbps
7.	Multiplexing	CDMA
8.	Core network	Packet network
9.	Services	High speed data, voice, video
10.	Handoff	Horizontal

- Aim of the third generation technology is to combine the services such as internet, telephony and multimedia into a single device.

1.9.2 Services Provided by 3G Systems :

1. Voice :

- 3G system will provide good speech quality as compared to the telephone network.

2. **Messaging :**

- E-mail attachments are allowed in 3G system.

3. **MMSC multimedia messaging services :**

- 3G supports MMS which are designed for rich text, icons, logos, animated clips etc.

4. **Medium multimedia :**

- In 3G system, for web surfing, games, location based maps its downstream data rate is suitable.

5. **Interactive high multimedia :**

- 3G supports for this service which is used for high quality videophones, videoconferencing etc.

1.9.3 Advantages of 3G Networks :

- The third generation of wireless networks (3G systems) provide a wireless access, that the earlier networks could never provide in ways that have never been possible earlier.
- Some of the advantages of the 3G networks are as follows :
  1. They provide data rates of multiple mbps for Internet access.
  2. Communication using Voice over Internet Protocol (VoIP) is possible.
  3. Voice activated calls.
  4. Very high networks capacity.
  5. The access to data networks is "always-on" type.
- The 3G equipment are designed in such a way that the users can receive live music, conduct interactive web sessions and have simultaneous voice and data access with multiple parties at the same time using a single mobile handset, either moving or stationed at one place.
- In order to facilitate the operation of 3G systems, the International Telecommunications Union (ITU) prepared a plan called as **International Mobile Telephone 2000 (IMT-2000)**.
- IMT-2000 standard uses a global frequency band in the 2000 MHz range that supports a wireless communication standard for all countries throughout the world.
- This ITU plan has been successful in initiating an active debate and technical analysis for new high speed mobile telephone solutions in comparison to the 2G.
- However, the hope for a single worldwide standard has not materialized, because the worldwide user community remains divided between two standards : GSM/IS-136/PDC and CDMA IS-95.
- The cdma2000, a 3G standard was eventually developed by following the path : IS-95, IS-95B and cdma 2000 as shown in Fig. 1.8.1.
- Several variants of CDMA 2000 are currently being developed, that are all based on the fundamentals of IS-95 and IS-95B technologies.
- The evolution of the 2G TDMA standards (GSM, IS-136 and PDC systems) has eventually lead to the Wideband CDMA (W-CDMA), Universal Mobile Telecommunication Service (UMTS) as shown in Fig. 1.8.1.
- W-CDMA is based on the network fundamentals of GSM, as well as the merged versions of GSM and IS-136 through EDGE.
- The ITU 200 MT-2000 standard organizations are separated into two organizations, according to the two 3G camps :
  1. 3GPP.
  2. 3GPP2.
- The 3GPP stands for 3G Partnership project for wideband CDMA standard and it is backward compatible with GSM and IS-136/PDG 2G standards.
- 3GPP2 stands for 3G Partnership Project for cdma 2000 standard which is backward compatible to IS-95.

1.10 Fourth Generation (4G) Networks :

- The 4G wireless systems were designed to fulfill the requirements of International Mobile Telecommunications Advanced (IMT-A) using IP (Internet Protocol) for all the services.

- 4G LTE which means fourth generation **Long Term Evolution**.
- It offers the users faster, more reliable mobile broadband Internet for the devices such as the smart phones, the tablets and the laptops.
- 4G LTE is very fast (10 times faster than the 3G network). It provides extremely high voice quality.
- It is possible to download large files, very fast using the wireless 4G LTE network.
- In 4G systems, an advanced radio interface is used with Orthogonal Frequency Division Multiplexing (OFDM), Multiple Input Multiple Output (MIMO) and the link adaptation technologies.
- 4G standards also includes **Long Term Evolution (LTE)** and IEEE 802.16 (Wi-Max).
- The 4G systems provide very high data rates as compared to 3G.
- But the major problem with 4G systems is security because of its IP address system.

1.10.1 Features of 4G Systems :

- The important features of 4G mobile systems are as follows :

Table 1.10.1 : Features of the 4G-mobile systems

Sr. No.	Feature	Value / Description
1	Generation	4G (2010)
2	Technology	IP-Broadband, Wi-Fi, MIMO
3	Standard	WiMax and LTE
4	Switching	Packet switching
5	Frequency band	2 GHz - 8 GHz
6	Data speed	50 Mbps
7	Multiplexing	MC-CDMA and OFDM
8	Core network	Internet
9	Service	Dynamic Information Access
10	Handoff	Vertical

1.10.2 4G (LTE) Network Structure (Architecture) :

- Fig. 1.10.1 shows the network structure of LTE (4G), where LTE stands for Long Term Evolution.
- 4G network architecture is simple which contains single type of access point i.e eNode B or Base station.
- One or more cells are supplied by eNode B or BS.

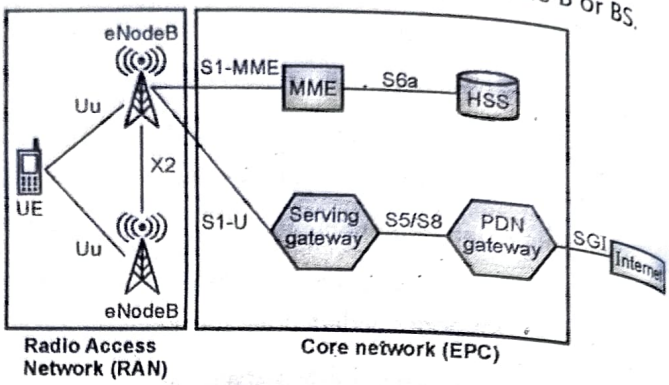

MME : Mobile Management Entity
HSS : Home Subscriber Server
PDN : Packet Data Network
UE : User Equipment

(G-2590) Fig. 1.10.1 : 4G architecture

- As shown in Fig. 1.10.1, the 4G (LTE) network consists of :
  1. Radio Access Network (RAN).
  2. Core network (EPC).
  3. Radio interface.

1. Radio Access Network :

- The radio access network is also known as EUTRAN or Evolved Universal Mobile Telecommunications System.
- The Radio Access Network consists of an LTE mobile terminal, radio interface and eNodeB.
- **LTE Mobile Terminals :** LTE mobile terminals are the mobile phones and other devices which support the LTE.
- **Radio Interface :** Radio interface are the radio links that connect the LTE mobile terminals and eNodeB.
- **eNodeB :** E-UTRAN Node B or eNodeBs are located all over the network of the mobile operator and they connect the LTE mobile terminal to the core network via radio interface S1.

Functions of eNodeB :

- The functions of eNodeB are as given below :
  1. Scheduling / Radio resource allocation.
  2. Retransmission control.
  3. Physical layer functions.
  4. Air interface communication.

2. Core network (EPC) :

- The Enhanced Packet Core (EPC) developed for the 4G is also known as System Architecture Evolution (SAE) which is based on the packet switched transmission.
- The LTE Core Network is the brain of 4G system. Core network consists of :
  I. Mobility Management Entity (MME).
  II. Serving Gateway (S-GW).
  III. PDN (Packet Data Network) Gateway (P-GW).
  IV. HSS (Home Subscriber Server).

I. Mobility Management Entity (MME) :

- The function of MME is to handle the signalling of messages, tracking, security and paging of mobile terminals.

II. Serving Gateway (S-GW) :

- The serving gateway is connected to RAN (Radio Access Network) through S1 interface.
- It serves as a router for forwarding the data packets between the user equipment and the PDN gateway.

III. PDN (Packet Data Network) Gateway (P-GW) :

- PDN (Packet Data Network) Gateway connects the EPC /core network with internet through SGI interface. PDN routes traffic to and from the PDN networks.

IV. HSS (Home Subscriber Server) :

- HSS (Home Subscriber Server) is the database of all mobile users, which contains all data of subscriber.
- It is also responsible for authentication and call and session setup.

Functions of core network :

- Functions of the core network are as follows :
  1. Charging and subscriber management.
  2. Mobility management.
  3. Provision of quality of service.
  4. Policy control of user data flows.
  5. Connection to other external networks.

3. Radio Interface :

- Refer Fig. 1.10.1 to understand different radio interfaces in LTE.
- **Interface x2 :** This is an interface, which connects different base stations. The important information required for the coordination of transmission in neighboring cells can be exchanged through this interface.
- **Interface S1 :** RAN is connected to the core network through interface S1.
- **Interface Uu :** This is an interface, which connects UE (user equipment) and eNodeB.
- **Interface S1-U :** This is an interface for the user plane between an E-UTRAN and S-GW. It provides GTP tunnel per carrier.
- **Interface S1-MME :** This is an interface for the control plane between an E-UTRAN and MME.
- **Interface S6a :** This is an interface for the control plane between an HSS and MME. It exchanges user subscription and authentication information.
- **Interface S5/S8 :** This is an interface defined for the control and user planes between an S-GW and P-GW.
- **Interface SGI :** This is an interface defined for the control and user planes between an P-GW and Internet.

1.10.3 Specifications of 4G LTE :

- Following are some important specifications of 4G LTE :

1. **Peak data rates :** Downlink-1Gbps; uplink - 300 Mbps.
2. **Spectrum efficiency :** 3 times greater than LTE.
3. Speed 10 times faster than the 3G network.
4. **Peak spectrum efficiency :** Downlink - 30 bps / Hz; uplink - 15 bps / Hz.
5. 4G LTE is flexible and reliable.
6. It is easy to standardize and affordable.

1.10.4 Advantages of 4G :

1. Improved voice quality.
2. High data transfer speed.
3. Uninterrupted connectivity.
4. Good coverage.
5. It provides security, privacy and safety.
6. Affordable service.

1.10.5 Disadvantages of 4G :

- A 4G network needs more number of antennas and transmitters.
- Therefore, user will experience poor battery life on their mobile devices.

1.10.6 Applications of 4G :

- The 4G is developed to support the QoS and data rate requirements of the advanced applications such as :

1. Wireless broadband access.
2. Multimedia Messaging Service (MMS).
3. Video chat.
4. Mobile TV.
5. HDTV.
5. Digital Video Broadcasting (DVB).
7. Voice and data.
8. Other services which need large bandwidth.

1.11 Multiplexing and Demultiplexing :

Multiplexing :

- Multiplexing is the process of simultaneously transmitting two or more individual signals over a single communication channel.
- Due to multiplexing it is possible to increase the number of communication channels so that more information can be transmitted.
- The typical applications of multiplexing are in telemetry and telephony or in the satellite communication.

Multiplexer :

- A multiplexer is an electronic circuit that performs multiplexing of the signals applied at its input to produce one combined signal.
- The concept of a simple multiplexer is illustrated in Fig. 1.11.1.

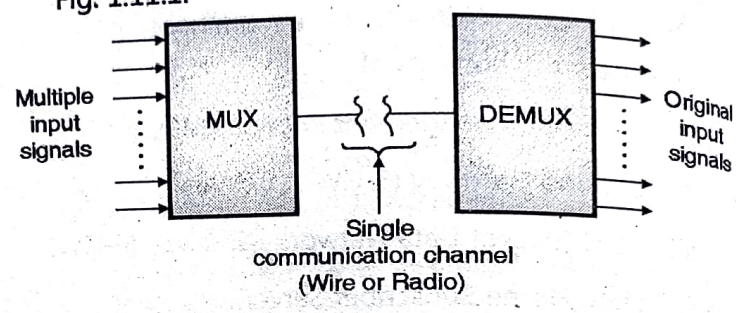

(L-105) Fig. 1.11.1 : Concept of multiplexing

- The multiplexer receives a large number of different input signals.
- It has only one output which is connected to the single communication channel.
- Sometimes the composite signal is used for modulating a carrier before transmission.

Demultiplexing :

- Demultiplexing is defined as the process of separating out the signals from a multiplexed signal.

De-multiplexer :

- A de-multiplexer is an electronic circuit that performs demultiplexing of the multiplexed signals applied at its input to separate out the individual signals.
- The concept of a simple demultiplexer is illustrated in Fig. 1.11.1.
- At the receiving end, of communication link, a demultiplexer is used to separate out the signals into their original form.
- The operation of demultiplexer is exactly opposite to that of a multiplexer.

Need of Multiplexing :

- In the applications like telephony, there are large number of users involved.
- It is not possible to use a separate pair of wires from each subscriber to all the other subscribers.
- This is very expensive and practically impossible.
- Instead if we use the principle of multiplexing, then we can use a common communication medium such as a coaxial cable or an optical fiber cable to carry telephone signals originated from a number of subscribers.
- The same principle is applicable to every application in which many signals originating from different sources are to be sent over a single communication medium.

1.11.1 Multiplexing Techniques :

- There are three basic multiplexing techniques as follows :
  1. Frequency Division Multiplexing (FDM).
  2. Time Division Multiplexing (TDM).
  3. Wavelength Division Multiplexing (WDM).
- The multiplexing techniques can be broadly classified into two categories namely analog and digital.
- Analog multiplexing can be either FDM or WDM and digital multiplexing is TDM.
- Fig. 1.11.2 shows the classification of multiplexing techniques.

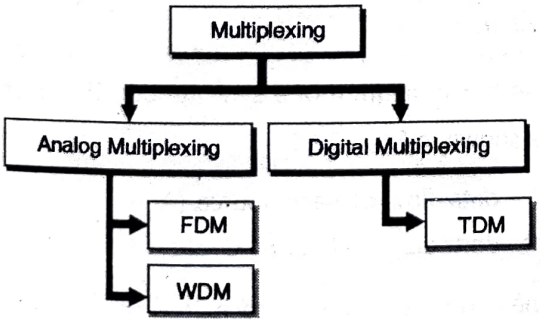

(L-106) Fig. 1.11.2 : Classification of multiplexing techniques

- Generally the FDM and WDM systems are used to deal with the analog information whereas, the TDM systems are used to handle the digital information.
- In FDM many signals are transmitted simultaneously where each signal occupies a different frequency slot within a common bandwidth.
- In TDM the signals are not transmitted at a time, instead they are transmitted in different time slots.

1.12 Frequency Division Multiplexing (FDM) :

Definition :

- FDM is a type of multiplexing in which all the signals or channels to be multiplexed are transmitted at the same time with each channel occupying a distinct non overlapping frequency band.
- The operation of FDM is based on sharing the available bandwidth of a communication channel among the signals to be transmitted.
- That means many signals are transmitted simultaneously with each signal occupying a different frequency slot within the total available bandwidth.
- Each signal to be transmitted modulates a different carrier.
- The modulation can be AM, SSB, FM or PM.
- The modulated signals are then added together to form a composite signal which is transmitted over a single channel.

Spectrum of FDM :

- The spectrum of the composite FDM signal is shown in Fig. 1.12.1.

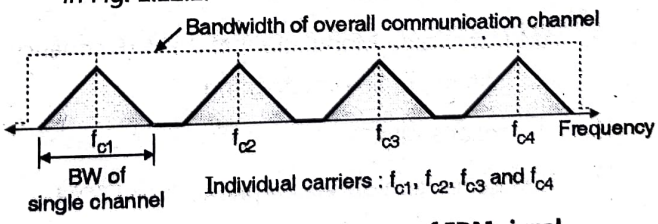

(L-107) Fig. 1.12.1 : Spectrum of FDM signal

- Generally the FDM systems are used for multiplexing the analog signals.

Guard bands and their Importance :

- The adjacent spectrums in the spectrum of an FDM signal (Fig. 1.12.1) do not touch each other.

- They are separated from each other by the guard bands.
- The guard bands are introduced in order to avoid any interference between the adjacent channels.
- Wider the guard band, smaller the interference.

1.12.1 Advantages of FDM :

- FDM has the following advantages :
  1. A large number of signals (channels) can be transmitted simultaneously.
  2. FDM does not need synchronization between its transmitter and receiver for proper operation.
  3. Demodulation of FDM is easy.
  4. Due to slow narrow band fading only a single channel gets affected.

1.12.2 Disadvantages of FDM :

- FDM has the following disadvantages :
  1. The communication channel must have a very large bandwidth.
  2. Intermodulation distortion takes place.
  3. Large number of modulators and filters are required.
  4. FDM suffers from the problem of crosstalk.
  5. All the FDM channels get affected due to wideband fading.

1.12.3 Applications of FDM :

- Some of the important applications of FDM are :
  1. Telephone systems.
  2. AM (Amplitude Modulation) and FM (Frequency Modulation) radio broadcasting.
  3. TV broadcasting.
  4. First generation of cellular phones used FDM.

1.13 Time Division Multiplexing (TDM) :

Definition :

- TDM is defined as the type of multiplexing in which, the signals to be multiplexed are sent in a sequential manner (one by one) but all of them occupy the same frequency band.
- The process called multiplexing is used in order to utilize common transmission channel or medium to transmit more than one signals simultaneously.
- TDM is a digital multiplexing process.

Concept :

- In TDM all the signals to be transmitted are not transmitted simultaneously.
- Instead, they are transmitted one-by-one.
- Thus each signal will be transmitted for a very short time.
- One cycle or frame is said to be complete when all the signals are transmitted once on the transmission channel.
- The TDM principle is illustrated in Fig. 1.13.1.

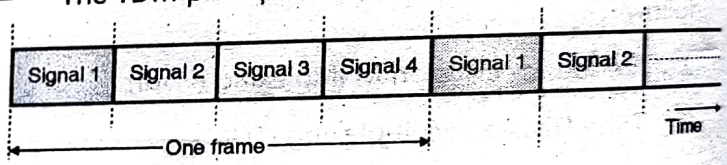

(L-122) Fig. 1.13.1 : Principle of TDM

- As shown in the Fig. 1.13.1 one transmission of each channel completes one cycle of operation called as a "Frame".
- The TDM system can be used to multiplex analog or digital signals, however it is more suitable for the digital signal multiplexing.

Block diagram :

- The block diagram of a synchronous TDM system is as shown in Fig. 1.13.2.
- The data flow of each source (A, B or C) is divided into units (say A_1, A_2 or B_1, C_1 etc.)
- Then one unit from each source is taken and combined to form one frame.
- The size of each unit such as A_1, B_1 etc. can be 1 bit or several bits.

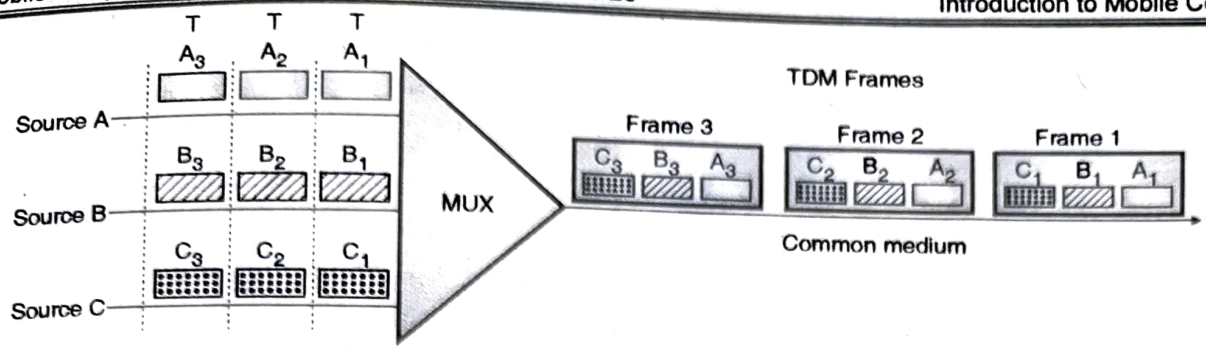

(L-123) **Fig. 1.13.2 : TDM system**

A TDM Frame :

- Fig. 1.13.3 shows the frames of TDM signal.

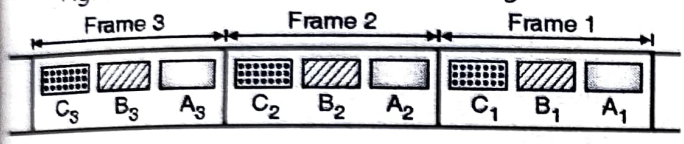

(L-124) **Fig. 1.13.3 : TDM frames**

- For 3 inputs being multiplexed, a frame of TDM will consist of 3 units i.e. one unit from each source.
- Similarly for n number of inputs, each TDM frame will consist of n units.
- The TDM signal in the form of frames is transmitted on the common communication medium.

Data rate :

- For a TDM, the data rate of the multiplexed signal is always n times the data rate of individual sources, where n is the number of sources.
- So if three sources are being multiplexed, then the data rate of the TDM signal is three times higher than the individual data rate.
- Naturally the duration of every unit (A_1 or B_1 etc.) in TDM signal is n times shorter than the unit duration before multiplexing.

1.13.1 Advantages of TDM :

- TDM has the following advantages :
  1. Full available channel bandwidth can be utilized for each channel.
  2. Intermodulation distortion is absent.
  3. TDM circuitry is not very complex.
  4. The problem of crosstalk is not severe.

1.13.2 Disadvantages of TDM :

- TDM has the following disadvantages :
  1. Synchronization is essential for proper operation.
  2. Due to slow narrowband fading, all the TDM channels may get wiped out.

1.13.3 Applications of TDM :

- TDM is used in the following applications :
  1. Multiplexing of digital signals.
  2. Digital telephony.
  3. Satellite communications.
  4. Fiber optic communication.
- 5. Wireless communication applications.

1.14 Spread-Spectrum Multiple Access (SSMA) :

- A cellular system is designed with an objective to reuse the radio spectrum allocated to it over a large area as many times as possible. Either FDMA or TDMA technique can be used within a cell to share the wireless medium.
- However FDMA and TDMA systems have a major drawback when used in cellular systems, that the reuse distance is limited by worst-case co-channel interference.

Principle of SSMA :

- The Spread Spectrum Multiple Access (SSMA) is a technique that uses signals which have a transmission bandwidth several times higher than the minimum required RF bandwidth.

- In other words the spread-spectrum technique spreads the information-bearing data signal over a large bandwidth.
- Due to this, the SSMA allows many subscribers in adjacent cells to use the same spectrum simultaneously. SSMA is immune to multipath interference and robust capability for multiple access.
- However the drawback of SSMA is that it is not very bandwidth efficient when used by a single subscriber.
- There systems become bandwidth efficient when used for multiple subscribers because many subscribers can share the same spread spectrum bandwidth without interfering with one another.

Working of spread spectrum technique :

Spread spectrum can be defined as a transmission technique in which the transmitted data occupies a larger bandwidth than required. The process of bandwidth spreading is achieved at the transmitter by using of a code that is independent of the subscriber data.

Then at the receiver the same code is used to demodulate the received data. The SS systems use certain modulation techniques which spread the information signal with bandwidth R_b, to occupy a much larger transmission bandwidth R_c.

Thus in SS systems the transmission bandwidth R_c is much larger than the signal bandwidth R_b.

In FDMA system, the available frequency spectrum is divided into N subscribers. Hence the channel bandwidth allotted to each subscriber is $B_c = B_i / N$.

In spread-spectrum techniques, there is no such spectrum division.

Instead multiple subscribers are permitted to use the entire or any part of the spectrum when transmitting simultaneously.

SS techniques have higher immunity to noise and interference as they use wideband, noise-like signals.

- These signals are difficult to demodulate, detect, intercept or jam than narrowband signals.
- Spread signals intentionally occupy much wider bandwidth than the actual bandwidth of the information signals, to behave as more noise-like. These signals use fast code signals called as spreading signals, with a data rate much higher than the data rate of the information signal.
- These spreading codes are referred to as **pseudorandom or pseudonoise (PN)** codes or (PN) sequence.
- A pseudo-noise (PN) sequence is defined as a coded sequence of 1s and 0s with certain auto-correlation properties.
- The PN sequence is a random sequence which is impressed on the transmitted signal at the transmitter to spread the signal randomly over a large frequency spectrum.
- Due to the random nature of the PN sequence, the SS transmitted signals appears to be the noise signal to all the receivers except the desired receiver.
- The power levels used by spread-spectrum transmitters are similar to that of any narrowband transmitters. Spread spectrum are considered as a digital modulation technique, with wide frequency spectra.
- A modulated signal can be qualified as a spread spectrum signal, if it satisfies the following two criteria:
- The bandwidth of the transmitted signal is much greater than that of the information data signal.
- Orthogonal PN code sequence determines the actual transmitted bandwidth on-the-air.

Importance of SS :

- The spread spectrum communication is a very secure communication. An unwanted person cannot receive the SS communication.
- This aspect of SS communication protects the information from hackers.

- It is therefore used in military as well as non-military communication applications.

1.15 Spread Spectrum Technologies :

- Spread Spectrum Technology (SST) is the most widely used technology in wireless networks. SST was developed for proving greater security for the military communications.
- SST works on the principle of spreading the signal over a number of frequencies.
- Therefore it becomes very difficult for an unauthorized person to intercept the signal.
- The major difference between the SST and traditional radio technology is that the bandwidth occupied by the transmitted signal in SST is much larger than that occupied by the traditional radio modems.
- However, the occupied bandwidth by spread spectrum is much lower than that in the UWB system.
- Therefore the spread spectrum radio can share the medium with other spread spectrum and traditional radios by using the FDM technique.
- The two basic techniques used to deploy SST are as follows :
  1. Frequency hopping spread spectrum (FHSS).
  2. Direct sequence spread spectrum (DSSS).

1.15.1 Frequency Hopping Spread Spectrum (FH-SS) :

- The principle of FHSS technique is based on splitting the frequency band into many small subchannels.
- The signal is made to hop from subchannel to subchannel each time transmitting short bursts of data for a predefined time period called as the **dwell time.**
- The hopping sequence at the receiver must be synchronized with that at the sender for proper reception of information.
- The information is lost if the synchronization is lost.
- The allotted frequency band is split into at least 75 subchannels and that the longest dwell time is 400 ms.
- The FHSS system is less susceptible to interference because the transmitted frequency is shifting constantly at a very fast rate.
- Hence the FHSS systems are extremely difficult to intercept and they offer a high degree of security.
- The whole band must be jammed in order to jam a frequency hopping system.
- These features are very attractive to agencies involved with law enforcement or military.
- It is possible to co-locate many FHSS LANs, if an orthogonal hopping sequence is used. The subchannels in FHSS are smaller than in DSSS.
- Therefore a larger number of co-located LANs are possible with FHSS systems.

1.15.2 Direct Sequence Spread Spectrum (DS-SS) :

- In the DSSS, the signal to be transmitted is spread over a large frequency band. DSSS is a two-stage modulation technique.
- In the first stage of modulation, a random binary string, called the **spreading code**, is used to modulate the transmitted signal to map (spread) the data bits to a pattern of "chips".
- In the second stage of modulation, these chips are transmitted over traditional digital modulator.
- The receiver first demodulates the chips and then passes then through a correlator that maps (dispreads) the chips back into data bits.
- The **spreading ratio** is defined as the number of chips that represent a bit. The DSSS signal becomes more resistant to interference with increase in the value of the spreading ratio.
- However for lower values of the spreading ratio, more bandwidth is available to the user. According to FCC rules the spreading ratio must be more than ten.

- For example, the physical layer of the IEEE 802.11 WLAN standard using DSSS needs a spreading ratio of eleven. There has to be a perfect synchronization between the transmitter and the receiver with same spreading code.
- If the system uses orthogonal spreading codes, then multiple LANs can share the same frequency band.
- The DSSS systems have the ability to spread the signal over a wider frequency band.
- The bandwidth of any digital system increases with decrease in the duration of the transmitted pulse or symbol.
- The transmitted chips in DSSS are much narrower than data bits. Therefore the bandwidth of the DSSS signal is much larger than that of the systems without spreading.
- Therefore, the DSSS is a wideband system, whereas FHSS is a narrowband system.
- The DSSS systems have a better coverage area than FHSS. But we can implement the FHSS with much lower sampling rates, at less implementation costs and power consumption of the mobile units.
- These merits and demerits have guided the use of these systems in different WLAN and WPAN applications.
- For example, both DSSS and FHSS are used in IEEE 802.11b standard. Whereas Bluetooth uses only FHSS, because of its low power and low cost requirements.

1.16 Direct Sequence Spread Spectrum (DS-SS) System :

- One of the important spread spectrum technique is called as **"Direct Sequence Spread Spectrum"** (DS-SS) technique. The DS-SS technique can be used in practice for transmission of signal over a bandpass channel such as the satellite channel.
- For such an application, the coherent Binary Phase Shift Keying (BPSK) is used as modulation scheme in the transmitter and receiver. The transmitter is as shown in Fig. 1.16.1.

Definition :

- Direct Sequence Spread Spectrum (DSSS) is a spread spectrum technique in which the original data signal is multiplied with a PN spreading code.
- This results in a wideband time continuous scrambled signal.

DS-SS Transmitter :

- The DSSS transmitter is shown in Fig. 1.16.1.

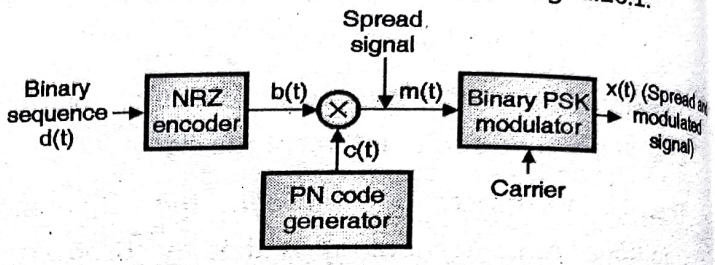

(E-480) Fig. 1.16.1 : DSSS transmitter

Operation :

- The binary sequence d(t) is converted into NRZ signal b(t) by applying d(t) to the NRZ encoder. The NRZ signal b(t) at the output of the NRZ encoder is then used to modulate the PN sequence c(t) generated by the PN code generator.
- The transmitter of Fig. 1.16.1 uses two stages of modulation. The first stage uses a product modulator or multiplier with b(t) and c(t) as its inputs and the second stage consists of a BPSK modulator.
- The modulated signal at the output of the product modulator i.e. m(t) is the spread version of the original input and it is used to modulate the carrier for BPSK modulation. Thus the BPSK modulator will modulate the spread signal (SS) to produce a DS-SS BPSK signal.
- The transmitted signal x (t) is thus a direct sequence spread BPSK i.e. DS-BPSK signal.

DS-SS Receiver :

- The DS-BPSK receiver is as shown in Fig. 1.16.2.

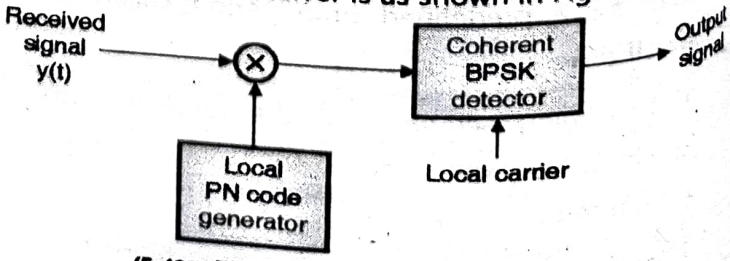

(E-482) Fig. 1.16.2 : The DS-SS receiver

Operation :

- At the receiver we have to generate the replica of the original PN-sequence used at the transmitter.
- The received signal y(t) and the locally generated replica of the PN-sequence are applied to a multiplier.
- This is the first stage of multiplication. The multiplier performs the de-spreading operation. Output of multiplier is then applied to a coherent BPSK detector with a locally generated synchronous carrier applied to it.
- At the output of the coherent BPSK detector we get back the original data sequence i.e. d(t).

Synchronization :

- For proper operation, the spread spectrum system requires a local PN sequence at the receiver to by **synchronized** with the PN sequence at transmitter.

1.16.1 Advantages and Disadvantages of the DS-SS System :

Advantages :

1. This system has a very high degree of discrimination against the multipath signals. Therefore the interference caused by the multipath reception is minimized successfully.
2. The performance of DS-SS system in presence of noise is superior to other systems such as FH-SS system.
3. This system combats the intentional interference (jamming) most effectively.

Disadvantages :

1. With the serial search system, the acquisition time is too large. This makes the DS-SS system slow.
2. The sequence generated at the PN code generator output must have a high rate. The length of such a sequence needs to be long enough to make the sequence truly random.
3. The channel bandwidth required, is very large. But this bandwidth is less than that of a FH-SS system.
4. The synchronization is affected by the variable distance between the transmitter and receiver.

1.16.2 Applications of DS-SS System :

- Some of the important applications of the DS-SS system are as follows :
  1. To combat the intentional interference (jamming).
  2. To reject the unintentional interference.
  3. To minimize the self interference due to multipath propagation.
  4. In the Low Probability of Intercept (LPI) signal.
  5. In obtaining the message privacy.
  6. Code division multiple access with DS-SS.

1.17 Frequency Hop Spread Spectrum (FH-SS) Multiple Access :

Definition :

- FHSS is a method of transmitting radio signals by rapidly switching a carrier among many frequency channels using a PN sequence known to both transmitter and receiver.

Principle of operation of (FH-SS) system :

- In this system the data is used to modulate a carrier. The data modulated carrier is then **randomly hopped** from one frequency to the other.
- Due to this, the spectrum of transmitted signal is spread sequentially rather than instantaneously.

When to use FH-SS ?

- In the DS-SS system discussed in the previous section, the NRZ data sequence b(t) modulates the PN sequence.
- The product signal [m(t) = b(t) × c(t)] is spread instantaneously in the frequency domain due to this process.

- The capacity of DS-SS system to reject the intentional interference (jamming) is dependent on the "processing gain PG".
- The processing gain PG = (T_b / T_c). Hence PG increases if the chip period T_c is decreased which in turn permits a greater transmission bandwidth and more chips per bit.

Problem :

- But the capabilities of the physical devices used for the generation of PN spread spectrum signal put a practical limitation on the maximum value of "processing gain" and hence on the capability to combat jamming.
- Under some operating conditions the maximum attainable processing gain $PG_{(max)}$ is not sufficiently high for combating the jamming. Under such conditions an alternative system called Frequency Hop (FH) spread spectrum.

Types of modulation :

- A common modulation technique used is the M-ary frequency shift keying (MFSK). The combination of frequency hopping (FH) and MFSK is known as FH / MFSK.

1.17.1 Operation of FH-SS :

- Refer Fig. 1.17.1 to understand the principle of FHSS. The frequency hopped multiple access technique is based on the frequency hopping spread spectrum (FHSS) modulation scheme.
- The SS signal with a wideband frequency spectrum is generated in a different manner in a frequency hopping technique.
- In frequency hopping, the transmission frequency is periodically changed over a wide band. The rate of hopping from one frequency to another depends on the information rate.
- Whereas the specific order in which the signal occupies the frequencies is a function of a code sequence.
- The set of possible carrier frequencies say f_1, f_2, f_3, f_4 is called the **hopset.** Hopping occurs over a frequency band that includes a number of channels.
- We may define each channel as a spectral band with a central frequency in the hopset and a sufficient bandwidth.
- The bandwidth of a channel is called the instantaneous bandwidth whereas, the bandwidth of the spectrum over which the hopping takes place is called the total hopping bandwidth.
- The FHSS transmitter sends data by changing (hopping) the transmitter carrier frequencies from frequency to the other in a seemingly random manner, which is known only to the desired receiver.
- As shown the bandwidth of a frequency-hopping signal is 'w' times the number of frequency slots available, and the bandwidth of each hop channel is equal to 4w.

FHSS transmitter and receiver :

- In an FHSS transmitter and receiver a pseudorandom (PN) frequency hopping sequence is used as shown in Fig. 1.17.1.

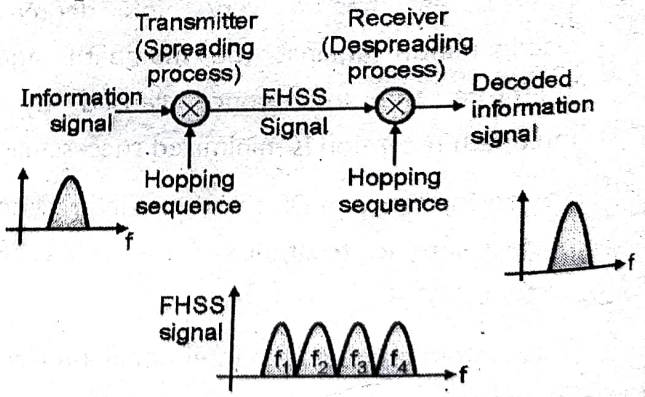

(O-1105) Fig. 1.17.1 : Basic concept of FHSS technique

- At the transmitter it is used for changing the radio signal frequency randomly across a broad frequency band in a random manner.
- In this way in FHSS, the radio transmitter frequency hops from one channel to the other channel in a predetermined but pseudorandom sequence.
- The received signal at the receiver is despread by using a frequency synthesizer which is controlled by a pseudorandom sequence generator.

- The PN sequence generator is synchronized to the transmitter's pseudorandom sequence generator.

1.17.2 Types of Frequency Hopping :

- Depending on the rate of frequency hopping, the FH/MFSK systems are classified into two categories :
  1. Slow frequency hopping.
  2. Fast frequency hopping.

1. Slow frequency hopping :

- The slow frequency hopping is the type of FHSS in which the **symbol rate R_s** of the MFSK signal is an integer multiple of the hop rate R_h.
- That means several symbols are transmitted corresponding to each frequency hop.

∴ Each frequency hop ⇒ Several symbols.

- Thus frequency hopping takes place slowly.

2. Fast frequency hopping :

- It is the type of FHSS in which the hop rate R_h is an integer multiple of the MFSK **symbol rate R_s.**
- That means during the transmission of one symbol, the carrier frequency will hop several times.

∴ Each symbol transmission ⇒ Several frequency hops.

- Thus the frequency hopping takes place at a fast rate.

1.17.3 Advantages and Disadvantages of FH-SS System :

Advantages :

1. The synchronization is not greatly dependent on the distance.
2. The serial search system with FH-SS needs shorter time for acquisition.
3. The processing gain PG is higher than that of DS-SS system.

Disadvantages :

1. The bandwidth of FH-SS system is too large (in GHz).
2. Complex and expensive digital frequency synthesizers are required to be used.

1.17.4 Applications of FHSS :

- FHSS is being used in a number of applications. The two most important of them are as follows :
  1. Wireless Local Area Networks (WLAN) standard for Wi-Fi.
  2. Wireless Personal Area Network (WPAN) standard of Bluetooth.

1.18 Medium Access Control (MAC) :

- In the following sections we introduce several Medium Access Control (MAC) algorithms which are specifically adapted to the wireless domain.
- Medium Access Control consists of all the mechanisms that are necessary to regulate user access to a medium.
- MAC uses various multiplexing techniques such as SDM, TDM, FDM or CDM for the same.
- Thus MAC is similar to traffic regulations for controlling the highway vehicle traffic that uses the same highway to travel.
- The vehicles using the same street simultaneously is an example of Time Domain Multiplexing i.e. TDM and requires rules to avoid collisions.
- MAC does exactly the same thing to regulate the wireless traffic using the same wireless communication channel.
- MAC belongs to layer 2, the data link control layer (DLC) of the ISO/OSI reference model.
- DLC layer is subdivided into the logical link control (LLC), layer 2b, and the MAC, layer 2a.
- The function of DLC is to establish a reliable point to point or point to multi-point connection between different devices over a wired or wireless medium.
- In the following sections we have introduced the basic MAC mechanisms.
- It is important to note that special MAC schemes are needed in the wireless domain because the standard MAC schemes from wired networks often fail to operate in wireless environment.

- We have discussed the problems such as hidden and exposed terminals or near and far terminals for the wired networks.
- However these issues present serious problems in the wireless environment.

1.19 Motivation for a Specialized MAC :

- The main question in related to MAC in the wireless communication is that can we use the MAC schemes from wired networks, such as CSMA/CD as used in the original specification of IEEE 802.3 networks (Ethernet).
- So consider the CSMA/CD which works as follows :
  1. Before sending any message, a sender senses the wired medium (coaxial cable) to check if it is free.
  2. If some other sender is already sending messages then the medium will be busy. Then the sender in step 1 waits until it is free.
  3. If the medium is free, the sender starts transmitting data and continues to check the medium.
  4. If the sender detects a collision while sending, it stops at once and sends a jamming signal.
- This algorithm works very well in the wired networks but fails in the wireless networks. The reason is as follows :
- CSMA/CD is interested in collisions that take place at the receiver and not at the sender.
- That means it is interested to ensure that the signal reaches the receiver without any collisions. However collisions are detected by the sender and not by the receiver.
- This is not a problem in a wired network because, the signal strength can be assumed to be the same all over the wire i.e. at the sender as well as at the receiver.
- Therefore, every sender will notice a collision occurring anywhere in the wire.
- Thus, a sender can listen into the medium at its own place and detect a collision occurring at the receiver.
- However, the situation is not the same in wireless networks.
- The strength of a signal is inversely proportional to the square of the distance travelled. Hence the signal strength at the receiver is much lower than that at the sender.
- Now assume that the sender applies carrier sense and detect an idle medium and starts sending but a collision occurs at the receiver due to a second sender.
- In section 1.19.1, we will explained the hidden terminal problem. The same can happen to the collision detection.
- Thus, the sender does not detect any collision and assumes that the data has been transmitted without errors.
- However, in reality, a collision might have destroyed the data at the receiver.
- This shows that, collision detection is very difficult in wireless environment as the transmission power at the transmitter is much higher than that at the receiver. Therefore CDMA/CD fails in a wireless scenario.
- In the following sections we will discuss some more scenarios where MAC schemes from fixed networks fail.

1.19.1 Hidden Terminal Problem :

- The hidden station problem occurs when a station may not be aware that some other station is transmitting because of either range problem or some obstacle.
- In this situation collision may occur but may not be detected.
- The hidden station problem is illustrated in Fig. 1.19.1. Refer Fig. 1.19.1(a) which shows three wireless stations A, B and C.
- The transmission ranges of stations-B and C have been shown by the two ovals on left and right respectively which shows that station-C is not in the range of B and B is not in the range of C.

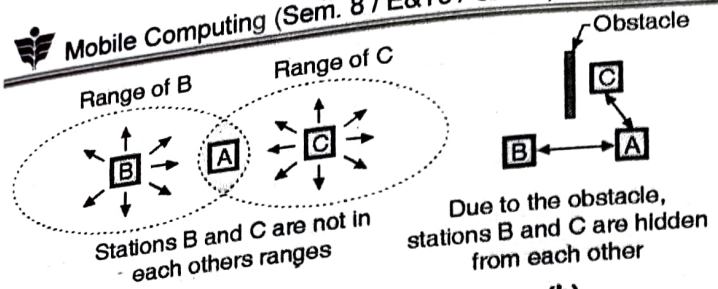

(G-2098) Fig. 1.19.1 : Hidden station problem

- However station-A is in the range of both B and C. So A can hear signals transmitted by B and C.
- Refer Fig. 1.19.1(a) where station-B is transmitting to station A.
- Now if station-C checks the medium to see if anyone is transmitting, it will not hear station B because it is out of range.
- So station-C will come to a wrong conclusion that no one is transmitting and so it can start transmitting to station A.
- If station-C starts transmitting, it will create a collision at station-A and will wipe out the frames from station-B.
- This problem in which a station is not able to detect an already transmitting other station which is too far away is called as the **hidden station problem.**
- In this example it is said that stations-B and C are hidden from each other with respect to station-A.
- Now consider Fig. 1.19.1(b) which shows the hidden station problem occurring due to an obstacle.

Note : Due to hidden station problem, the possibility of collision increases and the capacity network will reduce.

1.19.2 Exposed Terminal Problem :

- We have discussed the problem of hidden station. The **exposed station problem** is a similar problem.
- In this problem, a station refrains from using the common medium even when no other station is using it (i.e. the channel is actually free).
- In order to understand this concept clearly refer Fig. 1.19.2 where A is the sending station and B is the destination. A is sending data to B.

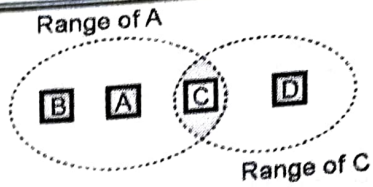

(O-918) Fig. 1.19.2 : Exposed station problem

- Station C wants to send its data to station D and it is possible to do so without interfering in the communication between A and B.
- As shown in Fig. 1.19.2, station C is in the range of station A. In other words C is exposed to A.
- Therefore C listens to what A is transmitting and decides to refrain itself from sending its message to D.
- This causes wastage of channel capacity.

1.19.3 Near and Far Terminals :

- Now refer Fig. 1.19.3.

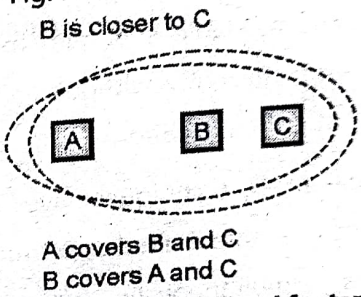

(G-3135) Fig. 1.19.3 : Near and far terminals

- Mobile stations A and B are both transmitting with the same transmission power.
- B is closer to C as compared to A. Therefore, the strength of B at C will be higher than that of A.
- Therefore at C, B's signal drowns out A's signal and therefore, C cannot receive A's transmission.
- Now consider that C is working as an arbiter for sending rights (e.g., C acts as a base station that coordinates the media access).
- Here, terminal B has already drowned out terminal A on the physical layer.
- Hence, station C would not have any chance of applying a fair scheme as it would only hear B.
- This problem is known as the near-far effect which is a severe problem of wireless networks using CDM.

- Signals from all the stations should arrive at the receiver with more or less the same strength.
- Even if we allot different codes to the senders, the closest one would simply drown out the others.
- In order to solve this problem, and receive all senders, a precise power control is needed at a receiver.

1.20 Multiple Access Protocols :

Principle :

- A wireless system which provides simultaneous communication links to many subscribers does not have unlimited spectrum available.
- In fact only a fixed limited finite amount of radio spectrum (or number of channels) is available to provide service to multiple users simultaneously.
- Therefore, the available spectrum must be utilized optimally and efficiently without compromising on the quality of communication.
- The multiple access techniques have been developed to share the available limited spectrum among many subscribers simultaneously for achieving high subscriber capacity and desired quality of communications.
- Various multiple access techniques used in wireless communications, are : Frequency-Division Multiple Access (FDMA), Time-Division Multiple Access (TDMA), Spread-Spectrum Multiple Access (SSMA) and Space-Division Multiple Access (SDMA).
- The objective of all these multiple access strategies is to maximize the spectrum utilization.
- The choice of an access method will greatly affect the capacity and quality of service provided by a wireless network.
- The practical wireless communication systems use a combination of one or more of these multiple access strategies.

1.20.1 Multiple Access Techniques :

Definition :

- The multiple access techniques are the techniques in which the total bandwidth of the common link is shared in the frequency domain, time domain or through codes.

Need of multiple access :

- A multiple access technique is not necessary if we have only one user.
- But if there are multiple users who need to share a wireless communication system, then we need to use a multiple access system.

Classification of multiple access techniques :

- Depending on the method of sharing there are five multiple access techniques as given below :
  1. FDMA : Frequency Division Multiple Access.
  2. CDMA : Code Division Multiple Access.
  3. TDMA : Time Division Multiple Access.
  4. SDMA : Space Division Multiple Access.
- Fig. 1.20.1 shows the classification of multiple access techniques.

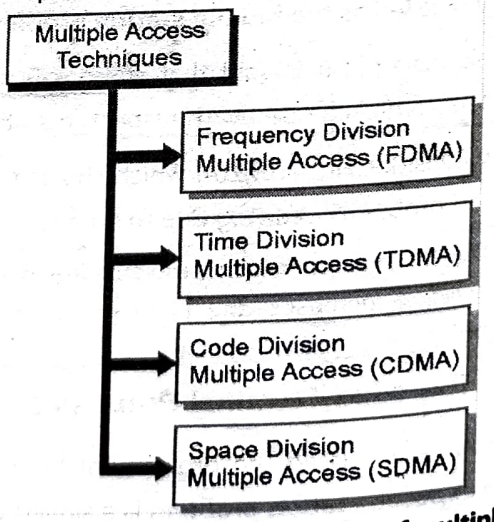

(O-1434(b)) Fig. 1.20.1 : Classification of multiple access techniques

1. Frequency Division Multiple Access (FDMA) :

- In Frequency Division Multiple Access (FDMA), a different frequency band is assigned to individual users. All users transmit simultaneously.

2. Time Division Multiple Access (TDMA) :

- In the Time Division Multiple Access (TDMA) system a separate time slot is allotted to each user and only one user is allowed to transmit or receive at any instant of time.

3. Code Division Multiple Access (CDMA) : Allows Multiple node to share same freq band

- In Code Division Multiple Access (CDMA) systems, the narrowband message signal is multiplied by a large bandwidth carrier called spreading signal.
- In CDMA each user is given a unique code sequence or signature sequence.
- This sequence allows the user to spread the information signal across the assigned frequency band.
- In CDMA the bandwidth as well as time of the channel is shared by the user.

1.21 Space Division Multiple Access (SDMA) :

Principle :

- Space Division Multiple Access (SDMA) is a channel access method used in mobile communication systems which reuses the same set of cell phone frequencies in a given service area.
- Through the use of smart antennas with beams pointed at the direction of the mobile station, SDMA serves different users within the same region.
- Space Division Multiple Access (SDMA) is used for allocating a separated space to users in wireless networks.
- The principle of SDMA is illustrated in Fig. 1.21.1. Single users are separated in space by individual beams.

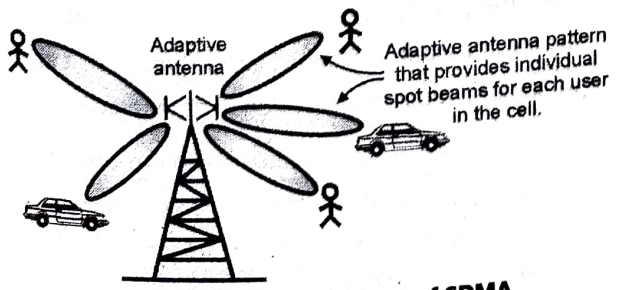

(G-1170) Fig. 1.21.1 : Principle of SDMA

- Two cells or two small regions can make use of the same set of frequencies if they are separated by an allowable distance (called the reuse distance).
- Space Division Multiple Access (SDMA) controls the radiated energy for each user in the space.
- It can be seen from Fig. 1.21.1 that SDMA serves different users by using the spot beam antennas.
- The users are thus separated in the space domain.
- These different areas covered by the antenna beams may use the same frequency or different frequencies.
- In traditional mobile cellular network systems, the base station has no information on the position of the mobile units within the cell and radiates the signal in all directions within the cell in order to provide radio coverage.
- This method results in wasting power on transmissions when there are no mobile units to reach.
- SDMA can save such wastage of power. Since the beams are focused, the radio energy frequency can have increased base station range.
- This attribute of SDMA allows base stations to have larger radio coverage with less radiated energy.
- This narrow beam width also allows greater gain and clarity.
- It also causes interference for adjacent cells that are using the same frequency, so called co-channel cells.
- Likewise, in the traditional mobile systems, at the receiver, the antenna receives signals coming from all directions including noise and interference signals.
- However, SDMA uses smart antenna technology and due to differing spatial locations of mobile units within the cell, it offer attractive performance enhancements.
- If the beam widths approach very small size, than the SDMA is called as optimal SDMA.
- As users are separated in space by individual beams, SDMA improves the overall capacity of a cell.

MAC in SDMA :

- Each mobile phone receives several base stations with different quality (signal strength).
- We can use a MAC algorithm to decide which base station is best, taking into account which frequencies (FDM), time slots (TDM) or code (CDM) are still available depending on the technology.
- Generally, SDMA is never used in isolation. It is always used in combination with one or more other schemes such as FDM, TDM etc.

1.21.1 Features of SDMA :

1. SDMA improves the transmission quality due to the use of focussed narrow transmission beams.
2. SDMA reduces the health and safety concerns.
3. It enhances the spatial efficiency.
4. Decreases the battery consumption of mobile stations.
5. With SDMA, all the mobile users within the system would be able to communicate at the same time using the same channel.
6. An important application of SDMA is sectored antennas.
7. SDMA finds its application in the mobile communication.
8. In the satellite communication.

1.21.2 Applications of SDMA :

- A typical application involves assigning an optimal base station to a mobile phone user.
- A new application of SDMA comes up together with beam-forming antenna arrays.

1.22 Frequency Division Multiple Access (FDMA) :

Principle :

- In the frequency division multiple access (FDMA), the available channel (medium) bandwidth is shared by all the mobile stations.
- That means each station will have its own specific frequency slot reserved in the entire channel bandwidth.
- So each station uses its allocated frequency band to send its data.
- Each band is thus reserved for a specific station, e.g. the frequency band f_0 to f_1 is for station-1, then f_2 to f_3 is for station-2 and so on.

Concept :

- The concept of FDMA is illustrated is Fig. 1.22.1.

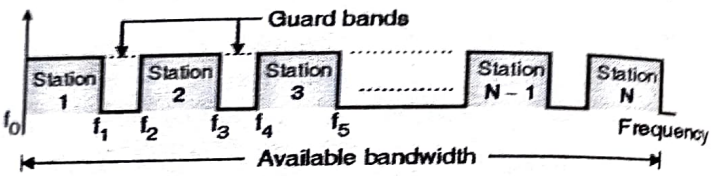

(L-739) Fig. 1.22.1 : Concept of FDMA

- **Guard bands** are provided in between the adjacent frequency slots. e.g. $(f_1 - f_2)$ is a guard band between the bands allotted to stations 1 and 2. Guard bands avoid the adjacent channel interference.
- FDMA is used in cellular phones and satellite networks.
- An FDMA/FDD system (FDD is frequency division duplex) used in mobile phones; each user is assigned a pair of frequencies, one for the forward channel and other for the reverse channel.

1.22.1 FDM and FDD :

- In mobile communication, the base station as well as mobile stations want to access the medium simultaneously.
- We can use FDM to allow such simultaneous access to the medium by base station and mobile station in cellular networks.
- Here the pair of base station and mobile station will establish a duplex channel, i.e., a channel that allows for simultaneous transmission in both directions.
- The transmission from mobile station to base station is called as **up-link** transmission, whereas, the transmission from base station to mobile station is called as **down-link** transmission.

- The up-link and down-link frequencies are different from each other.
- This scheme is then called Frequency Division Duplex **(FDD).**
- Again, both stations must know the frequencies in advance; they cannot just listen into the medium.
- Refer Fig. 1.22.2 to understand FDM and FDD, which shows the situation in a GSM mobile phone network for 900 MHz.

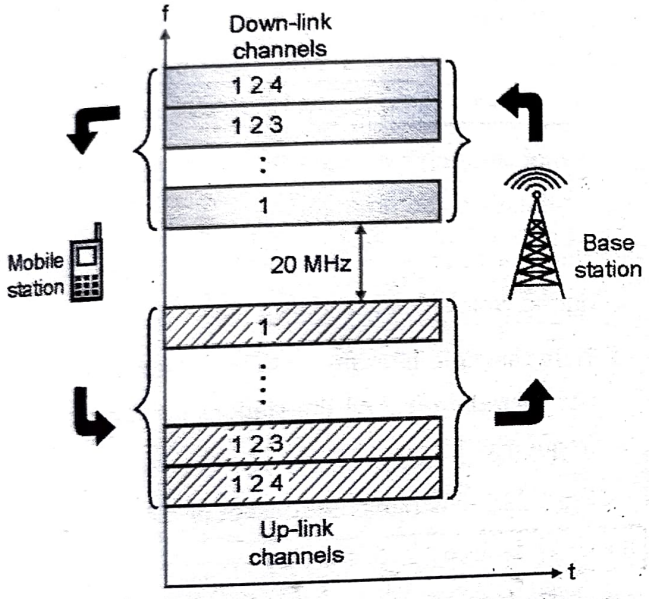

(G-3136) **Fig. 1.22.2 : FDM for multiple access and duplex**

- The basic frequency allocation scheme for GSM is fixed and regulated by national authorities.
- The frequency band allotted to the uplinks is between 890.2 and 915 MHz, whereas, all downlinks use the frequency band from 935.2 to 960 MHz.
- According to the principle of FDMA, the base station in Fig. 1.22.2, allocates a certain frequency for up and downlink and establishes a duplex channel with a mobile phone.
- In GSM, there are 124 channels available in each direction that are multiplexed using FDM.
- Thus we can use FDM for multiple access and duplex according to a predetermined scheme.
- Similar FDM schemes for FDD are implemented in some other mobile communication systems like the AMPS, IS-54, IS-95, IS-136 etc.

1.22.2 Features of FDMA :

- The features of FDMA are as follows :

1. The overall channel bandwidth is being shared by the multiple users. Therefore a number of users can transmit their information simultaneously.
2. If a FDMA channel is not in use, it will be idle and cannot used by any other user. Therefore FDMA does not utilize the available spectrum efficiently.
3. If a frequency band (channel) is assigned to a user in FDMA, then the mobile unit and the base station start transmitting simultaneously.
4. The adjacent frequency bands in the FDMA spectrum are likely to interfere with each other. Therefore it is necessary to include the guard bands between the adjacent frequency bands.
5. FDMA needs near to ideal RF filtering to reduce the adjacent channel interference.
6. The mobile unit based on FDMA needs to use a duplexers in order to isolate signals from the transmitter and receiver operating simultaneously.
7. No code words and synchronization is not required.
8. Power efficiency is reduced.
9. FDMA is an old and proven system and is used for the analog signals.
10. The complexity of FDMA systems is less.
11. FDMA is a continuous transmission method. So few bits are required for overhead purposes (like synchronization and framing bits).

1.22.3 Nonlinear Effects in FDMA :

- In a FDMA system, the same antenna is being shared by many channels at the base station.
- The power amplifiers or the power combiners are nonlinear because they are being operated at or near saturation to obtain maximum power efficiency.

- These nonlinearities result in signal spreading in the frequency domain and generate the so called Inter Modulation (IM) frequencies.
- Inter modulation is the process of the generation of undesirable harmonics. These harmonics will be outside the mobile radio band as well as inside it.
- These frequencies are undesired RF radiation which can interfere with other channels in the FDMA systems.
- Thus spreading of the spectrum results due to nonlinearity of power amplifiers.
- This results in adjacent-channel interference.
- Harmonics generated outside the mobile radio band would cause interference to the adjacent mobile services, while those present inside the band cause interference to other users in the mobile system .

Guard bands :

- In order to avoid the effects of nonlinearity, **guard bands** are introduced in between the adjacent channels.

However introduction of guard bands reduces the spectrum efficiency of FDMA system because guard bands do not carry any information.

1.22.4 Merits of FDMA :

1. All the stations can operate continuously all 24 hours without having to wait for their turn to come.
2. The power required for transmission depends on the number of channels being transmitted.
3. The signal to noise ratio is improved due to the use of FM.
4. No synchronization is necessary.
5. FDMA is a less complex system.

1.22.5 Demerits of FDMA :

1. Each channel can use only a part of the total bandwidth.
2. In spite of guard bands being provided, there is some adjacent channel interference present.
3. Due to the nonlinearity of the system the inter modulation products are generated.
4. It can process only one phone circuit at a time.
5. The cell site cost of FDMA systems is high.
6. The bandwidth of FDMA channels is narrow.

1.23 Time Division Multiple Access (TDMA) :

Principle :

- TDMA stands for Time Division Multiple Access. In TDMA, the entire bandwidth can be used by every user (mobile station) but not simultaneously.
- A mobile station can use the entire bandwidth only for the allocated time slot.
- Thus each channel is allocated a time slot only during which it can send its data.
- Thus the time is shared, but the frequency band is not shared. In fact all the stations can use the same frequency.
- Fig. 1.23.1 illustrates the concept of TDMA.

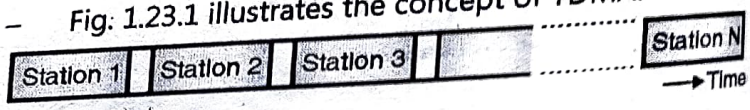

(L-740) **Fig. 1.23.1 : Concept of TDMA**

- **Guard times** are introduced between the adjacent time slots in order to prevent any cross talk. No data transmission takes place during the guard times.
- Thus TDMA systems transmit data in a buffer-and-burst method, and the transmission for any station is discontinuous.
- This means that, TDMA is more useful for digital data we need to use some digital modulation with it. TDMA finds its application in cellular phones and satellite networks.
- As all users use the same frequency, the transmitters and receivers are very simple and many different algorithms exist to control medium access.
- However, for proper operation of TDMA system, synchronization between sender and receiver has to be achieved in the time domain.

1.23.1 TDMA and MAC :

- It is difficult to listen to different frequencies at the same time but listening to many channels separated in time at the same frequency is simple.
- Almost all MAC schemes for wired networks work according to this principle, e.g., Ethernet, Token Ring, ATM etc.

Synchronization :

- It is necessary to synchronize the sender and receiver in the time domain which can be done by using a fixed pattern similar to FDMA techniques.
- For synchronization, either a certain fixed time slot is allocated for a channel, or a dynamic allocation scheme is used.
- In the dynamic allocation schemes an identification for each transmission is required similar to that for typical wired MAC schemes (e.g. sender address).
- It is possible to use MAC addresses as identification. This will enable a receiver to understand if it really is the intended receiver of a message.
- The fixed allocation schemes do not need any identification, but they are not as flexible as the dynamic schemes.
- In the following sections we will discuss several examples for fixed and dynamic schemes used for wireless transmission.
- It is possible to combine these schemes with FDMA to achieve even greater flexibility and transmission capacity.

TDMA Features :

- The features of TDMA are as follows :
  1. TDMA is used for the transmission of data and digital voice signals.
  2. It is necessary to include "guard times" between the adjacent channels for reducing the cross talk.
  3. Synchronization is necessary in TDMA.
  4. Power efficiency of TDMA is better than that of the FDMA.
  5. TDMA is a method of time division multiplexing the digitally modulated carriers between various earth stations in a satellite network through a common satellite transponder.
  6. Each earth station transmits a **short burst** of digitally modulated carrier during the time slot assigned to it in the TDMA frame.
  7. Since TDMA uses different time slots for transmission and reception, the duplexers are not required to be used.
  8. The number of time slots in a TDMA system is determined by parameters like bandwidth, modulation method etc.
  9. As TDMA transmits data in bursts and not continuously, the battery consumption is reduced considerably.
  10. In TDMA, the handoff process is simple.

Advantages of TDMA :

1. At any instant of time, the carrier from only one station is present at the transponder. This reduces the intermodulation distortion.
2. TDMA is suitable for transmission of digital information.
3. It is possible to store the digital information, change the rate etc. in TDMA.

Advantages of TDMA over FDMA :

- The advantages of TDMA over FDMA are as follows :
  1. In TDMA since only one station is present at any given time, the intermodulation products will not get generated.
  2. The entire channel bandwidth can be allotted to a single channel at given instant of time. This is particularly advantageous for the digital channels which demand larger bandwidths.
  3. The frequency selective fading does not affect the TDMA to the extent it affect the FDMA.

4. TDMA is well suited for the digital signals therefore it can be easily used for data transmission.
5. As only one channel is being transmitted at a time it is not necessary to separate out various channels at the receiver.

Disadvantages of TDMA :

1. Precise synchronization is required.
2. Bit and frame timing must be achieved and maintained.

1.23.2 Fixed TDM :

- Fixed TDM is the simplest of all the TDM algorithms where, time slots for channels are allocated in a fixed pattern.
- This is a typical solution for wireless phone systems which results in a fixed bandwidth.
- MAC is quite simple, because, the only crucial factor is to access the reserved time slot at the correct instant of time.
- No interference will occur if this synchronization is assured because each mobile station knows its turn (time slot).
- The base station assigns the fixed pattern because the base station solves the competition between different mobile stations that want to access the medium.

Advantages of fixed TDM :

- Following are the advantages of fixed TDM :
  1. Fixed access patterns is very well suited for the connections with a fixed bandwidth.
  2. The other advantage of these patterns is that they guarantee a fixed delay.

Applications of fixed TDMA :

- The fixed access pattern TDMA schemes are used for many digital mobile phone systems like IS-54, IS-136, GSM, DECT, PHS and PACS.

TDMA and TDD :

- Fig. 1.23.2 shows the use of fixed TDM patterns to implement multiple access and a duplex channel between a base station and mobile station.

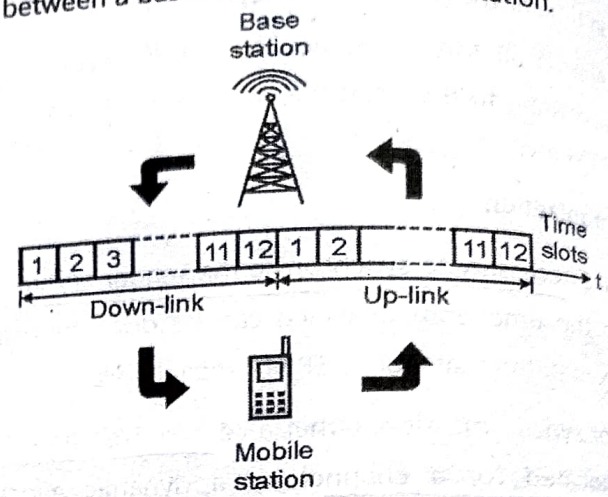

(G-3137) **Fig. 1.23.2 : TDM for multiple access and duplex**

- The transmission from mobile station to base station is called as **up-link** transmission, whereas, the transmission from base station to mobile station is called as **down-link** transmission.
- Here, the up-link and down-link frequencies are same but the transmission takes place in different time slots.
- This scheme is then called Time Division Duplex **(TDD).**
- As shown in Fig. 1.23.2, there are 12 down-link time slots and 12 up-link time slots.
- The base station uses one of the 12 slots allocated for the downlink, whereas the mobile station uses one of 12 slots allocated for the uplink.
- Thus this scheme allows the use of up to 12 different mobile stations at the same frequency without any interference.
- The problem with this general scheme is that it wastes a lot of bandwidth.
- It is also too static and too inflexible for data communication.
- In this case, connectionless, demand-oriented TDMA schemes can be used, as the following sections show.

1.23.3 Classical Aloha :

- As mentioned earlier, TDMA consists of all the mechanisms to control medium access according to TDM.
- But what happens if we apply TDM without controlling access ?
- The classic Aloha scheme does exactly this. This scheme was used in the ALOHANET to connect various stations in a wireless manner.
- Classical Aloha does not coordinate medium access and it does not resolve contention on the MAC layer.
- In this scheme, as shown in Fig. 1.23.3, each station can access the medium at any time.

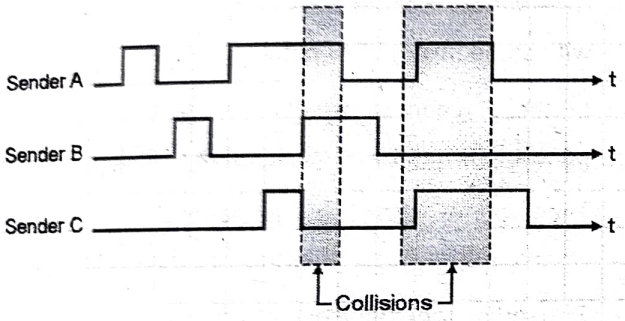

(G-3138) Fig. 1.23.3 : Classical Aloha multiple access

- Classical Aloha is a random access scheme. It does not have a central arbiter to control access and there is no coordination among the stations.
- If two or more stations transmit simultaneously on the common medium, a collision occurs and the transmitted data is destroyed.
- This problem can be solved by retransmitting the destroyed data, but it is left to higher layers.
- The classical Aloha is also called as simple Aloha. It works well for a light load and does not require any complicated access mechanisms.
- The maximum throughput achieved by this scheme is at 18 percent load.

1.23.4 Slotted Aloha :

- The slotted Aloha scheme provides the first refinement of the classical Aloha scheme by introducing the time slots.
- In slotted Aloha, it is essential that all senders be synchronized and as shown in Fig. 1.23.4, transmission can only start at the beginning of a time slot.

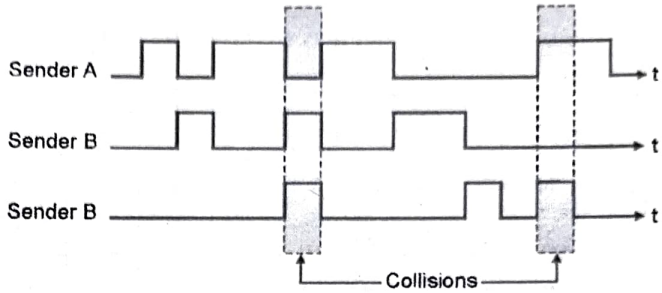

(G-3139) Fig. 1.23.4 : Slotted Aloha multiple access

- Still, access is not coordinated.
- Due to the introduction of slots the throughput of slotted Aloha increases to 36 percent from 18 percent, i.e., slotting doubles the throughput.
- Both the basic Aloha principles are used in many systems that implement distributed access to a medium.
- Classical and slotted Aloha systems work well under a light load, but they cannot give any of the following hard transmission guarantees :
  1. Maximum delay before accessing the medium.
  2. Minimum throughput.
- Therefore it is necessary to have additional mechanisms, such as combination of fixed schemes and Aloha schemes.
- However, the mobile communication systems like UMTS rely on slotted Aloha for medium access in certain situations.

1.23.5 Carrier Sense Multiple Access (CSMA) :

- CSMA scheme improves the basic Aloha scheme by introducing the sensing of carrier before accessing the medium.
- In CSMA scheme the sender first senses the carrier (to check if medium is idle) and accesses the medium only if the carrier is idle.
- This decreases the probability of a collision.

- However, as discussed in hidden terminal problem, if a hidden terminal transmits at the same time as another sender, an undetected collision might occur at the receiver.
- The basic CSMA scheme is still used in most wireless LANs.
- There are several versions of CSMA as follows :
  1. Non-Persistent CSMA.
  2. 1-Persistent CSMA.
  3. P-Persistent CSMA.

Non-Persistent CSMA :

- In the non-persistent CSMA scheme, if a station wants to transmit a frame and it finds that the channel is busy (some other station is transmitting) then it will wait for fixed interval of time.
- After this time, it again checks the status of the channel and if the channel is free it will transmit.

1-Persistent CSMA :

- In this scheme the station which wants to transmit, continuously monitors the channel until it is idle and then transmits immediately.
- The disadvantage of this strategy is that if two stations are waiting then they will transmit simultaneously and collision will take place. This will then require retransmission.

P-Persistent CSMA :

- The possibility of such collisions and retransmissions is reduced in the p-persistent CSMA.
- In this scheme all the waiting stations are not allowed to transmit simultaneously as soon as the channel becomes idle.
- A station is assumed to be transmitting with a probability "p".
- For example if p = 1/6 and if 6 stations are waiting then on an average only one station will transmit and others will wait.
- We can introduce some fairness for stations wa for a longer time, by using the **back-off** algorit which are sensitive to waiting time.
- The wireless LANs following the standard IEEE 80 use CSMA with collision avoidance (CSMA/ access scheme.
- In this scheme, sensing the medium is combi with a back-off scheme in case of a busy medium

1.23.6 Demand Assigned Multiple Access (DAMA) :

- It is possible to achieve some improvement in Al access systems performance by using **reservation mechanisms** or by using combinati with some (fixed) TDM patterns.
- In these schemes we typically have a reservati period followed by a transmission period.
- The stations can use the reservation period, reserve future slots in the transmission period.
- Depending on the scheme, there is a possibility collisions occurring during the reservation perio but, the transmission period can then be access without collision.
- Alternatively, it is possible to split the transmissio period into periods with and without collision.

Advantage :

- The advantage of DAMA is higher throughput due t less collisions.

Disadvantage :

- The disadvantage of DAMA is that these scheme cause a higher delay under a light load (first th reservation has to take place.

Application :

- The Demand Assigned Multiple Access (DAMA) is also called as reservation Aloha, and it is used i satellite systems.

Modes in DAMA :

- DAMA has two modes as shown in Fig. 1.23.5 : Contention mode and reservation mode.

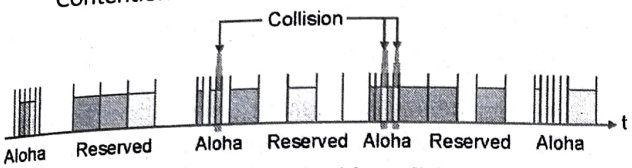

(G-3155) Fig. 1.23.5 : DAMA with explicit reservation

- All the earth stations in a satellite system can try to reserve future slots during a contention phase following the slotted Aloha scheme.
- That means different earth stations will try to reserve access time for satellite transmission.
- Collisions can take place during the reservation phase as well but, they do not destroy data transmission.
- At most these collisions can destroy the short requests for data transmission.
- If reservation process is successful, then a time slot in the future is reserved, and during which no other station is allowed to transmit.
- Then, the satellite will collect all successful requests (that are not destroyed) and will send back a reservation list to all the earth stations.
- All ground stations have to obey this list.
- The fixed TDM pattern of reservation and transmission can be maintained by synchronizing the stations from time to time.
- DAMA is an explicit reservation scheme where it is necessary to reserve each transmission slot explicitly.

1.23.7 Packet Reservation Multiple Access (PRMA) :

- Packet Reservation Multiple Access (PRMA) is an example for an implicit reservation scheme.
- Here, the time slots can be reserved implicitly according to the following scheme.
- Refer Fig. 1.23.6 to understand PRMA concept. Here, each frame is made of 8 time slots.

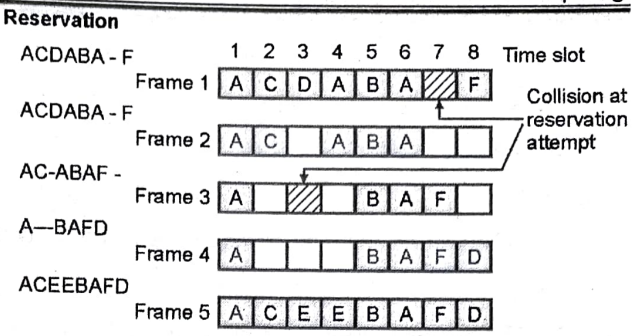

(G-3140) Fig. 1.23.6 : PRMA with implicit reservation

- The frame is repeated in time to form frames one to five in Fig. 1.23.6, i.e., a fixed TDM pattern is applied.
- A base station in case of a mobile system or a satellite in a satellite system now broadcasts the status of each slot as shown on the left side of the figure to all mobile stations or earth stations.
- All the stations that receive this vector then know which slot is occupied and which one is currently free.
- In Fig. 1.23.6, a successful transmission of data is indicated by the station's name (A to F).
- Now consider the first frame in Fig. 1.23.6 where, the base station broadcasts the reservation status **'ACDABA-F'** to all stations, from A to F.
- This reservation status indicates that the first six slots and the eighth slot are occupied, but slot seven is free in the following transmission.
- All mobile stations that wish to transmit can now compete for this free seventh slot in Aloha fashion.
- Therefore, more than one station wants to access this slot and as shown in Fig. 1.23.6, a collision occurs.
- The base station returns the reservation status 'ACDABA-F' to all the mobile/earth stations which indicates that the reservation of slot seven failed.
- Therefore, this slot is still indicated as free and that nothing has changed for the other slots.
- Again, stations can compete for this slot.
- Now refer to the second frame in which slot seven is free and in addition, stations D and F have stopped sending in slots three eight respectively.

- Therefore, before the third frame starts, the base station indicates in the reservation status 'AC-ABAF-' that slots three and eight are now idle.
- This also shows that the seventh slot in frame two has been successfully reserved by station F.
- PRMA scheme constitutes one more combination of fixed and random TDM schemes with reservation.
- Also observe from Fig. 1.23.6 that, as soon as a station succeeds with a reservation, all future slots are implicitly reserved for this station. (e.g. station F in slot seven).
- Here, the slotted aloha scheme is used only for the idle slots and destruction of data transmission does not take place due to collision.

1.23.8 Reservation TDMA :

- Refer Fig. 1.23.7 which demonstrates the reservation TDMA scheme which is based on even more fixed pattern that still allows some random access.

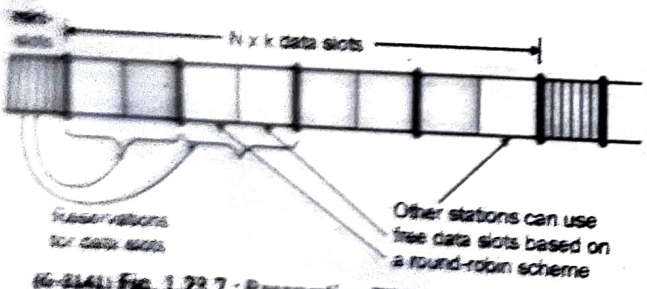

(G-3141) Fig. 1.23.7 : Reservation TDMA access scheme

- In a fixed TDM scheme one frame consists of N mini-slots followed by N×k data-slots. This frame is then repeated.
- A mini-slot is allotted to each station which can be used to reserve up to k data-slots.
- Due to this each station is guaranteed with a certain bandwidth and a fixed delay.
- The other stations can use the unused data-slots to send their data.
- These channels can use the free slots based on a simple round-robin scheme or can be uncoordinated using an Aloha scheme.

1.23.9 Multiple Access with Collision Avoidance (MACA) :

- Earlier in this chapter we have discussed the hidden terminal problem. How do the previous access schemes solve this ?
- For all schemes with central base stations assigning TDM patterns, the problem of hidden terminals is unknown.
- This is because, if the terminal is hidden for the base station, there is no communication between them anyway.
- However as mentioned earlier, more or less fixed access patterns are not as flexible as Aloha schemes.
- What will happen when there is no base station at all ? This is the case in ad-hoc networks which do not have a base stations.
- The hidden terminal problem can be solved by simple scheme called Multiple Access with Collision Avoidance **(MACA).**
- MACA does not need a base station, and it is random access Aloha scheme with dynamic reservation.
- Fig. 1.23.8 shows the same scenario as Fig. 1.19 with the hidden terminal problem and how MACA can avoid it.

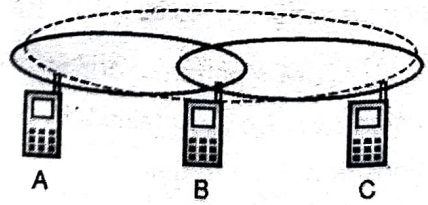

(G-3142) Fig. 1.23.8 : MACA can avoid hidden terminals

- In Fig. 1.23.8, both A and C want to send the transmission to B. But A is hidden for C therefore C unaware of A's transmission.
- Therefore A and C both transmit simultaneously thereby causing a collision at B.

MACA solves hidden station problem :

- When we use MACA protocol, the operation is modified as follows :
- Station A does not start transmitting at once, but sends a Request To Send **(RTS)** signal first.

- This RTS signal contains the name of sender and receiver, as well as the length of the future transmission.
- B receives this RTS and in response transmits the Clear To Send **(CTS)** signal in all directions.
- The CTS contains the names of sender (A) and receiver (B) of the user data, and the length of the future transmission.
- This RTS sent by A is not heard by C, but it hears the CTS signal sent by B. After receiving a CTS, C understands that A is already transmitting.
- Hence C is not allowed to send anything for the duration indicated in the CTS toward B.
- Thus, MACA solves the hidden station problem and prevents any congestion occurring due to it.
- However collisions can still take place at B when the RTS signals are sent by A and C simultaneously to B.
- However, RTS is very short as compared to the data transmission. Hence, the probability of RTS collision is much lower.
- If B receives RTS from A and C at the same time, it resolves this contention and acknowledges only one station in the CTS.
- The station mentioned in CTS starts the data transmission on receiving the CTS.
- No station is allowed to transmit without an appropriate CTS.
- The MACA medium access scheme is one of the schemes that is optionally used in the standard IEEE 802.11.

MACA solves exposed station problem :

- Let us see how MACA can also help to solve the 'exposed terminal' problem.
- Consider a situation where, B wants to send data to A and C to someone else.
- But C is senses the medium before transmitting, and finds that the medium is busy due to the transmission from B and C will restrain from transmission.
- When MACA is used, the first step is, B transmits RTS containing the name of the receiver (A) and the sender (B) as shown in Fig. 1.23.9.

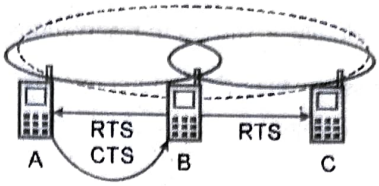

(G-3143) Fig. 1.23.9 : MACA can avoid exposed terminals

- A and C both receive the RTS from B. But C does not react to this message as its name is not mentioned in The RTS.
- However, A responds to this RTS by sending its CTS which identifies B as the sender and A as the receiver of the following data transmission.
- Now, C does not receive this CTS and concludes that A is outside the detection range.
- Now, C can start its transmission assuming it will not cause a collision at A.
- MACA thus solves the problem of exposed terminals without fixed access patterns or a base station.

Disadvantages :

1. One disadvantage of MACA is the increased overheads due to transmission of RTS and CTS packets.
2. The delay added by these signals will not be negligible for short and time-critical data packets.
3. The operation of MACA is based on the assumption that the transmission and reception is symmetrical.

1.23.10 Polling :

- The polling schemes are used where, one station is to be heard by all others (e.g., the base station of a mobile phone network).
- Polling is a strictly centralized scheme which contains one master station and several slave stations.

- The master can poll the slaves according to the following different schemes :
  1. Round robin.
  2. Randomly according to reservations.
- It is possible that the master establishes a list of stations wishing to transmit during a contention phase.
- Then after the contention phase the master polls each station on the list.
- Similar schemes are used, in the Bluetooth wireless LAN and as one possible access function in IEEE 802.11 systems.

1.23.11 Inhibit Sense Multiple Access (ISMA) :

- The Inhibit Sense Multiple access (ISMA) represents another combination of different schemes. It is also known as Digital Sense Multiple Access (DSMA).
- This scheme is used for the packet data transmission service Cellular Digital Packet Data (CDPD) in the AMPS mobile phone system.
- Refer Fig. 1.23.10. In ISMA scheme, the base station only sends a busy tone to signal the mobile stations that the medium is busy. The busy tone is also called BUSY / IDLE indicator.

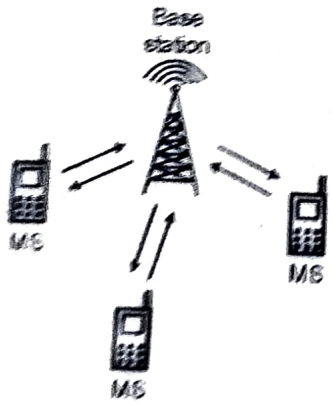

(E-3144) Fig. 1.23.10 : Inhibit Sense Multiple Access using a busy tone

- After the busy tone stops, the mobile stations can access the up-link without any further coordination.
- Every successful transmission is acknowledged by the base station.
- If a positive acknowledgement is missing, then the mobile station understands that a collision has occurred. Additional back-off and retransmission mechanisms are implemented if a collision occurs.

1.23.12 Problems with FDMA and TDMA :

- The problem with the FDMA and TDMA system is that, the channel is basically divided into independent sub-channels.
- That means each sub-channel in the FDMA is allotted to a single user and each time slot in TDMA has been allotted to a separate single user.
- The FDMA and TDMA systems however prove to be inefficient when the data from the users is bursty in nature as shown in Fig. 1.23.11.

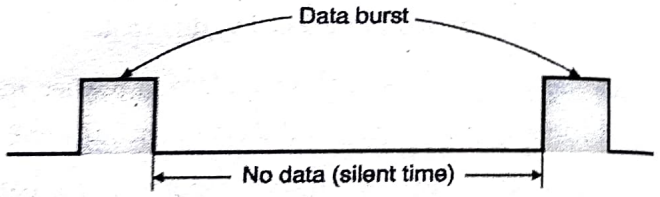

(E-906) Fig. 1.23.11 : Bursty data signal with low duty cycle

- This type of data has low value of duty cycle. i.e. the time for which data is being transmitted is much shorter than the time for which data is not being transmitted.
- Under such circumstances where the transmission from different users is bursty and low duty cycle, the FDMA and TDMA system will not be very efficient.
- A large percentage of the available time or frequency slots do not convey any information and therefore are wasted.
- Such a type of data is observed in computer communication networks and to some extent, in the mobile cellular communication systems carrying digitized voice.

1.24 Code Division Multiple Access (CDMA) :

Concept :

- An alternative to FDMA and TDMA is an another system called Code Division Multiple Access (CDMA).

- In CDMA more than one user is allowed to share a channel or sub channel with the help of Direct-Sequence Spread Spectrum (DS-SS) signals.
- In CDMA each user is given a unique code sequence or signature sequence.
- This sequence allows the user to spread the information signal across the assigned frequency band.
- At the receiver the signal is recovered by using the same code sequence.
- At the receiver, the signals received from various users are separated by checking the cross-correlation of the received signal with each possible user signature sequence.
- In CDMA the users access the channel in a random manner. Hence the signals transmitted by multiple users will completely overlap both in time and in frequency.
- The CDMA signals are spread in frequency. Therefore the demodulation and separation of these signals at the receiver can be achieved by using the pseudorandom code sequence.
- CDMA is sometimes also called as Spread Spectrum Multiple Access (SSMA).
- In CDMA as the bandwidth as well as time of the channel is being shared by the users, it is necessary to introduce the guard times and guard bands as shown in Fig. 1.24.1.

Guard time → Crosstalk
Guard Band → Adj channel IF

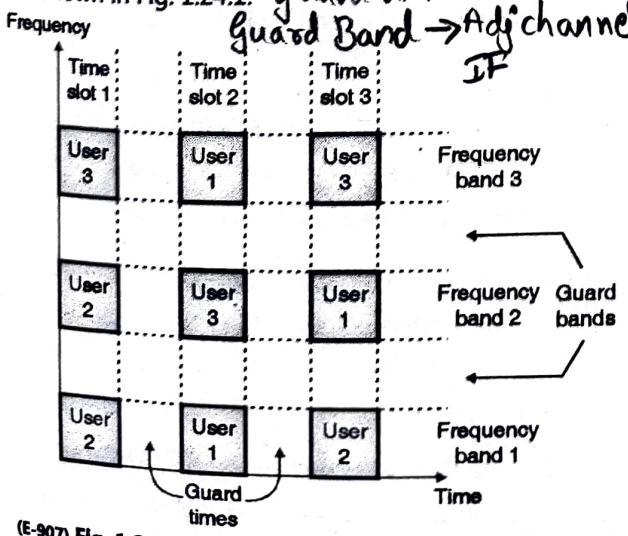

(E-907) Fig. 1.24.1 : Structure of CDMA showing the guard bands and the guard times

- CDMA does not need any synchronization, but the code sequences or signature waveforms are required to be used.
- In CDMA one channel carries all the transmission simultaneously.
- As the same channel is used by several users, there may be a problem of **near-far effect**.
- The near-far problem occurs if the power of each user within the cell is not controlled such that they appear equal at the base station.
- To minimize the near-far problem power control is essential in CDMA systems.
- The main advantage of CDMA when compared to other multiple access methods is reduced level of interference.

Spread spectrum and CDMA :

- The spread spectrum is the modulation technique which is highly tolerant of all types of interferences.
- The spread spectrum technique is the basis for the access technique called as spread-spectrum multiple access or Code-Division Multiple Access (CDMA).
- In CDMA multiple access technique, every transmitting individual mobile subscribers occupies the complete available frequency spectrum.
- That means, the same spectrum, at the same time can be occupied by several mobile subscribers.
- In a CDMA environment, it is possible to accomplish the mixing of different types of traffic such as voice, data, and video because subscribers do not need any specific coordination.
- The CDMA system can accommodate different subscribers having different bandwidth requirements, switching methods and technical characteristics without many problems.
- The efficient CDMA systems, implement accurate power control of mobile stations for reducing interference because each subscriber signal contributes to the interference received by other subscribers.

- In CDMA since all subscribers are using the entire spectrum, it is necessary to spread their signals with a specific PN code, in order to distinguish a subscriber signal from other signals.
- All subscribers in the CDMA transmit information simultaneously with the use of the same carrier frequency.
- Therefore each subscriber in CDMA has its own code word.
- This code word is orthogonal to code words of other subscribers.
- In order to detect the information, the receiver must know the exact code word used by the transmitter.
- The receiver performs a time correlation operation for detecting the signal.
- An interesting feature of spread spectrum modulation CDMA is that, all other code words except the intended one appear as noise.
- To minimize this noise power at the receiver end the signal power should be high.
- In CDMA, one unique code is assigned to every subscriber and different codes are used for different subscribers.
- Each subscribers uses its code to mix with each information bit before transmitting it.
- These encoded bits, can be decoded by using the same code at the receiver.
- The receiver would interpret the received information as noise if there is any mismatch between the code allotted to it and the code used by the received signal.
- The CDMA technique uses a wider frequency band for every subscriber.
- In this system, the PN code generator generates different spread-spectrum codes and these codes are assigned to each subscriber.
- In CDMA, many subscribers share the same frequency.

1.24.1 Salient Features of CDMA Systems

- Following are the important features of CD systems :

1. CDMA technique is used in some 2G dig cellular systems like IS-95 and most of the thi generation cellular systems.
2. In CDMA, many subscribers share the sa frequency in combination with FDD or TDD.
3. As the number of active subscribers is n limited, a CDMA system has a soft capacity. Wi increase in the number of active subscribers t noise floor increases in a linear way. Therefor there is no absolute limit on the number c active subscribers.
4. With increase in the number of activ subscribers, the performance of the system gradually degrades for all active subscribers.
5. As the signal in CDMA is spread over a large spectrum, multipath fading is considerably reduced.
6. The inherent frequency diversity will moderate the effects of small-scale fading because the spread spectrum bandwidth is larger than the coherence bandwidth of the channel.
7. The channel data rates in CDMA are very high. It results in the extremely short duration of the symbol or chip and typically much less than the channel delay spread.
8. In CDMA system, Multipath delayed by more than a chip will appear as noise because PN sequences have low autocorrelation.
9. In order to improve reception by collecting time-delayed versions of the required signals, a RAKE receiver can be used to improve the reception.
10. As CDMA uses co-channel cells in adjacent cells, it can use macroscopic spatial diversity scheme in order to provide soft hand-off.

11. Mobile station controller (MSC) can simultaneously monitor the signal strength of a particular subscriber from two or more base stations which allows it to perform soft hand-off if required.
12. At any time, the MSC can select the best version of the received mobile signal without the need of switching frequencies.
13. If spreading sequences of different subscribers are not exactly orthogonal then the self-jamming problem occurs.
14. If the received signal power of a required subscriber at the cell-site is less than that of the undesired subscribers then the near-far problem occurs.
15. In CDMA system, each subscriber operates independently without knowledge of other subscribers.

1.24.2 Advantages of CDMA :

- Some of the advantages of CDMA are :
  1. It does not need any synchronization.
  2. More number of users can share the same bandwidth.
  3. Sharing of bandwidth as well as time is possible.
  4. Due to codeword allotted to each user, interference (crosstalk) is reduced.

1.24.3 Disadvantages of CDMA :

1. The CDMA system is more complicated.
2. Guard band and guard time both are required to be provided.

1.24.4 CDMA Applications :

- Following are some of the important CDMA services :
  1. Voice services.
  2. Data services.
  3. Circuit switched data.
  4. Packet switched data.
  5. Message services.
  6. CDMA radio.
  7. Location based services.
  8. CDMA radio channel.

1.24.5 Spread Aloha Multiple Access (SAMA) :

- As discussed earlier, we can use different codes with certain properties for spreading data to obtain powerful multiple access scheme, namely CDMA.
- However CDMA has a disadvantage that its senders and receivers are not simple devices.
- In order to communicate with n CDMA devices we need to program the receiver to decode n different codes and send n different codes, too.
- In mobile phone systems, a lot of the complexity needed for CDMA is integrated in the base stations.
- The wireless and mobile devices communicate with the base station only and not directly with each other.
- However, the CDMA technique seems to pose too much overhead, if spontaneous, bursty traffic is to be supported between an arbitrary number of devices.
- In case of ad-hoc networks, there is no centralized base stations and mobile stations communicate directly with each other.
- Using CDMA in such a network will not be easy because, no one wants to program many different spreading codes.
- On the other hand, Aloha was a very simple scheme, but it has a problem of providing a relatively low bandwidth due to collisions.
- What will happen if the spreading of CDMA and the medium access of Aloha are combined together ?
- The result of such combination is a scheme called Spread Aloha Multiple Access (SAMA).
- SAMA is a combination of CDMA and TDMA.

Working of SAMA :

- The working of SAMA is as follows :
- Refer Fig. 1.24.2 where, each SAMA sender uses the same spreading code of 110101.

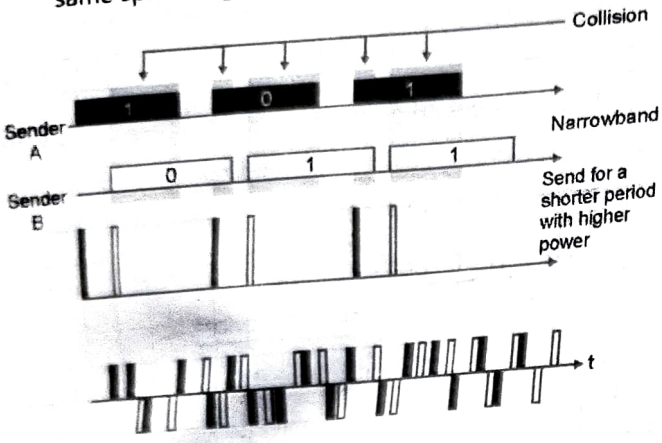

(G-3145) **Fig. 1.24.2 : Spread Aloha Multiple Access**

- The upper part of this figure shows the standard case for Aloha access.
- Here, Sender A and sender B access the medium at the same time in their narrowband spectrum, which results in collision at all three bits.
- We can send the same data using short but higher power pulses as shown in the middle.
- Now spread spectrum is used to spread these shorter signals to increase their bandwidth (spreading factor s = 6).
- The spread signal is shown at the bottom of the Fig. 1.24.2.
- It is still possible to separate the two signals if one receiver is synchronized to sender A and another one to sender B.
- The signal of an unsynchronized sender appears as noise.
- It is important that the probability of a 'collision' is quite low if the number of simultaneous transmitters stays below 0.1 – 0.2s.
- The maximum through put of this scheme is about 18 per cent, which is very similar to Aloha, but the approach has the following benefits.

Advantages of SAMA :

1. Robustness against narrowband interference.
2. Simple coexistence with other systems in the same frequency bands.

1.24.6 Comparison of Multiple Access Strategies :

Table 1.24.1 : Comparison of SDMA, TDMA, FDMA and CDMA

Sr. No.	Approach	SDMA	TDMA	FDMA	CDMA
1.	Principle	Space is segmented into cells / sectors.	Time is segmented into disjoint time-slots.	Frequency band is segmented into disjoint sub-bands.	Spectrum is spread using orthogonal codes.
2.	Terminals	Only one terminal can be active per cell / sector.	All terminals are active for short periods of time and operate at the same frequency.	Every terminal operates at its own frequency without any interruption.	All terminals can be active at the same place at the same time without interruption.
3.	Signal Separation at receiver	With help of cell structure and directed antennas.	Using synchronization in the time domain.	With help of filters in the frequency domain.	Using code and special receivers.
4.	Advantages	simple, increases capacity per km^2.	Established system, fully digital, flexible.	Simple, established, robust, no synchronization needed.	Flexible, Needs less frequency planning, soft handover.

Sr. No.	Approach	SDMA	TDMA	FDMA	CDMA
5.	Disadvantages	Inflexible, fixed antennas.	Synchronization difficult, needs guard time.	Inflexible, Inter modulation distortion, bandwidth is a scarce resource.	Complex receivers, needs more complicated power control for senders.

Review Questions

Q. 1 What is mobile computing ?

Q. 2 Why is mobile computing used ?

Q. 3 State and explain various parts of mobile computing system.

Q. 4 State the advantages of mobile computing.

Q. 5 State the limitations of mobile computing.

Q. 6 State and explain the constraints on mobile computing.

Q. 7 State and explain the applications of mobile computing.

Q. 8 Write a short note on : History of wireless communication.

Q. 9 Explain evolution of wireless communication in detail.

Q. 10 Explain the first generation of wireless communication and state its features.

Q. 11 Explain the second generation of wireless communication and state its features.

Q. 12 Explain the evolution of wireless networks from 2G to 2.5G.

Q. 13 Explain the third generation of wireless communication and state its features.

Q. 14 State the advantages and disadvantages of 3G standards.

Q. 15 State the services provided and advantages of the third generation of wireless communication.

Q. 16 Explain the fourth generation of wireless communication and state its features, advantages, disadvantages and applications.

Q. 17 State the specifications of 4G LTE.

Q. 18 Elaborate the frequency bands used in LTE technology.

Q. 19 Explain LTE network architecture.

Q. 20 Explain the LTE frame structure in detail.

Q. 21 Write a short note on : The fifth generation of wireless communication.

Q. 22 What is MAC ? Why is it needed ?

Q. 23 Why is it not possible to use the MAC schemes of wired networks for wireless networks ?

Q. 24 Explain the hidden terminal problem.

Q. 25 Explain the exposed station problem.

Q. 26 Explain the near far problem in wireless communication.

Q. 27 State different multiple access techniques.

Q. 28 Define FDMA.

Q. 29 Explain the principle of FDMA.

Q. 30 What are the disadvantages and advantages of FDMA ?

Q. 31 Explain the principle of FDM and FDD in GSM.

Q. 32 Define TDMA.

Q. 33 Explain the principle of TDMA.

Q. 34 What are the disadvantages and advantages of TDMA ?

Q. 35 Explain the principle of TDM and TDD.

Q. 36 What are the disadvantage of FDMA and TDMA ?

Q. 37 Explain the principle of fixed TDM.

Q. 38 Explain the principle of classical Aloha and slotted Aloha.

Q. 39 Write a note on CSMA.

Q. 40 Explain the principle of DAMA.

Q. 41 How does MACA solves the hidden terminal problem ?

Q. 42 How does MACA solves the exposed terminal problem ?

Q. 43 Write a note on SAMA.

Q. 44 Compare between SDMA, TDMA, FDMA and CDMA.

□□□

Unit II

Chapter 2

Mobile Telecommunication Systems

Syllabus

Introduction to cellular systems, GSM architecture, Protocols, Connection establishment, Frequency allocation, Routing, Mobility Management, Security, **GPRS and UMTS :** Architecture, Handover, Security.

Chapter Contents

2.1 Wireless Communication
2.2 Cellular Concept
2.3 Frequency Reuse
2.4 Handoff / Handover
2.5 Global System for Mobile (GSM)
2.6 GSM System Architecture
2.7 Frequency Allocation in GSM
2.8 GSM Signalling Protocol Architecture
2.9 Signal Processing in GSM
2.10 Call Establishment in GSM
2.11 Handover in GSM
2.12 Security in GSM
2.13 GSM Services
2.14 Mobility Management in GSM
2.15 GPRS (General Packet Radio Service)
2.16 Universal Mobile Telecommunication Service (UMTS) or W - CDMA
2.17 UMTS Architecture
2.18 Handover / Handoff in UMTS
2.19 UMTS Security Process

2.1 Wireless Communication :

Definition :

- Wireless communication is defined as the communication by radio waves.
- The term wireless explains the communications other than the broadcast communication, between individuals who often use portable or mobile equipment.

2.1.1 Need of Wireless Communication :

- The communication systems can be classified into two broad categories as :
  1. Wired or guided communication systems.
  2. Wireless or unguided communication systems.
- The **wired** communication systems such as conventional telephone system use some kind of wired media such as coaxial cable or optical fiber cable to inter connect its end users.
- The **wireless systems** do not use wires as the transmission media.
- Instead air acts as the communication medium and communication takes place using electromagnetic (EM) waves.
- Examples of wireless communication systems are : Satellite communication, mobile phones, wireless LAN and WAN, etc.
- The wireless communication is needed because of the reasons mentioned below :
  1. Long distance communication is difficult using wired media due to the length of wire, maintenance problems etc.
  2. One user to multiuser communication system becomes complicated using wired media. This becomes easy with wireless links.
  3. Broadcasting applications such as radio, TV etc. are possible only through wireless communication due to a large number of users. Wired communication is not possible for such application.
  4. It is easy to add new users without any additional wiring.
  5. Wireless communication is possible even if the user is moving.
  6. Using wireless LANs or wireless communication between computer and peripherals we can avoid wiring and improve reliability.

2.1.2 Wireless Communication Systems :

- Some of the wireless communication systems are as follows :
  1. Wireless LAN.
  2. Cordless telephone.
  3. Walkie-Talkie.
  4. Pagers.
  5. AC remote control.
  6. TV remote control.
  7. Cellular phones.
  8. Satellite Communication systems.
- Wireless communication is the fastest growing part of electronic communication.
- In the wireless communication systems, the signal energy propagates in the form of electromagnetic waves over the wireless media or wireless channels.
- The examples of wireless media are radio waves, microwave and infrared light.
- The wireless media does not use a conductor or wire as a communication channel. Instead it uses the air or vacuum as medium to carry the information from transmitter to receiver.
- The transmitter first converts the data signal into electromagnetic waves and transmits them using a suitable antenna.
- The receiver receives the electromagnetic waves using a receiving antenna and converts them into data signal again.

2.1.3 Important Definitions :

- Following are some of the important definitions of terms used in wireless communication systems.

1. Base station :

- It is defined as a fixed (non-moving) station in a mobile radio system, which communicates with the mobile stations as shown in Fig. 2.1.1.

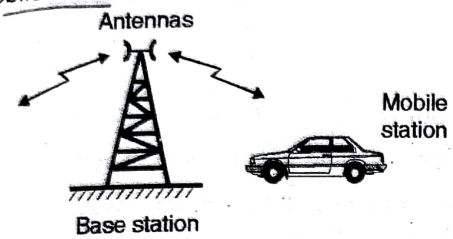

(G-1556) Fig. 2.1.1 : Base station

- Base stations are located at the center or on the edge of a region being covered.
- It consists of transmitter antenna, receiver antenna and radio channels mounted on a tower.

2. Control channel :

- It is defined as the radio channel used for transmitting the control signals such as call set up, call request, call initiation as well as the control information.

3. Forward channel :

- It is defined as the radio channel used for transmitting the information from the base station to the mobile i.e. in the forward direction.

4. Reverse channel :

- It is defined as the radio channel used for transmitting the information from a mobile to base station i.e. in the reverse direction.

5. Mobile station :

- It is defined as a station in the cellular radio service which is used when in motion at an unspecified location.
- Mobile stations can be portable hand held personal units or they can be the ones installed in vehicles.

6. Hand-off :

- It is the process of transferring the connection with a mobile station from one base station to the other when the mobile station moves from the service area of one base station into that of the other.

7. Mobile Switching Center (MSC or MTSO) :

- It is defined as the center which is set up for coordinating the routing of calls.
- An MSC is also called as MTSO i.e. Mobile Telephone Switching Office.

8. Transceiver :

- It is a unit containing transmitter as well as receiver.
- It can simultaneously transmit as well as receive.

9. Page :

- A page is defined as a small message which is broadcast over the complete service area,in the simulcast manner, simultaneously by many base stations.

10. Roamer :

- A roamer is a mobile station which operates in a service area other than the one from where the service has been subscribed.

11. Subscriber :

- We may define a subscriber as a user of a mobile communication system, who pays the subscription charges.

12. Half duplex system :

- A half duplex system is a bidirectional system i.e. it can transmit as well as receive but not simultaneously.
- At a time these systems can either transmit or receive, for example a transreceiver or walky talky set.
- The direction of communication will keep changing itself.

13. Full duplex systems :

- The full duplex systems are the truly bidirectional systems which allow the communication to take place in both the directions simultaneously.
- These systems can transmit as well as receive simultaneously, for example the telephone systems.
- The majority of electronic communication systems however are duplex in nature.
- The best example of full duplex communication system is the telephone system.
- Fig. 2.1.2 illustrates the concept of duplex communication.

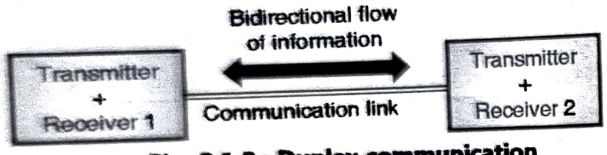

(D-5) Fig. 2.1.2 : Duplex communication

14. Simplex systems :

- The communication systems in which the information is communicated in only one direction are known as simplex systems.

15. FDD and TDD :

- In the full duplex systems simultaneous communication takes place between the base station and subscriber.
- This can be achieved by providing two simultaneous but separate channels operating at different frequency ranges as shown in Fig. 2.1.3.

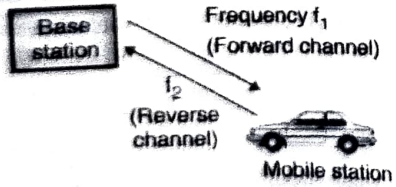

(G-1557) Fig. 2.1.3 : Concept of FDD

- This is called as **Frequency Division Duplexing (FDD).**
- Another technique used in full duplex systems is called as **Time Division Duplexing (TDD)** in which adjacent time slots on the same radio channel are allotted for the forward and reverse channels.
- Fig. 2.1.4 shows the principle of TDD.

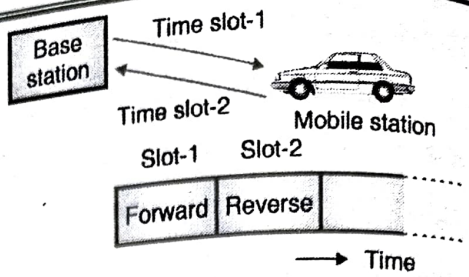

(G-1558) Fig. 2.1.4 : Concept of TDD

2.2 Cellular Concept :

Cellular concept :

- The aim of the early mobile radio system was to provide coverage to a large area with the help of single high power transmitter having an antenna mounted on a tall tower.
- This approach had the following disadvantages :
  1. Frequency reuse was not possible.
  2. Proper spectrum allocation in proportion with increasing demand was not possible.
- Hence it became necessary to restructure to radio telephone system so as to achieve the following objectives :
  1. High capacity.
  2. To utilize the available radio spectrum effectively.
  3. Coverage of large areas.
- The major breakthrough in this field was the introduction of the **cellular concept.**

Advantages of cellular concept :

- The cellular concept offered the following advantages :
  1. Improved user capacity.
  2. No spectral congestion.
  3. No major technological changes.
  4. Efficient utilization of the available spectrum.
- In the **cellular systems,** a single high power transmitter is (large cell) is replaced by many low power transmitter (small cells) as shown in Fig. 2.2.1

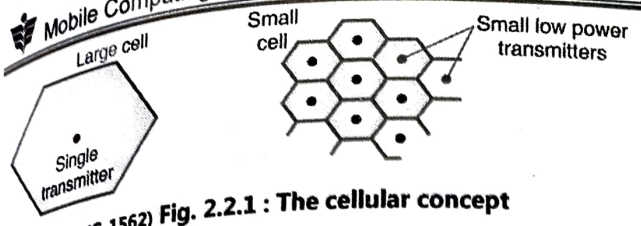

(G-1562) **Fig. 2.2.1 : The cellular concept**

- Note that each small cell provides coverage to a small portion of the entire large service area (large cell).

2.2.1 Basic Cellular System :

- Cellular telephone system is a wireless telephone system. It is a multiuser system.
- In this section we are going to study the second type of multiuser system called mobile radio system or wireless communication system.

Concept :

- Cellular phone is wireless communication just like cordless phone.
- In cell phone distance is not restricted to within home but one can travel in the city or even outside the city without interruption in communication.
- The demand for cellular mobile phone is increasing at alarming level and is likely that wired communication will be replaced by wireless technology.
- In the cellular system city is divided into small areas called 'cells'. Each cell is around 10 square kilometer (depends upon power of base station).

MTSO or MSC :

- The cells are normally thought of hexagons. Because cell phones and base stations use low power transmitters, the same frequencies can be reused in non-adjacent cell.
- Each cell is linked to central location called the Mobile Telephone Switching Office (MTSO). It is also called as Mobile Switching Center (MSC).
- MTSO coordinates all mobile calls between an area which consists of several cell sites and the central office.
- Time and billing information for each mobile unit is accounted for by MTSO.
- At the cell site base station is provided to transmit, receive and switch calls to and from any mobile unit within the cell to the MTSO.
- A cell covers only few square kilometer area, thus reducing the power requirement necessary to communicate with cellular telephones.
- In this manner heavily populated areas can be serviced by several stations, rather than one as used by conventional mobile techniques.

Cell :

- The basic geographic unit of a cellular communication system is called as a **cell**.
- Its shape is hexagonal as shown in Fig. 2.2.2(a). Cells have the base stations transmitting over small geographic areas.

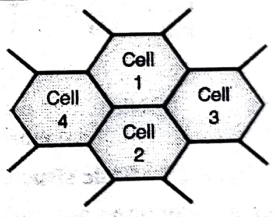

(G-1026) **Fig. 2.2.2(a) : Cell**

- The size of a cell is not fixed. Practically the shape of the cell may not be a perfect hexagon.
- The hexagonal shape has been adopted universally because it allows easy and manageable analysis of a cellular system.

Cluster :

- A group of cells is called as a **cluster**. Fig. 2.2.2(b) shows the cluster of seven cells or a seven cell cluster (n = 7).

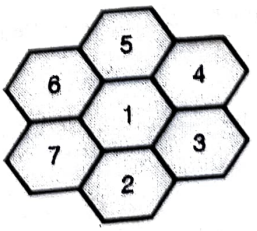

(G-1027) **Fig. 2.2.2(b) : Cluster**

- The cluster size (n) is not fixed. It depends on the requirements of a particular area.

2.2.2 Structure of Cellular Phone System :

Block diagram :

- In the communication systems discussed so far, the transmitter and the receiver both were stationary.
- In the **mobile communication** which we are going to discuss now, either the transmitter or the receiver or both are going to be movable.
- As the points between which the communication takes place are movable, the communication channel has to be air, that means it is a wireless communication.
- The structure of the mobile phone network along with the public switched telephone networks is shown in Fig. 2.2.3.

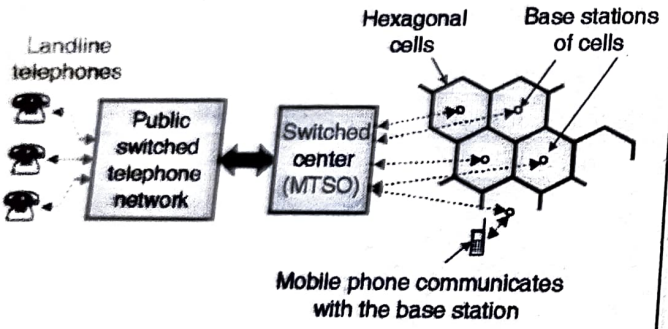

(G-1028) Fig. 2.2.3 : Basic structure of mobile telephone network

- Cellular telephone system is a wireless telephone system. It is a multiuser system.

Description :

- The mobile telephone system has hexagonal shaped cells as shown in Fig. 2.2.3. Each cell has a base station situated at the center.
- The task of the **base stations** is to act as an interface between the mobile phone and the cellular radio system.
- The base stations of all the cells are connected to the switched center **MSC**. Observe that this interface is a bi-directional one.
- That means the exchange of information between the switched center and the base stations is a two way.
- As shown in Fig. 2.2.3, the communication area of the mobile communication is divided into hexagonal cells.
- Therefore, the system is named as the **cellular radio** system.
- The switching center acts as the interface between the Public Switched Telephone Network (**PSTN**).
- In addition to that it performs the supervision and control operations in the mobile communication system.
- Due to this kind of a system layout, the communication can take place between two mobile subscribers or between a mobile subscriber and a landline telephone as well.
- If a mobile subscriber travels from one cell area to the other then it automatically gets connected to base station of that cell.
- Thus the service provided to a mobile subscriber is continuous without any break.

Functions of MTSO (MSC) :

- The MTSO control all the cells and provides the interface between each cell and the main telephone office.
- As the mobile user from one cell to the next cell, the system automatically switches from one cell to the next.
- The computer at MTSO causes transmission from the mobile user to be switched from the weaker cell to the stronger cell within a very short time.

Advantages of using MTSO (MSC) :

- There are certain advantages of using MTSO over the older MTS system :

1. It operates at a much higher frequency. So more spectrum space is available and so more number of channels can be accommodated.
2. Due to MTSO, the cellular system can use the concept of frequency reuse. This will allow the cells to use the same frequency without the fear of interference.
3. And the third advantage is that the cells of different size can be accommodated in the system.

Conditions controlled by MTSO (MSC) :

- Let us discuss the important conditions/things controlled by MTSO in the mobile phone system.

1. **Control of transmitter output power :**

- The transmitter output power is not constant but it is controllable by the cell site and MTSO.
- Special control signals picked up by the receiver are sent to an automatic power control (APC) circuit.
- The APC circuit then sets the transmitter output power to one of the eight power output levels.

2. **Monitoring of the received signal strength :**

- The MTSO monitors the strength of the received signal by checking the RSSI (received signal strength indicator) signal generated by the receiver.
- Based on this signal, the MTSO makes a decision about switching to another cell.

3. **Frequency division ratio :**

- The MTSO logic section sends the numbers corresponding to frequency division ratio.
- These numbers are loaded into the frequency divider blocks of the frequency synthesizer.
- This sets the transmit and receive channel frequencies.
- With increase in the number of users or increase in the demand for service, the number of base stations can be increased.
- The transmitter power for each base station is reduced in order to reduce the interference.
- Thus we can increase the radio capacity without any additional radio spectrum.
- This fundamental concept is used for all the modern wireless systems.

2.2.3 Advantages of Cellular Concept :

1. Only a fixed number of channels (frequency slots) are required to be used. This is because the same frequencies can be used for multiple cells due to the principle of frequency re-use.
2. Large area can be covered.
3. Low power transmitters can be used as the cell area is small.
4. Every piece of subscriber equipment (e.g. mobile handset) within a country or continent can be manufactured with the same set of channels so any mobile can be used anywhere.
5. Higher capacity.
6. Local interference only.
7. Robustness to failure at single component.
8. No technological challenges in deployment.

2.2.4 Hexagonal Cell Geometry :

- The signal strength decreases as it travels away from the base station.
- The **coverage area** of a BS is defined as the region over which the signal strength is higher than the threshold value say X dB.
- If the antenna at BS is assumed to be isotropic then the coverage area must be a circular region.
- **Footprint** is defined as the actual radio coverage of a cell.
- We can find out the footprint either from the field measurements or the propagation prediction models. Fig. 2.2.4 shows the footprints of different cells present in the same geographical area.

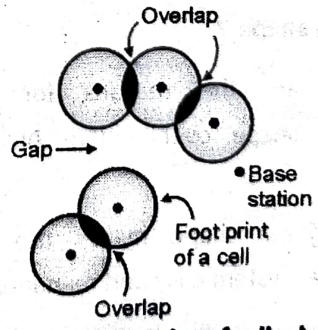

(G-2663) Fig. 2.2.4 : Footprint of cells showing the overlaps and gaps

- As shown in Fig. 2.2.4 there may be an overlap between the adjacent circular coverage areas or there may be a gap between the coverage areas of two adjacent cells.

- Therefore we cannot use such a circular geometry, as a regular shape to describe cells.
- It is important that for the cells of same shape in the same geographical area, there are no ambiguous areas belonging to multiple cells or to no cell.
- These requirements are satisfied if each cell is having one of the following shapes : equilateral triangle, square or regular hexagon.
- Fig. 2.2.5 demonstrates the triangular and square shapes of the cell whereas Fig. 2.2.6 shows the hexagonal cells.

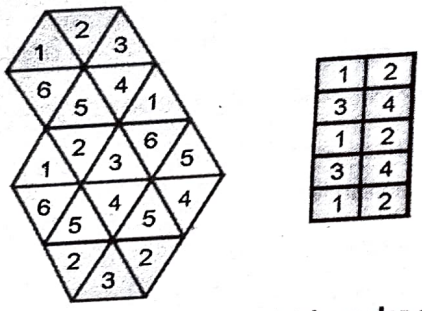

(G-2660) Fig. 2.2.5 : Square and triangular cells

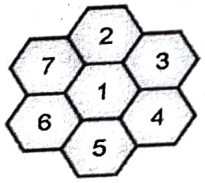

(G-2661) Fig. 2.2.6 : Hexagonal cells

- Out of these shapes, the hexagonal cell is the closest approximation of a circle. It is used for the cellular system.

Why hexagonal shape ?

- Following are the reasons for selecting the hexagonal shape over square or triangular cell shape :
  1. Hexagonal shape makes the analysis of a cellular system easy and manageable.
  2. The circular cell pattern allows either overlap or gaps in the adjacent cells. This is avoided if hexagonal shape is selected.
  3. A hexagon closely approximates the circular radiation pattern and provides greater coverage without creating ambiguous areas.
  4. With the hexagon used as cell geometry, we need less number of cells to cover a large area as compared to the triangular or square cell geometry.
- It is not mandatory to place the BS always at the center of the cell. If the BS is at the center of a cell then it is called as a center-excited cell.
- Sometimes the directional antennas are placed in corner excited cell for better coverage at the edges of the cell whereas the omni-directional antennas are used in centre excited cells.

2.3 Frequency Reuse :

Concept :

- In frequency reuse concept the radio channels use the same frequency to cover different areas that are physically separate from each other.
- In frequency reuse it is necessary to see that the co-channel interference is not objectionable.
- Frequency reuse is an important concept because in this a single transmitter of higher power need not be used to cover the entire area.
- Instead many transmitter of small output power operating at the same frequency can be used.
- This technique also reduces the minimum height of the transmitting antenna, because now each antenna has to cover a small area.
- Frequency reuse is very important concept of the cellular mobile radio system.
- The users located in different geographical areas i.e. different cells can use the same frequency simultaneously.
- The advantage of frequency reuse is that it drastically increases the spectrum efficiency but the disadvantage is that if the system is not designed properly then co-channel interference may take place.

2.3.1 Advantages of Frequency Reuse :

1. A single transmitter of high power need not be used to cover the entire area.
2. Many transmitter of small power working at the same frequency can be used.
3. This technique reduces the minimum height of the antenna.
4. The users located in different geographical areas i.e. different cells can use the same frequency simultaneously.
5. It drastically increases the spectrum efficiency.

2.3.2 Frequency Reuse Schemes :

- We can use the concept of frequency reuse in either time domain or in the space domain.
- In the time domain the same frequency is used by different users in different time slots. This is called as Time Division Multiplexing (TDM).

Frequency reuse patterns :

- There are two categories of frequency reuse in the space domain as follows :
  1. Same frequency is assigned in two different geographical areas. (Such as two different cities.)
  2. To use the same frequency repeatedly in a same general area in one system. This scheme is popularly used in cellular systems.
- The second scheme is illustrated in Fig. 2.3.1. The total available frequency spectrum is divided into 4 co-channel cell groups in the system as shown in Fig. 2.3.1.

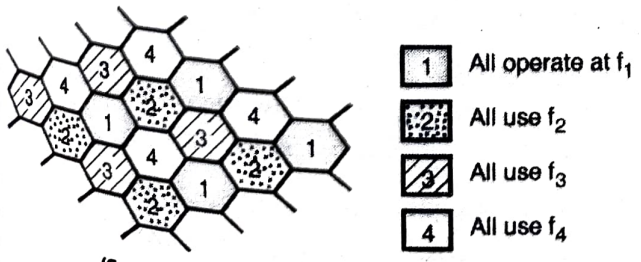

(G-1031) **Fig. 2.3.1 : Frequency reuse**

- The cells marked-1 will use the same frequency say f_1, the cells marked-2 will use same frequency f_2 and so on.

Frequency reuse ratio :

- It is defined as 1/N where N is the cluster size. It is 1/N because each cell within a cluster is assigned only 1/N of the total available channels (frequencies) in the system.

2.4 Handoff / Handover :

Definition :

- The call in progress will continue even when the mobile station moves from one cell to the other.
- This process of continuing the call in progress without terminating it is called as **"hand-off"**.
- It is also called as **handover.**

Need of hand-offs :

- Assume that there is a call going on between two parties over a voice channel.
- When the mobile unit moves out of coverage area of a particular cell site, the reception becomes weak.
- Then the present cell site will request a handoff.
- The system will switch the call to a new cell site without interrupting the call. This procedure is called as the handoff procedure or handover procedure.
- The user can continue talking without even noticing that the handoff procedure has taken place.
- The advantage of handoff procedure is increase in the effectiveness of the mobile system.

Explanation :

- Refer Fig. 2.4.1 to understand the handoff procedure clearly.
- Fig. 2.4.1 shows two co-channel cells separated by a distance D and using the frequency f_1.
- Other cells such as C_1, C_2, C_3, C_4, C_5 etc. exist in-between the two co-channel using frequency f_1.
- The cells C_1, C_2, C_3 and C_4 use different frequencies f_1, f_2, f_3, f_4, etc. as shown in Fig. 2.4.1.

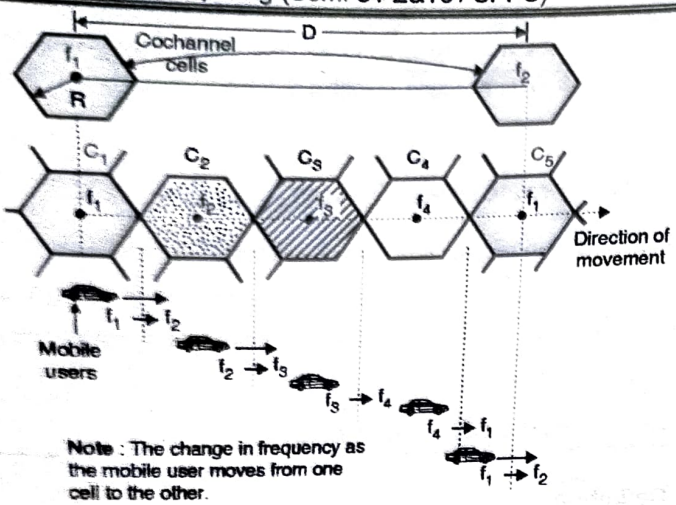

(G-1033) Fig. 2.4.1 : Handoff procedure

- Suppose a mobile unit initiates a call in cell C_1 and then moves to cell C_2.
- Then as it starts going away from C_1, the call is dropped and reinitiated in the frequency channel from f_1 to f_2 when the mobile unit (such as car) moves form C_1 to C_2.
- Similarly when the mobile unit moves from cell C_2 to C_3 the frequency is changed automatically from f_2 to f_3 as shown in Fig. 2.4.1.
- The process of changing the frequency is done automatically by the system and the user does not even notice it.

2.4.1 Handoff Strategies :

- It is important to process handoffs in any cellular system.
- In many handoff strategies, higher priority is given to the handoff request than the call initiation request.
- Handoffs should be performed successfully and they should not be repeated frequently.
- So as to satisfy these requirements, system designers should decide and specify an optimum signal level at which the handoff should be initiated.
- Fig. 2.4.1 illustrates handoff diagrammatically.

Handoff threshold :

- First a minimum signal level for maintaining the call is decided.
- Then a slightly stronger signal level is used as the **handoff threshold**.
- The handoff will be made at this signal level.
- The margin between these two levels is denoted by Δ and given by,

$$\Delta = P_{r\,handoff} - P_{r\,minimum\,usable} \quad ...(2.4.1)$$

- Note the choice of the value of Δ is critical. Δ can not be too small and it cannot be too large as well.
- If Δ is too large, then unnecessary handoffs will take place and if Δ is too small, there won't be sufficient time to complete the handoff and the call may lost due to weak signal.

Improper handoff :

- Refer Fig. 2.4.2(a) which illustrates the **improper handoff** situation i.e. handoff is not made and signal drops below the minimum signal level. The call is terminated.

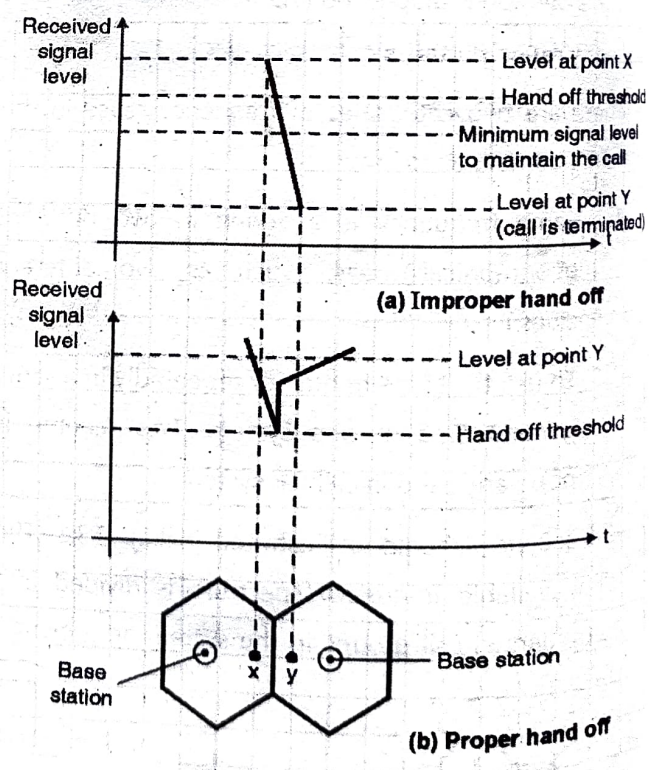

(G-1564) Fig. 2.4.2 : Illustration of improper and proper handoff

- In Fig. 2.4.2(b), the handoff has taken place as soon as the received signal level drops to the handoff threshold.

- Note the increase in the signal level at point Y after handoff.
- Before initiating the handoff, it is necessary to ensure that the reduction in the measured signal level is not due to the momentary signal fading and that the drop in signal level is due to the actual movement of the mobile station.

2.4.2 Dwell Time :

- The time duration over which a call may be maintained within a cell without initiating a handoff is called as dwell time.
- The dwell time depends on propagation, interference, distance between the subscriber and base station etc.

2.4.3 Different Types of Handoffs :

- Following are various types of handoffs, in relation with a Mobile Station (MS) :
  1. Hard hand-off.
  2. Soft hand-off.
  3. Softer hand-off.
  4. Delayed hand-off.
  5. Forced hand-off.
  6. Queued hand-off.
  7. MAHO.
  8. Inter cell hand-off.
  9. Intra cell hand-off.

1. Hard handoff :

- The handoff is known as hard handoff if a mobile station transmits between two base stations operating on different frequencies.
- It means that all the old radio links in the MS are removed before the new radio links are established.
- It is generally used in GSM. We can say that it is a Break before Make strategy.
- Hence in this case higher rates of call drops is found.
- When mobile (in Call) switches to a new sector/Cell which is on different frequency, then it performs hard Handover.
- It is basically an inter-frequency handover.

2. Soft handoff :

- The handoff is known as soft handoff if the MS starts communication with a new base station without stopping the communication with the older base station.
- In a soft handoff the operating frequencies of the old and new base stations are identical.
- Soft handoff enhances the signal by providing different-site selection diversity.
- In simple words we can say that the soft hand-off is based on the Make before Break strategy.
- This technique is used to lower the rates of call drops,
- Soft hand-off is used in CDMA systems.

3. Softer handoff :

- If the handoff takes place within the same cell then it is known as softer handoff.

4. Delayed handoff (Two level handoff) :

- In many situations, instead of one level, a two level handoff procedure is followed, in order to ensure a higher possibility of a successful handoff.
- A handoff can be delayed if no available cell could accept the call. Fig. 2.4.3 shows a graph of signal strength with two handoff levels.

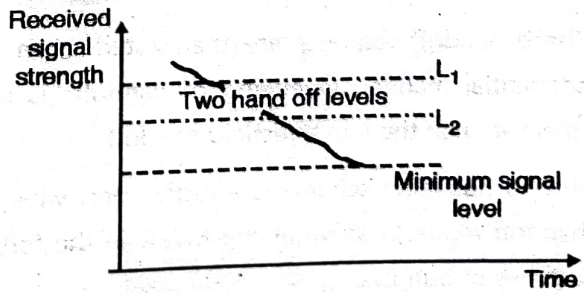

(G-1415) Fig. 2.4.3 : A two level handoff scheme

- When the signal level drops below the first handoff level, the MS initiates a handoff request.

- If due to some reason the mobile unit is in a hole (Place in a cell with low signal level) or neighbouring cell is busy then the MS will repeat the handoff request after every 5 seconds.
- But if the signal strength drops down further and reaches the second handoff level (L_2) then the handoff will take place without any condition, immediately.
- This process is called as **delayed handoff.**

Advantages :

1. It is possible to delay the handoff if neighbouring cells are busy.
2. The number of handoffs required to be carried out will reduce.
3. This will allow the processor to handle calls more efficiently.
4. It makes the handoff occur at the proper location and eliminates the possible interference in the system.

5. **Forced handoff :**

- A **forced handoff** is defined as the handoff which would normally occur but is not allowed to happen by force or a handoff that should not occur but is forced to take place.

6. **Queued handoff :**

- In the **queued handoff** process, the MTSO arranges the handoff requests in a queue instead of rejecting them, if it finds that new cell sites are too busy to makes the handoff possible.
- These handoff requests are then acted upon in a sequential manner. Queueing of handoffs is more effective than the two threshold handoff.

Also, a queueing scheme is effective only when the handoff requests arrive at the MTSO in the form of batches or bundles.

MAHO : Mobile Assisted Hand-Off :

In the second-generation (2G) systems, the handoff decisions is assisted by the mobile stations.

- The mobile assisted handoffs are known as MAHO.
- In MAHO, every mobile station measures the power it receives from all the base stations around it and continuously reports these measured power levels to the serving base station.
- If the power received from the base station of the neighbouring cell begins to go beyond the power received from the current base station by a certain margin then the handoff will be initiated.
- The advantage of MAHO is that this method reduces the time required to handover the call between the base stations.
- MAHO is particularly suitable for the microcellular environment where the handoff procedure needs to be followed very frequently.

8. **Inter cell handoff :**

- During an ongoing call, if a mobile station moves from one cell to another cell, then the corresponding handover is known as inter cell hand-off.
- Thus the inter cell hand-off switches a call in progress from one cell to the other cell.

9. **Intra cell hand-off :**

- The Intra cell handover is the handover within one sector or between different sectors of the same cell.
- It does not require network connections to be altered.
- The intra cell handover switches a call in progress from one channel to the other channel of the same cell.

2.5 Global System for Mobile (GSM) :

Definition :

- The Global System for Mobile Communications **(GSM)** is a standard developed by the European Telecommunications Standards Institute (ETSI) to describe the protocols for second-generation (2G) digital cellular networks used by mobile devices such as mobile phones and tablets.

- Various mobile systems developed over the years are GSM, NA-TDMA, CDMA, PDC etc.
- The only multiple access technique in analog cellular systems is FDMA (Frequency Division Multiple Access) but the digital cellular systems can use either TDMA or CDMA for them.
- The long form of **GSM** is global system for mobile communications, it is a digital mobile system and it uses **TDMA** for multiple access.
- We know that in TDMA each user is allowed to use the radio channel only for a fixed duration of time.
- During this time slot, the user is allowed to utilize the entire bandwidth of the channel.
- Therefore the data is transmitted in the form of bursts.
- A European group called CEPT began to develop the GSM-TDMA system in 1982.
- The first GSM system was implemented in Germany in 1992. It was named as D_2.
- GSM is a second generation cellular system standard. It was developed in order to solve the fragmentation problems of the first generation cellular systems. GSM is the world's first cellular system to specify the digital modulations.

GSM : The European TDMA Digital Cellular Standard :

- Global System for Mobile is world's first cellular system based on digital modulation. By the mid-2010s, it achieved over 90 % market share, and started operating in over 193 countries.
- The 2G networks were developed as a replacement for first generation (1G) analog cellular networks.
- The GSM standard originally described a digital, circuit-switched network optimized for full duplex voice telephony.
- A GSM system has maximum 200 full duplex channels per cell.
- Each cell has different uplink and downlink frequency.
- It uses a combination of FDM, TDM and slotted ALOHA to handle the channel access.

2.6 GSM System Architecture :

Simplified block diagram :

- Fig. 2.6.1 shows the basic architecture of a GSM system.

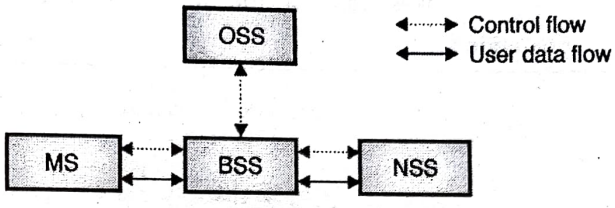

(D-895) Fig. 2.6.1 : GSM architecture

- It shows that the GSM system consists of many subsystems such as :
  1. Mobile Station (MS).
  2. Base Station Subsystem (BSS).
  3. The Network and Switching Subsystem (NSS).
  4. Operating Subsystem (OSS).

1. Mobile Station (MS) :

- This equipment is used to support the connections of the external terminals such as a PC or FAX.

2. Base Station Subsystem (BSS) :

- The BSS and MS are connected to each other via a radio interface.
- It is also connected to NSS in the same way. GSM operation is based on the Open System Inter connection (OSI) model.

3. Network and switching subsystem (NSS) :

- NSS as shown in Fig. 2.6.2 uses an intelligent network (IN).

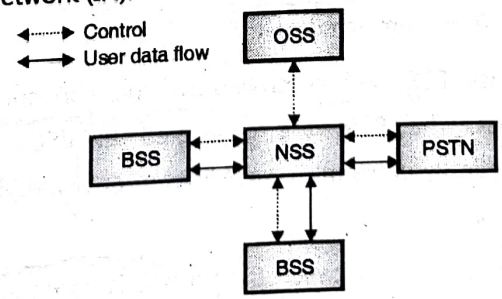

(D-896) Fig. 2.6.2 : NSS external environment

- A signaling NSS is one of the main switching function of GSM.
- The primary job of NSS is the management of the communication between GSM users and other communication users.

4. Operating Support Subsystem (OSS) :

- The OSS takes care of the following areas of operation :

1. Network operation and maintenance.
2. Charging and billing.
3. Management of mobile equipment.

2.6.1 Detail Architecture of GSM :

Block diagram :

- The detail architecture of a GSM system is shown in Fig. 2.6.3.

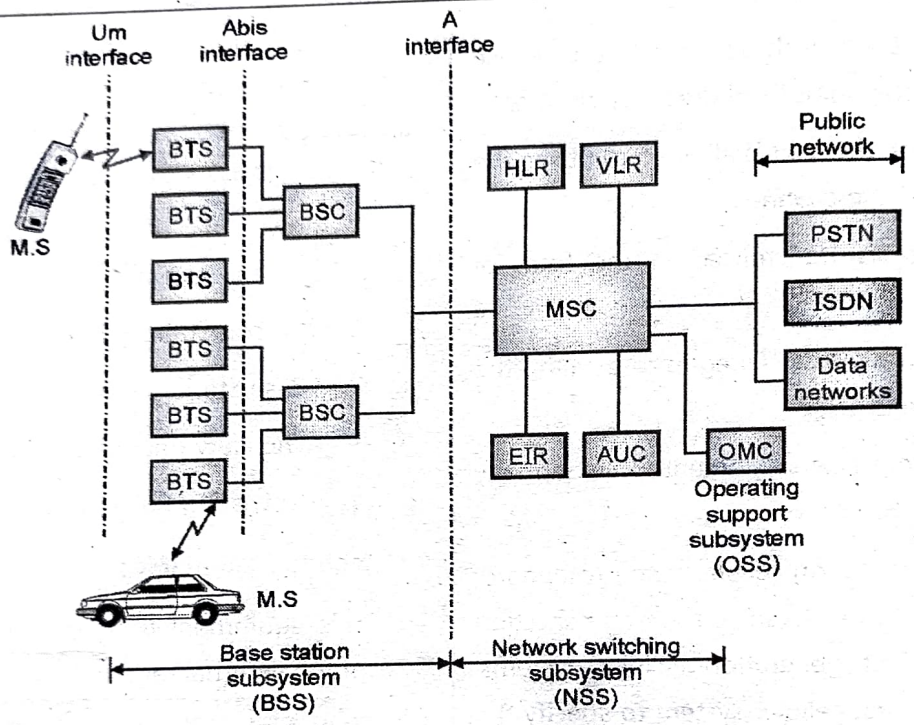

BTS : Base Transceiver Station
BSC : Base Station Controller
HLR : Home Location Register
VLR : Visitor Location Register
MSC : Mobile Switching Centre
EIR : Equipment Identity Register
AUC : Authentication Center
OMC : Operation Maintenance Center

(GT-8) Fig. 2.6.3 : GSM system architecture

- The BTS and BSC both are part of the Base Station Subsystem (BSS).
- Each BSC has hundreds of BTSs. (Bus Transceiver Stations) connected to it.
- These BTSs are controlled by the corresponding BSCs. The BTSs are connected to BSCs either physically or via microwave links or dedicated leased lines.
- The interface between BTS to BSC is called as **Abis interface.**
- This interface is expected to carry the voice data (traffic) and maintenance data.
- The BSCs are physically connected to MSC (Mobile Switching Center) via dedicated / leased lines or microwave link. This interface is known as the **A interface.**
- The NSS contains three different databases, called Home Location Register (HLR), Visitor Location Register (VLR) and Authentication Center (AUC).

- The **HLR** is a database containing the subscriber information and location information of each user, who is staying in the same city as MSC.
- Each subscriber is assigned a unique International Mobile Subscriber Identity (IMSI) and this number will identify each user.
- **VLR database** is used to temporarily store the IMSI and customer information for each roaming subscriber.
- **AUC** is the strongly protected database which takes care of authentication and handles the encryption keys for all the subscribers in HLR and VLR.
- The OSS supports one or more Operation Maintenance Centers (OMC).
- The OMC is used for monitoring and maintaining the performance of each MS, BS, BSC and MSC used in a GSM system.

Modulation :

- The GSM uses the Gaussian Minimum Shift Keying (GMSK) as its modulation technique.

2.6.2 Various Subsystems in GSM :

- Refer Fig. 2.6.4 which shows various subsystems in GSM. We will discuss them in detail in this section.

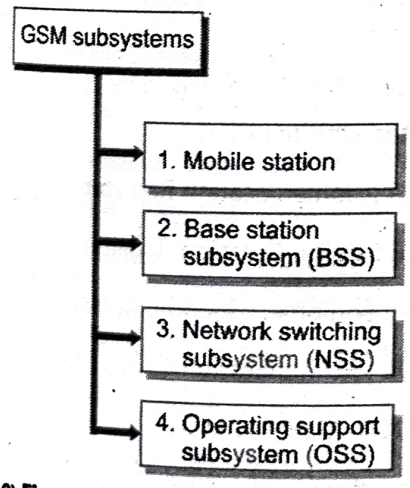

(GT-10) Fig. 2.6.4 : Different subsystems in GSM

2.6.2.1 MS (Mobile Station) :

Definition :

- MS is defined as the physical mobile handset or equipment used by the subscriber to access the GSM network.
- A mobile station may include :
  1. MT : Mobile Termination.
  2. TE : Terminal Equipment.
  3. TA : Terminal Adapter.

Types of MS :

- Types of MS are as follows :
  1. Vehicle mounted station.
  2. Portable station.
  3. Handheld station.
- In practice MS is divided in two parts : a Mobile Terminal (MT) and a SIM.
- **A mobile terminal** consists of hardware and software.
- It is simply the mobile handset, which manages all the functions related to radio and human interface.
- **SIM (Subscriber Identity Module)** is a small card, plugged into mobile terminal.
- The mobile service providers provides a SIM card for every GSM subscriber.
- It is microprocessor based entity implemented on smart card.
- MS cannot communicate with any user or network unless it has the SIM card inserted in it.
- MS has various number identities as follows :
  1. IMSI - International Mobile Subscriber Identity.
  2. TMSI - Temporary Mobile Subscriber Identity.
  3. IMEI - International Mobile Equipment Identity.

2.6.2.2 BSS (Base Station Subsystem) :

Definition :

- The BSS or base station subsystem is a GSM subsystem, which manages all the signalling and traffic between MS and NSS.
- BSS is connected to MS and NSS via a radio interface.

Functions of BSS :

- Functions performed by BSS are as follows :
  1. Coding of speech channels.
  2. To allocate the available radio channels to mobile stations on request.
  3. To transmit the paging signals.
  4. To transmit and receive both control and data signals over the air interface.

Block diagram :

- Fig. 2.6.5 shows the simplified block diagram of the base station subsystem.

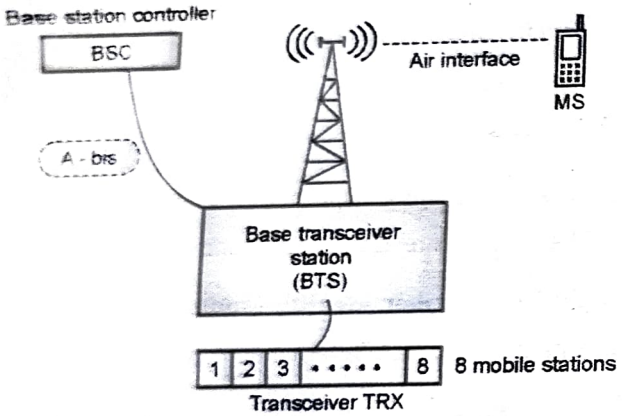

(G-2734) Fig. 2.6.5 : Base station subsystem (BSS)

- The BSS consists of a BTS (Base Transceiver Station) and a BSC (Base Station Controller).

1. **BTS (Base Transceiver Station) :**

- As shown in Fig. 2.6.5 a BTS consists of a directional antenna equipment to transmit and receive radio signals.
- The transceiver (TRX) acts as the central unit of the BTS. The TRX manages wireless links between up to 8 MSs by using a single pair of frequencies.
- The TRX also an important device called TRAU (Transcoder Rate Adaptation Unit) for encoding and decoding of the speech and rate adaptation function of the data.
- A BSC is connected to and controls multiple BTSs, out of which some are co-located at the BSC and others may be remotely distributed and connected to the BSC through microwave links or dedicated lease lines.

2. **BSC (Base Station Controller) :**

- A BSC is a high quality switch, which controls hundreds of BTSs simultaneously.
- A BSC controlling two BTSs, itself handles the mobile handovers between them without involving the MSC. This reduces burden on the MSC.
- The other function of BSC is to provide cell configuration data and to control of RF power levels in BTSs.
- It also assigns free radio channels in the TRX for the link to the mobile station.
- BSC is also maintains the radio path between MSs during the call and disconnects it when the call is over.

2.6.2.3 NSS (Network Switching Subsystem):

- As shown in Fig. 2.6.5 the Base Station Subsystem (BSS) forwards the signals to the Network Switching Subsystem (NSS), which consists of Main Switching Center (MSC), various databases and mobility management units.
- The main unit of NSS is MSC (Mobile Switching Center).
- There are the following five functional entities associated with the MSC :
  1. HLR : Home Location Register.
  2. VLR : Visitor Location Register.
  3. EIR : Equipment Identity Register.
  4. AUC : Authentication Center.
  5. GMSC : Gateway MSC.
- The function of NSS is to manage the communication between GSM network and users from other networks like PSTN, ISDN, Data networks etc.

Mobile Switching Centre (MSC) :

- MSC (Mobile Switching Center) is the main unit of NSS.

Functions performed by MSC are as follows :

1. To perform all the necessary switching functions required by MSs located in MSC area.
2. To communicate with other MSCs present in the GSM network.
3. To communicate with the other networks like PSTN etc.
4. To track the location of the subscriber to carry out the handover process whenever necessary.
5. To perform all the necessary interworking functions.
6. To perform the call routing and echo control functions.

1. HLR (Home Location Register) :

- HLR is the database of permanent subscriber information, which contains important user information like address, account status and preferences.
- The HLR stores the following two types of information :
  1. Subscriber information.
  2. Mobile information.
- **HLR** performs the following **functions**.
  1. **Identification** : HLR stores two very important numbers called IMSI and MSISDN (Mobile Station International Subscriber Directory Number), which are used in call routing between MSC and a particular MS. These unique numbers are necessary to identify a particular MS.
  2. **Subscriber service provision** : HLR also provides information about the offered services such as, teleservices, bearer services or supplementary services.
  3. **VLR address** : The VLR address is required (which is a temporary data), when MS is roaming. It also provides the cipher keys for encryption and decryption.

2. VLR (Visitor Location Register) :

- VLR database is used to temporarily store the IMSI and customer information for each roaming subscriber.
- Whenever a roaming MS enters the new MSC area it undergoes registration process as follows :

Registration process :

1. VLR identifies that the particular MS belongs to some other MSC area.
2. VLR communicates with HLR in the home network of that MS.
3. VLR constructs the GT (Global Title) from IMSI so as to allow communication between VLR and Home HLR.
4. VLR generates MSRN (Mobile Subscriber Roaming Number) to allow MS to use the current network when in roaming.
5. MSRN is sent to home HLR as well.

- VLR stores the following :
  1. MSRN.
  2. TMSI.
  3. Home location of the MS.
  4. Supplementary services data of MS.
  5. MSISDN.
  6. IMSI.
  7. GT.
  8. Local MS identity if used VLR works in association with HLR and AUC.

3. EIR (Equipment Identity Register) :

- It is the database of all the legitimate, and faulty MSs. It stores IMEI of every MS, which is provided by the equipment manufacturer.
- Its function is to keep track of all the valid and invalid mobile equipment in the area.

4. AUC :

- AUC is the database that stores the secret authentication keys for each subscriber.

- It also generates security related parameters for protection purposes. The same secret key is stored in SIM card.
- The secret key is never transmitted on air for security reasons. AUC always works with HLR to carry out authentication successfully.

5. **GMSC :**

- All the calls to a GSM network are routed through GMSC which first identifies the correct HLR and authenticates it.
- It also communicates with other networks and provides gateway function for external network communication with GSM network.

2.6.3 OMSS : Operation and Maintenance Subsystem :

- The three functional entities in OMSS are as shown in Fig. 2.6.6.

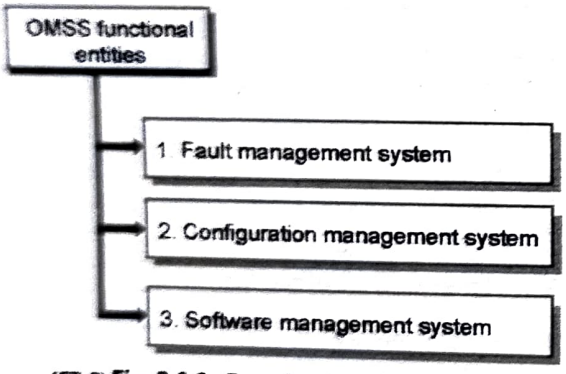

(GT-5) Fig. 2.6.6 : Functional entities in OMSS

- The fault management system invokes alarms from the BSS elements when there is a fault.
- The fault is then resolved either by software or by technicians.
- The function of the Configuration Management is to install and maintain the software of the newly setup BSS network elements.
- It's other functions include management of hardware inventory list and changing operation parameters like frequencies of BTS etc.
- The software management system installs new software or updates and manages the software inventory lists.

2.6.4 Characteristics / Features of GSM Standard :

- Some of the important characteristics/features of GSM standard are as follows :

1. GSM can support more subscribers in the given spectrum.
2. The Short Messaging Service (SMS) is provided by the GSM standard, that allows its subscribers to transmit and receive character text messages.
3. GSM has a Subscriber Identity Module **(SIM)**, which is a memory device that stores all the important information like subscriber's identification number.
4. Each subscriber is allotted a four digit personal ID number that activates service from any GSM phone. The SIMs are smart cards or plug-in modules. Each subscriber needs to insert his SIMs into a mobile phone, to receive GSM calls to the number irrespective of the location.
5. The GSM system provides the **on-the-air privacy** by encrypting the digital bit stream sent by the GSM transmitter.
6. The same GSM phone can be used in different networks.
7. The data transmission and reception rate supported across GSM networks is 9600 bps.
8. GSM also supports FAX transmission and reception at 9.6 kbps.
9. The size of GSM handsets is much smaller.
10. GSM supports the facilities like call forwarding, call on hold, conferencing, Calling Number Identification Presentation (CLIP) and international roaming.
11. GSM is compatible with ISDN , PSTN as well as other telephone company services.

- Following are the two most important GSM features :

1. Subscriber Identity Module (SIM).
2. On air privacy.

1. **Subscriber Identity Module (SIM) :**

- The SIM card of a GSM phone is nothing but a memory device that stores some very important information like, identification number of the subscriber, the type of network and the countries in which the services can be provided to the subscriber.
- In addition it also stores the unique privacy key for the subscriber for decrypting the encrypted received messages and other important information.
- A SIM is required to activate service for any GSM phone. Without a SIM all GSM mobile phone cannot operate.

2. **On air privacy :**

- On-air privacy is the second important feature of GSM.
- On-air privacy indicates that the GSM system ensures some kind of privacy of the transmitted signal.
- The analog FM cellular system calls can be easily monitored because no on air privacy is provided.
- However the GSM transmitters use encryption to encode the signals before transmitting them which makes them a lot safer and hard to monitor.

2.7 Frequency Allocation in GSM :

- Radio transmission parameters are the important parameters of the GSM standard, related to the transmission of data or signals.
- They include the frequencies used for forward and reverse transmission, bandwidths, duplexing technique, number of time slots, number of users etc.

Frequency bands :

- The frequency bands in GSM have been shown in Fig. 2.7.1(a).
- Two bands, one for the **uplink** and the other for **downlink**, each with a bandwidth of 25 MHz, have been assigned to the GSM system.
- The frequency band assigned for the **uplink** is from 890 MHz to 915 MHz (uplink is transmission by mobile stations to base stations).
- Fig. 2.7.1(a) shows the spectrum of GSM standard.
- The frequency band assigned for the **downlink** is from 935 MHz to 960 MHz (downlink is transmission by base stations to mobile stations).

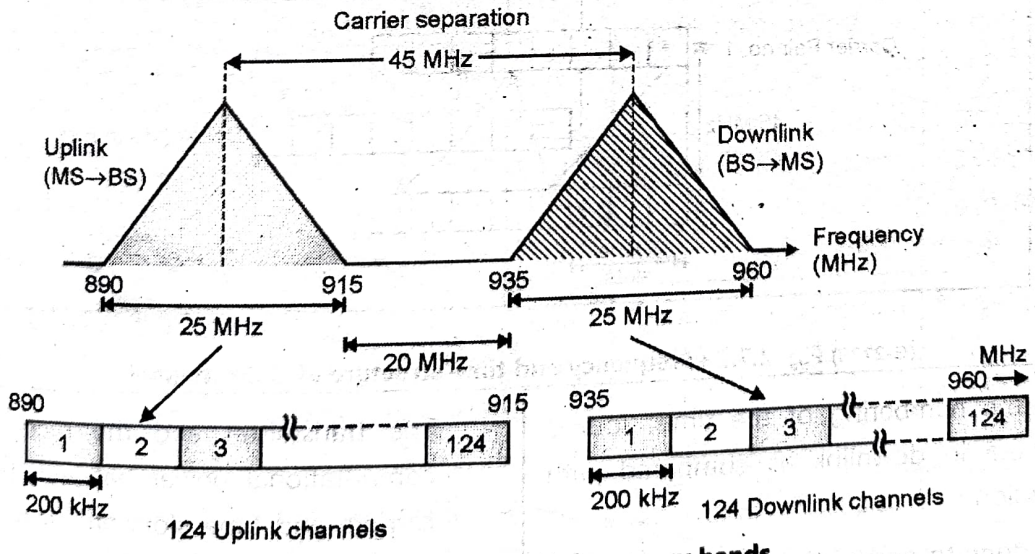

(GT-3) Fig. 2.7.1(a) : GSM frequency bands

- These frequency bands are assigned to GSM in Europe and this GSM is known as GSM 900.
- A duplex transmission is realized in a Frequency Division Duplex **(FDD)** mode. That means two different sets of frequencies are used for the uplink and downlink.
- Each of the 25 MHz band is divided into 124 frequency bands or channels of 200 kHz each with carrier frequencies in their centers (Note that 124 × 200 kHz = 24.8 MHz).
- These frequency channels are assigned to various cells in a sector.

- The ARFCN denotes a forward and reverse channel pair which is separated in frequency by 45 MHz and each channel is time shared between as many as eight subscribers using TDMA.
- Each of these eight subscribers uses the same ARFCN and occupies a unique Time Slot (TS) per frame.

2.7.1 Type of Multiple Access :

- Time along each carrier is divided into 8 slots as shown in Fig. 2.7.1(b).

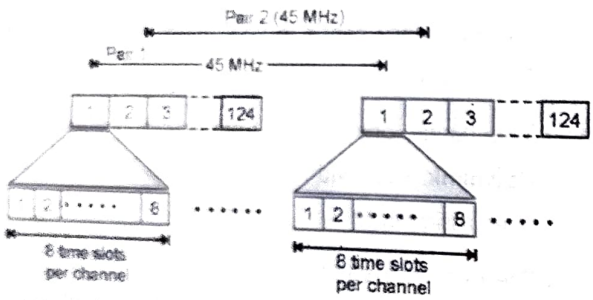

(G-2735) Fig. 2.7.1(b) : Uplink / Downlink channels and time slots in GSM

- Thus, multiple access is realized by assigning the connection a particular carrier frequency (or a sequence of them if frequency hopping is performed) and a selected time slot.
- Therefore we may treat the GSM as a system with TDMA/FDMA multiple access scheme.
- Physical channels are arranged in pairs. Each pair consists of one physical channel in each direction (uplink and downlink).
- They are marked with the same time slot number and the carrier separation is equal to 45 MHz as shown in Fig. 2.7.1(b).
- Due to frequency planning, a subset of carrier frequencies is assigned to each cell or its sector as per some specific rules.
- Fig. 2.7.2 depicts the frequencies and time slot assignment in the GSM system.

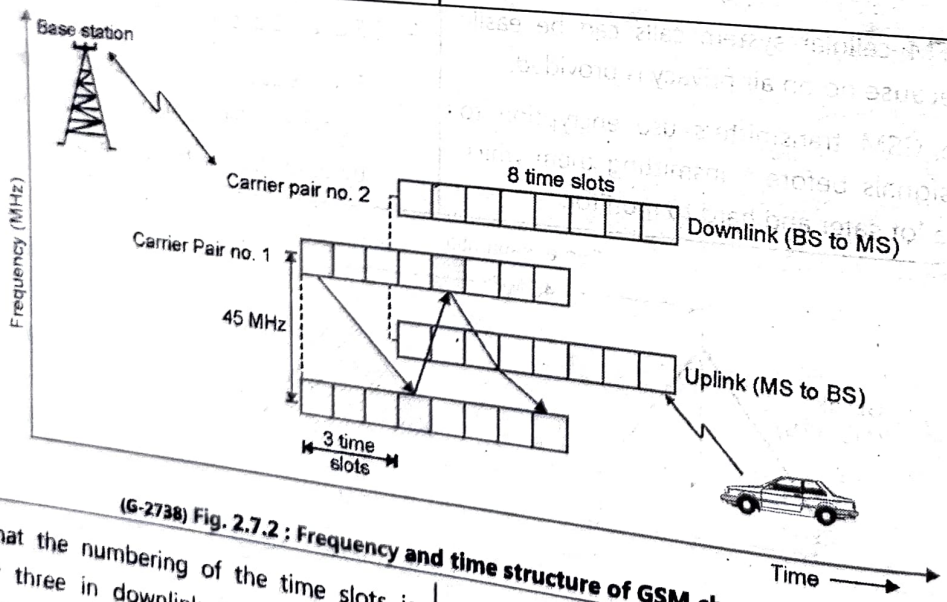

(G-2738) Fig. 2.7.2 : Frequency and time structure of GSM channels

- It shows that the numbering of the time slots is delayed by three in downlink as compared with uplink transmission.
- This has been done to ensure that, a mobile station connecting to a base station in the assigned time slot never transmits and receives the signals at the same time.
- In this manner, an electromagnetic feedback between a mobile station transmitter and receiver is avoided.
- The transmitter and the receiver can share the computational power between them. None of the carriers and time slots are devoted to a particular exclusive use.
- It means that the carriers and time slots can be used to perform different functions depending on the carrier and the current state of the system.
- For that reason the GSM standard has introduced the concept of a **logical channel**, which is a structure performing a particular task in the system.

Channel data rate :

- Radio transmissions on both the forward and reverse link are made at a channel data rate of 270.833 kbps (1625.0/6.0 kbps) using binary BT = 0.3 GMSK modulation.

Channel transmission rate per user :

- Thus, the signaling bit duration is 3.692 µs, and the effective channel transmission rate per user is 33.854 kbps (270.833 kbps/8 users).
- With GSM overhead, user data is actually sent at a maximum rate of 24.7 kbps.
- Each TS (time slot) has an equivalent time allocation of 156.25 channel bits, but of this, 8.25 bits of guard time and six total start and stop bits are provided to prevent overlap with adjacent time slots.
- Each TS has a time duration of 576.92 ms as shown in Fig. 2.7.3, and a single GSM TDMA frame spans 4.615 ms.

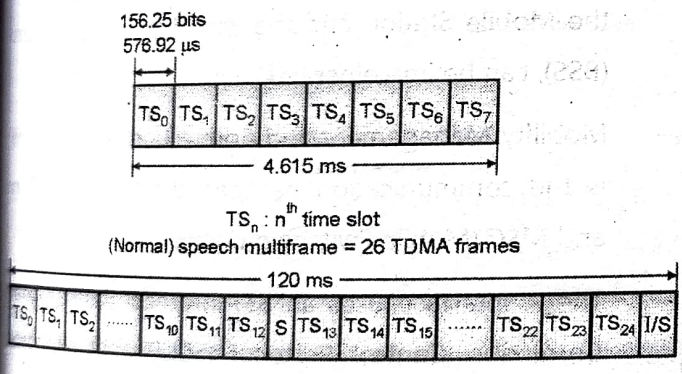

(G-2780) Fig. 2.7.3 : The speech dedicated control channel frame and multiframe structure

- The total number of available channels within a 25 MHz bandwidth is 125 if we assume that there are no guard bands.
- Since each radio channel consists of eight time slots, there are thus a total of 1000 traffic channels within GSM.
- In practical implementations, a **guard band** of 100 kHz is provided at the upper and lower end of the GSM spectrum, and only 124 channels are implemented.
- Table 2.7.1 summarizes the GSM air interface.

A physical channel :

- The combination of a TS number and an ARFCN constitutes a physical channel for both the forward and reverse link.
- Each physical channel in a GSM system can be mapped into different logical channels at different times.
- That is, each specific time slot or frame may be dedicated to either handling traffic data (user data such as speech, facsimile, or teletext data), signaling data (required by the internal workings of the GSM system), or control channel data (from the MSC, base station, or mobile user).
- GSM provides explicit assignments of time slots and frames for specific logical channels, as described below.

2.7.2 GSM Specifications / GSM Air Interface :

- Table 2.7.1 summarizes the GSM air interface specifications.

Table 2.7.1 : GSM air interface specifications

Sr. No.	Specification / Parameter	Value
1.	Uplink frequencies	890-915 MHz (Europe) 1850-1910 MHz (US PCS)
2.	Downlink frequencies	935-960 MHz (Europe) 1930-1990 MHz (US PCS)
3.	Frequency spectrum bandwidth	25 MHz
4.	Duplexing	FDD
5.	Multiple access	FDMA/TDMA
6.	Number of full duplex channel	124
7.	BW of each channel (carrier separation)	200 kHz
8.	Number of voice channels per carrier	8
9.	Type of modulation	GMSK
10.	Channel data rate	270.833 kb/s

Sr. No.	Specification / Parameter	Value
11.	Frame duration	4.615 ms
12.	Time slot period	576.9 µs
13.	SIM card	Yes
14.	Handover type	Hard
15.	Modulation	GMSK

2.8 GSM Signalling Protocol Architecture :

- Fig. 2.8.1 shows the signalling Protocol Structure in GSM.

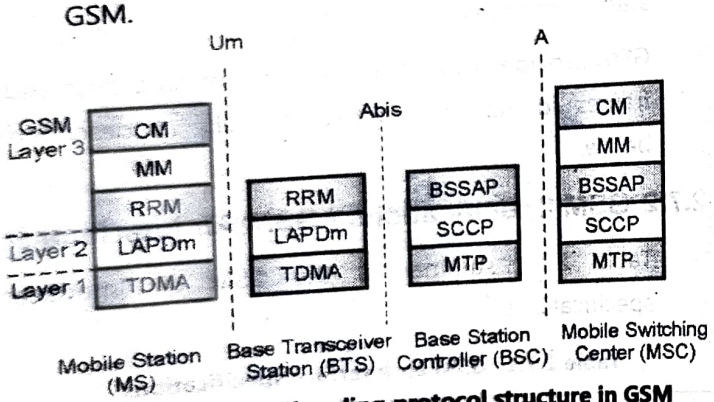

(G-1892) Fig. 2.8.1 : Signaling protocol structure in GSM

- In the signalling protocol structure in GSM there are three general layers depending on the interface.
- **Layer 1** is the physical layer. It makes use of the channel structures over the interface.
- **Layer 2** is data link layer. Across the U_m interface (Refer Fig. 2.8.1), the DLL is actually a modified version of the **Link Access Protocol D(LAPD)** used in ISDN. It is called as the LAPDm.
- Across the **A** interface, as shown in Fig. 2.8.1 the message transfer part layer 2 of signal system number 7 (SS7) has been used.
- The air interface of GSM consists of TDMA time slots and FDMA frequency bands.
- LAPDm protocol is used over the air interface between the base station trans-receiver and the mobile device.
- Some additional control information, apart from the actual data is required to be used for transmitting the information to a desired destination.
- It is called as the signalling message.
- The signalling channels are time division multiplexed on an aggregate of the TDM slots.
- Layer-3 of the GSM signalling protocol is divided into the three following sub-layers :
  1. Mobility Management (MM).
  2. Radio Resource Management (RRM).
  3. Connection Management (CM) for calls routing.
- The layer-3 protocol is used for different purposes of mobility, communication of network resources, code format and call related management messages between different network entities.
- The Radio Recourse Management (RRM) between the Mobile Station and the Base Station Subsystem (BSS), can be implemented.
- Mobility Management and Connection Management is the communication between the Mobile Station and MSC (Mobile Switching Centre).
- The A interface uses an SS7 protocol called Signal Correction Control Protocol (SCCP) that supports communication between the MSC and BSS and the network messages between the individual subscribers and the MSC.

2.8.1 GSM Interfaces :

- As shown in Fig. 2.8.1 there are three different interfaces present in GSM system they are :
  1. U_m : Interface between MS and BTS.
  2. Abis : Interface between BTS and BSC.
  3. A : Interface between BSC to MSC.

2.8.2 Mobile Station-Base Transceiver Station Signaling Protocols :

- Fig. 2.8.2 shows the functions and protocol layers between the MS and BTS.

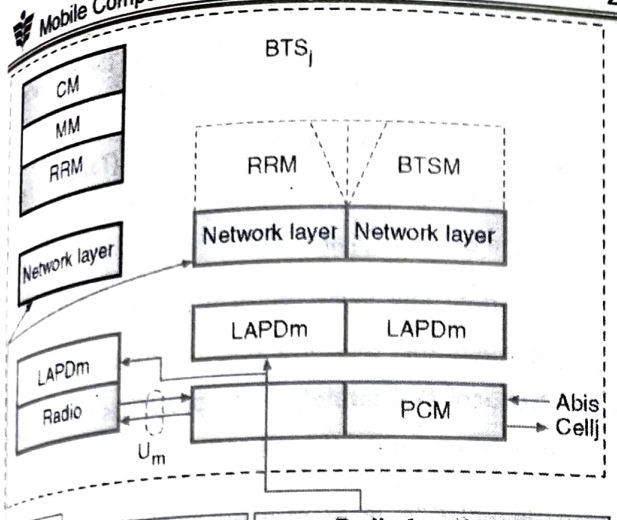

LAPDm functions	Radio functions
1. Data flow control 2. Acknowledged/ unacknowledged data transmission 3. Address and sequence number checks 4. Access point for multiple services 5. Re-sequencing of data 6. Segmentation 7. Data reassembly	1. Full or half duplex access 2. SDMA, TDMA and FDMA 3. Bursting and framing 4. Frequency correction 5. Coding FEC, CRC, data interleaving and encryption 6. Error detection, correction and blocking the data not correctable 7. GMSK digital modulation and transmission 8. Demodulation and reception 9. Decryption and decoding

(G-1893) **Fig. 2.8.2 : Functions and protocol layers between the MS and BTS**

Radio interface / Physical layer :

- Radio (U_m interface) is the physical layer between the Mobile Station (MS) and the Base Transceiver Station (BTS).
- The data link layer is supposed to control the flow of packets sent to and coming from the network layer and provide access to different services.
- LAPDm (Link Access Protocol D-channel modified) is the data link layer protocol, which is located between MS and BTS.
- Refer Fig. 2.8.2 that enlists the functions of LAPDm.
- It does not use any flag for frame delimitation. Instead, the frame delimitation is taken care of by the physical layer that defines the frame boundaries.
- The information carrying field in LAPDm is differentiated field from the fill-in bits (used to fill the transmission frame) with the help of the length indicator.
- A 3-bit Service Access Point Identifier **(SAPI)** used as an address field in LAPDm. It can take eight different values from 0 to 7.
- Out of them, SAPI 0 is used for call control, MM and RRM signaling where as SAPI 3 is used for SMS.
- All other fields are reserved for future purpose.

Network layer sub layers :

- The network layer has the following three sub layers :
  1. Connection Management (CM).
  2. Mobility Management (MM).
  3. Radio Resource Management (RRM).

1. Connection Management (CM) for calls routing :

- The CM sub layer protocol has been designed to support the following three aspects of a call :
  1. Call establishment.
  2. Call maintenance.
  3. Call termination.
- It also controls and supports the functioning of SMS, supplementary services and DTMF signaling.

2. Mobility Management (MM) :

- This network sub layer has been designed to handle the issues related to mobility management when a mobile station travels from one cell to the other.
- The functions of MM are as follows :
  1. Registration.
  2. Update the location.
  3. Authentication.
  4. Identification.
  5. Maintaining a reliable communication with the upper layers.
  6. To use TMSI allocated by VLR in place of IMSI at HLR.

3. Radio Resource Management (RRM) :

- This network sub layer is supposed to handle the following issues in setting up point-to-point communication between a mobile device and network : Establishment, maintenance and release of RRM connection.

- RRM is used for data and user signaling.
- This sub layer carries out procedures such as, selection, reselection and the handoff process.
- When RRM is established, it handles the reception of BCCH and CCCH as well.
- A mobile station always initiates the RRM session, either in response to a paging message or in order to make a call.
- The functions of RRM are as follows :
  1. To manage the quality of radio link.
  2. Assignment of frequency.
  3. It provides options for frequency hopping sequence.
  4. Measurements of signal strength.
  5. To manage the handover process.
  6. RRM session management.
  7. To manage synchronization.

2.8.3 Abis Interface / Base Transceiver Station (BTS)-Base Station Controller (BSC) Signaling Protocols :

- The interface between the BTS and BSC that carries out the traffic and maintenance data is the known as the **Abis interface** which is standardized for GSM systems.
- A wired network such as PSTN, ISDN, PSPDN etc. is used to connect the BTS and BSC.
- The voice signal is encoded into the 64 kbps PCM format in a PSTN network.
- The same format is also used by the Abis interface.
- PCM coding techniques are different from 22.8 kbps. TCH radio interface U_m (between MS and BTS).
- Therefore a translation between the coding formats is essential.
- This is done by translating the TCH bits received from caller mobile station (MS) to 64 kbps PCM and then from PCM to TCH for receiver MS.
- The voice quality gets affected due to the translation and retranslation.
- Therefore, a procedure called **TFO (Tandem Free Operation)** is adopted, to improve the voice quality at the BTSs, BSCs and MSCs.
- The data link layer protocol for the Abis interface between the BTS and BSC is **LAPD (Link Access Protocol D Channel)** which prescribes the standard procedure for D-channel of ISDN.
- The network layer protocol between the BTS and BSC is called as BTSM (BTS management).

2.8.4 A Interface / Base Station Controller (BSC) - Mobile Switching Centre (MSC) Signaling Protocols :

- The physical layer between the BSC and MSC uses PCM multiplexing.
- The MSC is connected to the networks such as PSTN, ISDN and other data networks that use either 64 kbps PCM or 2.048 Mbps CCITT that carries 32 PCM channels.
- The interface between BSC and MSC is the A interface.
- The type of communication between BSCs and MSCs is wired communication.
- MTP (message transfer protocol) and SCCP (signal correction control protocol) are the two data link layer protocols between the BSC and MSC.
- Both of them are parts of SS7 (Signaling System No. 7) used by A interface.
- The network layer protocol that is used at BSC is BSSAP (Base Sub System Application Protocol).

2.9 Signal Processing in GSM :

Block diagram :

- Refer Fig. 2.9.1 which shows the block diagram, to understand all GSM operations from transmitter to receiver.

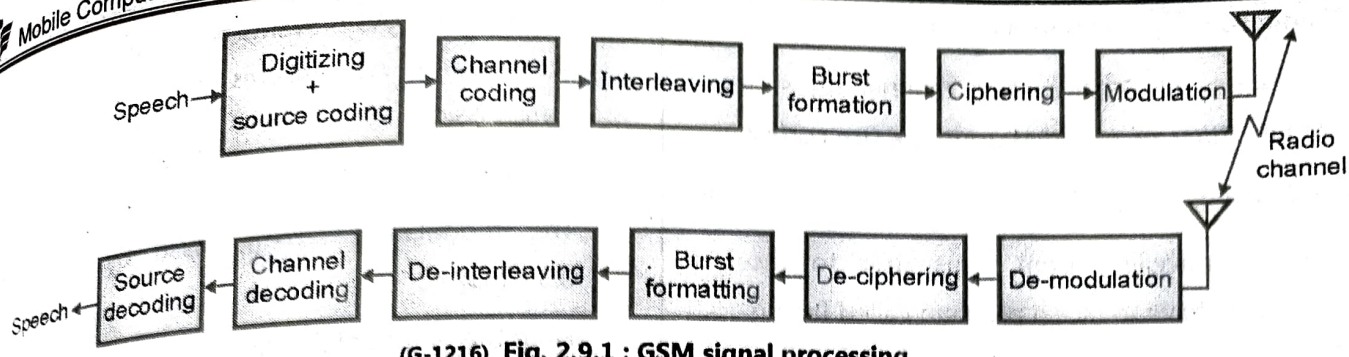

(G-1216) **Fig. 2.9.1 : GSM signal processing**

1. **Speech coding :**

- The working of speech coding in GSM is based on the principle of Residually Excided Linear Predictive Coder (RELP) which uses a Long Term Predictor (LTP).
- The operation of GSM speech coder makes use of a very interesting fact that, each person speaks for about 40 % of the total conversation time in a normal conversation,
- Therefore GSM works in the discontinuous transmission mode (DTX) by using a voice activity detector (VAD).
- Due to DTX mode the battery life increases and reduces the radio interference.
- However there is a disadvantage of the DSX mode of operation, called as switched muting.
- The annoying effect of switched muting due to DTX, is reduced by using a Comfort Noise Subsystem (CNS) at the receiving end.
- The length of each speech block is 20 ms. The speech coder provides 260 bits for each speech block.
- Thus 260 bits correspond to 20 ms. Therefore number of bits per second will be equal to :

  $260/(20 \times 10 - 3) = 13{,}000$ bits or 13 kbps.

2. **TCH / FS, SACCH and FACCH channel coding :**

- The output bits of a speech coder, are arranged into groups, so as to facilitate the error protection.
- Such a grouping is performed on the basis of significance of these bits in contributing to speech quality.
- Out of the total 260 bits in a frame, the most significant 50 bits grouped together to form a group.
- These bits are called as I a bits. Then three parity check bits are added to them. This makes a group of 53 bits.
- The parity check bits are used to detect those errors that cannot be corrected at the receiver.
- These first 53 bits and the next 132 bits are taken and four zeros are appended to them as shown in Fig. 2.9.2.

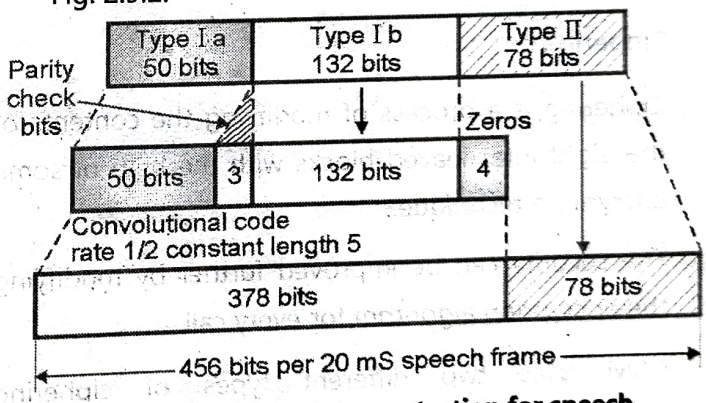

(G-1217) **Fig. 2.9.2 : Error protection for speech signals in GSM**

- This makes a data block of 189 bits which is then encoded into a sequence of 378 bit for error protection.
- No error protection is provided to the remaining least significant 78 bit from the 260 bits.
- These 78 bits are concatenated to the existing sequence as shown in Fig. 2.9.2.
- Thus the total number of bits per block will be (378 + 78 = 456) a 20 ms frame.

3. **Channel coding for data channels :**

- The channel coding used for GSM full rate data channels (TCH / F 9.6) is meant to handle 60 bits of user data at 5 ms intervals.

4. Channel coding for control channels :

- The length of GSM control channel messages is 184 bits. They are encoded using the **fire codes**.

5. Interleaving :

- The bits travelling from transmitter to receiver, sometimes have to face a problem called fading.
- In order to avoid or minimize the effect of fading on all the 456 bits in a block simultaneously, the speech frame or control frame are divided in eight equal length sub-blocks each containing 57 bits.
- These eight sub blocks are placed one each, over eight consecutive TCH time slots.
- This arrangement ensures that, even if a few bits are lost due to fading, it is possible to use the remaining bits to reconstruct the speech, without a significant loss of information.

6. Ciphering :

- Ciphering is a process of modifying the contents of the eight inter-leaved blocks with the help of some encryption technique.
- The security can be improved further by modifying the encryption algorithm for every call.
- GSM uses two different types of ciphering algorithms called A3 and A5.
- Out of which, A3 prevents the unauthorized network access and A5 ensures the privacy of data transmission.

7. Modulation :

- The modulation scheme used by GSM is 0.3 GMSK.
- Here the number 0.3 indicates the 3 dB bandwidth of the Gaussian pulse shaping filter in relation with the bit rate.

8. Equalization :

- Equalization process is carried out at the receiver and the type of equalizer for GSM is not specified.
- The selection of equalizer is manufacturer's choice.

9. Demodulation :

- The receiver carries out the demodulation of the received signal with the help of synchronizer.
- The processes such as deciphering, de-interleaving, channel decoding and speech decoding are carried out after demodulation.

2.9.1 Call Routing :

- Let us take an example to study the sequence of operation when a fixed network subscriber places a call to a GSM network user.
- Thus a landline originates a call to a mobile user. The call routing procedure for such call has been shown in Fig. 2.9.3.

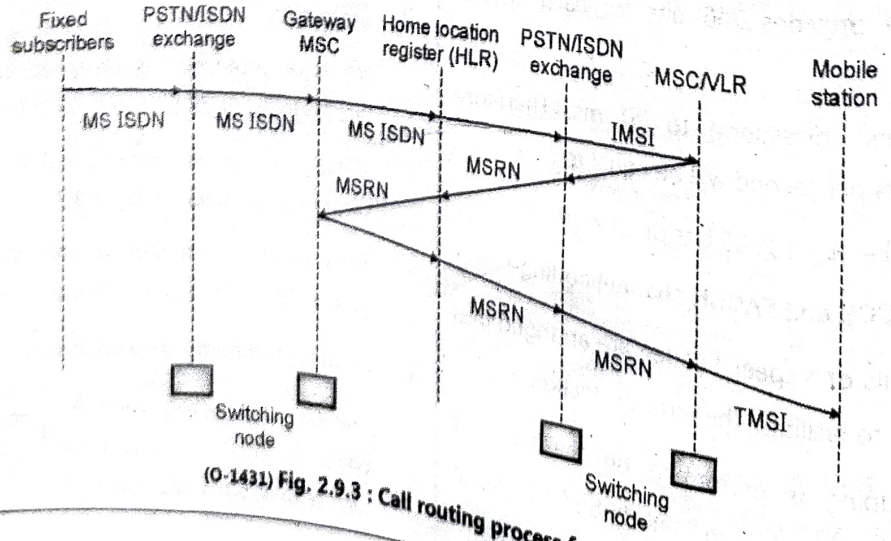

(O-1431) Fig. 2.9.3 : Call routing process for a call

MS ISDN :

- Let the number dialed by the fixed subscriber be +9198222YYYYY
- The directory number that is dialed to establish a call with mobile user is called as Mobile Subscriber ISDN **(MS ISDN).**
- As shown in Fig. 2.9.4 this number consists of the country code, the national destination code and the information about the user.

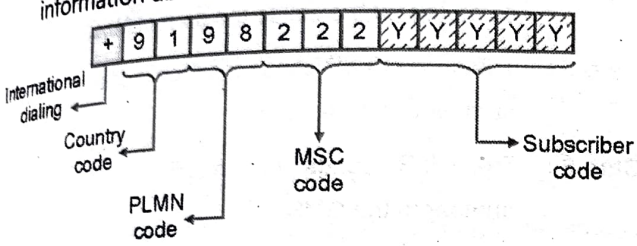

(0-1432) Fig. 2.9.4 : Concept of MS ISDN

- The + prefix indicated international dialing. The next two digit code represents the country code.
- For example +91 is the country code for India.
- The next two digits i.e. 98 represent the Public Land Mobile Network (PLMN) number.
- The next three digits represent the MSC code i.e. 222 in Fig. 2.9.4.
- The last five digits YYYYY represent the subscriber number.

Stepwise routing procedure :

- Refer Fig. 2.9.3 to understand the stepwise procedure for call routing given below :

Step 1 : The call is routed from the fixed user to the local PSTN exchange.

Step 2 : The local PSTN exchange searches its routing table to recognize that the call must be to be routed to a mobile network. Hence, it routes the call to MSC of the mobile network.

Step 3 : The MSC of mobile network sends an enquiry to the HLR for understanding the status of the subscriber. Based on the conditions listed below, the GMSC can make a decision of whether to route a call or not.

1. If the called mobile phone is switched off, a message can be played or recorded in the users voice mail.
2. If the mobile user has his subscription charges and bill pending, a message can be played and the call may not routed.

Step 4 : If all the conditions for routing the call are satisfied, then the MSC sends a request to VLR to determine the VLR the location of called mobile phone.

Step 5 : If the VLR is the home network, then it will find the Location Area (LA) of the mobile subscriber and will page and determine the location of the phone within the Location Area.

Step 6 : If the VLR has a different PLMN (Public Land Mobile Network), then it will route the call to foreign PLMN through the GMSC (Gateway MSC) to the mobile subscriber.

2.10 Call Establishment in GSM :

- In this section we will discuss the following call flow sequences related to GSM :
  1. Registration / Location updating.
  2. Mobile terminated call.
  3. Mobile originated call.

1. Location updating :

- In order to receive the incoming calls from a mobile station that moves within and outside the service area, the home network should somehow keep a track of the location of all the active mobile stations.
- The location updating feature is activated when a mobile station either moves to other MSC or tries to access the network and is not registered in the VLR of that location.
- Each service area consists of many adjacent cells recognized by Location Area Identities (LAI).
- The Mobile Station (MS) generally has the information from the neighbouring base stations and if it sees that a subscriber has moved to a new location then it initiates the sequence as shown in Fig. 2.10.1 and following steps.

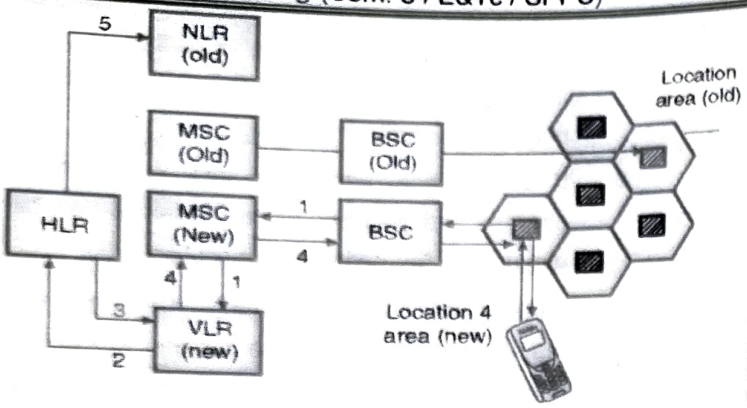

(G-1773) Fig. 2.10.1 : Location updating in GSM

Location Updating Procedure :

Step 1 : When a new location is identified, the Mobile Station (MS) sends a request for location update to the new VLR via the BSC and MSC.

Step 2 : The location update message is sent to the HLR from the VLR. This message consists of the address of the VLR (new) and the IMSI of the MS.

Step 3 : The security and service related information for the MS is transferred to the new VLR.

Step 4 : An acknowledgement message is sent to the mobile station as soon as the location update is done successfully.

Step 5 : The HLR instructs the old VLR to delete all the information related to the relocated MS.

2. Mobile terminated call :

- A call originating from PSTN and terminating on a mobile station is called as the mobile terminated call. Fig. 2.10.2 shows the steps in which a mobile terminated call is processed by GSM.

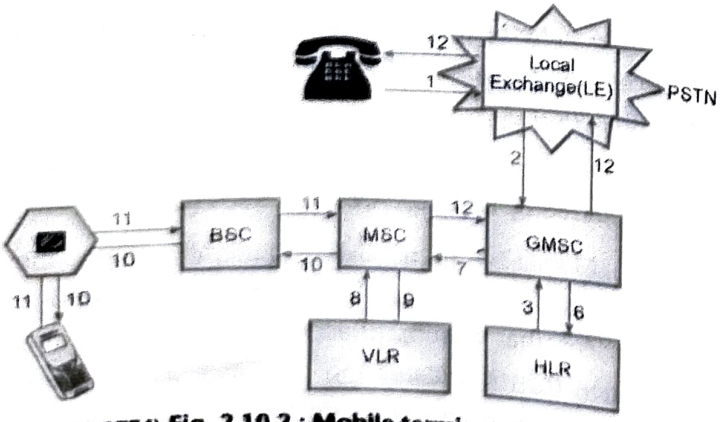

(G-1774) Fig. 2.10.2 : Mobile terminated call in GSM

Step 1 : The call originating landline user dials the Mobile Station ISDN of the mobile user (called party) in GSM.

Step 2 : The Local Exchange sends the call to the GMSC of the called GSM subscriber.

Step 3 : The GMSC searches the HLR for the GSM to obtain the desired routing number.

Step 4 : The HLR requests the current VLR of the called MS to obtain a Mobile station Roaming Number so as to rout the call to the correct MSC.

Step 5 : The current VLR sends the mobile station roaming number to the HLR.

Step 6 : The HLR sends the mobile station roaming number to the GMSC.

Step 7 : The GMSC transfers the call to the MSC by using the MS roaming number.

Step 8 : The MSC enquires about the Location Area Identity (LAI) of the mobile station subscriber to the VLR.

Step 9 : The VLR passes the LAI of the mobile station subscriber to the MSC.

Step 10 : The MSC sends a pager message to the Mobile Station subscriber through BSC. The Mobile Station then sets up the required signaling links.

Step 11 : After establishing the signaling links, the BSC informs the MSC about the same and the call is delivered to the mobile station subscriber.

Step 12 : The connection to the calling landline is completed after the mobile subscriber answers the call.

3. Mobile originated call :

- This type of call is originated by a mobile subscriber and it is meant for a landline user.
- First the calling mobile subscriber enters the phone number to be called on the mobile and presses the send key.
- Then the mobile station connects the correct signaling links to the BSC.
- After that the call is processed by following the steps shown in Fig. 2.10.3.

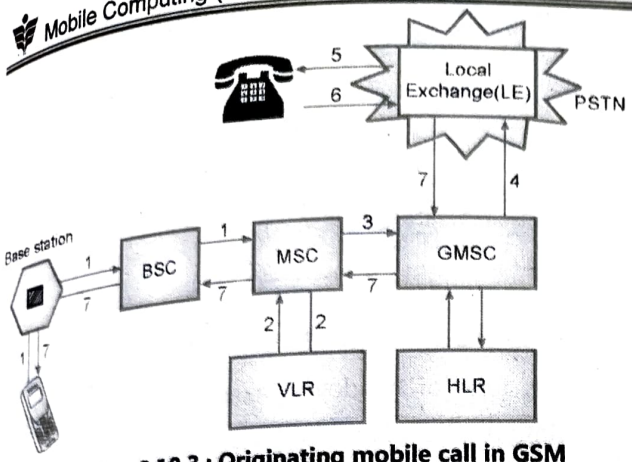

(G-1775) **Fig. 2.10.3 : Originating mobile call in GSM**

Step 1 : The mobile station passes on the dialled number to the MSC via BSC to indicate that it needs service.

Step 2 : The VLR tells the MSC if the mobile station can access the requested service or not. If the MS can access the requested service, then the MSC instructs the BSC to assign the resources required for the call.

Step 3 : The allowed call is then routed to GMSC via MSC.

Step 4 : The GMSC then routes the call to the Local Exchange (LE) of called landline subscriber.

Step 5 : The LE then gives a ring on the called landline terminal.

Step 6 : The landline terminal returns an answer back tone to the LE.

Step 7 : The answer back tone is sent back to the Mobile Station thus completing the call.

2.11 Handover in GSM :

- We have already discussed the concept and need of handover in cellular systems.
- With reduction in the size of a cell, the number of handovers increases. However a handover is not supposed to cause a cut-off (also called as a **call drop**).
- The maximum duration for a handover in GSM has been decided to be equal to 60 ms.

2.11.1 Types of Handover in GSM :

- There are four types of possible handovers in a GSM system.
- They are :
  1. Intra-cell handover.
  2. Inter cell, Intra BSC handover.
  3. Inter-BSC, Intra-MSC handover.
  4. Inter MSC handover.

1. Intra-cell handover :

- The intracell handover happens when a Mobile Station (MS) moves from one place to the other within a cell as shown in Fig. 2.11.1(a).

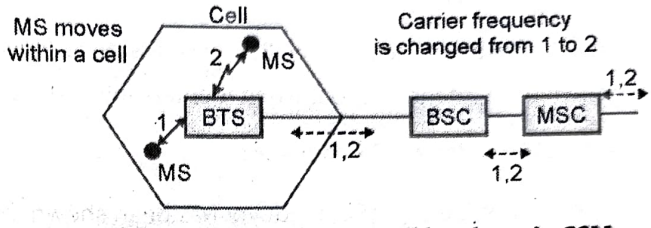

(GT-33) **Fig. 2.11.1(a) : The intracell handover in GSM**

- If a narrow band interference makes transmission at a certain frequency impossible, then the BSC can decide to change the carrier frequency.
- This will lead to the intra-cell handover.
- As shown in Fig. 2.11.1(a), the MS is operating on channel 1 when it is in its original position.
- When it moves within the cell to a new position, it is impossible to operate at this frequency due to interferences.
- Therefore the BSC changes its carrier frequency to 2 to reduce the interference.
- Thus the intracell handover procedure is performed either to optimize the traffic load in the cell or to improve the quality of a connection by changing the carrier frequency.

2. Inter-cell, Intra BSC handover :

- The intercell intra BSC handover has been shown in Fig. 2.11.1(b).

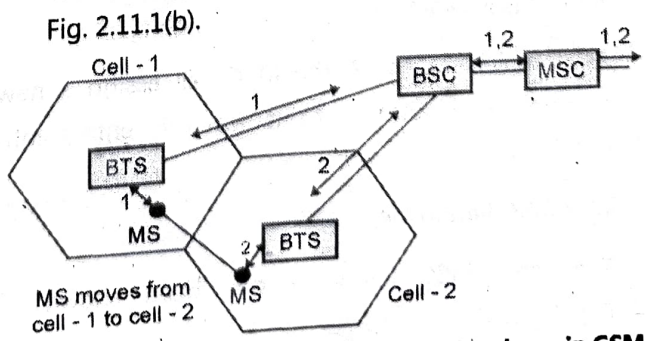

(GT-34) **Fig. 2.11.1(b) : Intercell intra-BSC handover in GSM**

- This type of handover takes place when a mobile station (MS), moves from one cell to the other (cell-1 to cell-2) but remains under control of the same BSC.
- The BSC will carry out the handover by assigning a new radio channel in the new cell to the MS and then release the old one.
- In Fig. 2.11.1(b) the MS is operating on channel-1 when it is in cell-1.
- As it moves to cell-2, the BSC will assign a new channel i.e. channel-2 to it when it enters into cell-2.

3. **Inter-BSC, Intra-MSC handover :**

- The inter BSC intra MSC handover has been shown in Fig. 2.11.1(c).

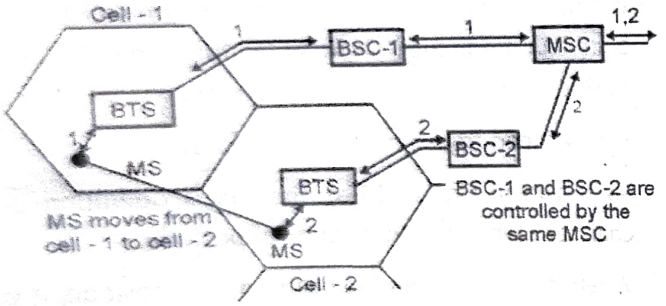

(GT-35) Fig. 2.11.1(c) : Inter-BSC intra-MSC handover in GSM

- This type of handover takes place when a mobile station (MS), moves from one cell to the other (cell-1 to cell-2) controlled by different BSCs but same MSC.
- Such a handover is controlled by the MSC. The MSC will carry out the handover by assigning a new radio channel in the new cell to the MS and then release the old one.
- In Fig. 2.11.1(c) the MS is operating on channel-1 when it is in cell-1.
- As it moves to cell-2, the MSC will assign a new channel i.e. channel-2 to it when it enters into cell-2.

4. **Inter-MSC handover :**

- The inter MSC handover has been shown in Fig. 2.11.1(d).

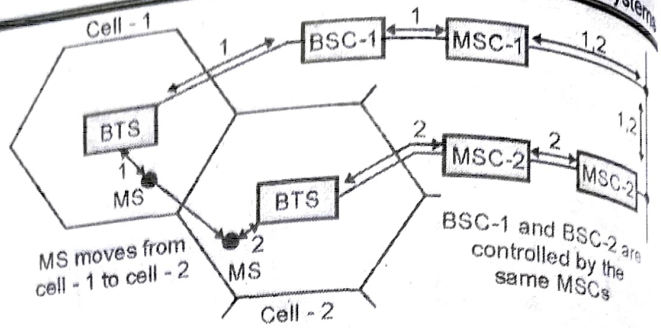

(GT-36) Fig. 2.11.1(d) : Inter MSC handover in GSM

- This type of handover takes place when a Mobile Station (MS), moves from one cell to the other (cell-1 to cell-2) controlled by different BSCs and different MSCs as well.
- Such a handover is performed by two MSCs together.
- This type of handover sets particularly high requirements on the cellular network.

2.12 Security in GSM :

- In the second generation digital cellular systems like GSM, the provision of security is relatively easy as compared to the first generation analog systems.
- It is possible to use the methods like encryption, scrambling, FEC etc. to ensure security in the system.
- GSM offers different security services with the help of the personal information stored in AuC and in the SIM.

Types of security services :

- GSM offers the following security services :
  1. Access control and authentication.
  2. Confidentiality.
  3. Anonymity.

2.12.1 Access Control and Authentication :

Definition :

- Authentication is the process of ensuring that the communication over the wireless radio medium is secured.
- The authentication of a user is the process of ensuring and verify that the user is really the person who claims he is.

- There are two steps in authentication process of GSM. In the first step the authentication of a valid user is carried out for the SIM.
- The user needs a secret PIN to access the SIM. And in the second step the authentication of the subscriber is done.

2.12.2 Confidentiality :

- The confidentiality of all the user related data is ensured by encrypting it.
- The BTS and MS apply **encryption** to voice, data and signaling information, once the authentication is done.
- Due to encryption, it is possible to apply confidentiality only between MS and BTS but not over the entire end to end GSM network.

2.12.3 Anonymity :

- In order to provide anonymity to the user, all data is first encrypted.
- The user identifiers (the information which could reveal the user's identity) is not transmitted.
- Instead a temporary identifier (TMSI) is transmitted by GSM. The VLR assigns this identifier newly after each location update.
- Additionally the TMSI can be changed anytime by the VLR.

2.12.4 Authentication in GSM :

Definition :

- The authentication of a user is the process of ensuring and verifying that the user is really the person who claims he is.
- Authentication is essential to ensure that the communication over the wireless radio medium is secured.
- The authentication process involves two functional entities :

1. The SIM card in mobile phone.
2. The Authentication Center (AUC).

- An important element that ensures security in the GSM system is the Subscriber Identity Module **(SIM) card**, which is an intelligent plastic card with a microcontroller.
- SIM is an inherent part of a mobile terminal.
- The user receives the SIM card from the network operator, which contains a list of individual user data, encryption programs and keys.
- Because it is possible to separate the SIM and the mobile phone, the SIM card provides an additional security means against an unauthorized usage of the stolen or lost phone.
- A **mobile station** consists of two parts that are strictly related to each other : a mobile phone and a SIM card.
- The SIM card contains a microcontroller with ROM, RAM and **NVM (Non-Volatile Memory).**
- The ROM stores the programs implementing A3 and A8 encryption algorithms.
- The capacity of the ROM is 4 to 6 kbits and cannot be copied.
- The RAM is very small and its storage capacity can be up to 256 bytes.
- The size of **NVM** is about 2 to 3 kB and it contains the following individual user's parameters and data :

1. K_i is user's authentication key.
2. IMSI (International Mobile Subscriber Identity) : It is a 15-bit long user's individual identification number which consists of the country code, network code and number of the user.
3. TMSI (Temporary Mobile Subscriber Identity) : It is a temporary identification number assigned to the user after each registration in a new VLR.
4. LAI (Location Area Identifier).
5. PIN (Personal Identification Number); It is a 4 or 8-digit code identifying the user with respect to the SIM card.

6. The personal telephone book : It is a list of telephone numbers entered by the user,
7. The list of foreign cellular networks where roaming is allowed,
8. The received short messages (SMS)

- A specially designed algorithm A3 is used for carrying out authentication.
- After carrying out the authentication, a key is generated for encryption, with the help of another specially designed algorithm A8.
- GSM provides the security services by using three algorithms called **A3, A5 and A8.**
- Their functions are as follows :

Sr. No.	Algorithm	Function
1.	A3	Used for Authentication
2.	A5	Used for Encryption
3.	A8	Used for generation of cipher key.

2.12.5 Authentication Algorithm A3 :

- Authentication is done with the help of SIM. SIM stores authentication key K_i and the user IMSI.
- During the authentication process the Mobile Switching Center (MSC) or MTSO challenges the Mobile Station (MS) with a random number (RAND) which is generated by the AC (Access control) as shown in Fig. 2.12.1.

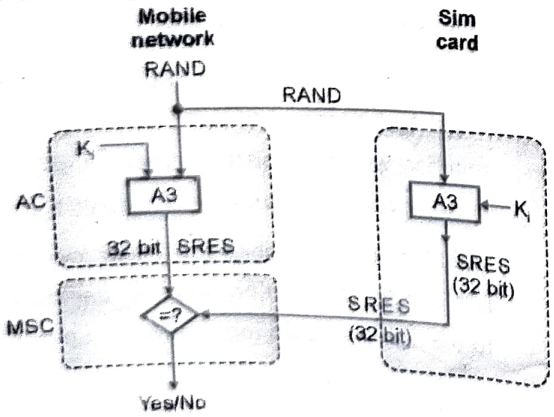

AC : Access control
K_i : User's authentication key
A3 : Authentication algorithm

(GT-37) Fig. 2.12.1 : Verification of the user authenticity

- The SIM card makes use of this RAND received from the MSC along with a secret key k_i stored within the SIM as input.
- Both RAND and k_i are basically 128 bit digital numbers. The A3 algorithm works on the RAND and k_i inputs to produce a 32 bit output called as the signature response (SRES).
- The SRES is then sent back to MSC from MS as the answer to the challenge. Using the same algorithm the AUC also generates a SRES.
- Then the SRES generated by MS (SIM) and AUC are compared. If they are identical then it is an indication that MS is an authentic user.
- That means it is concluded that SIM card is genuine.

2.12.6 Data Encryption Process using A5 and A8 Algorithm :

- Fig. 2.12.2 shows the data encryption process in GSM using A5 and A8 algorithm.
- In GSM, the A5 algorithm is used for the data encryption.
- Only manufacturers of the cellular devices have an access to this algorithm.
- The A5 algorithm is more secure because the secret key K_c is never transmitted over the air. Initially the network activates the A5 algorithm.

Encryption process :

- The data encryption process takes place at the Mobile phone as shown in Fig. 2.12.2.

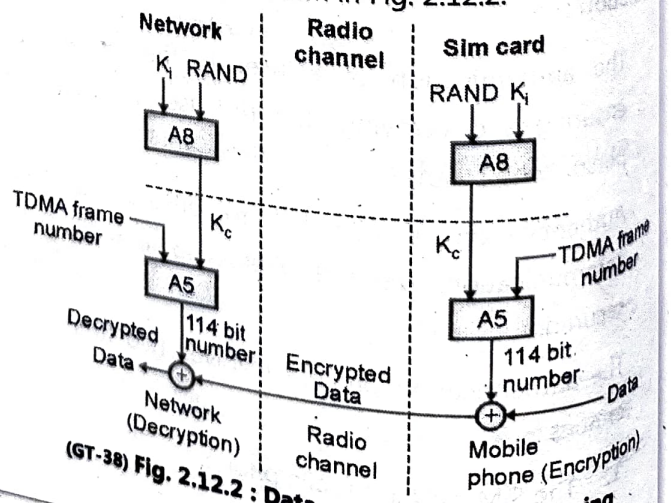

(GT-38) Fig. 2.12.2 : Data encryption process using A5 and A8

- The SIM card initially obtains the data encryption key K_c by applying the RAND number sent by the mobile network during the process of authentication and the individual secret key K_i, to algorithm A8. The A8 algorithm is present inside the SIM card.
- Then the A5 algorithm generates a 114-bit number by using the encryption key K_c and the current 22-bit TDMA frame number.
- These 114-bits are modulo-2 added with the information (i.e. data) bits of the normal burst to produce the encrypted data.
- This encrypted data is then transmitted over the radio channel.

Decryption process :

- The data decryption process takes place at the network as shown in Fig. 2.12.2.
- The same process of generation of the encryption key K_c from the RAND and K_i and then generation of 114 bit number from K_c and the current TDMA frame number, is carried out on the network side as well using A8 and A5 algorithms.
- The received encrypted data is applied to a modulo-2 adder alongwith this 114 bit number at the network site.
- If the received data has no errors during the transmission, the modulo 2 addition of the received data and the generated encrypted data results in the original data sequence. This is the process of decryption.
- The block diagram representation of the encryption and decryption processes are as shown in Fig. 2.12.2.

2.13 GSM Services :

- The GSM services can be classified into three types of services :
  1. Teleservices.
  2. Data services.
  3. Bearer services.
  4. Supplementary services.

2.13.1 Teleservices :

- These services allows subscriber to use terminal equipment functions for communication with other subscribers.
- The teleservices support emergency calling, FAX services, Videotex and Teletex services though they are not integral part of the GSM standard.
- In other words, the standard mobile telephony and the mobile originated or base originated traffic comes under the teleservices.
- The tele-services are as follows :
  1. Digital telephony.
  2. Emergency calling.
  3. SMS.
  4. EMS.
  5. MMS.
  6. Group 3 FAX.

1. Digital telephony :

- The main service of GSM is to provide a high quality digital voice transmission, with a minimum bandwidth of 3.1 kHz.
- Special codecs (combination of coder and decoder) are used for transmission of voice digitally.

2. Emergency calling :

- With this GSM service the same emergency number can be used throughout a country.
- This is a mandatory but free service with the highest connection priority.
- If this number is dialled, then the call with the nearest emergency center is set up automatically.

3. Short Message Service (SMS) :

- With this service the user can send messages upto 160 characters. SMS messages are not transmitted over the standard data channels of GSM.
- Instead they are sent over the unused capacity of signaling channels.

- Hence SMS sending and receiving is possible even when the voice or data is being transmitted.
- SMS can transfer logos, ring tones, horoscopes alongwith the text messages.
- It is also possible to update the software of a mobile phone via SMS.

4. Enhanced Message Service (EMS) :

- EMS is the successor of SMS which offers a message size of upto 760 characters.
- It is possible to send text, ring tones, small images, animated pictures in a standard way using EMS. But EMS service never took off commercially.

5. Multimedia Message Service (MMS) :

- With this service, it is possible to transmit large pictures (GIF, JPEG) and short video clips.
- MSS is integral part of mobile phones with an inbuilt camera.

6. Group 3 FAX :

- This is one more non-voice tele-service in which fax data is transmitted as digital data over the network of analog telephone lines.

2.13.2 Data Services :

- These services allow subscriber to transmit appropriate signals across user network interfaces.
- **Data services** are the GSM services corresponding to the communication between computers and packet switched traffic.
- It supports packet switched protocols and data rates from 300 bps to 9.6 kbps.
- New developments are going on to increase the data rate further.
- Data can be transmitted in two modes :
  1. **Transparent mode** : GSM network provides standard channel coding method for user data.
  2. **Non-transparent mode** : GSM network provides special coding methods based on particular data interface.

2.13.3 Bearer Services :

Bearer services :

- Bearer services are basically the **data services** which correspond to the communication between computer and packet switched traffic.
- **Bearer services** are defined as all those services that enable the transmission of data between **interfaces and networks**.
- In the classical GSM model, the bearer services are **connection oriented** and use circuit or packet switching.
- In GSM, there are different mechanisms for the data transmission.
- The **bearer services** supports the data transmission of transparent and non-transparent, synchronous and asynchronous types.
- Bearer services are of two types :
  1. Transparent bearer services.
  2. Non-transparent bearer services.

1. Transparent bearer services :

- These services use the functions of only the **physical layer** for the data transmission.
- The delay and the throughput of the data transmission is constant if there is no transmission error.
- The transmission quality can be improved only by using the Forward Error Correction (FEC).
- The data rates of 2.4, 4.8 or 9.6 kbps are possible depending on the FEC.
- These services do not try to recover the lost data irrespective of the cause.

2. Non-transparent bearer services :

- These services use the functions of the first three layers of the OSI model i.e. physical, data link layer and network layer.
- They use protocols in the DLL and network layer to add error correction and flow control.

- Due to this, a special mechanism of **selective reject** gets added to facilitate retransmission of lost or erroneous data.
- This reduces the error rate remarkably. But delay and throughput do not remain constant.
- They depend on the transmission quality.

Features of bearer services :

- The important features of bearer services are as follows :
  1. Full duplex data transmission.
  2. Synchronous transmission data rates : 1.2, 2.4, 4.8 and 9.6 kbps.
  3. Asynchronous transmission data rates : 300 to 9600 bps.

2.13.4 Supplementary Services :

- These services are digital in nature and they are offered as supplements with the basic teleservices.
- The supplementary services provide various enhancements for the standard telephony services.
- Some of the typical supplementary services are as follows :
  1. **Conference call :** This service allows a mobile subscriber to start a conference call i.e. a simultaneous conversation takes place between three or more mobile subscribers.
  2. **Call waiting :** During a conversation this service informs a mobile subscriber about an incoming call. The user can answer, reject, or ignore the incoming call while conversation.
  3. **Call hold :** This service allows a user to put an incoming call on hold and after a while call can be resumed.
  4. **Call forwarding :** To divert calls from the original recipient to another number call forwarding service is used. The user himself can set up this service on his/her mobile.
  5. **Call barring :** To restrict some type of calls such as outgoing calls like ISD or incoming calls from unwanted numbers call Barring service is useful.
  6. **Caller Identification :** On your mobile screen, this service displays the telephone number of the person who is calling. It displays telephone number of a person to whom you are connected.
  7. **Suggestion of charge :** This service informs the user about the cost of the services used by them.
  8. **Closed user groups :** This service is intended for the group of subscribers who want to call only each other in the group.

2.14 Mobility Management in GSM :

- One of the major function of a GSM network is Mobility management which allows mobile phones to work.
- The goals of mobility management in GSM are :
  1. To track the location of subscribers.
  2. To allow calls, SMS and other mobile phone services to be delivered.

2.14.1 GSM Location Management :

- The location update procedure in GSM occurs when the MS (Mobile Station) moves from one LA into another area.

2.14.2 Basic Location Update Procedure :

- The basic location update procedure handles following movements without considering fault tolerance and VLR overflow :
  1. Inter-LA movement.
  2. Inter-MSC movement.
  3. Inter-VLR movement.

1. Inter-LA Movement :

- In this case, the MS moves from a LA1 to LA2. Here both the LAs are connected to the same MSC (Mobile StationC) as shown in Fig. 2.14.1(a).
- Fig. 2.14.1(a) shows the steps in Inter-LA movement registration within the same MSC.

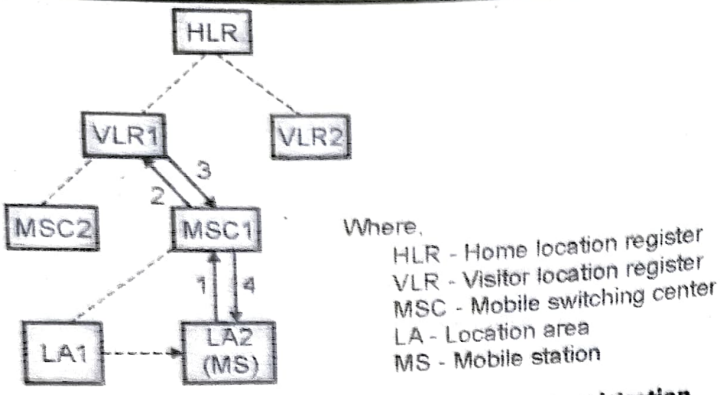

(G-2630) Fig. 2.14.1(a) : Inter-LA movement registration within the same MSC

Steps involved :

Step 1 : The mobile station (MS) sends a request for location update to the MSC through the BTS. This message consists of the addresses of the previously visited VLR, MSC and LA.

Step 2 : The location update request is sent to the VLR by a TCAP (Transaction Capabilities Application Part) message.
i.e. **MAP_UPDATE_LOCATION_AREA.**
This message consists of the address of the MSC, TMSI of the MS, Previous Location Area Identification (LAI), ID for LA1 and LA2 and other related information.

Step 3 : The VLR observes that LA1 and LA2 belongs to the same MSC.

Step 4 : VLR updates LAI (Local Area Identification) field of VLR record and replies with an acknowledgement **MAP_UPDATE_LOCATION_AREA_ACK** to the MS via MSC.

2. Inter-MSC Movement :

- In this case LA1 and LA2 belongs to different MSCs having the same VLR as shown in Fig. 2.14.1(b).

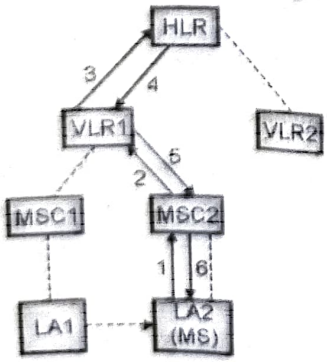

(G-2631) Fig. 2.14.1(b) : Inter-MSC movement registration

- Fig. 2.14.1(b) shows the steps in Inter-M movement registration.

Steps involved :

Step 1 : The Mobile Station (MS) sends a request location update to the MSC through the BT This message consists of the addresses of previously visited VLR, MSC and LA.

Step 2 : The location update message is sent to the VL by a TCAP (Transaction Capabilities Applicati Part) message i.e.
MAP_UPDATE_LOCATION_AREA.
This message consists of the address of MSC, TMSI of the MS, Previous Location Are Identification (LAI), ID of LA1 and LA2 and oth related information.

Step 3 : The VLR observes that previous LA and targ LA belongs to different MSCs i.e. MSC1 a MSC2 respectively which are connected to the same VLR. The HLR address of the MS obtained from the MS's IMSI which is stored VLR record. VLR sends
MAP_UPDATE_LOCATION message to th HLR which includes IMSI of MS, address MSC2 and VLR1 and other related information

Step 4 : The HLR identifies the MS's record by using th received IMSI and updates MSC address in th record. HLR replies with an acknowledgement the VLR.

Step 5 : The VLR observes LA1 and LA2.

Step 6 : VLR updates LAI (Local Area Identification) fie of VLR record and replies with acknowledgement
MAP_UPDATE_LOCATION_AREA_ACK to th MS via MSC.

3. Inter-VLR Movement :

- In this case LA1 and LA2 belongs to different MS having different VLRs as shown in Fig. 2.14.1(c).
- Fig. 2.14.1(c) shows the steps in Inter-VLR movem registration.

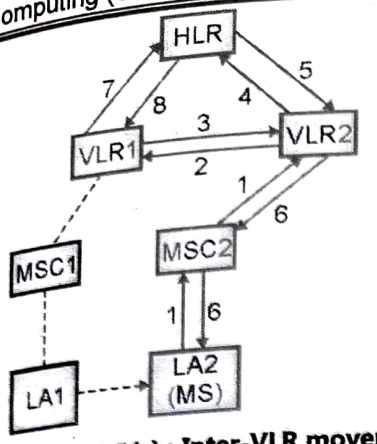

(G-2632) **Fig. 2.14.1(c) : Inter-VLR movement**

Steps involved :

Step 1 : The Mobile Station (MS) sends a request for location update to the MSC through the BTS. This message consists of the addresses of the previously visited VLR, MSC and LA.

Step 2 : The location update message is sent to the VLR by a TCAP (Transaction Capabilities Application Part) message.

i.e. **MAP_UPDATE_LOCATION_AREA.**

This message consists of the address of the MSC, TMSI of the MS, Previous location area identification (LAI), ID of LA1 and LA2 and other related information.

Step 3 : As the Mobile Station moves from VLR1 to VLR2, VLR2 do not have the VLR record and IMSI of the MS. VLR2 identifies the address of VLR1 from the message **MAP_UPDATE_LOCATION_AREA.**

VLR2 sends **MAP_SEND_IDENTIFICATION** message to VLR1.

Step 4 : The HLR identifies the MS's record by using the received IMSI and updates MSC address in the record. HLR replies with an acknowledgement to the VLR containing the TMSI of the MS. VLR1 uses this TMSI to find the corresponding IMSI in the database. This IMSI is then sent back to VLR2.

Step 5 : The VLR2 generates a VLR record of the MS. It sends registration message for the updating the HLR. HLR updates the record of MS and sends acknowledgment back to the VLR2.

Step 6 : VLR2 creates a new TMSI and sends it to the MS.

Steps 7 & 8 : The outdated record of MS in the VLR1 is deleted.

2.14.3 GSM Transaction Management :

– The concepts of call origination and termination procedures and algorithms are explained as follows.

1. Basic call origination procedure :

– Fig. 2.14.2 shows the basic call origination process.

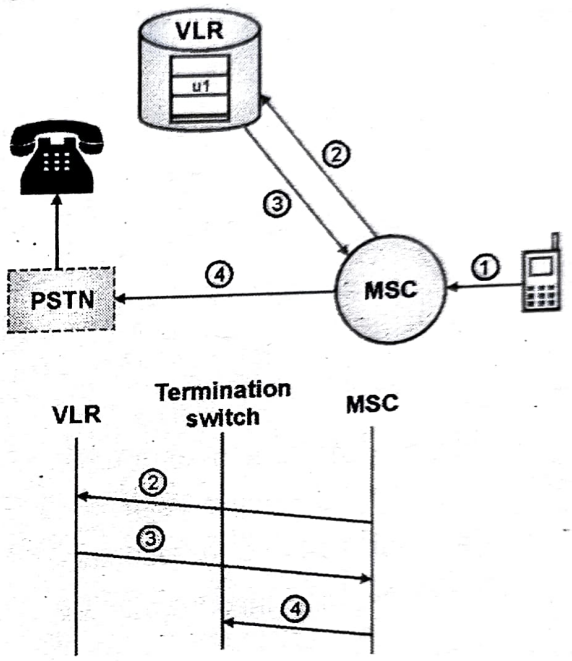

② MAP_SEND_INFO_FOR_OUTGOING_CALL
③ MAP_SEND_INFO_FOR_OUTGOING_CALL_ack
④ IAM

(G-3057) **Fig. 2.14.2 : Call origination operation**

– The algorithm for the basic call origination Procedure is described in the following steps :

Step 1 : The MS of user 1 i.e. MSu1 sends the call origination request to the MSC.

Step 2 : The MSC forwards the request of MSu1 to the VLR by sending the message **MAP_SEND_INFO_FOR_OUTGOING_CALL.**

Step 3 : The VLR checks the u1's profile in the database and sends the acknowledge message **MAP_SEND_INFO_FOR_OUTGOING_CALL_ACK** to the MSC to grant the call request of u1.

Step 4 : According to the standard PSTN call setup procedure, the MSC sets up the trunk.

2. Basic Call Termination Procedure :

– Fig. 2.14.3 shows the basic call termination process.

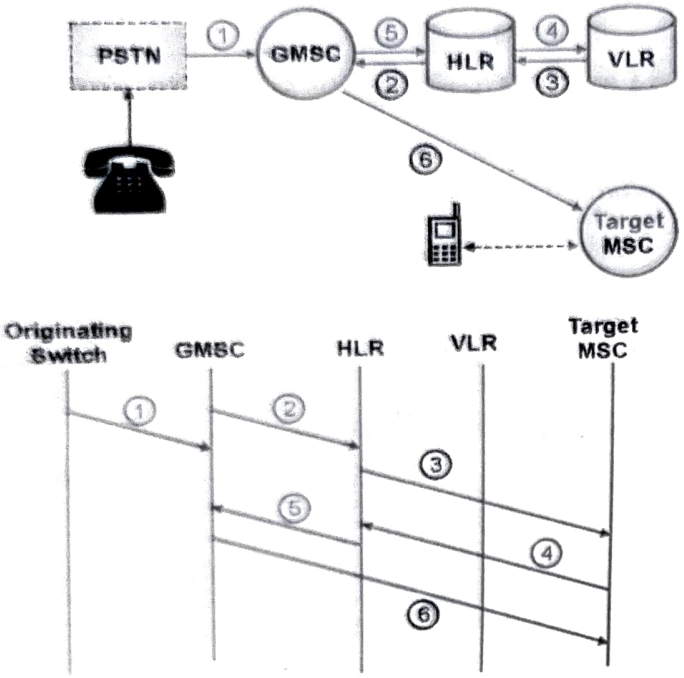

(G-3058) Fig. 2.14.3 : Call termination operation

As shown in Fig. 2.14.3, the routing information is obtained from the serving VLR for call termination to a GSM subscriber.

The algorithm for the basic call termination procedure is described in the following steps :

Step 1 : When PSTN user dials the mobile station ISDN number (MSISDN), the call is routed to a gateway MSC by an SS7 ISUP IAM message.

Step 2 : In order to obtain the routing information, the gateway MSC or ISDN exchange interrogates the HLR by sending **MAP_SEND_ROUTING_INFORMATION** to the HLR. This message includes the MSISDN of the MS and other related information.

Step 3 : To obtain the Mobile Subscriber Roaming Number (MSRN), the HLR sends a message **MAP_PROVIDE_ROAMING_NUMBER** to the VLR.

This message includes the IMSI, the MSC number, and other related information. During the location update, the MSC number is maintained in the HLR at inter-MSC and inter-VLR location update. MSC number is used to set up the voice trunk and it provides the address of the target MSC.

Steps 4 & 5 : The VLR generates the MSRN by using the MSC number. MSC number is stored in the VLR record of the MS. This roaming number is sent back to the GMSC via the HLR.

Step 6 : The MSRN provides the address of the target MSC residing the MS. To set up the voice trunk, an SS7 ISUP IAM message is directed from the GMSC to the target MSC.

– The location information in HLR or VLR is utilized in the location update and the call-delivery procedures.

– In case of failure of the mobility database, the system will not be able to track the MS.

2.14.4 Advantages of GSM :

– Following are the advantages of GSM :

1. GSM provides better quality of speech.
2. Data transmission is supported in the GSM system.
3. International roaming is possible in the GSM.
4. New services are provided due to ISDN compatibility.
5. There is a large variety of mobile phones, which operate on GSM.
6. The working of phone is based on a SIM card and hence user can change the different variety of phones.
7. The power consumption is less in GSM mobiles.
8. It is more cost effective.

2.14.5 Disadvantages of GSM :

- Following are the disadvantages of GSM :
  1. Main disadvantage of GSM is that many users share the same bandwidth, which may result in the transmission interference.
  2. As compared to CDMA, the per-unit charge on roaming calls is higher in GSM.

2.14.6 Applications of GSM :

- Following are a few other applications of GSM :
  1. Educational institutions and organizations.
  2. Managing traffic.
  3. Bus / railway station.
  4. Business.
  5. Medical field.
  6. Mobile telephony.
  7. Telemetry system.
  8. Toll collection.
  9. Forest fire and rainfall detection systems.
  10. Health monitoring.
  11. Weather forecasting.

2.15 GPRS (General Packet Radio Service) :

- GPRS is a packer based technique which could be the next step in evolution of GSM as well as IS-136 and PDC standards (all the TDMA based 2G standards).

Principle :

- GPRS operates by supporting a multiple user network sharing of individual channels and time slots.
- This is different than the principle of HSCSD. Due to this technique. GPRS can support many more users than HSCSD but in a burst manner (non-continuous manner).
- The GPRS standard provides a packet network on dedicated GSM or IS-136 radio channels.

Air interface :

- The modulation formats specified in the original 2G TDMA standards (GSM and IS-436) are retained in GPRS. But it uses a completely redefined air interface (as compared to GSM or IS - 136) for better handling of data.
- GPRS has dedicated radio channels and particular time slots that allow an **always on** access to the network.
- The GPRS subscribers are instructed automatically, to tune to the above mentioned channels and time slots.

Uplink and downlink frequencies :

- The uplink and downlink frequencies used in GPRS are exactly same as those used in GPS.

Uplink	890 – 915 MHz
Downlink	935 – 960 MHz

Data rates :

- If all the eight time slots of a GSM channel are dedicated to GPRS, it is possible for an individual user to achieve a data rate of 171.2 kbps.
- However these data rates decrease with increase in the number of users trying to use the GPRS network.
- The data rate specified by GPRS (dedicated peak) i.e. 21.4 kbps per channel operates well with both GSM and IS-136 and has been successfully implemented.
- There are eight time slots of a GSM radio channel. When all of them are dedicated to GPRS, a user can achieve a data rate of $8 \times 21.4 = 171.4$ kbps.

Error correction :

- In GPRS the applications are required to provide their own error correction schemes.

GPRS implementation :

- For implementation of GPRS, the GSM operator needs to install only the new routers and gateways at the base station.
- A new software that redefines the base station air interface and time slots, is also needs to be installed at standard the base station.
- A new RF base station hardware is also required.

2.15.1 Features of GPRS :

1. Channel bandwidth : 200 kHz.
2. Duplex : FDD.
3. No new spectrum is required.
4. Old GSM handsets cannot be used. Needs new GPRS handsets.
5. It is built on the existing GSM network to provide high-speed data service.
6. GPRS has dedicated radio channels and particular time slots that allow an always on access to the network.
7. High data rate up to 171.2 kbps for a single user.
8. GPRS supports both point-to-point and point-to- multipoint packet service.
9. GPRS is designed to support bursty applications like email, traffic telematics, telemetry, broadcast services and web browsing.
10. GPRS provides the following security services : Authentication, access control, user information confidentiality and user identity security.

2.15.2 GPRS Architecture :

- Fig. 2.15.1 shows the architecture of the GPRS system.

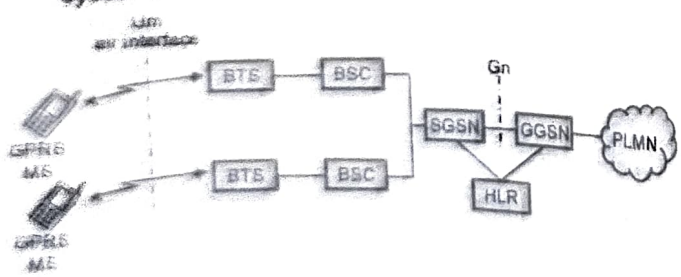

(GT-48) Fig. 2.15.1 : Architecture of GPRS system

- In GPRS two new network elements are introduced, which are known as GSN (GPRS support nodes).
- Fig. 2.15.1 shows GPRS architecture, which is formed with all GSNs, which are integrated into the standard GSM architecture, alongwith some interfaces.

GPRS support nodes :

- There are two types of support node in GPRS :
  1. SGSN (Serving GPRS support node).
  2. GGSN (Gateway GPRS support node).

1. Serving GPRS Support Node (SGSN) :

- As shown in Fig. 2.15.1, the BSCs are connected to SGSN which acts as the service access point to the GPRS network, for the GPRS user.
- SGSN is analogous to MSC in the GSM networks. We may view it as a packet switched MSC.
- Within the service area of SGSN, it delivers packets to MS (mobile stations).
- SGSNs send queries to home location registers (HLRs) for obtaining the profile data of GPRS subscribers.
- In their service area, SGSNs detect new GPRS MS and process the registration of new mobile subscribers and keep records of their locations inside a given area.
- In this way the SGSNs perform the **mobility management functions** such as attaching/detaching a mobile subscriber and its location management.

Functions of SGSNs :

- The main functions of SGSN are as follows :
  1. Routing of data to and from mobile station.
  2. To handle authentication.
  3. To carry out data compression and ciphering.
  4. Tracking of location and mobility administration.
  5. Stores the location and profile of users.
  6. Mobility management.

2. Gateway GPRS Support Node (GGSN) :

- The GGSNs are connected to the external packet switching data networks, like the X.25 or the Internet as shown in Fig. 2.15.1.

- For all these networks the GGSNs acts simply as a router.
- When the data addressed to a specific mobile user is received by a GGSN, it first checks if the called address is active.
- If it is active, then the GGSN forwards the data packets to SGSN.
- However if the called address is found inactive, then GGSN simply discards the received packets.
- The GGSNs route the mobile originated data packets to the desired network.
- They also track the mobile user in association with the SGSNs.

3. **GPRS interfaces :**

- The GPRS architecture includes signaling interfaces with various protocols, which controls and support the transmission of packets across the networks and to the mobile stations.
- Following are the GPRS interfaces :

1. **Air Interface (Um) :** It connects MS and BTS (Base Transceiver Station).
2. **A-bis Interface :** It connects BTS and BSC (Base Station Controller).
3. **Gb Interface :** It connects BSC with SGSN.
4. **Gn Interface :** It connects SGSN and GGSN.
5. **Gi Interface :** It connects GGSN with external PDN (Packet Data Network).
6. **Gr Interface :** It connects SGSN and HLR. Exchange the user information between SGSN and HLR.
7. **Gc Interface :** It connects GGSN and HLR. Exchange the location information between GGSN and HLR.

2.15.3 GPRS Radio Interface :

- The GPRS radio interface has to accommodate GSM voice as well as packet data and this requires updates including to the slot and burst.
- One requirement for GPRS was that it would be able to operate alongside the GSM system with mobiles for both types being able to access the radio access network.

GPRS modulation scheme :

- GPRS builds on the basic GSM structure. It uses the same signal format having 200 kHz channel bandwidths.
- It also has the same modulation scheme and using GMSK modulation.
- Retaining the same modulation scheme means that the level of upgrade required to be able to support GPRS in addition to GSM is inimized.
- GMSK modulation was chosen for GSM originally because it offered a number of advantages including good spectral efficiency, resilience to interference, low levels of interference outside the wanted bandwidth, and the ability to use a non-linear RF power amplifier.
- This last point is of great importance because the use of a non-linear power amplifier brings greater levels of efficiency and this results in longer battery life – an important factor for mobile phones.

GPRS frame and slot structure :

- Again the GRPS air interface employs the same basic structure as that adopted for GSM.
- The overall slot structure for this channel is the same as that used within GSM, having the same power profile, and timing advance attributes to overcome the different signal travel times to the base station dependent upon the distance the mobile is from the base station.
- This enables the burst to fit in seamlessly with the existing GSM structure.
- GPRS employs four levels of error correction in its data encoding.
- The level of error correction used depends upon a number of variables and it is defined as four levels, CS1, CS2, CS3 and CS.

- Fig. 2.15.2 shows the frame structure of GPRS.

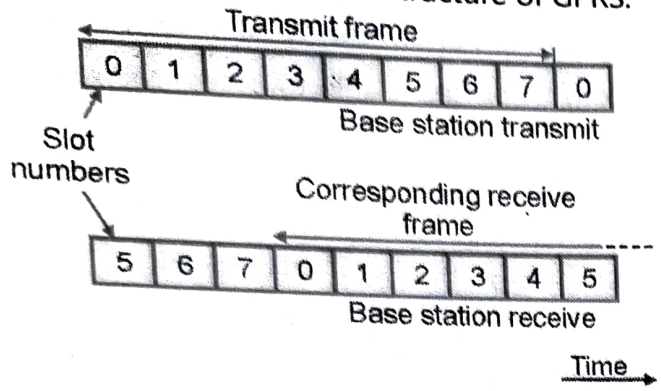

(G-2730) Fig. 2.15.2 : Frame structure of GPRS

GPRS burst structure:

- Fig. 2.15.3 shows the burst structure of GPRS.

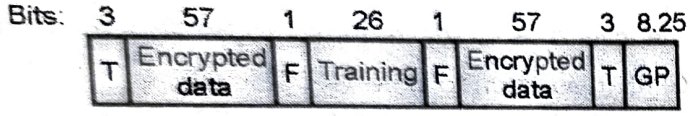

(G-2731) Fig. 2.15.3 Burst structure of GPRS

- Each GPRS burst of information is 0.577 ms in length and is the same as that used in GSM.
- The GPRS burst carries two blocks of 57 bits of information in line with a GSM burst, giving a total of 114 bits per burst.
- It therefore requires four GPRS bursts to carry each 20 ms block of data, i.e. 456 bits of encoded data.
- Slots can be assigned dynamically by the BSC to GPRS dependent upon the demand, the remaining ones being used for GSM traffic.
- Where :

  T = tail bit and F = coding flag

- The BSC assigns PDCHs to particular time slots, and there will be times when the PDCH is inactive, allowing the mobile to check for other base stations and monitor their signal strengths to enable the network to judge when handover is required.
- The GPRS slot may also be used by the base station to judge the time delay using a logical channel known as the Packet Timing Advance Control Channel (PTCCT).
- The GPRS radio interface is very similar to that of GSM and this enables both GSM and GPRS to operate via the same radio access network.
- They can operate together on the same carrier, bursts of GSM and GPRS occupying the same frame.
- This enabled GPRS to be an evolution of GSM and base stations to steadily have GPRS incorporated into them.

2.15.4 GPRS Frame Structure and Channel Coding :

- Fig. 2.15.4 shows the structure of a GPRS multiframe.

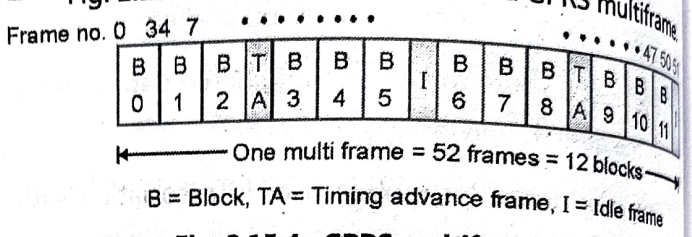

(GT-50) Fig. 2.15.4 : GPRS multiframe structure

- It can be seen that, four subsequent frames constitute a block.
- A block is a unit prepared from the point of view of the applied channel coding.
- There are 12 such blocks in the multiframe (B0-B11).
- One multiframe corresponds to 52 frames or 12 blocks. Out of the remaining four frames, two frames are idle (I) frames and two other frames (TA) are used to update the frame timing advance.
- As we know, a single GSM normal burst carries 114 bits of user data.
- Therefore, one block in a GPRS frame, consisting of 4 frames contains 4 x 114 = 456 bits.
- Therefore each coding scheme applied in GPRS produces a 456-bit block.

  1 multiframe = 52 frames = 12 blocks (B0-B11)

  1 block (1 unit) = 4 subsequent GSM bursts
  = 4 frames

  1 GSM burst = 114 bits, therefore 1 block
  = 4 GSM bursts × 114 bits
  = 456 bits.

Channel coding :

- Channel coding adds redundant bits to protect the transmitted data packets against errors.

- The channel coding methods used in GPRS is same as that in standard GSM systems.
- GPRS uses a two level channel coding. The two levels are called as the outer coding and the inner coding levels.
- The outer level code is a block code which adds a few tail bits at the end of the code word.
- Then this code word is coded using convolutional codes and some bits are punctured to produce a 456 bit code word.
- The coding scheme is decided based on channel conditions and service requirements.
- Coding schemes decide the quality of service of the GPRS system, which also depends on the reliability, delay, priority of service and throughput.

2.15.5 GPRS Transmission Management :

- Before GPRS transmission starts, it is necessary to perform some special procedures so as to make the mobile station and network ready for data exchange.
- First step in this procedure is that, a mobile station should **register with the SGSN** serving the area in which the mobile station is located. Such a procedure is called **GPRS Attach.**
- After this the network carries out the user authorization, sends the user profile from the HLR to the SGSN and finally assigns a Packet Temporary Mobile Subscriber Identity to the user.
- For certain types of MS the combined GSM/GPRS registration can be performed.
- Note that the MS is not visible in the GPRS network and is in the idle state before performing GPRS Attach procedure.
- After the network attachment, the MS switches to the ready state and it sends information to the SGSN after every movement to a new cell.
- Therefore, the location of the MS in the ready state is known very accurately.
- A MS in the ready state can send and receive packets if initiation of the data exchange is done.
- A mobile station goes in standby mode, if the it does not send or receive packets for some time.
- The location of the MS in the standby state also is traced very accurately.
- SGSN keeps track on the location of the MS and it is ready to send or receive packets.
- But if it does not participate in data exchange then it goes into standby mode.
- The location of the MS in standby mode is tracked by cell group RA (routing area). For this paging is required.
- PDP address (Packet Data Protocol) : For data exchange with IP or X.25 network, MS needs special address called as PDP address.
- It is unique for each session. It consists of PDP type, PDP address, requested QoS and address of GGSN.
- This is stored in MS, SGSN and GGSN.

2.15.6 GPRS Protocol Stack / GPRS Protocol Reference Model :

- Fig. 2.15.5 shows GPRS protocol stack for the user data transmission.

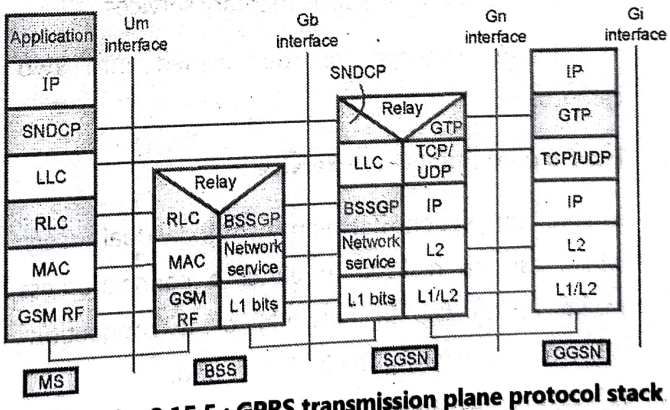

(G-2427) **Fig. 2.15.5 : GPRS transmission plane protocol stack**

- Um (air interface) is located between MS and BSS, the Gb interface is located between BSS and SGSN and Gn interface is located between SGSN and GGSN.
- SNDCP (Subnetwork dependant convergence protocol) encapsulates the IP packets in GPRS specific packet format which is used between SGSN and MS.

LLC layer provides a reliable logical link to the data units from the higher layers, which depends on the underlying radio interface protocols.

LLC provides either acknowledged or unacknowledged data transmission.

GTP (GPRS tunneling protocol) tunnels user data between the two GSNS in the GPRS backbone network.

BSSGP (base station subsystem GPRS protocol) layer conveys routing and QoS related information between the BSS and SGSN.

RLC (Radio Link Control) protocol provides reliable radio link for the data transfer between MS and BSS.

MAC layer controls the multiplexing of signaling and data messages from various GPRS users.

GSM RF (Radio Frequency) layer controls the physical channel management, modulation/demodulation, transmission, power control and channel coding/decoding.

2.15.7 GPRS Services :

- Data transfer in a GPRS system is performed within the selected bearer or supplementary services.
- The bearer services can be divided into two categories :

1. **The Point-to-Point (PTP) Service :**
   - It is a connection between two individual users, which can be realized in either a connectionless mode (using the IP network) or a connection-oriented mode (using the X.25 network).
2. **The Point-to-Multipoint (PTM) Service :**
   - It is a connection between one user and a specified number of other users.
   - It is possible to select the users their location in a specified area (multicast service) or can be addressed according to a specified list (group service).

- **Bearer services in GPRS :**
  - Bearer services of GPRS offers End-to-End packet switched data transfer services.
  - A GPRS supports the two types of data transfer services such as PTP (point-to-point) and PTM (point-to-multipoint) services.
  - Now a day, the Point-to-Point (PTP) service is available and in the future releases of GPRS PTM will be available.
  - The types of data services supported by GPRS are as follows :

1. **SMS (Short Message Service) :** GPRS supports SMS as a data bearer service. SMS offers text messages.
2. **MMS (Multimedia Messaging Service) :** GPRS supports MMS, which offers multimedia messages. Audio, pictures, clips or videos can be sent via MMS.
3. **WAP (Wireless Application Protocol) :** GPRS supports WAP, which is a data bearer service over HTTP protocol.

2.15.8 Characteristics of GPRS :

- Following are the characteristics of GPRS :

1. GPRS uses packet switched network.
2. It uses GSM architecture and GPRS support nodes.
3. It enables voice and data flow through the network.
4. It has dynamic time slot allocation.
5. It is faster than GSM and code division multiple access (CDMA).

2.15.9 Advantages of GPRS :

- Following are the advantages of GPRS :

1. **Speed :** GPRS technology offers higher data rate than GSM. GPRS provides speed limit upto 171 kbps and offers throughput upto 40 kbps.
2. **Packet switched :** GPRS is packet switched system circuit and parallely packet switching can be used.
3. **Always on :** GPRS provides "Always on" capability.

4. **Spectral efficiency** : Because of shared use of radio channels, GPRS provides a better traffic management and it has service access to a greater number of users.

5. **Packet transmission** : For long data packet transmission GPRS works more efficiently.

2.15.10 Disadvantages of GPRS :

Following are the disadvantages of GPRS :

1. As GPRS uses the GSM band for data transfer, when a connection is active, calls and other network related functions cannot be used.

2. Depending on the individual service provider GPRS is usually to be paid per Mbytes or kbytes. But this has been modified in various places where there is no more charge of per usage of GPRS downloads instead GPRS downloads are rather unlimited with a flat fee to be paid every month.

3. It does not provide store and forward service therefore if the MS is not available the data gets lost.

2.15.11 Applications of GPRS :

Following are the applications of GPRS :

1. Sending and receiving e-mail, Short Message Service (SMS), Multimedia Message (MMS), fax etc.
2. Internet access and video conference.
3. Provides location based services.
4. Provides the connection with PC's and other devices.
5. Non-real time Internet applications.
6. Retrieval of e-mails, faxes.
7. Asymmetric web browsing (more downloading and less uploading).

2.15.12 Comparison of GSM and GPRS :

Table 2.15.1 gives the comparison between GSM and GPRS.

Table 2.15.1 : Comparison of GSM and GPRS

Sr. No.	Parameter	GSM	GPRS
1.	Abbreviation	Global system for mobile communication	General packet radio service
2.	Based system	TDMA	GSM
3.	Users per channel	8	8
4.	Type of connection	Circuit switched technology	Packet switched technology
5.	Frame duration	4.6 ms	4.6 ms
6.	Carrier size	200 kHz TDMA	200 kHz
7.	Multiple access	TDMA	TDMA
8.	Data rates	9.6 kbps	14.4 – 171.2 kbps
9.	Frequency separation	45 MHz	45 MHz

2.16 Universal Mobile Telecommunication Service (UMTS) or W-CDMA :

Objectives of W-CDMA / UMTS :

– The objectives of W-CDMA/UMTS are as follows :

1. High frequency spectrum efficiency.
2. Use of frequency band : 1885 MHz – 2025 MHz, 2110 MHz – 2200 MHz.
3. Within a frequency band radio-resource should be flexible to many networks and traffic types.
4. Radio bearer capability of up to 2 Mbps data rates.
5. Global and seamless radio coverage can be achievable.
6. UMTS user number is not dependent on service provider.
7. Into a single system and one equipment services such as office, residential and cellular can be integrated.

8. Provides flexibility for addition of new services and technical capabilities.
9. Provides low cost services and user devices.
10. Good quality of speech and service.

UMTS Spectrum :

- Frequency allocation used by UMTS/W-CDMA system is as shown in Fig. 2.16.1.

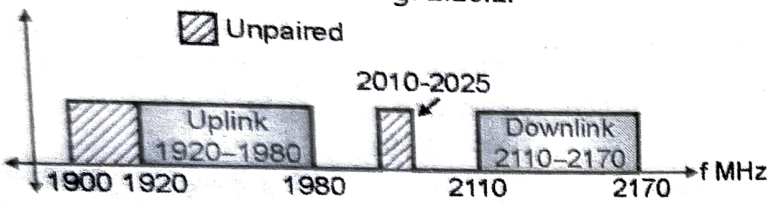

(G-2550) Fig. 2.16.1 : Frequency allocation for UMTS

Frequency spectrum :

- Uplink 1920 MHz-1980 MHz, Downlink 2110 MHz-2170 MHz

2.16.1 Features of UMTS :

- The key features of UMTS are as follows :
  1. It is a wideband DS-CDMA system.
  2. It has backward compatibility with GSM.
  3. Packet data rate on downlink : 2.048 Mbps.
  4. Minimum forward channel bandwidth : 5 MHz.
  5. Frame structure : 16 slots per frame.

2.16.2 UMTS Releases and Standards :

- **Release 99 or R99** is the initial release of the UMTS.
- New radio access technologies UTRA FDD and UTRA TDD are described by this release of the specification.
- Due to this the cost effective migration from GSM to UMTS takes place.
- This release was finalized in the year 1999 hence the name R99.
- Release 2000 or R00 came into existence after R99. But 3GPP realized in September 2000 that it will be impossible to finalize this standard upto the end of year 2000.
- Hence as decided by 3GPP, R2000 is divided into two standards :
  1. Release 4 (Rel-4).
  2. Release 5 (Rel-5).
- For R99 all standards starts with 3.x.y whereas versions Rel-4 and Rel-5 starts with 4.x.y and 5.x.y respectively.

Release 4 :

- In the fixed network **Release 4** initiates quality of service, several execution environments and new service architectures.
- TD-SCDMA as low chiprate option to UTRA-TDD was added (i.e. only 1.28 Mchip/s that needs only 1.6 MHz bandwidth) due to the Chinese proposal.
- This release was frozen in March 2001 which already includes more than 500 specifications.

Release 5 :

- Release 5 defines basically a different core network.
- The networks based on the GSM/GPRS will be replaced by all an IP core. However, there is no change in the radio interfaces.
- IP based multimedia services (IMS) are incorporated by this standard which is under the control of the IETF's session initiation protocol.
- HSDPA (High Speed Downlink Packet Access) with speed 8-10 Mbit/s was added and a wideband 16 kHz AMR code was also added for better audio quality.
- This provides additional features such as end to end QoS messaging and many data compression mechanisms.

2.16.3 Features of UMTS Standards :

Features of Release 99 (December 99) :

1. Basic compatibility of UTRA (W-CDMA FDD).
2. Improved call control.
3. Advanced QoS for UMTS.
4. UTRAN architecture.

Features of Release 4 (March 2001) :

1. Compatibility of UTRA (W-CDMA TDD).
2. UTRAN architecture.
3. Introduced 1.28 Mchip/s TDD mode.
4. Location service.

Features of Release 5 (March 2002) :

1. IMS (IP Multimedia Service subsystem), are incorporated.
2. HSDPA (High Speed Data Packet Access), is added.
3. Provides End to end quality of service.
4. Wideband AMR, is added for better audio quality.
5. Security enhancements.
6. Provides many data compression mechanisms.

2.16.4 Services Provided by 3G Systems / UMTS :

1. **Voice :** 3G system will provide good speech quality as compared to the telephone network.
2. **Messaging :** E-mail attachments are allowed in 3G system.
3. **MMSC multimedia messaging services :** 3G supports MMS which are designed for rich text, icons, logos, animated clips etc.
4. **Medium multimedia :** In 3G system, for web surfing, games, location based maps its downstream data rate is suitable.
5. **Interactive high multimedia :** 3G supports for this service which is used for high quality videophones, videoconferencing etc.

2.17 UMTS Architecture :

- In this section we will discuss initial UMTS standard i.e. R99.
- The simplified UMTS reference architecture is as shown in Fig. 2.17.1(a) which supports both UTRA solutions i.e. 3GPP and CDMA 2000.

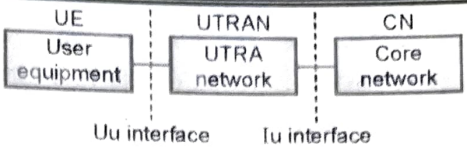

(G-2457) Fig. 2.17.1(a) : Main components of UMTS

Main components of UMTS :

- As shown in Fig. 2.17.1(a), the main components of UMTS are :
  1. UE (User Equipment).
  2. UTRAN (UTRA Network).
  3. CN (Core Network).
- The UTRAN (UTRA Network) includes RNS (Radio network subsystems) and UTRAN handles call level mobility.
- The RNS performs functions such as radio channel ciphering/deciphering, handover control, radio resource management etc.
- Through the radio interface (Uu) the UTRAN is connected to user equipment (UE).
- Radio interface Uu is equivalent to the Um interface in GSM. The Core Network (CN) has functions such as gateways to other networks, intersystem handover etc.
- The communication between CN and UTRAN is performed via Iu interface. In between UE and UTRA if there is no dedicated connection then CN performs the function of location management.

2.17.1 UMTS Domain and Interfaces :

- This basic architecture of UMTS is again subdivided into **domains** and interfaces as shown in Fig. 2.17.1(b).

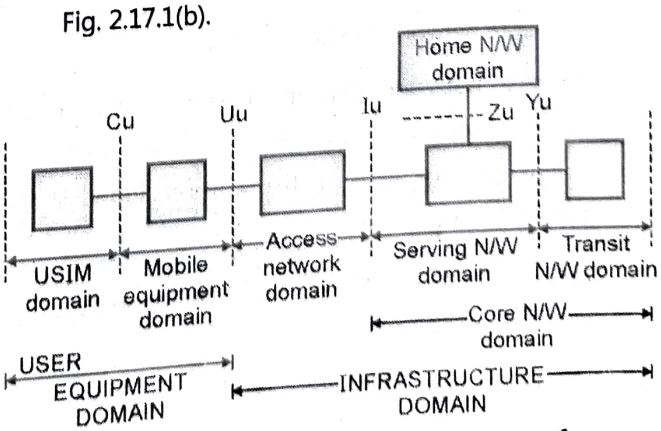

(G-2458) Fig. 2.17.1(b) : UMTS domain and interface

UMTS domains :

- As shown in Fig. 2.17.1(b), the UMTS architecture is divided into two domains :
  1. User equipment domain.
  2. Infrastructure domain.

1. User equipment domain :

- This domain is assigned to a single user and it includes functions required to access UMTS services.
- User equipment domain is again subdivided into :
  1. Mobile equipment domain.
  2. USIM (User services identity module) domain.
- For UMTS, the **USIM domain** contains the SIM which performs tasks such as encryption and authentication of users and it stores all required user related data for UMTS.
- For an enhanced program execution environment the USIM domain contains a microprocessor and USIM belongs to the service provider.
- **Mobile equipment domain** itself is end service in which functions for user interfaces as well as for radio transmission are included.

2. Infrastructure domain :

- The infrastructure domain is shared among all the users because it offers UMTS services to all accepted users.
- Infrastructure domain is subdivided into two domains:
  1. Access network domain.
  2. Core network domain.
- **Access network** domain includes RAN (Radio Access Networks) whereas function that are independent of access network are included in the **core network** domain.
- The core network domain is again divided into :
  1. Serving network domain.
  2. Home network domain.
  3. Transit network domain.
- The **serving network domain** includes all the functions used by users to access UMTS services.
- The **home network** domain performs all home network related functions of a user such as user data look-up.
- If the serving network and home network cannot contact directly then the **transit network domain** is required, to be used.

UMTS Interfaces :

- The interface points used in the UMTS architecture are :
  1. **Cu** : Interface between USIM and mobile equipment domain.
  2. **Uu** : Interface between user equipment and infrastructure domain.
  3. **Iu** : Interface between access and serving network domain.
  4. **Yu** : Interface between serving and transit network domain.
  5. **Zu** : Interface between serving and home network domain.

2.17.2 UTRA-Network (UTRAN) Architecture :

- The basic architecture of UTRAN is as shown in Fig. 2.17.2.

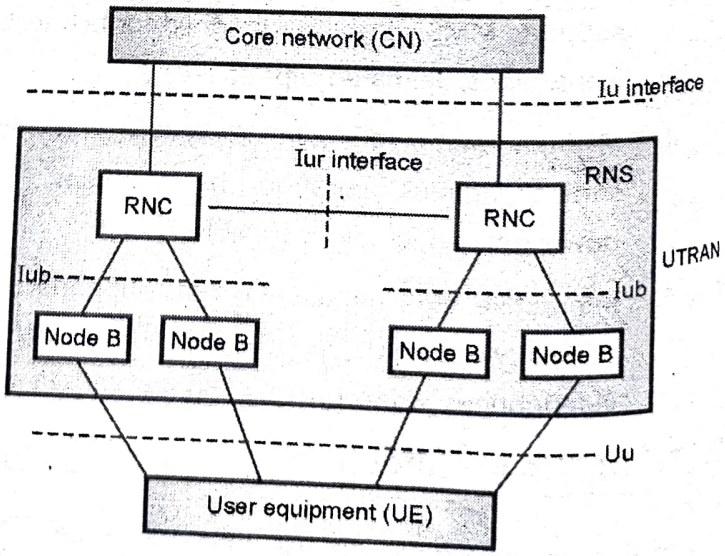

(G-2464) Fig. 2.17.2 : UTRAN architecture

Components of UTRAN :

- The two components of UTRAN are :
  1. RNS (Radio Network Subsystem).
  2. Node B.

- UTRAN architecture consists of many **RNS (Radio Network Subsystem)** controlled by **RNC (Radio Network Controller)** and includes many **node B** components as well.
- In UMTS, RNC and node B are similar to BSC and BTS respectively in GSM. Antennas which makes a radio cell are controlled by **node B.** UE (mobile device) is connected to one or more antennas.
- Through the interface Iu the core network is connected to RNC and RNC is connected to **Node B** through Iub interface Iur is the interface through which two RNCs are connected to each other.

Radio Network Controller (RNC) :

- The functions of RNC are as follows :

1. **Call admission control :**
- Within each cell the RNC computes the traffic and decides whether to accept or not the additional transmissions.

2. **Encryption / decryption :**
- Before the transmission over the wireless link the RNC encrypts all information which comes from the fixed network and vice versa.

3. **Congestion control :**
- Many stations share the radio resources available during packet oriented data transmission.
- In a cyclic fashion the RNC allocates bandwidth to every station by considering the QoS requirements.

4. **Radio resource control :**
- RNC controls radio resources of the cells which are connected through a node B.

5. **Protocol conversion, ATM switching & multiplexing :**
- ATM is the base of connection between RNCs, Node B and CN.
- The RNC needs to switch the connections to multiplex different data streams.

6. **Setup and release of radio bearer :**
- The function of RNC is to setup, maintain and release a logical data connection to a user equipment (UE).

7. **Allocation of code :**
- The RNC selects the CDMA codes used by a UE.

8. **Management :**
- The RNS provides interfaces to the tasks such as information regarding the current load, error states, current traffic required for the network operators.

9. **Power control :**
- A relatively loose power control is performed by the RNC. It controls transmission power is based on the interference values from other RNCs or other cells.

10. **RNS location and handover control :**
- Whether another cell is better suited for a certain connection or not is decided by RNC depending on the strength of signal received by UEs or node B.
- If handover is decided by RNC it informs the new cell an UE.
- If a UE moves Out of the range of one RNC then, a new RNC has to be selected which takes responsibility of the UE. This is known as **relocation.**

Node B :

- Node B is connected to one / more antennas which creates one / more cells.
- The cell may use either FDD or TDD or both. The main function of Node B is **inner loop power control** to moderate the near far effects.
- Connection qualities and signal strengths are measured by Node B, to exercise the power control
- Node B can support **soft handover** which occurs between different antennas of the same node B.
- Node B logically equivalent to the GSM base station.
- The functions of Node B are as follows :
  1. It supports inner and open loop power control
  2. It is used for the frequency and time synchronization.

3. It terminates U_u interface from user equipment.
4. Radio channel coding/decoding.
5. Error detection on transport channels.
6. Radio channel coding/decoding.
7. Multiplexing/demultiplexing of transport channels.

2.17.3 User Equipment (UE) :

- As shown in Fig. 2.17.2, UE is the counterpart of several nodes of architecture.
- As the counterpart of a node B, UE performs following functions :
  1. Signal quality measurements.
  2. Inner loop power control.
  3. Rate matching.
  4. Spreading and modulation.
- A the counterpart of RNC, UE performs following functions :
  1. Cooperation during handover.
  2. Cell selection.
  3. Encryption / decryption.
  4. Participation in the radio resource allocation process.
- As the counterpart of core network, UE performs following functions :
  1. It implements mobility management function.
  2. Bearer negotiation.
  3. Requests certain services from the network.

2.17.4 Core Network of UMTS (UMTS Network Architecture) :

- UMTS release 99 core network is as shown in Fig. 2.17.3 which consists of UTRAN RNS and GSM BSS. UMTS core network is similar in the context of GSM and GPRS explained earlier.
- The core network is divided into two domains, circuit switched and packet switched domains.

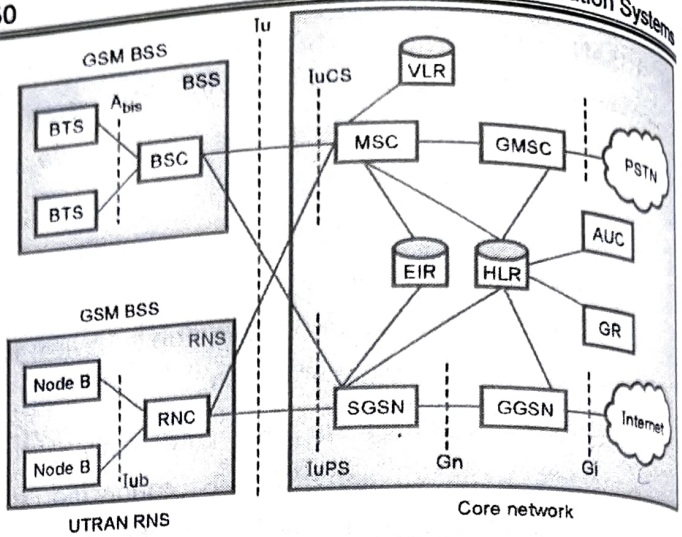

(G-2465) **Fig. 2.17.3 : UMTS core network**

- Some of circuit switched elements are MSC (Mobile Services Switching Centre), VLR (Visitor Location Register) and Gateway MSC (GMSC).
- Packet switched elements are SGSN (Serving GPRS Support Node) and GGSN (GPRS Support Node).
- Some network elements like EIR, HLR, VLR and AUC (authentication centre) are shared by both domains.
- The **Circuit Switched Domain (CSD)** is connected to RNS through IuCS interface which is a part of the Iu interface. The **PSD (Packet Switched Domain)** is connected to RNS through **IuPS** interface which is the part of Iu interface.
- For equipment identification both domains requires EIR database and HLR is required for location management. For user specific GPRS data GR (GPRS Register) and for authentication AUC are included.

2.17.5 UMTS Interfaces :

- The classification of UMTS interfaces are as shown in Fig. 2.17.4.

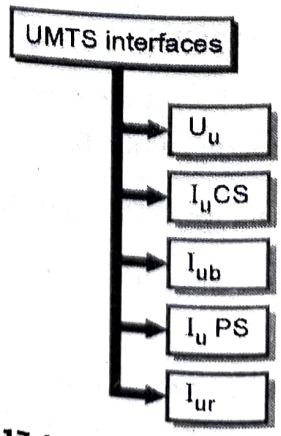

(G-2551) **Fig. 2.17.4 : Categories of UMTS interfaces**

1. U_u : It is interface between user equipment and the network. This interface is equivalent to U_m interface in GSM/GPRS.

2. I_u-**CS** : It is circuit switched interface between UTRAN and the core voice network. It carries voice traffic and signalling between UTRAN and the core voice network. This interface is similar to A - interface in GSM / GPRS.

3. I_{ub} : RNC used this interface in order to control multiple node B's. This interface is similar to A-bis interface in GSM / GPRS. This is open and main standardized interface.

4. I_u-**PS** : This is packet switched interface between UTRAN and core data network. It carries data traffic and signalling between UTRAN and core data network. This interface is equivalent to G_b interface in GSM.

5. I_{ur} : This interface provides support to inter MSC mobility. Mobile subscriber's data is transferred to new RNC when mobile subscriber is moving between areas served by different RNCS through the I_{ur} interface. The original RNC is a **Serving RNC** is and the new RNC is a **drift RNC**. In GSM / GPRS, there is no equivalent interface.

2.17.6 UMTS Specifications / UMTS Air Interface Specifications :

Table 2.17.1 : UMTS specifications / UMTS air interface specifications

Specification	Value
Channel Bandwidth	5 MHz
Multiple access scheme	CDMA
Data Rate	384 kbps to 2 Mbps
Duplex Mode	FDD and TDD
Downlink RF Channel Structure	Direct Spread (DS)
Chip Rate	3.84 Mcps
Frame Length	10 ms
Spreading Modulation	Balanced QPSK (downlink), Dual-channel QPSK (uplink) Complex spreading circuit
Data Modulation	QPSK (downlink), BPSK (uplink)
Coherent detection	User dedicated time multiplexed pilot (downlink and uplink) Common pilot in downlink
Channel Multiplexing in Downlink	Data and control channel are multiplexed
Channel Multiplexing in Uplink	Control and pilot channel time multiplexed I and Q multiplexing for data and control channel
Multirate	Variable spreading and multicode
Spreading Factors	4-256 (uplink), 4-512 (downlink)
Frequency spectrum	Uplink 1920 MHz-1980 MHz, downlink 2110 MHz-2170 MHz.
Coding technique	Orthogonal variable spreading factor (OVSF)

2.18 Handover / Handoff in UMTS :

Classes of handover :

1. Soft handover.
2. Hard handover.

2.18.1 Soft handover :

- Soft handover mechanism is available in FDD mode.
- Basic property of CDMA is **microdiversity**, due to this soft handovers are well known from traditional CDMA.

- UE may receive signals from different antennas (upto three) which belongs to several different node Bs as shown in Fig. 2.18.1(a).

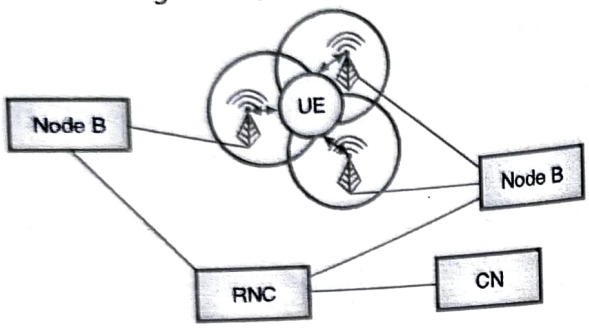

(G-2468) **Fig. 2.18.1(a) : Soft handover**

- RNC splits the data stream towards UE and it forwards it to Node Bs. Received data is again combined by UE.
- On the other direction UE sends data which is then received by all involved node Bs.
- The data streams received from the node Bs are then combined by RNC. At the same time UE receives data from different antennas, this fact makes handover soft.
- This is not an abrupt process as movement from one cell to another is smooth.
- With respect to shading, fading and multi-path propagation macro-diversity makes more robust transmission.
- Suppose one path is blocked by any barrier there may be good chances of receiving data using another antenna.
- At the time of soft handover, from all involved node Bs UE receives power control commands.
- As UE receives a command to lower UE lowers the transmission power which avoids interference.
- All methods related to soft handover are located in UTRAN, however it is not supported by core network.

2.18.2 Hard Handover :

- This handover is already discussed in GSM. At a certain point in time switching between different antennas / systems is performed.
- Hard handover can be used only in UTRA TDD.
- Among the slots of different frames switching between TDD cell is performed.
- Changing the carrier frequency i.e. **Inter frequency handover** is hard handover.
- At the same time receiving data at different frequencies requires more complex receiver as compared to the data receiving from different sources at the same carrier frequency.
- In UMTS all **inter system handovers** are hard handover which includes handover occurs to and from GSM or other IMT-2000 systems.
- **Inter segment handover** is special type of handover to satellite system which is again hard handover because different frequencies are used.
- UMTS defines **compressed mode** transmission of UTRA-FDD to enable UE to listen into GSM or other frequency bands. UE stops all transmission.
- Before and after the break in transmission spreading factor can be lowered or using different coding schemes less data is sent which avoids data loss.
- The situation where soft handover takes place between two node BS which do not belong to the same RNC is as shown in Fig. 2.18.1(b).

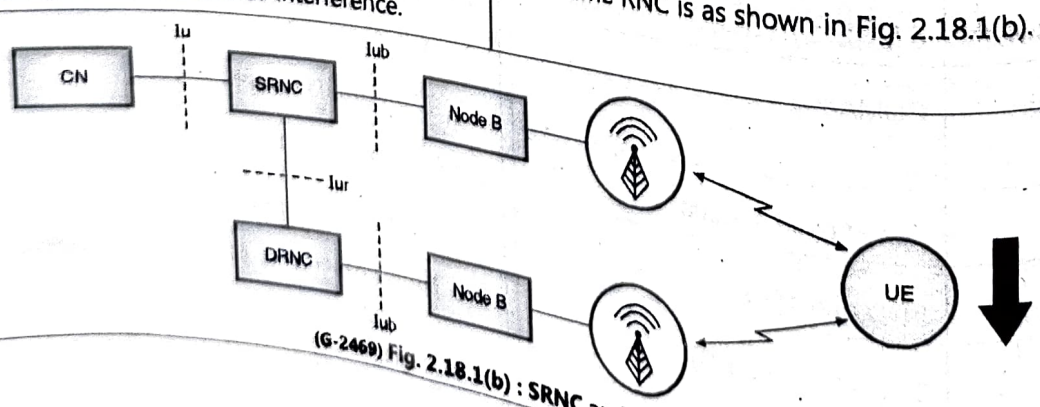

(G-2469) **Fig. 2.18.1(b) : SRNC and DRNC**

- In this case one RNC performs the connection control and it forwards all data to and from the core network.
- If the UE moves from upper to lower cell the upper RNC acts as **SRNC (Serving RNC)** whereas lower RNC acts as **DRNC (Drift RNC).**
- Via Iur interface SRNC forwards received data from the CN to its node B and to the DRNC.
- This mechanism is not available in GSM. DRNC forwards data received by the lower node B to the SRNC.
- Both data streams are combined in SRNC and single stream of data is forwarded to the CN.
- From simultaneous reception CN does not notice anything.
- If the UE moves more down and it drop out the transmission area of upper node B, resources are reserved for data transmission by two RNCS.
- SRNC relocation performed to avoid wasting resources. CN is involved in this process so it is hard handover.

2.18.3 Types of Handover in UMTS :

- Many common handover types in a combined UMTS / GSM network are as follows :
  1. Intra-node B, Intra-RNC.
  2. Inter-node B, Intra-RNC.
  3. Inter RNC.
  4. Inter MSC.
  5. Inter-system.
- Fig. 2.18.1(c) shows overview of different handover types.

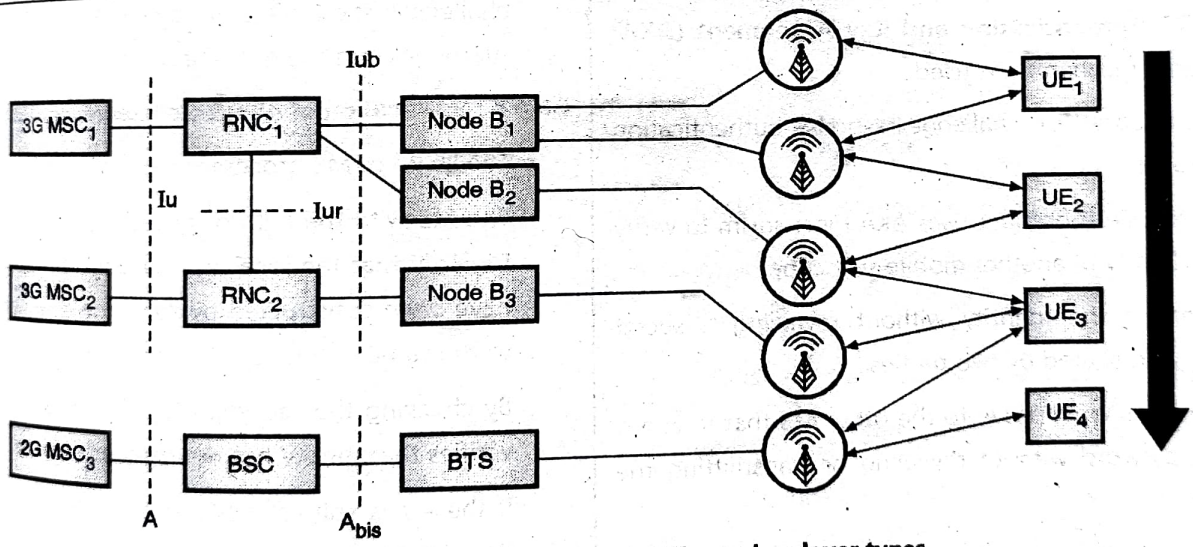

(G-2470) Fig. 2.18.1(c) : Overview of different handover types

1. **Intra-node B, Intra-RNC :**
   - UE_1 goes from one antenna of node B_1, to another antenna such type of handover is known as **softer** handover.
   - In this type Node B_1 performs splitting and combining of data streams.
2. **Inter-node B intra-RNC :**
   - From Node B_1, to node B_2, UE_2 moves. In this type by combining and splitting data RNC_1 supports the soft handover.
3. **Inter-RNC :**
   - Two different handovers can takes place when UE_3 moves from node B_2 to B_3.
   - As shown in Fig. 2.18.1(b) **Internal Inter-RNC** handover is not visible for CN.
   - In this case RNC_1 acts as SRNC and RNC_2 acts as DRNC.
   - All the time through the interface Iu, CN will communicate.

- When relocation of Iu takes place the handover is known as **external Inter-RNC** handover.
- By the same MSC_1 communication is handled now the external handover is hard handover.

4. **Inter-MSC** :
- It might be the case that MSC_2 takes over and it performs hard handover of the connection.

5. **Inter-system** :
- From a 3G UMTS network to 2G GSM network UE_4 moves on.
- For real life usability of the system this hard handover is important due to the restricted 3G coverage in the beginning.

2.19 UMTS Security Process :

Principle :

- In order to achieve the authentication features, **UMTS Authentication and Key Agreement (AKA)** security mechanism is used.
- AKA is based on challenge/response authentication protocol.
- The mobile subscriber uses AKA mechanism to verify the identity of another mobile subscriber.
- It verifies the identity without revealing a secret password shared by two parties.
- Each MS should prove to the other MS that it knows the password without revealing or transmitting the same.
- In order to complete the security process, the related information about MS should be transferred from home network to the serving network of Mobile subscriber.
- The HLR/AuC of home network provides the VLR/SGSN of serving network with Authentication Vectors (AVs), each one holding the information fields.
- AKA procedure is summarized in the following steps :

Step 1 : Requests of Authentication Vectors (AVs) :
- Visited network's VLR or SGSN requests a set of Authentication Vectors (AVs) from the HLR/AuC from the MS's home network.

Step 2 : Calculation of Authentication Vectors (AVs) :
- HLR/AuC computes an array of AVs by means of authentication algorithm and the MS's private secret key.
- This key is stored in HLR/AuC of home network and the user Identity module (USIM) in MS's mobile subscriber.

Step 3 : Transmission of Authentication Vectors (AVs) :
- HLR/AuC responds to the visited network's VLR/SGSN by sending back n authentication vectors.

Step 4 : Challenge to MS :
- Visited network's VLR/SGSN selects a single AV and challenges the MS's USIM by sending the RAND and AUTN fields in the Authentication vector to it.

Step 5 : Verification of AVs & Generation of RES :
- The USIM of MS processes the AUTN.
- The MS with the help of private secret key K is able to verify that the received challenge data could only have been constructed by someone who had access to the same secret key.
- By checking the sequence number (SEQ) field, USIM verifies that the AV has not been expired.
- If the AV is still valid and network is authenticated, the USIM generate a confidentiality Key (CK), Integrity key (IK) and response for the network (RES).

Step 6 : Reply by MS via RES :
- The MS responds with RES to the visited network.

Step 7 : Verification of RES :
- VLR/SGSN of Visited network verifies that the response is correct.
- It verifies the response by comparing with the Expected Response (XRES) from the current AV with the response received from the USIM of mobile subscriber.

2.19.1 Advantages of UMTS :

1. Broad offer of services.
2. Speed, variety and user friendliness of a service is improved as compared with GSM.
3. Only bearer services are standardized.
4. High speed data transmission.
5. Improved voice quality.
6. Global roaming across networks.
7. Improved security.
8. Service flexibility.

2.19.2 Disadvantages of UMTS :

1. Expensive input fees for 3G service licenses.
2. It is a challenge to build the necessary infrastructure for 3G.
3. Additional expense of 3G phones.
4. Large cell phones.

2.19.3 UMTS Applications :

1. Fast Internet / intranet.
2. Streaming / download (video, audio).
3. Videoconferences.
4. Multimedia-messaging, E-mail.
5. Mobile E-commerce.
6. Location based services.
7. Mobile entertainments.

2.19.4 Comparison of UMTS and GSM :

Table 2.19.1 gives the comparison between UMTS and GSM.

Table 2.19.1 : Comparison of UMTS and GSM

Sr. No.	Parameter	UMTS	GSM
1.	Carrier spacing	5 kHz	200 kHz
2.	Power control frequency	1.5 kHz	2 Hz or lower
3.	Quality control	Radio resource management	Network planning
4.	Packet data	Load based packet scheduling	Time slot based scheduling with GPRS
5.	Downlink transmit diversity	Supported for improving dL capacity	Not supported by standard but can be applied.

Review Questions

Q. 1 What is mobile communication ?

Q. 2 State various wireless communication systems.

Q. 3 Define the following :

1. Base station.
2. Control channel.
3. Forward channel.
4. Reverse channel.
5. Mobile station.

Q. 4 Explain the concept of half duplex communication.

Q. 5 What is a simplex communication ? Give one example.

Q. 6 Explain the concept of full duplex communication.

Q. 7 Explain FDD and TDD.

Q. 8 Explain the concept of cellular telephone system.

Q. 9 Draw general block diagram of mobile phone system and explain its operation.

Q. 10 What is MTSO ?

Q. 11 Define cell and cluster.

Q. 12 What is frequency reuse ?

Q. 13 Name the conditions which are controlled by the MTSO in the transceiver.

Q. 14 What are cells ?

Q. 15 Explain the handoff procedure.

Q. 16 State the frequency bands used in GSM.

Q. 17 Write a note on frequency reuse in cellular system.

Q. 18 State various handoff strategies.

Q. 19 Define "Dwell time".

Q. 20 Define :

1. Hard handoff
2. Soft handoff

Q. 21 Explain the concept of delayed handoff and state its advantages.

Q. 22 Explain :

1. Forced handoff.
2. Queued handoff.

Q. 23 What is GSM ?

Q. 24 What are the services provided by GSM ?

Q. 25 State important features of GSM.

Q. 26 Explain the GSM system architecture.

Q. 27 Give the specifications of GSM.

Q. 28 Write a note on : Signal processing in GSM.

Q. 29 Explain GPRS protocol stack.

Q. 30 Write the characteristics of GPRS.

Q. 31 State advantages, disadvantages and applications of GPRS.

Q. 32 Compare : GSM and GPRS.

Q. 33 Write a short note on : UMTS Releases and Standards.

Q. 34 With neat diagram explain UTRA-Network (UTRAN) Architecture.

Q. 35 Compare UMTS and GSM.

□□□

Unit II

Chapter 3

Introduction to 5G

Syllabus

Introduction, 5G network architecture, Applications, 5G enabled technologies, Recent trends in Telecommunication industries.

Chapter Contents

3.1 5G and Above Wireless Networks

3.2 Functional Architecture of 5G

3.3 5G Enabled Technologies

3.4 Characteristics of 5G

3.5 Recent Trends in Telecommunication Industries

3.6 Comparison of Various Mobile System Generations

3.1 5G and Above Wireless Networks :

- The 4G technology has now been deployed and the research for the next generation named as 5G has already begun.
- It is considered to be the next major phase of mobile telecommunication standard after 4G.
- The 5G standard will be made commercially available by 2020.
- This standard is way beyond just the faster data speeds or faster mobile devices.
- 5G will provide an access to high and low speed data services.
- It will involve combination of existing and evolving systems.

3.1.1 Why 5G ?

- Fifth generation technology is useful because of the following reasons :
  1. It provides very High speed, high capacity, and low cost per bit.
  2. It supports interactive multimedia, voice, video, Internet, and other broadband services, more effectively.
  3. 5G technology offers Global access and service portability.
  4. It can provide the high quality services due to high error tolerance.
  5. 5G technology uses remote management so that user can get better and fast solution.
  6. With the use of 5G technology the uploading and downloading speed will be very high.

3.1.2 Features of 5G :

- Following are the most important features of 5G :
  1. Ubiquitous connectivity.
  2. It provides Speed up to 10 Gbit/s.
  3. The 5G technology supports virtual private network.
  4. The uploading and downloading speed of 5G technology is high.
  5. 5G network is very fast and reliable.
  6. Larger data volume per unit area (i.e. high system spectral efficiency).
  7. High capacity to allow more devices connectivity concurrently and instantaneously.
  8. Lower battery consumption.
  9. It provides better connectivity irrespective of the geographic region.
  10. Larger number of supporting devices.

3.1.3 Specifications of Fifth Generation :

Table 3.1.1 : Specifications of fifth generation

Sr. No.	Feature	Value / Description
1.	Generation	5G (2020)
2.	Technology	WWW, IPv6
3.	Standard	Yet to be finalized
4.	Switching	Packet
5.	Frequency	15 GHz
6.	Data speed	> 1 Gbps
7.	Multiplexing	MC-CDMA, LAS-CDMA, OFDM
8.	Core network	Internet
9.	Services	Interactive multimedia, Voice over IP, Virtual reality, Augmented reality, IOT etc.
10.	Handoff	Horizontal and vertical

3.1.4 Expectations in 5G Network :

- In future, 5G will be necessary worldwide because of the increasing traffic rates of data, voice, and video streaming.
- 5G technology will have the capability to share the data everywhere, every time, by everyone.

The 5G technology is expected to cater the following requirements :

1. 10-100 times higher data rate.
2. 10 times longer battery life for low power devices.
3. 10-100 times higher number of connected devices.
4. 5-times reduced end to end latency.
5. 1000 times higher mobile data volume per area.

3.1.5 Difference Between 4G and 5G :

The key differences between 4G and 5G network architecture are as follows :

1. Latency, speed and bandwidth.
2. Potential download speeds.
3. Base stations.
4. OFDM encoding.
5. Cell density.

1. Latency, speed and bandwidth :

- The biggest difference between 4G and 5G networks is latency.
- The latency promised by 5G is low latency under 5 milliseconds, while 4G latency ranges from 60 ms to 98 ms.
- Low latency requires higher bandwidth and indicates that the speed of 5G networks is higher than that of the 4G networks.
- In addition, due to lower latency there is an increase in the download speeds.

2. Potential download speeds :

- The download speeds in 5G are much higher than those obtainable in the 4G networks.
- The download speeds in 4G can be up to 1 Gbps and 5G's goal is to increase that tenfold for maximum download speeds of 10 Gbps.

3. Base stations :

- Another important difference between 4G and 5G is the base station required to transmit signals.
- The 4G transmits signals from cell towers. However, 5G uses small cell technology, due to its faster speeds and mm Wave frequency bands.
- Due to high frequency carriers deployed in 5G the base stations are of very small size (size of a pizza box) and present at multiple locations.
- 5G networks will still use cell towers when it uses the lower frequency spectrums.
- When used in the mm wave range (above 6 GHz) the carriers must deploy small cells in various areas.
- However, the mm wave has weaker signals that travel across shorter distances.
- Therefore, small cell stations must be placed more frequently in 5G-capable areas to ensure the signals reach users and businesses.

4. OFDM encoding :

- OFDM is used to split different wireless signals into separate channels to avoid interference, which also provides greater bandwidth.
- OFDM encodes data on different frequencies. Therefore, this can enhance 4G and 5G download speeds.
- These networks would have their own signal channels rather than a shared one between them.
- Hence, 4G uses 20 MHz channels, while 5G will use 100 MHz to 800 MHz channels.

5. Cell density :

- Due to small cell technology, 5G can provide more cell density and enhance network capacity.
- While 4G also promised this it could never completely met its promises.
- 5G will hopefully succeed where its predecessor falls short.

- The 5G networks will be denser, which means they have more capacity to support more users and connected devices, which leads to increased mobile device and connection capacity.

3.2 Functional Architecture of 5G :

- The system model of 5G is entirely IP based model designed for the wireless and mobile networks is as shown in Fig. 3.2.1.

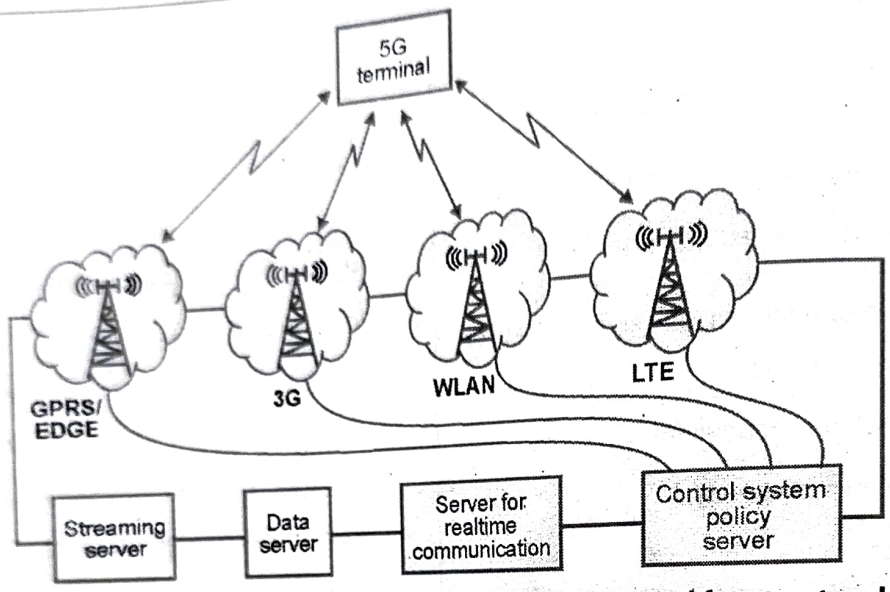

(GT-44) Fig. 3.2.1 : 5G structure based on combining the current and future networks

- Fig. 3.2.1 shows the 5G structure based on combining the current and future networks.
- As shown in Fig. 3.2.1, the system consists of a main user terminal and a number of independent and autonomous radio access technologies such as GPRS/EDGE, 3G, WLAN and LTE etc.
- Each radio technology in the architecture of 5G is considered as the IP link for the outside internet world.
- The IP technology is designed entirely to make sure the sufficient data control for suitable routing of IP packets related to a certain application connections i.e. sessions between client applications and servers somewhere on the Internet.

3.2.1 Open Wireless Architecture of 5G Protocol Stack :

- The 5G concept in wireless technology corresponds to the Open System Interconnected (OSI) layers.
- Fig. 3.2.2 shows the correspondence of ISO-OSI reference model and the 5G model.

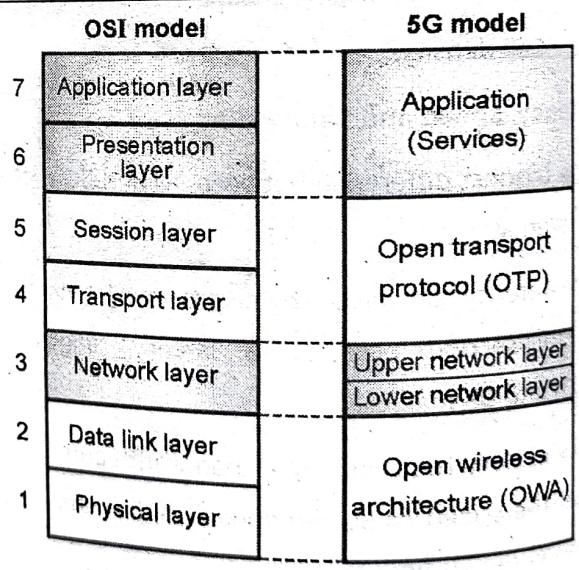

(GT-25) Fig. 3.2.2 : 5G protocol stack

- 5G model consist of four basic layers :
  1. Open Wireless Architecture (OWA).
  2. Network layer.
  3. Open Transport Protocol (OTP).
  4. Application layer.

1. Open Wireless Architecture (OWA) :

- It is lowest layer of 5G model. It corresponds to the physical and data link layer of the OSI model.

2. **Network layer :**

- As shown in Fig. 3.2.2, network layer of 5G is subdivided into two layers namely upper network layer and lower network layer.
- The network layer of 5G corresponds to the network layer of OSI model and it is based on IP.
- Due to problems in IPv4 and IPv6, all mobile networks will use mobile IP standard in 5G.
- Each mobile terminal in 5G will be a Foreign Agent (FA), maintaining Care of Address (CoA) mapping between its fixed IPv6 address and the CoA address for the current wireless network.
- A mobile terminal can be attached to several mobile or wireless networks at the same time.

3. **Open Transport Protocol (OTP) :**

- It corresponds to the transport (layer 4) and session (layer 5) layers of the OSI model.
- In all Transmission Control Protocol (TCP) versions, it is considered that the packet loss takes place due to network congestion.
- But in wireless technology, losses can occur due to a higher bit error ratio in the radio interface.
- Hence, TCP adjustments and alterations are anticipated for the mobile and wireless networks that retransmit the damaged TCP segments over the wireless link only.
- It will be suitable to have a transport layer for 5G mobile terminals, which can be downloaded and installed.
- Such mobiles will have the ability to download the desired version specifying wireless technology installed at the Base station. This is known as Open Transport Protocol (OTP).

4. **Application (Services) layer :**

- The application layer is the topmost layer of 5G and it corresponds to the application layer of the OSI model.
- Application layer provides intelligent QoS management over a variety of networks.
- It provides the quality testing service and store the measurement information in the database at the mobile terminal.
- In the 5G mobile phone, the QoS parameters such as delay, jitter, losses, bandwidth and reliability, etc will be stored in a database.
- Application layer selects the best wireless connection for the given service.

3.3 5G Enabled Technologies :

- To make 5G and beyond networks a reality, many advanced ideas have been proposed and analyzed in recent years.
- The major key enabling technologies that have been considered for 5G and 6G systems are as given below :
  1. Small cells.
  2. Beamforming.
  3. Millimeter (mm) waves.
  4. Device centric architecture.
  5. Full-duplex technology.
  6. Massive MIMO.
  7. NOMA.

3.3.1 Small Cell Concept :

Definition :

- A small cell is a broad term used to describe a miniature radio Access Point (AP) or wireless network base station with a low Radio Frequency (RF) power output, footprint and range.

Functions :

- The functions of small cells are to enhance cellular network coverage and capacity in areas such as densely populated city centers where user demands are the highest.

- They also significantly improved signal penetration and ensure superior coverage.

Working of small cells :

- Generally the operator-controlled small cells are deployed indoors or outdoors in a licensed, shared or unlicensed spectrum.
- These are primarily the miniature base stations and have very small physical size.
- The macro-cells are the tall cell towers that are installed on the highway or on top of buildings.
- On the other hand, the small cells are much smaller, about the size of a pizza box and are low power devices.
- Because they are small and compact, they are installed every few blocks to complement macro-cells in densely populated areas.
- The mobile operators that run the carrier networks attach small cells to physical structures, such as the sides of buildings, streetlights and signs.
- The small cells are essential for the transmission of data to and from different wireless devices.
- The small cells used in 5G networks get their connection via a macro-cell, before sending data from one small cell to another in a relay. This helps carry signals over much larger distances.
- Small cells enhance macro communications networks, by boosting coverage in a specific area by adding targeted capacity.
- They also support new services and deliver enhanced user experience by enabling high-speed wireless Broadband.

Spectrum and range :

- Small cells transfer data using low, mid and high band spectrum.
- They also use multiple spectral frequencies for boosting network bandwidth, increasing data transmission and for improving speed.
- The range of small cells is limited from 10 meters to 2 kilometers depending on the type of small cell.

Types of small cells :

- There are different types of small cells.
- They have different ranges, form factor and power levels.
- Out of them, the largest small cell units in used in the urban, outdoor applications and the smallest for indoor applications.
- The three types of small cells are the following :
  1. Femto cells.
  2. Pico cells.
  3. Micro cells.

1. Femto cells :

- These devices are similar to wireless routers and have a typical maximum range of 10 m.
- Femto cells can only accommodate a few users at a time and are usually used for indoor applications.

2. Pico cells :

- Pico cells can have an extensive range of up to 200 m.
- Therefore, they can support a maximum of 100 users and are typically installed in larger indoor areas, such as hospitals, airports and train stations.

3. Micro cells :

- These small cells have a range of up to 2 km. Micro cells are usually attached to traffic lights and street signs.

Advantages of small cells :

- Mobile operators and their customers experience the following benefits from small cells.
  1. They are quick and easy to install.
  2. They can be deployed without highly technical skill sets.
  3. Small cells improve coverage.

4. They boost capacity in densely populated urban areas.
5. Small cells are cheaper than macro cells.
6. They are highly flexible.
7. They can extend the battery life of mobile devices.

Limitations and challenges of small cells :

- There are certain limitations and challenges for the small cells.
- Some of them are as follows :

1. Operators must ensure they have backhaul-either fibre or wireless-at the site.
2. There must be an appropriate power source and operators must have physical access to the site.
3. This may need complicated or lengthy negotiations with the landowner.
4. One of the biggest challenges within the world of 5G small cells is coming up with a set of industry standards and definitions for this emerging technology.

3.3.2 Massive MIMO :

- Massive MIMO is the new wireless access technology in 5G, in both sub-6 GHz and mm Wave bands.
- The concept of massive MIMO has been demonstrated in Fig. 3.3.1.

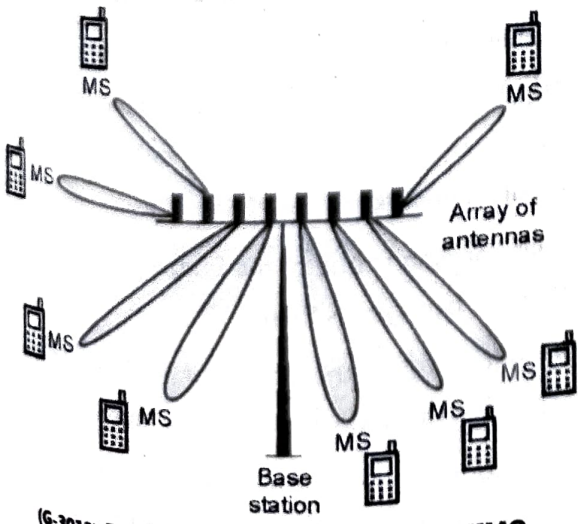

(G-3013) **Fig. 3.3.1 : Concept of massive MIMO**

- Massive MIMO is a multi-user MIMO (Multiple-Input Multiple-Output) technology that can provide uniformly good service to wireless terminals in high-mobility environments.
- In massive MIMO the base stations are equipped with arrays of many antennas.
- These antenna arrays are used to serve many terminals simultaneously, using the same time-frequency resource.
- The word "massive" indicates that a large number of antennas are being used and does not refer to the physical size.
- The rectangular antenna arrays use the 2 GHz frequency band and contain around 200 dual polarized elements.
- The antennas are half-wavelength-spaced and have a size of about 1.5 × 0.75 meters large.
- The highly directional antennas in the array have an adjustable beam pattern and each beam can be precisely designed to serve a specific mobile station.
- Thus massive MIMO uses the beamforming technique for its operation.
- The use of precise beams reduces the amount of transmitted power per mobile customer and avoids interference between adjacent mobile stations.
- Massive MIMO is implemented in two topologies i.e. FDD and TDD. In FDD, different frequencies are used on Downlink (DL) and Uplink (UL).
- In TDD, same frequency is used on downlink and uplink.
- TDD benefits due to channel reciprocity as channel estimation using UL (Uplink) can be utilized for downlink beamforming and hence leads to less overhead.
- Massive MIMO uses TDD mode for its operation and the downlink beamforming makes use of the uplink-downlink reciprocity of radio propagation.

- That means, the base station array uses channel estimates obtained from uplink pilots transmitted by the terminals to learn the channel in both directions.
- This makes Massive MIMO entirely scalable with respect to the number of base station antennas.
- Base stations in Massive MIMO operate autonomously, with no sharing of payload data or channel state information with other cells.

Advantages of Massive MIMO :

- As a key building block of 5G, massive MIMO has a number of benefits for both network operators and end users as follows :

1. **Improved spectral efficiency :**
   - The massive MIMO technology improves spectral efficiency.
   - That means, it can improve network capacity for the same amount of spectrum.
   - This enables the operators to maximize their investments in this expensive resource.
2. **Supports larger number of users :**
   - Massive MIMO, in conjunction with beamforming technology enables highly targeted use of spectrum, supporting a larger number of users in the cell.
3. **Improves end-user experience :**
   - Due to the highly targeted use of spectrum and reduced interference, massive MIMO improves end-user experience in densely populated areas.
4. **Higher connection reliability and reduced interference :**
   - Other potential benefits are, higher connection reliability and increased resistance to interference or intentional jamming.
5. **Improved indoor coverage :**
   - Massive MIMO networks are more responsive to devices transmitting at higher frequencies. This improves the indoor coverage.

Disadvantages of Massive MIMO :

- Following are the drawbacks or disadvantages of Massive MIMO :

1. Massive MIMO units are costlier than the traditional radio units.
2. The antenna design is more complex.
3. Use of FDD can lead to feedback overhead. Hence TDD is preferred.
4. Spacing between antennas is very small which requires packing of entire hardware into a small space.
5. Massive MIMO requires complex signal processing algorithms.
6. It is sensitive to beam alignment with the mobile stations, as extremely narrow beams are being used.

3.3.3 Beamforming :

- Today's mobile users need faster data speeds and more reliable service.
- The next generation of wireless networks-5G promises to deliver that, and much more.
- Right now, though, 5G is still in the planning stages and companies and industry groups are working together to figure out exactly what it will be.
- But they all agree on one matter : As the number of mobile users and their demand for data rises, 5G must handle far more traffic at much higher speeds than the base stations that make up today's cellular networks.
- Beamforming is one of the burgeoning technologies that will help get us there.
- Beamforming is the ability of the base station to adapt the radiation pattern of the antenna.
- Beamforming helps the base station to find a suitable route for delivering data to the mobile user.

It also reduces interference with nearby users along the route due to very narrow beams used, as shown in Fig. 3.3.2.

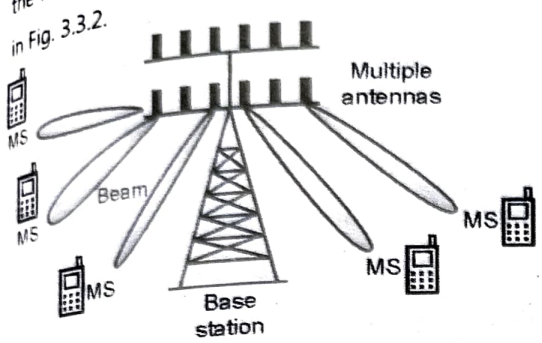

(G-3012) **Fig. 3.3.2 : Concept of beamforming in 5G**

As shown in Fig. 3.3.2, the beamforming combined with the massive MIMO consists of antenna arrays at the base station with each antenna having a very sharp adjustable beam.

It is a traffic-signaling system for cellular base stations that identifies the most efficient data-delivery route to a particular user, and it reduces interference for nearby users in the process.

Depending on the situation and the technology, there are several ways to implement it.

Beamforming is a technique that constructs the antenna radiation pattern as shown in Fig. 3.3.2.

Beamforming has several advantages for 5G networks and beyond.

Depending upon the situation, beamforming technology can be implemented in several different ways in future networks.

Beamforming with massive MIMO :

For massive MIMO systems, beamforming helps with increasing spectrum efficiency, and for millimeter waves, it helps in boosting data rate.

In massive MIMO systems, the base station can send data to the user from various paths, and beamforming here determines the packet movement and arrival time which allows more users to send data simultaneously.

Beamforming with millimeter waves :

- Since the millimeter waves cannot penetrate through obstacles and do not propagate to longer distances due to a shorter wavelength, beamforming here helps to send concentrated beams towards the users.
- Thus, beamforming helps a user to receive a strong signal without interference with other users.

Beam management :

- The beam management is nothing but a procedure with a set of phases like :
  1. Beam sweeping.
  2. Beam measurements.
  3. Beam determination.
  4. Beam reporting.
  5. Beam failure recovery.

Types of beamforming :

- There are 3 types of beamforming used in 5G :
  1. Analog beamforming.
  2. Digital beamforming.
  3. Hybrid beamforming.

Benefits of beamforming :

- The beamforming alongwith massive MIMO systems has the following advantages :
  1. Higher energy efficiency.
  2. Improvement in spectral efficiency.
  3. Higher system security.
  4. Applicability for mm-wave bands.

Drawbacks of beamforming :

- Following are the disadvantages of Beamforming technique :
  1. Higher hardware complexity due to use of multiple antennas and other hardware systems.
  2. The beamforming system needs to use advanced high processing DSP chip for the mathematical algorithms in the design.

3. Higher cost due to the use of increased hardware resources and advanced DSP chip.
4. Higher power requirement due to use of more resources. Hence battery in beamforming system drains faster.

3.3.4 Millimeter Waves :

Definition :

- Millimeter Wave (also known as mmWave) can loosely be defined as electromagnetic waves with frequency range from 30 GHz to 300 GHz because this corresponds to the wavelengths of 1 mm to 10 mm.

Principle :

- This frequency range corresponds to the highest band of Radio Frequency Bands, namely Extremely High Frequency (EHF) band.
- The frequencies below 6 GHz are generally used for cellular communication, while frequencies above 6 GHz are used for other services like medical imaging, microwave remote sensing, amateur radio, terahertz computing and radio astronomy.
- Due to the massive increase in data traffic the radio frequency spectrum has become congested which results in limited bandwidth for a user, causing a slower and unreliable connection.
- One solution to this problem is to use frequencies above 6 GHz for wireless communication.
- The frequencies above 6 GHz have never been used for wireless communication, and there has been a lot of research going on with broadcasting millimeter waves.
- Millimeter waves are thus very high frequency radio waves which find their applications in the 5G and other advanced networks.
- The main advantage of mm Waves is that they can provide bandwidth ten times higher than that of the entire 4G cellular band.
- These high-frequency waves are used in some satellite application, but it has never been used for mobile broadband.
- Since millimeter has a smaller wavelength, they are not suitable for long-range applications.
- Another problem with millimeter waves is that they cannot penetrate buildings and obstacles, and they tend to get absorbed by rain.

Benefits of mm wave technology :

- Some of the important advantages of this technology are as follows :
  1. It can transmit a large amount of information with low latency.
  2. Higher bandwidth.
  3. Improved sensor resolution.
  4. Reduced latency.
  5. Higher transmission speed.
  6. Equipments and components are of smaller size.

Disadvantages of mm wave technology :

- Compared with microwave, using of millimeter wave also has the following disadvantages :
  1. Higher costs required to manufacture greater precision hardware and components with smaller size.
  2. Lower sensitivity in a receiving system due to lesser energy collected by the smaller size antenna.
  3. Due to significant attenuation of extremely high frequencie waves, the millimeter waves cannot be used for long distance applications.

Applications of mm wave technology :

- The applications of millimeter wave can be classified to following categories : Communication, sensor, studies and experiments and weapons systems.

3.3.5 NOMA :

Non-Orthogonal Multiple Access (NOMA) is one of the most promising multiple access techniques in next-generation wireless communications.

As compared to the Orthogonal Frequency Division Multiple Access (OFDMA), which is the Orthogonal Multiple Access (OMA) technique, NOMA has the following advantages :

1. Enhanced spectrum efficiency.
2. Reduced latency with high reliability.
3. Massive connectivity.

The NOMA system serves multiple users using the same resources in terms of time, frequency, and space domain.

NOMA can achieve a higher data rate compared to OMA.

However, the required processing of NOMA can be higher than OMA.

In recent years, Non-Orthogonal Multiple Access (NOMA) schemes have received significant attention for the fifth generation **(5G)** cellular networks.

This is due to the ability of **NOMA** to serve multiple users using the same time and frequency resources.

Recent studies demonstrate that NOMA has the potential to used in various 5G communication applications such as, Machine-to-Machine (M2M) communications and the Internet-of-Things (IoT).

NOMA can accommodate many more users via non-orthogonal resource allocation.

How does NOMA work ?

In NOMA, each user operates in the same band and at the same time where they are distinguished by their power levels.

NOMA uses Superposition Coding (SC) at the transmitter such that the Successive Interference Cancellation (SIC) receiver can separate the users both in the uplink and in the downlink channels.

- A **non orthogonal** transmission is not sensitive to errors of synchronization.

Block diagram :

- The block diagram of NOMA is as shown in Fig. 3.3.3 which is a multiple access technique employed in 5G cellular wireless network.

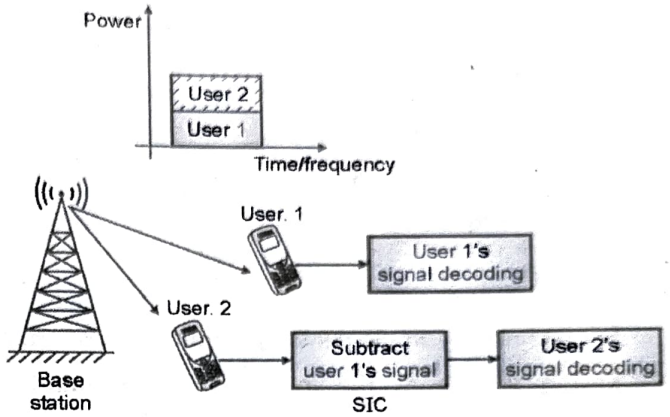

(G-2793) Fig. 3.3.3 : NOMA in downlink

- The main function of NOMA is to serve multiple UEs (User Equipments) using a single 5G-NB (Node B or Base Station) on same time/frequency resources.
- There are two main techniques employed in NOMA for multiple access :

1. Power domain :

- In power domain, NOMA achieves multiplexing based on different power levels.

2. Code domain :

- In the code domain, NOMA achieves multiplexing based on different codes.

Transmit side :

- Refer Fig. 3.3.3. A special coding called **Superposition Coding (SC)** is used in NOMA at the transmitter end.
- NOMA assigns different power levels to different users.
- As shown in Fig. 3.3.3, the base station transmits superposed signals to User-1 and User-2.
- Here, User-2 uses high gain and User-1 uses low gain as shown, in order to successfully receive signals with different power levels.

- Hence, User-2 is known as a strong user while User-1 is known as a weak user.

Receive side :

- At each receiver, NOMA uses **SIC** (Successive Interference Cancellation) technique to retrieve data.
- On the receiving side, User-2 (strong user) subtracts signal of user-1 through SIC and later decodes its own signal.
- Whereas, User-1 (weak user) treats signal of User-2 as noise and decodes its own signal directly as shown in Fig. 3.3.3.

Type of modulation :

- **5G** technology implements Quadrature Phase Shift Keying (QPSK) as the lowest order **modulation** format.
- It has a demerit of providing the slowest data throughput and the advantage of providing the most robust link which can be used when signal levels are low or when interference is high.

Classification of NOMA :

- We divide NOMA schemes into two categories :
  1. Power-domain multiplexing.
  2. Code-domain multiplexing.
- Power-domain NOMA attains multiplexing in power domain and code-domain NOMA achieves multiplexing in code domain.
- One way of implementing power-domain NOMA is utilizing Superposition Coding (SC) at the transmitter and Successive Interference Cancellation (SIC) at the receiver.
- SC allows the transmitter to transmit multiple user's information at the same time.
- To decode the superposed information at each receiver, SIC technique can be used.
- The main idea of SIC is that user signals are successively decoded.
- After one user's signal is decoded, it is subtracted from the combined signal before the next user's signal is decoded.

Resource management in NOMA networks :

- One of the main challenges in NOMA networks is to attain a compromise between the bandwidth efficiency and the energy efficiency.
- This can be achieved with the help of following resource management techniques :
  1. Intelligent control of the PA of the superimposed signals.
  2. Dynamic scheduling of the users for the sub-channels.
  3. Forming spatially correlated clusters.

Implementation challenges of NOMA :

- Although NOMA is a promising candidate for 5G and beyond, there are several implementation challenges to be tackled, such as
  1. Error Propagation in SIC.
  2. Channel Estimation Error and Complexity for NOMA.
  3. Security Provisioning for NOMA.
  4. Maintaining the sustainability of NOMA with RF wireless power transfer.

Performance enhancement :

- It is possible to improve the performance of NOMA by integrating it with various effective wireless communications techniques, such as cooperative communications, Multiple-Input Multiple-Output (MIMO), beam forming, space-time coding, network coding, etc.

Advantages of NOMA :

- By invoking the SC technique, the BS transmits the superposition coded signals of all users.
- Then, the channel gains of the users are sorted in the increasing or decreasing order.

- In the traditional OMA schemes, strongest user benefits from the highest power, which is not always the case for NOMA.
- The NOMA transmission schemes exhibit the following main advantages :

1. **High bandwidth efficiency :**

- NOMA exhibits a high bandwidth efficiency and hence improves the system's throughput, because it allows multiple users to exploit each resource.

2. **Fairness :**

- An important feature of NOMA is that it allocates more power to the weak users.
- Therefore, NOMA can guarantee an attractive tradeoff between the fairness among users in terms of their throughput.
- NOMA uses sophisticated techniques of maintaining fairness, such as the intelligent PA policies and the cooperative NOMA scheme.

3. **Ultrahigh connectivity :**

- The future 5G system is expected to support the connection of billions of smart devices in the IoT.
- The NOMA can efficiently solve this nontrivial task, with the help of its non-orthogonal characteristics.
- The convectional OMA requires the same number of frequency/time RBs as the number of devices.
- However, NOMA is capable of serving them by using less RBs.
- In short, it offers massive connectivity by serving more uses simultaneously.

4. **Compatibility :**

- Due to the mature status of SC and SIC techniques, NOMA can be compatible with the existing multiple access techniques.
- In fact, it can be invoked as an "add-on" technique for any existing OMA techniques.

5. **Flexibility :**

- With an appropriate integration of coding, modulation, and subcarrier allocation, the NOMA systems can yield a low-complexity, high flexibility design.

6. **Lower latency :**

- NOMA offers lower latency due to simultaneous transmission all the time rather than dedicated scheduled time slot.

7. **Higher QoS :**

- It has a better QoS (Quality of Service) to all the users due to its flexible power control algorithms.
- It helps in increasing cell-edge throughput and better user experience at cell-edges.

8. **Enhanced performance :**

- The NOMA along with MIMO (Multiple Input Multiple Output) delivers an enhanced performance.

Drawbacks of NOMA :

- Following are the disadvantages of NOMA :

1. **Higher complexity and low energy efficiency :**

- Each of the users within the cluster need to decode information of all the other users even one having worst channel gains.
- This leads to complexity in the receiver. Moreover energy consumption is higher.

2. **Erroneous detection :**

- If error occurs in single user due to SIC, decoding of all the other users information will be erroneous.
- This limits maximum number of users.

3. **Limit on active number of users :**

- For the power domain concept in NOMA to work properly at the receiver, there should be an adequate channel gain difference between the users.
- This limits effective number of user pairs served by clusters.

4. Sensitivity to gain information :

- Each user needs to feedback channel gain information back to Base Station.
- Hence, NOMA performance depends on the correctness of this information.

5. Higher security threats :

- Although NOMA technique offers a number of advantages, the enhanced information sensing ability of more users, leads to higher security and privacy threat.

6. Possibility of interference :

- Since the principle of NOMA is to allow multiple users to be superimposed on the same resource, this leads to interference for such systems.

3.4 Characteristics of 5G :

- Some of the important specifications of 5G network are as follows :
  1. Up to 10 Gbps data rate which is 10 to 100 times the speed of 4G and 4.5G networks.
  2. 1-millisecond latency.
  3. 1000 times higher bandwidth per unit area.
  4. Up to 100 fold number of connected devices per unit area as compared with 4G LTE.
  5. 99.999 % availability.
  6. 100 % coverage.
  7. 90 % reduction in network energy usage.
  8. Up to 10-year battery life for low power IoT device.

3.4.1 Advantages of 5G Technology :

- Following are the advantages of 5G :
  1. 5G technology can gather all networks on one platform.
  2. It is more effective and efficient.
  3. 5G technology will provide a huge broadcasting data (in Gigabit), which will support more than 60,000 connections.
  4. 5G is compatible with the previous generations.
  5. It can offer uniform, uninterrupted and consistent connectivity across the world.

3.4.2 Disadvantages of 5G Technology :

- Following are some drawbacks of 5G technology:
  1. 5G technology is still under process and research on its capability is going on.
  2. Claimed speed of this technology seems difficult to achieve because of the incompetent technological support in most parts of the world.
  3. Developing infrastructure of 5G is costly.
  4. Security and privacy issue are yet to be resolved.

3.4.3 Applications of 5G Technology :

- 5G technology can be used in the following applications :
  1. Entertainment and multimedia.
  2. Internet of Things - Connecting everything.
  3. Smart home.
  4. Logistics and shipping.
  5. Smart cities.
  6. Smart farming.
  7. Healthcare and mission critical applications.
  8. Drone operation.
  9. Security and surveillance.

3.5 Recent Trends in Telecommunication Industries :

- Following are the recent trends in the telecommunication industries :

5G deployment :

- Telecommunication industries are actively rolling out 5G networks in order to provide customers with faster and more reliable internet connectivity.

Internet of Things (IoT) expansion :

- The IoT trend is rapidly growing with the increasing number of connected devices.
- Telecom companies trying to take advantage of this trend by providing IoT solutions and services.

Edge computing :

- Edge computing trend brings computing and data storage closer to end-users which reduces latency and allows new use cases, such as real-time data processing for IoT devices.

Focus on cyber security :

- Telecom companies are searching for the cyber security solutions to protect the data of customers.

Emergence of 5G-powered use cases :

- With the installation of 5G networks, various new use cases such as remote surgery, autonomous vehicles, and virtual and augmented reality are emerging.

Network virtualization :

- Network virtualization such as Software-Defined Networking (SDN) and Network Functions Virtualization (NFV) is increasing that allows greater flexibility and quickness in network operations.

Use of AI and automation :

- The operators are using AI and automation for the functions such as network management and optimization, customer service, and fraud detection.

Consolidation of the industry :

- The telecom companies are becoming increasingly consolidated, with large operators getting smaller companies to expand their market reach and provides a wider range of services.

Demand for high speed internet :

- The need for high speed internet access is increasing with the growing demand for online services.
- The telecom industries are investing the new infrastructure to meet high speed internet requirements.

3.6 Comparison of Various Mobile System Generations :

- Table 3.6.1 shows the comparison of various mobile system generations.

Table 3.6.1 : Comparison of various mobile system generations

Sr. No.	Feature	Generation				
		1G	2G	3G	4G	5G
1.	Generation	First	Second	Third	Fourth	Fifth
2.	Year of introduction	1970	1990	2001	2010	2020
3.	Technology	Analog cellular	Digital cellular	Broadband, IP, FDD, TDD	IP-broadband Wi-Fi, MIMO	IPv6
4.	Standard	AMPS	CDMA, TDMA, GSM	CDMA, UMTS, W-CDMA	Wi-Max and LTE	Yet to be finalized
5.	Switching	Circuit	Circuit / Packet	Circuit/Packet	Packet	packet
6.	Frequency band	824-894 MHz	850-1900 MHz	1.6-2.5 GHz	2-8 GHz	15 GHz
7.	Data speed	2.4 kbps	9.6 kbps	2 Mbps	50 Mbps	Higher than 1Gbps

Sr. No.	Feature	Generation				
		1G	2G	3G	4G	5G
8.	Multiplexing	FDMA	CDMA, TDMA	CDMA	MC-CDMA OFDM	MC-CDMA, LAS-CDMA, OFDM
9.	Core network	PSTN	PSTN	Packet Network	Internet	Internet
10.	Services	Only voice or only message	Digital voice, Data, SMS	High speed data, Voice, Video	Dynamic Information Access.	Interactive multimedia, Voice over IP

Review Questions

Q. 1 Discuss the requirements of 5G.

Q. 2 Draw and explain open wireless architecture of 5G.

Q. 3 Write a short note on : The fifth generation of wireless communication.

Q. 4 State the features of 5G.

Q. 5 State the specifications of 5G.

Q. 6 What are the expectations in 5G network.

Q. 7 Differentiate between 4G and 5G.

Q. 8 Draw the functional architecture of 5G.

Q. 9 Write a short note on : 5G enabled technologies.

Q. 10 Write a short note on : Small cell concept.

Q. 11 Write a short note on : Massive MIMO.

Q. 12 Explain the concept millimeter waves.

Q. 13 Write a short note on : NOMA.

Q. 14 State the advantages and disadvantages of 5G technology.

Q. 15 State the applications of 5G technology.

Q. 16 Write a short note on : Recent trends in telecommunication industries.

Q. 17 Compare the five generations of wireless communication.

□□□