CSS 423 - Internet of Things: Experiment-2

Name: Lokesh Kumar
Roll number: 2022BCS0174
Batch: 3

Temperature Alert System

Objective

Create a temperature alert system using TMP36 sensor for the maintenance of an ideal temperature (25 degrees) in a greenhouse. Interface it with an LCD to display the temperature, Red LED to show temperature above the limit and Green LED to show temperature below the limit. Also beep a buzzer if the temperature is above the limit.

Components

- Arduino UNO
- Breadboard
- TMP36 Temperature Sensor
- 16×2 LCD Display
- Potentiometer (10kΩ)
- Red LED
- Green LED
- Buzzer (Passive / Piezo)

- Resistors (220Ω)
- Connecting Wires

Theory

In this project, a temperature alert system is designed to monitor the temperature and give an alert if it exceeds a safe limit.

The TMP36 temperature sensor measures the surrounding temperature and gives an analog voltage output proportional to temperature. This voltage is read by the Arduino UNO through its analog input pin.

The Arduino converts this voltage into temperature in degrees Celsius. The temperature value is displayed on a 16×2 LCD.

- If the temperature is greater than 25°C:
  - The red LED turns ON
  - The green LED turns OFF
  - The buzzer beeps as a warning
- If the temperature is 25°C or below:
  - The green LED turns ON
  - The red LED turns OFF
  - The buzzer remains OFF

Thus, the system helps in maintaining a safe temperature.

Circuit Diagram

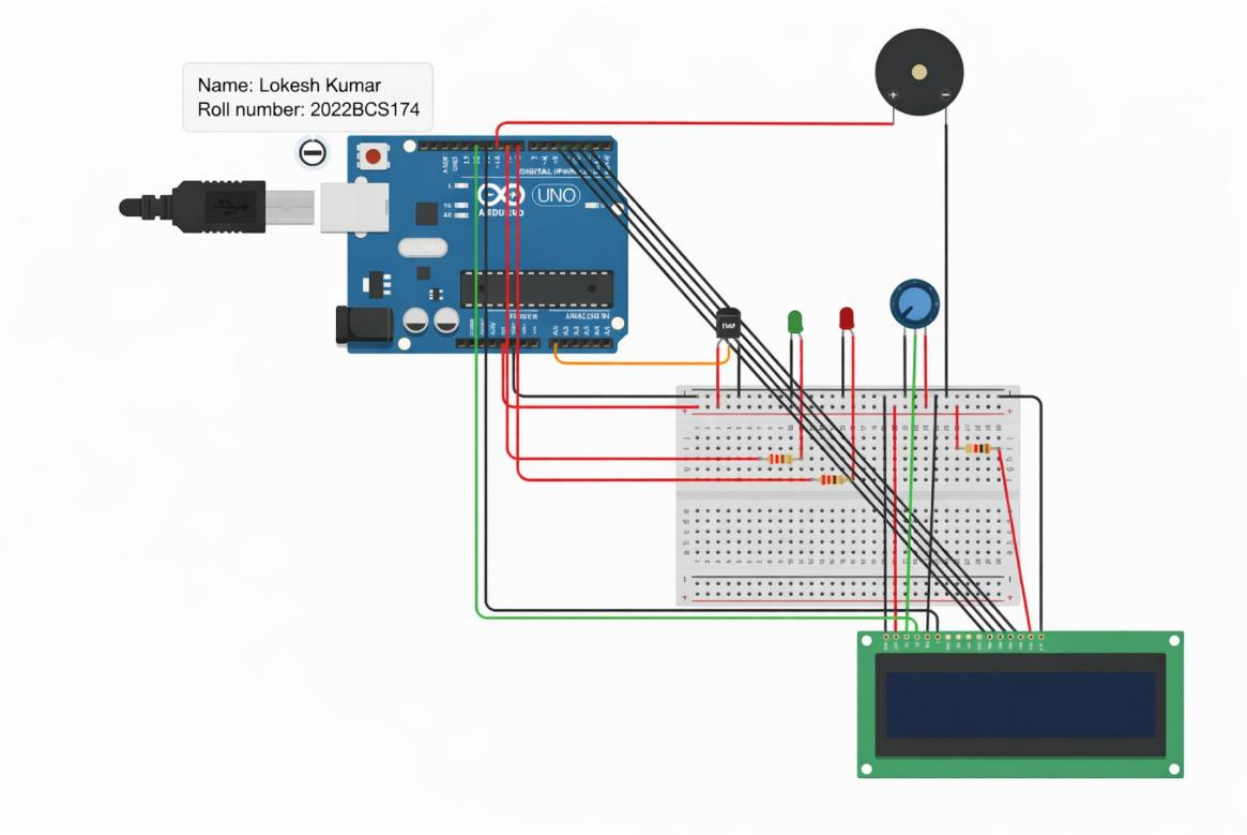

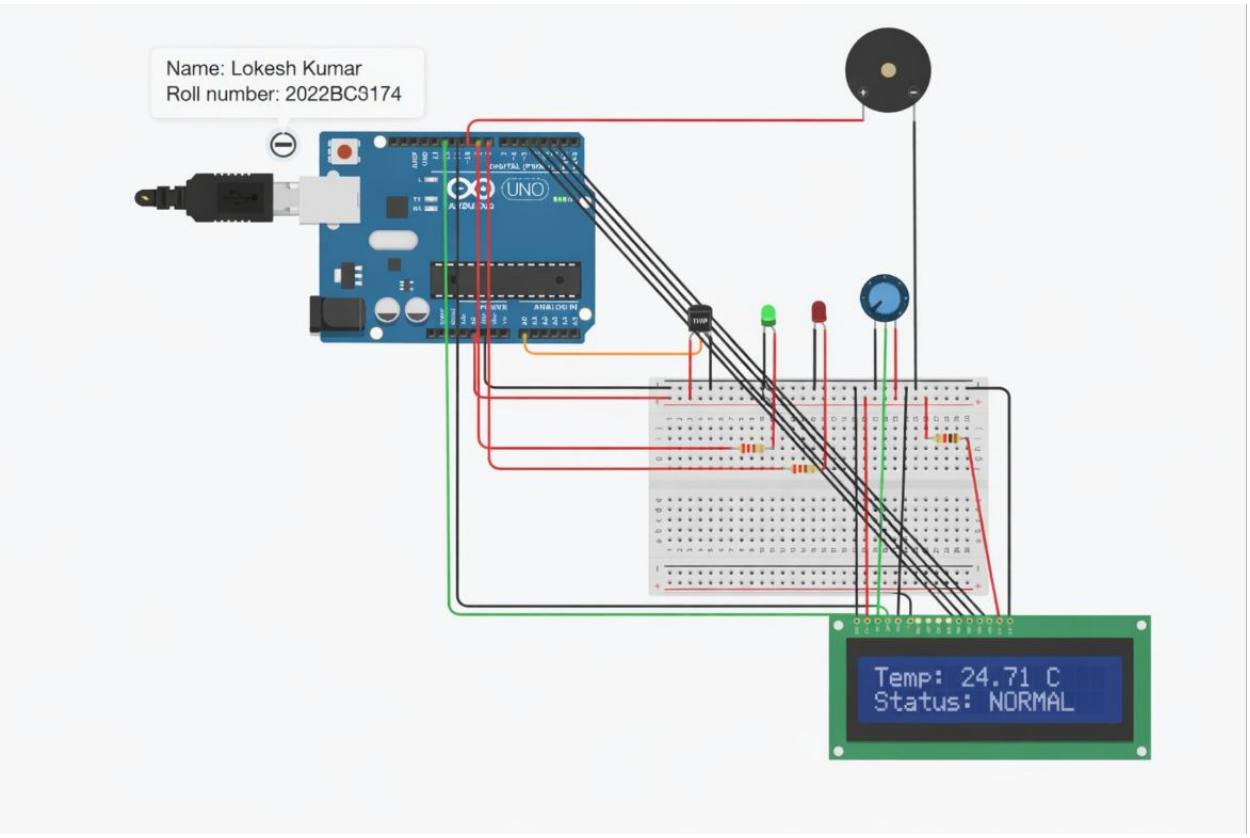
Name: Lokesh Kumar
Roll number: 2022BC3174
UNO
Temp: 24.71 C
Status: NORMAL

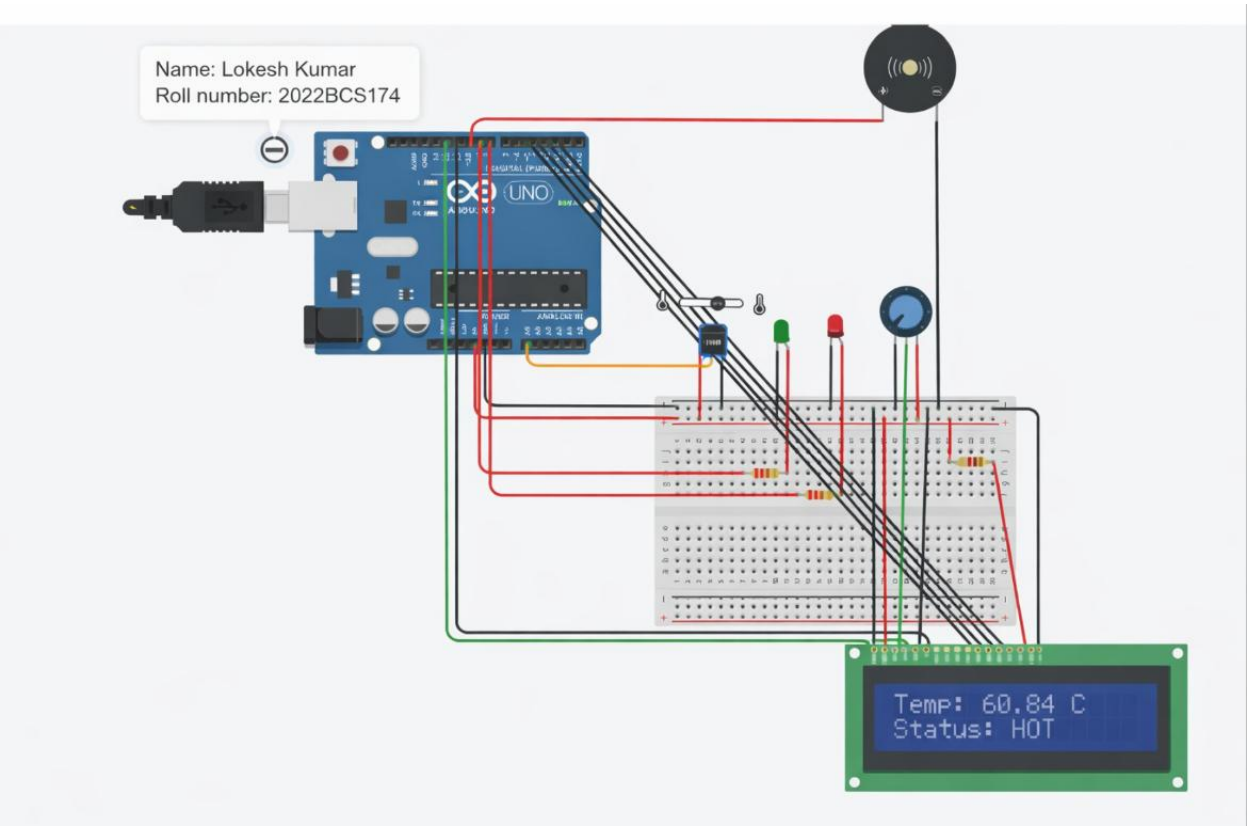

crosses the limit.

- All components are powered using the 5V and GND pins of the Arduino.

Code

```
#include <LiquidCrystal.h>

LiquidCrystal lcd(12, 11, 5, 4, 3, 2);
```

```
const int tempPin = A0; const
int greenLED = 9; const int
redLED = 8; const int buzzer =
10;

void setup()
{
  Serial.begin(9600);   lcd.begin(16, 2);

  pinMode(greenLED, OUTPUT);   pinMode(redLED,
OUTPUT);   pinMode(buzzer, OUTPUT);
}

void loop()
{   int c = analogRead(tempPin);
float voltage = c * 5.0 / 1024.0;
  float temperatureC = (voltage - 0.5) * 100;

  lcd.setCursor(0, 0);   lcd.print("Temp: ");
lcd.print(temperatureC);
  lcd.print(" C   ");

  Serial.print("Temp: ");
  Serial.print(temperatureC);
  Serial.print(" C   ");   lcd.setCursor(0, 1);

  if (temperatureC > 25)
  {
    lcd.print("Status: HOT    ");
```

```
    Serial.println("Status: HOT     ");

    digitalWrite(redLED, HIGH);
    digitalWrite(greenLED, LOW);

    tone(buzzer, 1000);
    delay(200);
    noTone(buzzer);
    delay(200);
  }
  else
  {
    lcd.print("Status: NORMAL ");
    Serial.println("Status: NORMAL ");

    digitalWrite(redLED, LOW);
    digitalWrite(greenLED, HIGH);

    noTone(buzzer);
    delay(1000);
  }
}
```

Results

- The LCD successfully displays the temperature in degrees Celsius.
- When the temperature is below or equal to 25°C
  - Green LED glows
  - Red LED remains OFF
  - Buzzer does not sound
- When the temperature is above 25°C
  - Red LED glows
  - Green LED turns OFF
  - Buzzer produces a beeping sound

The system responds correctly to changes in temperature.

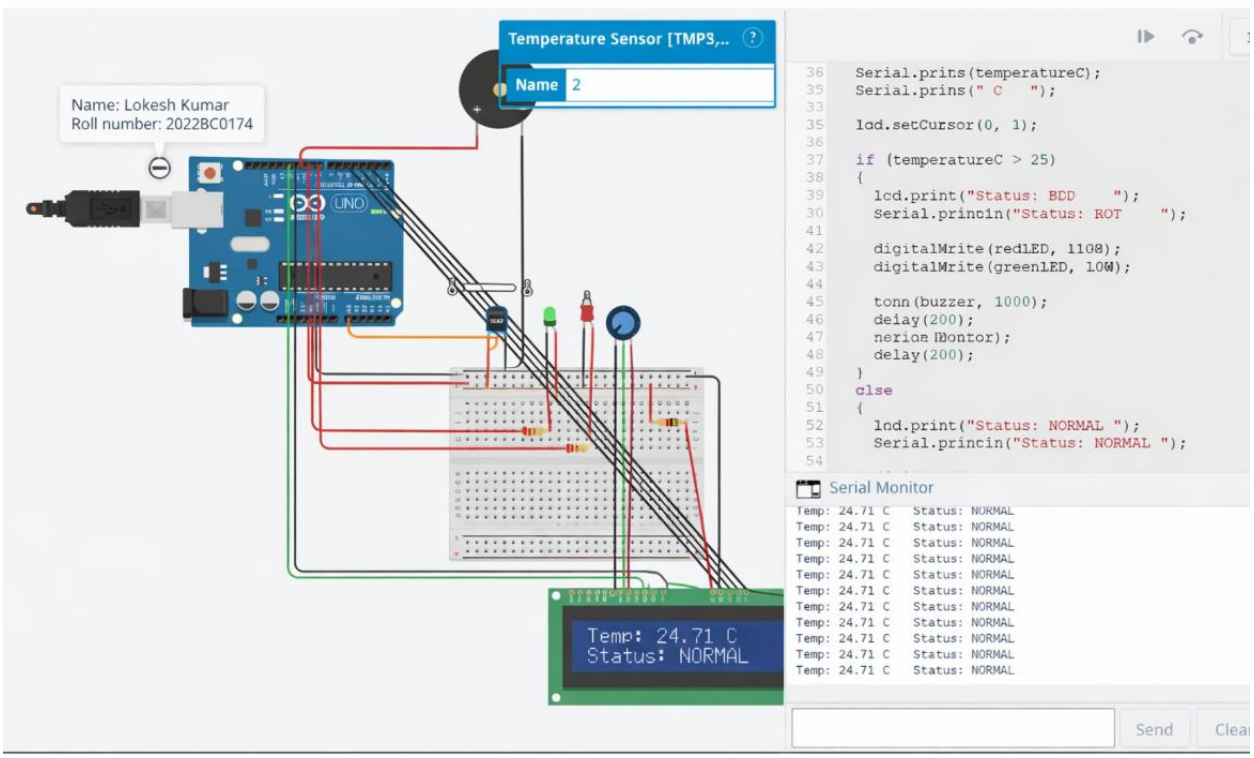

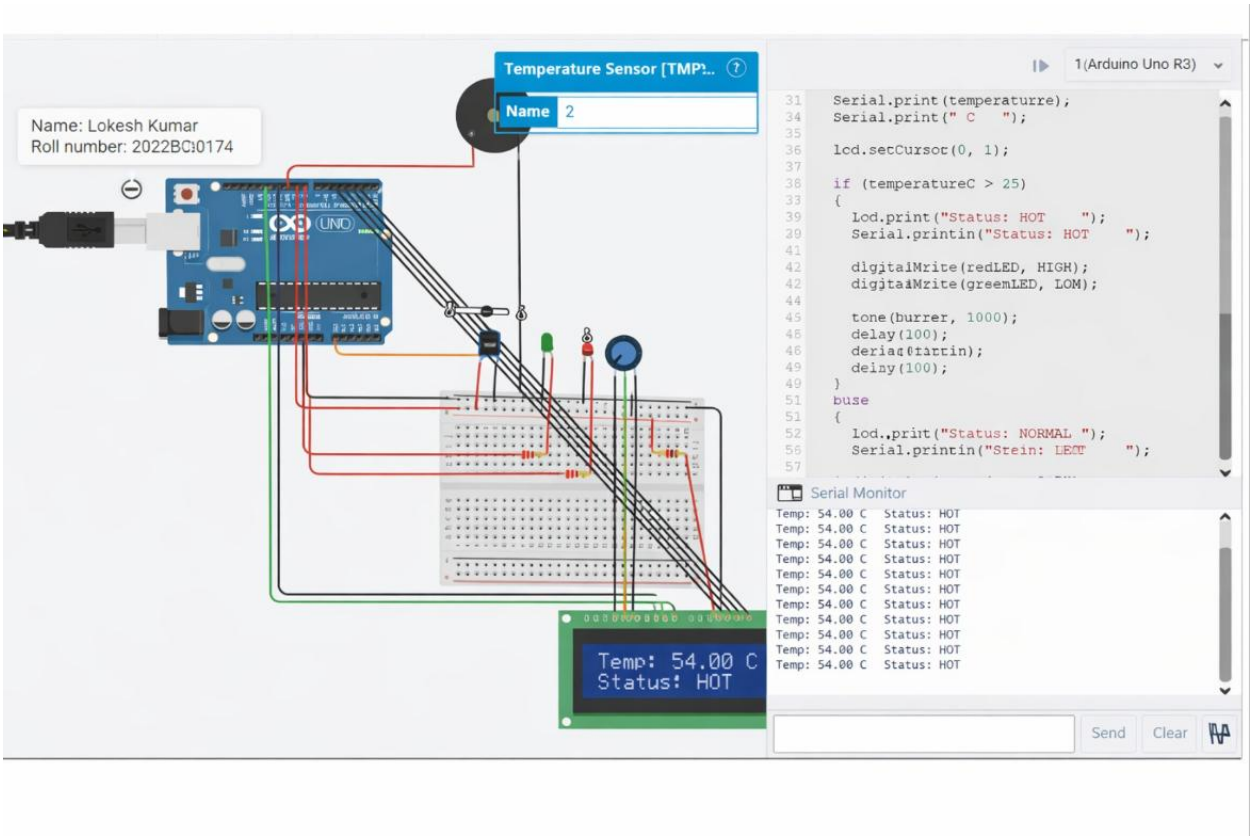

Inference

The temperature alert system works successfully as designed.

It accurately measures temperature, displays it on the LCD, and provides visual and audible alerts when the temperature exceeds the preset limit.

This system can be effectively used in greenhouses, storage rooms, and temperature-sensitive environments to ensure safety and proper control.