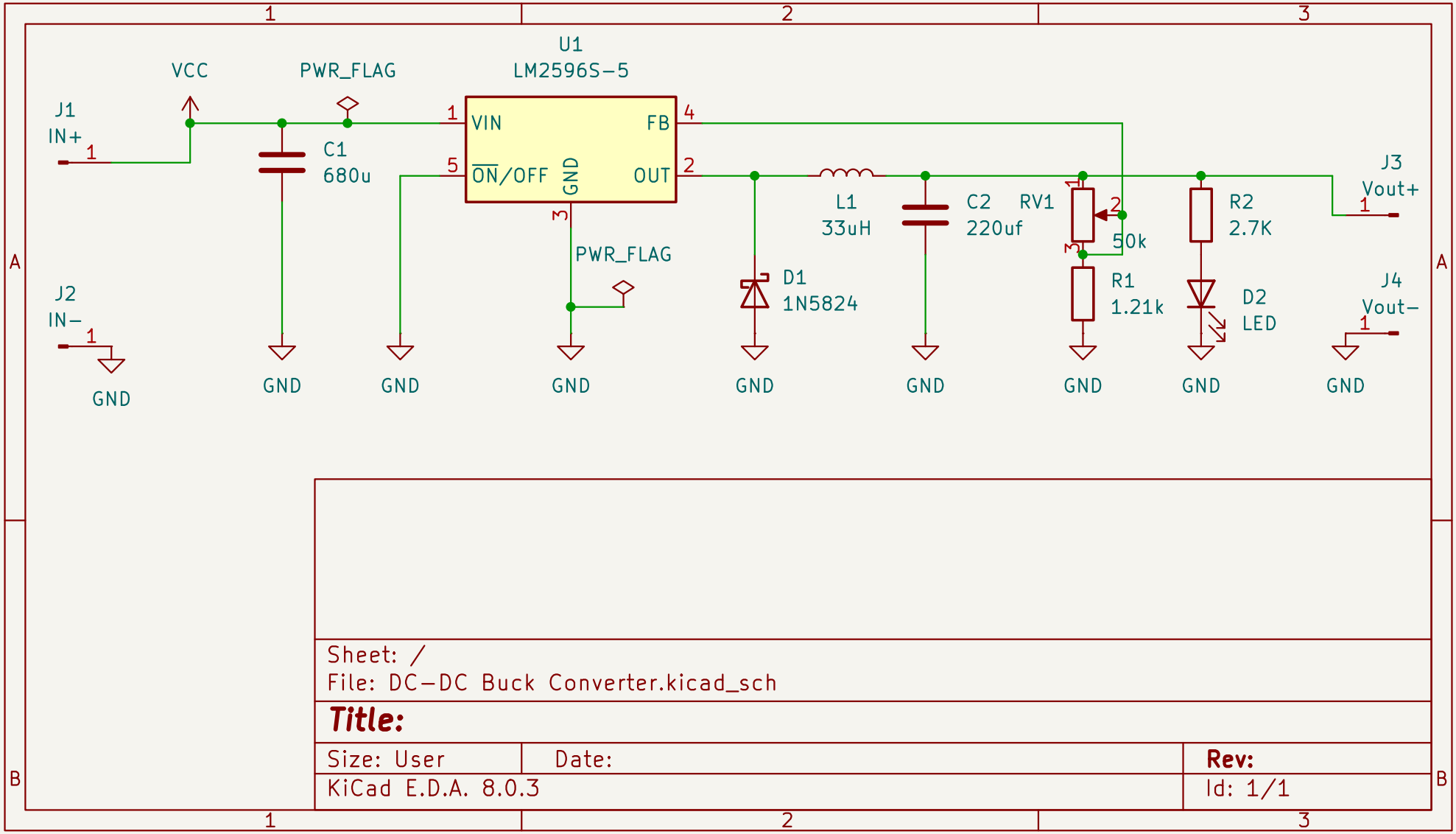
U1
LM2596S-5
VIN
FB
ON/OFF
GND
OUT
VCC
PWR_FLAG
J1
IN+
J2
IN-
C1
680u
L1
33uH
C2
220uf
RV1
50k
R1
1.21k
R2
2.7K
D1
1N5824
D2
LED
J3
Vout+
J4
Vout-
GND
Sheet: /
File: DC-DC Buck Converter.kicad_sch
Title:
Size: User
Date:
Rev:
KiCad E.D.A. 8.0.3
Id: 1/1