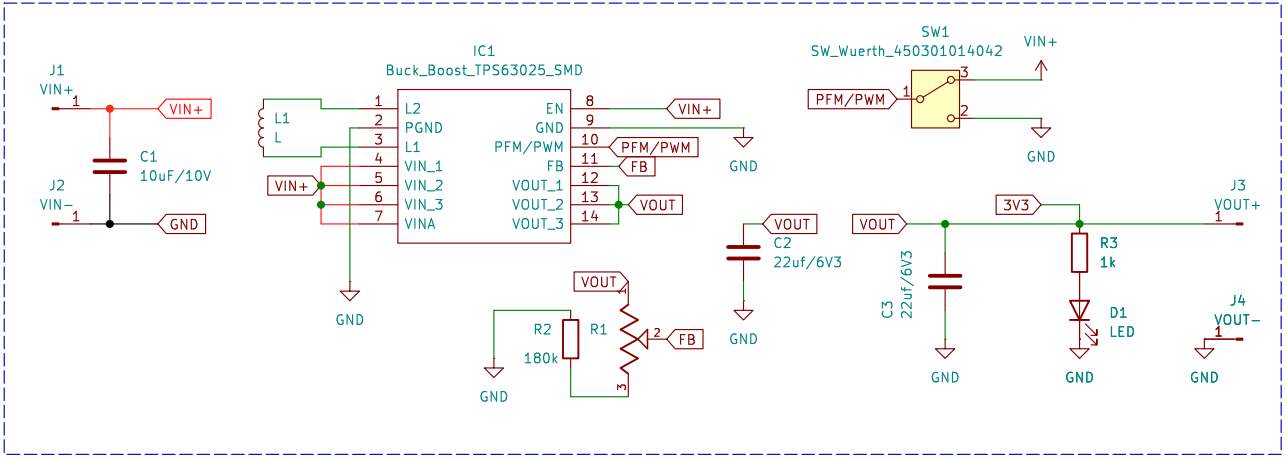

3V3 BUCK BOOST CONVERTER

Sheet: /		
File: 3.3V Buck Boost Converter.kicad_sch		
Title:		
Size: User	Date:	**Rev:**
KiCad E.D.A. 8.0.3		Id: 1/1