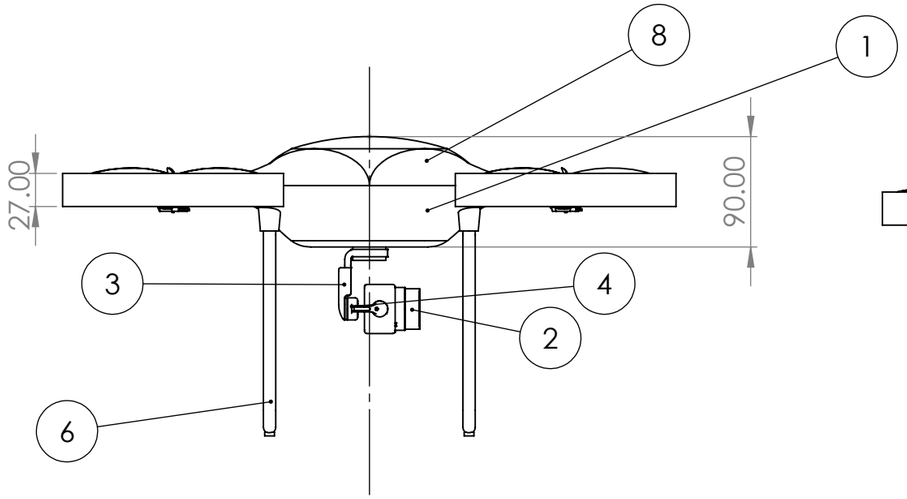


**Front View**

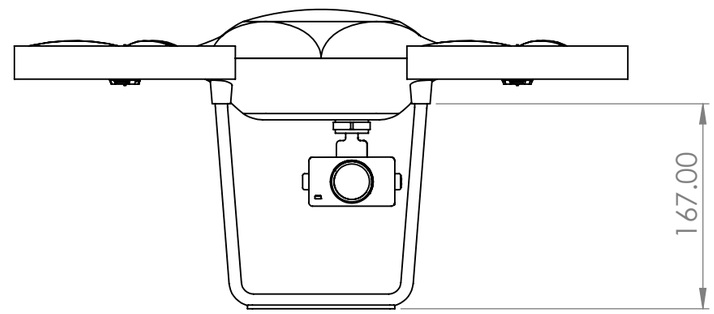


**Side View**

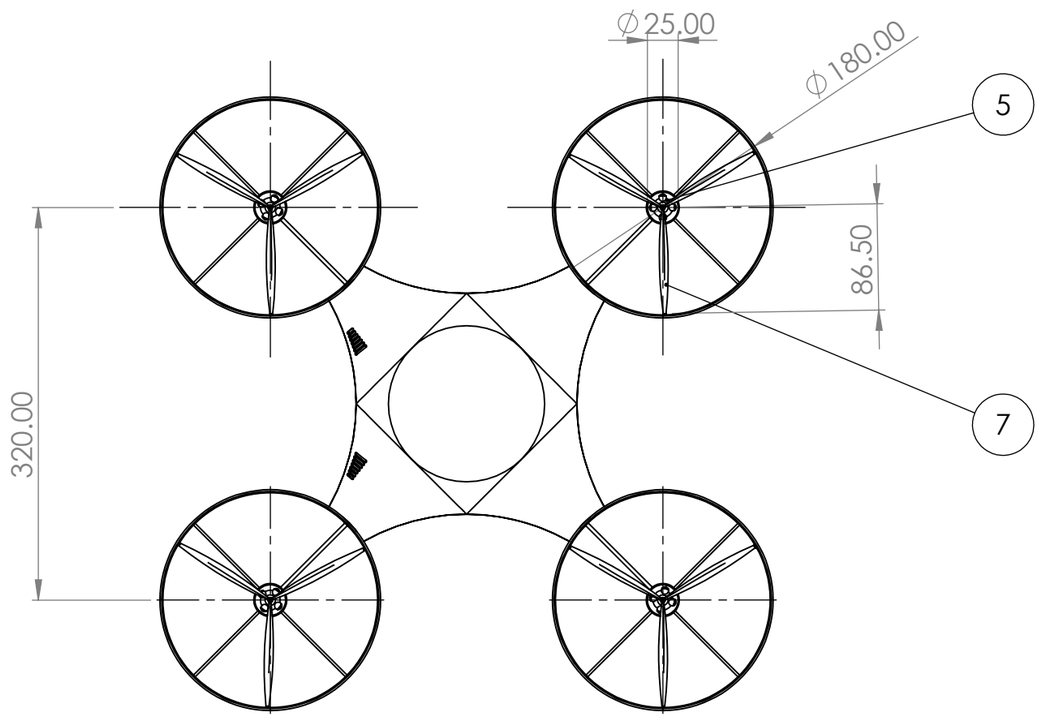


**Top View**

| ITEM NO. | PART NUMBER | DESCRIPTION | QTY. |
|---|---|---|---|
| 1 | Bottom Base | Tough Plastic | 1 |
| 2 | Camera | For Footage | 1 |
| 3 | Camera holder | M.S. | 1 |
| 4 | Camera stand | M.S. | 1 |
| 5 | DC Motor | Electric Component | 4 |
| 6 | Landing Base | Metal | 2 |
| 7 | Propeller | High RPM Plastic | 4 |
| 8 | Upper Cover | Tough Plastic | 1 |

**ALL DIMENSIONS ARE IN MM**

UNLESS OTHERWISE SPECIFIED:
DIMENSIONS ARE IN MILLIMETERS
SURFACE FINISH:
TOLERANCES:
LINEAR:
ANGULAR:

FINISH:

DEBURR AND BREAK SHARP EDGES

DO NOT SCALE DRAWING

REVISION

| | NAME | SIGNATURE | DATE |
|---|---|---|---|
| DRAWN | | | |
| CHK'D | | | |
| APPV'D | | | |
| MFG | | | |
| Q.A | | | |

TITLE:

MATERIAL:

WEIGHT:

DWG NO.

Drone Assembly Drawing

A3

SCALE:1:5

SHEET 1 OF 1