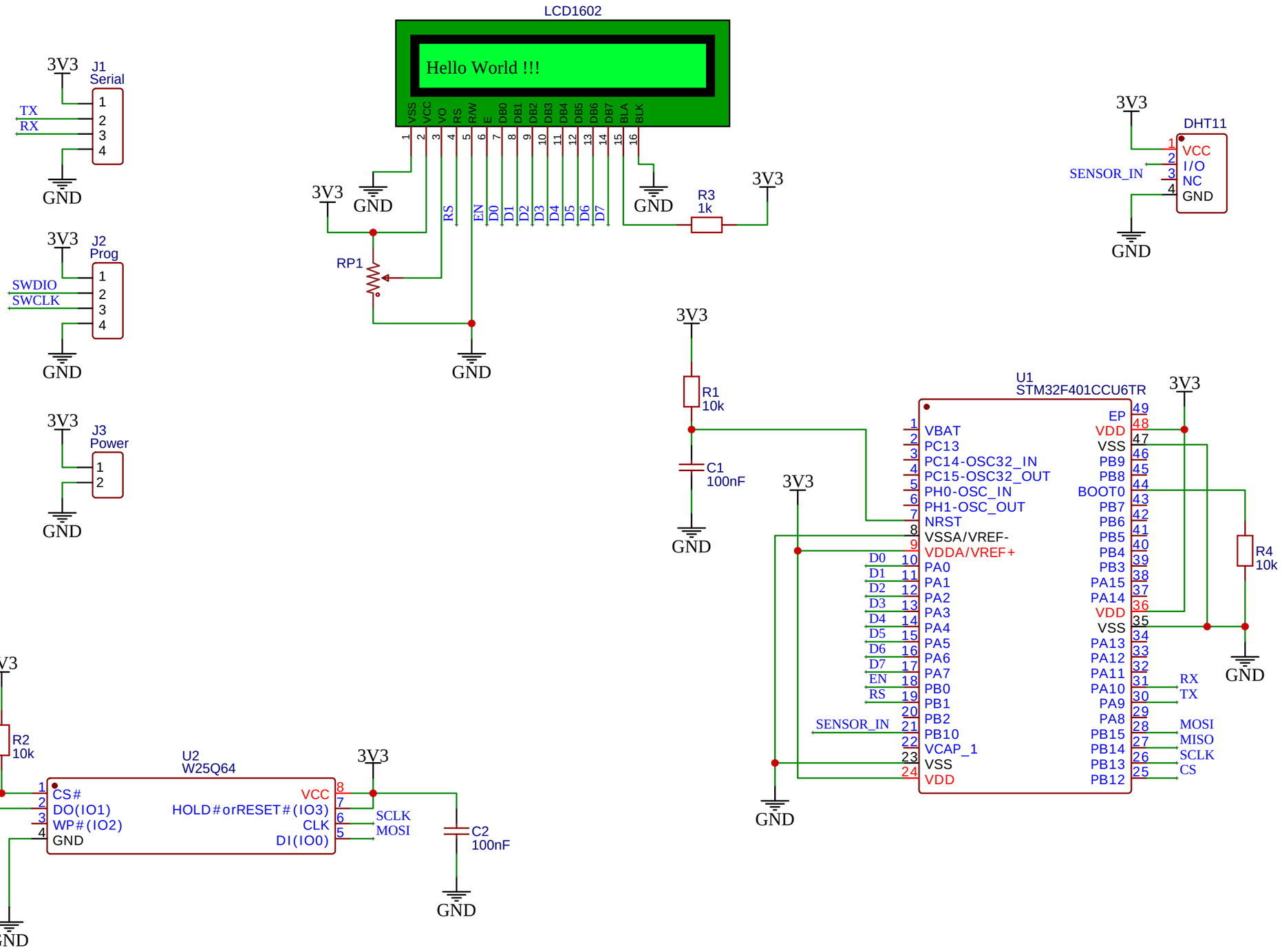

TITLE: Process Indicator		REV: 1.0
EasyEDA	Company:	Sheet: 1/1
	Date: 2024-01-01 Drawn By: Rajeev Kumar	