BASICS OF CIVIL ENGINEERING

B.E. FIRST SEMESTER

PROF. RASHMI BADE

BESI-5T	Basics of Civil Engineering

Course Outcomes: At the end of the course, the student will have:

Cos	Description	Bloom's Taxonomy
CO1	**DEFINE** and discuss the general concepts related to building, its component and various building materials.	
CO2	**DISCOVER** the knowledge of survey and various modes of transportation.	
CO3	**DISCUSS** the importance of Environment.	
CO4	**ITENTIFY** natural resources and explain water resource engineering.	
CO5	**DISCUSS** the knowledge of various instruments in Civil Engineering Structures and sustainable development.	

PROF. RASHMI BADE

Basics of Civil Engineering (BESI-5T)
Total Credits: 03

Teaching Scheme	**Examination Scheme**
Lectures: 2 Hours/Week	**Theory**
Tutorial: 1 Hour/Week	**T (U) :** 40 Marks **T (I) :** 10 Marks
	Duration of University Exam. : 02 Hours

Unit –I: (10 Hrs)

Introduction to Civil Engineering

Introduction and scope of Civil Engineering. Role of Engineers in the infrastructure development.

General concepts related to building.

Selection of site, basic functions of buildings, types of buildings – Residential, Public, Commercial, and Industrial.

Principles of planning, orientation of buildings, introduction to bye-laws regarding building line, Height of building, open space requirement, F.S.I., Carpet area, built up area, setbacks, ventilation.

Components of Buildings

Introduction to Types of loads on buildings.

Substructure – Types of soils; rocks and foundation strata, concept of bearing capacity, Types of foundation and their suitability.

Superstructure –Types of construction: Load Bearing, Framed, and Composite.

Building Materials

Introduction to basic construction materials; cement, bricks, stone, aggregates, reinforcing steel, structural glazing, structural steel; Concrete types: PCC, RCC, Prestressed, Precast and Ready Mix Concrete.

Use of various eco- friendly materials in construction.

Unit – II: (10 Hrs)

Surveying

Various types of maps and their uses; Introduction to digital mapping; Principles of survey. Introduction to various survey instruments such as EDM, Lasers, Total Station, and digital planimeter. Modern survey methods. Introduction to GIS, GPS and their applications.

Transportation Engineering

Role of transportation in national development; various modes of Transportation. Classification of Highways: Expressways, NH, SH, MDR, ODR, VR; Types of Pavements, Traffic Signs, signals, Parking system, and Causes of Accidents.

Unit –III: (10 Hrs)

Environment and Natural Resource Management

Water supply - Sources, drinking water requirements, impurities in water and their effects; Purification of water, modern purification processes; Standards of purified water. Waste Management: Collection and Disposal methods of Liquid, solid and gaseous wastes.

PROF. RASHMI BADE

Water Resources Engineering

Introduction to Hydraulic structures of storage; water conveyance systems; Watershed management: Definition, Necessity and methods; Roof top rain water harvesting and Ground water recharge: relevance and methods.

Unit –IV: (10 Hrs)

Instrumentation in Civil Engineering Structures:

Various Instruments used in construction, water resources, Environmental Engineering, Foundation Engineering, Thermocouples, condition monitoring equipments, Half Cell Potentiometers, Strain Gauges. Management of Utilities using telemetry & SCADA System.

Sustainable Development:

Role of Engineers in Sustainable Development. Concept of green buildings and LEED Certification.

[Note: Minimum 4 Assignments based on the Syllabus**]**

Books Recommended:

1. Elements of Civil Engineering: By S. S. Bhavikatti
2. Basic Civil Engineering: By Dr. B. C. Punmia, Ashok Kumar Jain, Arun Kumar Jain.
3. Concrete Technology: By M.S.Shetty
4. Surveying And Levelling: By Kanetkar and Kulkarni
5. Irrigation And Hydraulic Structures: By S.K.Garg
6. Water Supply And Sanitary Engineering: Including Environmental Engineering, Water And Air Pollution Laws And Ecology: By G. S. Birdie, J. S. Birdie
7. Building Construction: By Sushil Kumar
8. Transportation Engineering: By Khanna & Justo
9. Building Drawing Design: By Shah and Kale
10. Construction Planning, Equipments And Methods: Robert Peurifoy, Clifford J. Schexnayder, Aviad Shapira and Robert Schmitt.

PROF. RASHMI BADE

INTRODUCTION SCOPE OF CIVIL ENGINEERING

INTRODUCTION

Civil Engineering is the oldest branch of engineering which is growing right from the stone-age civilization. American Society of Civil Engineering defines *civil engineering as the profession in which knowledge of the mathematical and physical sciences gained by study, experience and practice is applied with judgement to develop ways to utilize economically the materials and forces of the nature for the progressive well-being of man.*

In this chapter various civil engineering infrastructure projects for 21st century are listed and the role of civil engineer is presented. Apart from civil engineering there are other infrastructural facilities required by the public which need coordination with other engineers. Importance of this interdisciplinary approach in engineering is also presented in this chapter.

SCOPE OF CIVIL ENGINEERING

The world has realised that a government should not involve itself in production and distribution but develop infrastructure to create an atmosphere for economical development. Civil Engineering activities in the infrastructure development are as under:

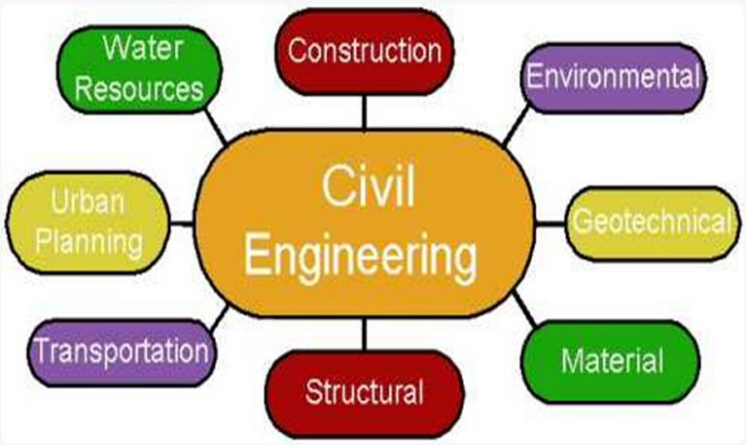

1. A good planning of towns and extension areas in the cities is required.
2. Fast rate of urbanization and increase in the cost of land has forced civil engineers to go for vertical growth in cities..
3. Water is an important need for all living beings. Civil engineers have to exploit various water resources and ensure water supply to urban areas throughout the year.
4. Another important amenity that public require is good roads. Design of appropriate base course thickness, finishing surfaces, cross drainage, design of horizontal and vertical curves are the duties of civil engineers. Proper design of intersection of roads is necessary.
5. Other important infrastructural activities of civil engineering are controlling air pollution, noise pollution and land pollution.

Scope of different fields of civil engineering may be distributed into following ways: -

1. ***Surveying: -*** It is the science of map making To start any development activity in an area relative positions of various objects in horizontal and vertical direction is required which is approved by surveying.

2. ***Building Materials: -*** Shelter is the basic need of civilization. To get good shelter, continuous efforts are going on right from the beginning of civilization. Stones, bricks, timber, lime, cement, sand, jellies and tiles are traditional building materials. Use of steel, aluminium, glass, glazed tiles, plaster of Paris, paints and varnishes have improved the quality of building.

3. ***Construction Technology: -*** Construction is the major activity of civil engineering which is continuously improving. As land cost is going up, there is demand for tall structures in urban areas while in rural areas need is low cost construction

PROF. RASHMI BADE

4. ***Structural Engineering: -*** Load acting on a structure is ultimately transferred to ground. In doing so, various components of the structure are subjected to internal stresses. Analysis and finding the suitable size of the structural component is known as structural design of structure.

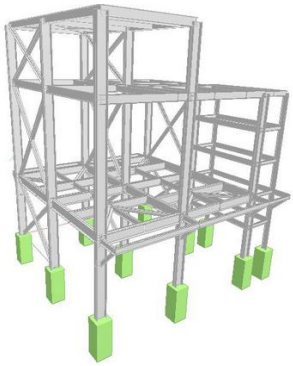

5. ***Geotechnical Engineering: -*** Soil property changes from place to place. Even in the same place it may not be uniform at various depths. The soil property may vary from season to season due to variation in moisture content. The study of soil strata and its different properties is called geotechnical engineering.

6. ***Hydraulics: -*** Water is an important need for all living beings. Study of mechanics of fluid and its flow characteristics is another important field in Civil Engineering and it is known as hydraulics.

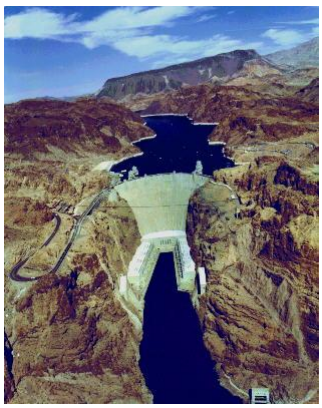

PROF. RASHMI BADE

7. ***Water resources and Irrigation: -*** Water is essential to our lives. Water is to be supplied to agriculture field and for drinking purposes. Hence, suitable water resources are to be identified and water is to be stored. Identifying, planning and building water retaining structures like tanks and dams maintain electric power facilities, canals, pipelines etc. is known as water resources and irrigation engineering.

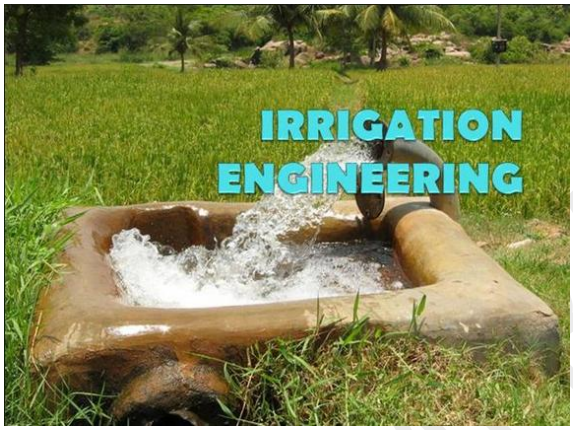

8. ***Transportation Engineering: -*** Transportation facility is another important need. Providing good and economical roads is an important duty of civil engineers. It involves design of base courses, suitable surface finishes, cross drainage works, road intersections, culverts, bridges, tunnels, etc. Railway is another important long-way transport facility. Carrying out traffic survey, construction and maintenance of roads, bridges, railway, harbor and airports is known as transportation Engineering.

9. ***Environmental Engineering: -*** Proper distribution of water to rural areas, towns and cities and disposal of waste water and solid waste are another field of civil engineering. Environmental engineering while tackling all problems of pollution provides healthy environment to public.

PROF. RASHMI BADE

ROLE OF ENGINEERS IN THE INFRASTRUCTURE DEVELOPMENT

A civil engineer has to conceive, plan, estimate, get approval, create and maintain all civil engineering infrastructure activities. Civil engineer has a very important role in the development of the following infrastructures:

1. Measure and map the earth's surface.
2. Plan and develop extensions of towns and cities.
3. Build the suitable structures for the rural and urban areas for various utilities.
4. Build the tanks and dams to exploit water resources.
5. Build river navigation and flood control projects.
6. Build canals and distributories to take water to agricultural fields.
7. Purify and supply water to needy areas like houses, schools, offices etc.
8. Provide and maintain communication systems like roads, railways, harbors and airports.
9. Devise systems for control and efficient flow of traffic.
10. Provide, build and maintain drainage and waste water disposal system.
11. Monitor land, water and air pollution, and take measures to control them. Fast growing industrialization has put heavy responsibilities on civil engineers to preserve and protect environment.

GENERAL CONCEPTS RELATED TO BUILDING

SELECTION OF SITE

The selection of a site for affordable housing should reflect the particular needs of the population that your housing development will serve. An important consideration is the location of the property in relation to the services residents will need to access, such as shopping, medical, schools and transportation. Location of the site may also have a significant impact on the cost of your project. The shape, slope and soil conditions of a piece of property will all have an impact on the practicality of development. The availability of services to a site is another important consideration, as it is expensive to bring or upgrade water, sewer, power and other utilities, as well as roads and sidewalks, to a piece of property.

Proper selection of site is essential for optimum functional and economical planning. Site should be so selected that it satisfies the following criteria to greater extent.

1. Site should serve the intended purposes.
2. Site should be uniform in geometrical shape since with irregular shape land is wasted.
3. It should have enough space to cater for the project and future requirements.
4. To reduce constructional cost, hard and firm strata should be available at a shallow depth.
5. Site should be safe and in well secured locality.
6. Site near nalla or river should be avoided.
7. It should be free from pollution due to dust noise, insanitary conditions.

PROF. RASHMI BADE

BASIC FUNCTION OF BUILDING

There are many factors which must be taken in to account while selecting a site for a commercial and residential buildings. Some of these factors are given below.

1. ***Comfort and convenience:*** **-** A building should be provided with enough light during day or night in such manner to get maximum benefit of natural air or light.
2. ***Dimensional Stability:*** **-** It should be elastic and plastic deformation.
3. ***Durability:*** **-** Period upto which building remains habitable is called its durability.
4. ***Economy:*** **-** At every stage of functional planning, designing, construction, maintenance and operation of building, economics aspect should be considered.
5. ***Fire protection:*** - To protect the building against fire.
6. ***Light and ventilation:*** - In every building positions, number of doors and windows should be in such a way to get maximum light.
7. ***Moisture and damp prevention:*** - One of the basic requirements in case of all buildings is that structure should remain dry as far ad possible.
8. ***Sound insulation:*** - It is necessary to give attention to the sound insulation of building because of various factors such as increase in population, change in habits.
9. ***Strength and stability:*** - It is the major requirement of a building for safety of common man.

TYPES OF BUILDING

Building is defined in many aspects as: As a Civil Engineering structures such as a house, worship centre, Factories etc. that has a foundation, wall, roof etc. that protect human being and their properties from direct harsh effect of weather like rain, wind, sun etc.

I) RESIDENTIAL BUILDING:- Residential buildings are called houses/homes, though buildings containing large numbers of separate dwelling units are often called apartment buildings or apartment blocks to differentiate them from the more 'individual' house.

Building types may range from one-room wood-framed, masonry, or adobe dwellings to multi-million dollar high-rise buildings able to house thousands of people. Increasing settlement density in buildings (and closer distances between buildings) is usually a response to high ground prices resulting from many people wanting to live close to work or similar attractors.

II) PUBLIC BUILDING:- (i) "public building" means any building-

(a) used as a-

(i) school (including a tutorial school) or college (including a tutorial college) or University or other educational institution;

(ii) hostel;

(iii) library;

(iv) hospital, nursing home, dispensary, clinic or maternity centre;

(v) club;

(vi) lodging house, boarding house or hotel; or

(vii) choultry;

(b) ordinarily used for public meetings or for celebrating marriage functions

III) COMMERCIAL BUILDING:- A **commercial building** is a building that is used for commercial use.[1] Types can include office buildings, warehouses, or retail (i.e. convenience stores, 'big box' stores, shopping malls, etc.). In urban locations, a commercial building often combines functions, such as an office on levels 2-10, with retail on floor 1. Local authorities commonly maintain strict regulations on commercial zoning, and have the authority to designate any zoned area as such. A business must be located in a commercial area or area zoned at least partially for commerce.

IV) INDUSTERIAL BUILDING:- An **industrial building**, is a building used for industrial activities.

Types of industrial buildings:-

- Brewery
- Factory
- Foundry
- Mining
- Power plant
- Refinery
- Mill
- Oil Rig.

V) INSTITUTIONAL BUILDINGS

These buildings are used for different purposes, such as medical or other treatment or care of persons suffering from physical or mental illness, diseases or infirmity, care of infants, convalescents or aged persons and for penal detention in which the liberty of the inmates is restricted. Institutional buildings ordinarily provide sleeping accommodation for the occupants.

VI) ASSEMBLY BUILDINGS

These are the buildings where groups of people meet or gather for amusement, recreation, social, religious, assembly halls, city halls, marriage halls, exhibition halls, museums, places of work ship, etc.

VII) BUSINESS BUILDINGS

These buildings are used for transaction of business, for keeping of accounts and records and for similar purposes, offices, banks, professional establishments, courts houses, libraries. The principal function of these buildings is transaction of public business and keeping of books and records.

VIII) MERCANTILE BUILDINGS

These buildings are used as shops, stores, market, for display an sale of merchandise either wholesale or retail, office, shops, storage service facilities incidental to the sale of merchandise and located in the same building.

IX) STORAGE BUILDINGS

These buildings are used primarily for the storage or sheltering of goods, wares or merchandise vehicles and animals, as warehouses, cold storage, garages, trucks.

X) HAZARDOUS BUILDINGS

These buildings are used for the storage, handling, manufacture or processing of highly combustible or explosive materials or products which are liable to burn with extreme rapidly and/or which may produce poisonous elements for storage handling, acids or other liquids or chemicals producing flames, fumes and ex plosive, poisonous, irritant or corrosive gases processing of any material producing explosive mixtures of dust which result in the division of matter into fine particles subjected to spontaneous ignition.

PRINCIPAL OF PLANNING

A building must be planned on paper and on the architect drawing before construction of that building is undertaken. Residential building such as bungalows, farmhouse, flat system, apartments, township and public building such as post office, banks, hostels, cinema theaters, and railway station require rigorous planning before construction activity is undertaken. The planning process some basic principles are involved which are known as Principle of planning.

The principle discussed here applies to both public as well as residential building. The principle ensures proper and economical utilization of space and other resources require for building. Principles are as follows:-

1. **Aspect: -** It is defined as the positioning of windows and doors in external walls to take maximum advantage of natural gifts such as sunlight, wind or breeze.

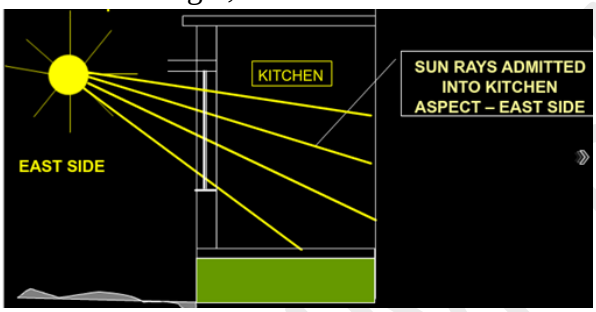

2. **Prospect: -** Prospect means taking advantage of desirable view available from windows, doors and balconies, of features outside the building such as garden, lake, sea etc.

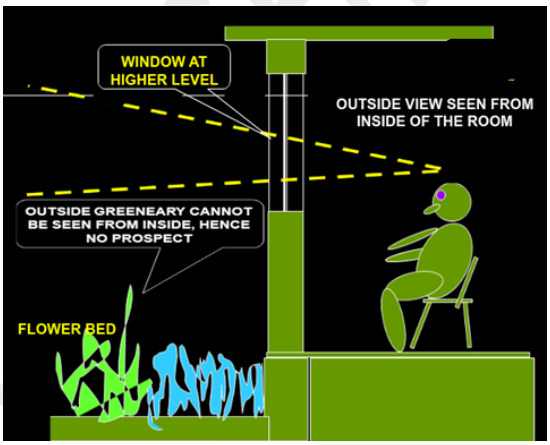

3. **Orientation: -** Orientation means placement of rooms with reference to the north direction.

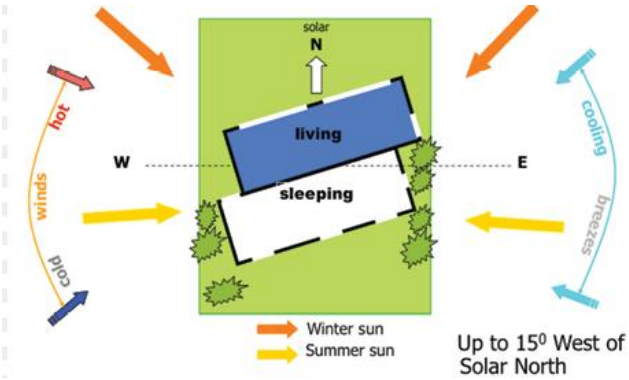

4. **Privacy:-** Means the entire building from the surrounding building. Privacy from noise and pollution from the road, also privacy from congestion due to crowding of building.

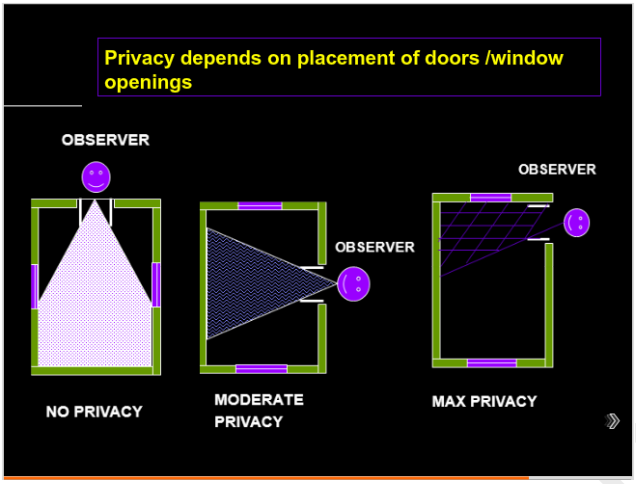

5. **Circulation:-** Circulation refers to movement from one place to another inside the building.

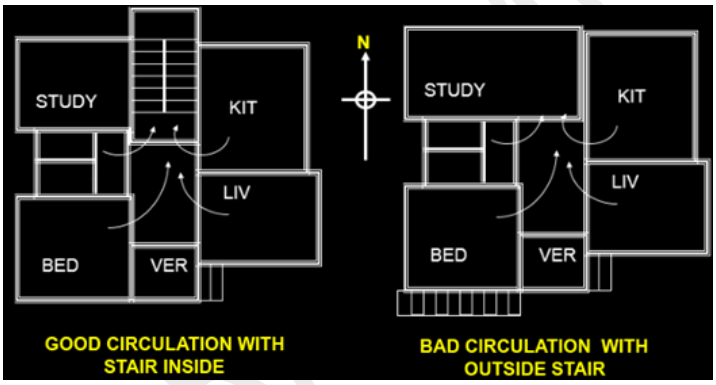

6. **Furniture requirements:-** Furniture is functional requirement of a room. Living room, drawing room, kitchen, a classroom, laboratory room, office etc. all have their own requirements.

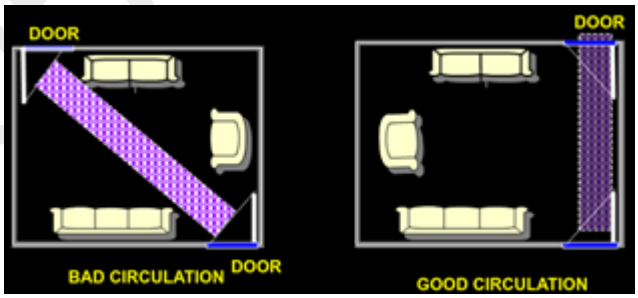

7. **Elegance:** - The term elegance is used to indicate the architechtural effect produce by elevation in relation to width, height, position of doors and windows, materials employed in construction of exterior walls.
8. **Grouping:-** Placing of rooms adjacent to each other with respect to their relative utility is called grouping.
9. **Privacy:** - In all the buildings some sort of privacy is an essential feature.

10. **Flexibility:-** The plan of a building should be prepared by keeping in mind the future requirements.
11. **Roominess:-** The term roominess is used to refer the effect derived from the space of a room i.e., its length, width and height. The planning of the room should be such that maximum benefit is obtained from the minimum dimensions of the room.
12. **Ventilation:-** Windows, doors and ventilators are so placed that natural light and fresh air should be available in all the rooms throughout the day. Windows are placed on opposite walls to create cross ventilation.

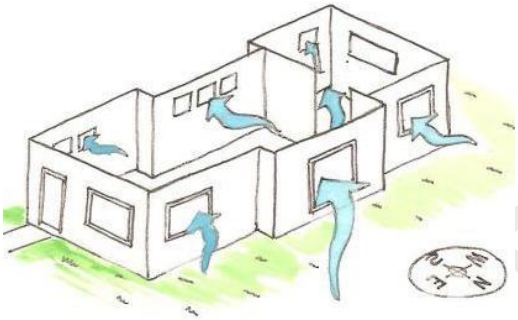

ORIENTATION OF BUILDING

Orientation means placement of rooms with reference to the north direction. The plan can be placed on the plot in various ways to give different orientation. According to civil engineering, the plan should be orientated w.r.t. north in such a way that kitchen lies towards east and north-east, bedrooms are towards south and south-west and maximum hall windows should face north and north-west. For building north exposure is desirable. There are some ancient system of orientation such as "Feng-shui' or 'Vastushastra' which prescribe orientation of rooms with different function according to elements such as water, fire, wind etc. or as per the auspicious direction. This system may have some valid basis but there are systems based on belief and do not come under the scope of scientific studies in engineering. These three principles aspect, prospect and orientation can be employed in the planning by the use of sun-diagram.

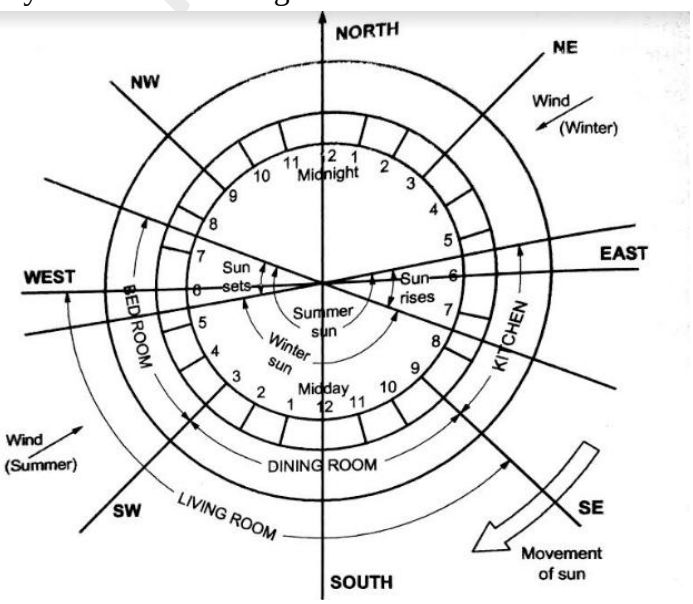

Sun Diagram.

INTRODUCTION BYE-LAWS REGARDING BUILDING LINE

During planning and construction of any building, certain restrictions are laid down by municipal bodies, urban development authorities and other government departments as town planning trusts related to clear spaces to be left round the buildings, permissible height of building, permissible construction areas etc. Hence the proposed plans of buildings are to be prepared according to these bye-laws which are checked and approved by above authorities. Minimum provisions designed from national building code by various authorities to protect the safety of the public with regarding to structural sufficiency, fire hazards and health aspects are called building bye-laws. The building bye-laws also cover aspects of administrative regulations, development control rules and general building requirements, regarding materials, and structural design, rules for electrical installations, lighting, air-conditioning and lifts, regulations for ventilation, acoustics and plumbing services such as water supply, drainage sanitation, and gas supply, safety measures for workers and public during construction, requirements for greenbelts and landscaping, special requirements for low income housing and rules for erection of signs and outdoor display structures.

The building bye-laws and regulations should be enforced by proper authority to achieve the following objectives

1) Building bye-laws allow disciplined growth of buildings and towns and prevent haphazard development.
2) Building bye-laws protect safety of public against fire, noise, health hazards and structural failure.
3) They provide utilization of space. Hence maximum efficiency in planning can be derived from these bye-laws.
4) Building bye-laws give guidelines to the architect or engineer in effective planning and useful in preplanning the building activities.
5) They provide health, safety and comfort to the people who live in buildings.
6) Due to these bye-laws, each building will have proper approaches, light, air, ventilation which are essential for health, safety and comfort.

The building bye-laws and regulations govern the following building aspects
1) Building frontage line
2) Built-up area of the building.
3) Height of building
4) Open space to be left in the sides, back, etc.
5) Provision to the size, height and ventilation of the rooms and the apartments.
6) Provision to water supply and disposal of wastewater and other sanitary provisions.
7) Structural design of the building for its safety.

HEIGHT OF BUILDING: - The vertical distance from the average grade for a building or other structure, or for a wing or distinct portion of a building or other structure, to the highest point of the roof for that wing or distinct portion of the building or structure. Or the maximum height of the

PROF. RASHMI BADE

building depends upon width of street on which building fronts, minimum width of rear space and vicinity of aerodromes.

Width of street	Maximum height of building
< 8m	1.5 times width of street
8m to 12m	12m
> 12m	< 24m

OPEN SPACE REQUIREMENT

The open space around the building is required to be provided to meet requirements regarding lighting, ventilation, future expansion, and approach. Open space for front, rear and side yard depend upon height of building and can be calculated by formula

W=Width of open space around the building in m=3+ (h/10)/3

Where h= height of the building in m < 25m

Open space for yard for the building of height less than 10m should be 3m average but in no case less than 1.8m.

F.S.I (FLOOR SPACE INDEX)

- It is the ratio of total built up area to plot area
- It is a measure of intensity of land use. It is introduced to regulate population density and to control over crowding of dwelling units.
- It limits the floor area of a building in relation to the plot area. Thus if F.S.I is 1, then total permissible area of all the floor in the building is equal to the area of the plot.
- The F.S.I changes as per the locality. In gaothan area F.S.I is more than non gaothan, suburb or outskirts area of a town.

CARPET AREA

- It is defined as actual area of usable room at any floor level. (Literally means the area where carpet can be laid).
- It does not include sanitary accommodation, verandahs, corridors, and passage, stores in domestic building, staircase and shafts for lifts, garages, air condition ducts and plant room.

BUILT UP AREA

- It is the area covered by all floors of a building.
- It includes everything covered under roof. Area occupied by balcony, staircase is excluded from the built up area

SET BACK

- It is the distance measured from centerline of road up to which plinth of building may extend.
- It is provided to facilitate future road widening, parking of vehicles, free circulation of air etc. set back distance is about 1.5 to1.67 times more for theatres, commercial complexes, factories than residential building.

PROF. RASHMI BADE

Type of Road	Minimum set back distance		Ratio of column 3 to column 2
	Residential building	Industrial building	
Village Road	9m	15m	1.67
Major district Road	15m	24m	1.60
National or state highway	30m	45m	1.50

VENTILATION: - Ventilation is used to remove unpleasant smells and excessive moisture, introduce outside air, to keep interior building air circulating, and to prevent stagnation of the interior air. Ventilation includes both the exchange of air to the outside as well as circulation of air within the building. It is one of the most important factors for maintaining acceptable indoor air quality in buildings.

COMPONENTS OF BULIDING

A building has basic two parts:-

1) **Sub structure or foundation: -** It is the lower portion of the building, usually located below the ground level, which transmits the loads of superstructure to the supporting soil.

2) **Super Structure: -** It is that part of structure which serves the purpose of its intended use.

INTRODUCTION TO TYPE OF LOADS ON BUILDINGS: - To get safe structures at the same time without ignoring economy of the structure, it is necessary to estimate the various loads acting suitably. Indian standard code IS: 875–1987 specifies various design loads for buildings and structures. They have grouped various loads as under:

1. Dead loads
2. Imposed loads
3. Wind loads
4. Snow loads
5. Earthquake loads
6. Special loads

Details of earthquake load are covered in IS: 1893 – 1984 which should be considered along with other types of loads given in IS-875. The code also gives various load combinations to be Considered in the design.

1. DEAD LOAD (DL)

1. The dead load in a building comprises the weight of roofs, floors, beams, columns, walls, and partition walls etc. which form permanent part of the building.
2. It is to be found by working out volume of each part and then multiplying with unit weight. Unit weight of various materials is listed in part-I of IS: 875.

3. **IMPOSED LOADS (IL)**

1. The loads which keep on changing from time to time are called as imposed loads. Common Examples of such loads in a building are the weight of the persons, weights of movable partition, dust loads and weight of furniture's.
2. These loads were formerly known as live loads. The minimum values to be assumed are given in IS 875 (part 2)–1987.

PROF RASHMI BADE

3. **WIND LOADS (WL)**

1. The force exerted by the horizontal component of wind is to be considered in the design of buildings. It depends upon the velocity of wind and shape and size of the building.

2. Complete details of calculating wind load on structures are given in IS-875 (Part 3) -1987.

3. SNOW LOADS

IS 875 (part 4) – 1987 deals with snow loads on roofs of the building. For the building to be located in the regions wherever snow is likely to fall, this load is to be considered. The snow load acts vertically and may be expressed in kN/m^2 or N/m^2.

4. EARTHQUAKE FORCES

(i) Earthquake shocks cause movement of foundation of structures. Due to inertia additional forces develop on super structure. The total vibration caused by earthquake may be resolved into three mutually perpendicular directions, usually taken as vertical and two horizontal directions.

(ii) The movement in vertical direction does not cause forces in superstructure to any significant extent. But movement in horizontal directions causes considerable forces.

(iii) The intensity of vibration of ground expected at any location depends upon the magnitude of earthquake, the depth of focus, the distance from the epicenter and the strata on which the structure stands.

(iv) The response of the structure to the ground vibration is a function of the nature of foundation soil, size and mode of construction and the duration and intensity of ground motion. IS: 1893–1984 gives the details of such calculations for structures standing on soils.

PROF. RASHMI BADE

1. OTHER FORCES AND EFFECTS

As per the clause 19.6 of IS 456 – 2000, in addition to above load discussed, account shall be taken of the following forces and effects if they are liable to affect materially the safety and serviceability of the structure:

(a) Foundation movement (See IS 1904)
(b) Elastic axial shortening
(c) Soil and fluid pressure (See IS 875, Part 5)
(d) Vibration
(e) Fatigue
(f) Impact (See IS 875, Part 5)
(g) Erection loads (See IS 875, Part 2) and
(h) Stress concentration effect due to point load and the like.

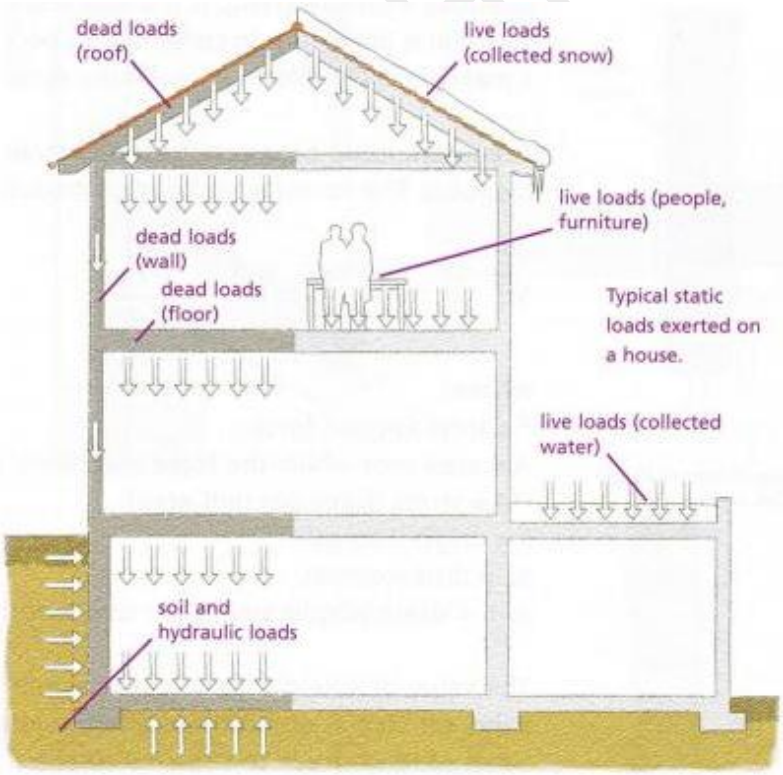

SUBSTRUCTURE

TYPES OF SOILS

'Soil' is the thin layer on the surface of the Earth on which the living beings survive. Soil is the layer which is composed with many substances; in this layer various plants have their roots. Soil is made of many substances like weathered rock particles, and decayed plant and animal matter. Did you know that it takes more than a thousand years to form of a thin layer of soil? Yes, soil is very precious. Soil is made of diverse materials like broken down rock particles and organic material. There are different types of soil and various ways to classify it.

There are many soil classification systems. There are two major systems are the vernacular system and scientific system. Vernacular system is developed by land users. For example, in vernacular system soil can be categorized as red soil, black soil, yellow soil, hot soil, etc. In scientific system the soil can be categorized according to the development of soil or the amount of substances present in the soil. As there are various systems to classify soils, it means soil classification is not static. This makes soil classification vast and sometimes confusing. Categorizing soil or dirt by the size of particles is most common, and can be easily performed at home. This classification helps to understand the basic properties of the soil and helps to conclude if the type of soil is good enough for gardening or farming.

Soil Types

Therefore depending on the size of the particles in the soil, it can be classified into these following types:

1. Sandy soil
2. Silty soil
3. Clay soil
4. Loamy soil
5. Peaty soil
6. Chalky soil

1. Sandy Soil

To check if soil is sandy, moisten a small sample of soil and try to make a ball using your palms. If the soil is sandy, then no dirt balls will form and the soil will crumble and fall through the fingers. This soil type has the biggest particles; and the bigger size of the particles in a soil the better is aeration and drainage of the soil. This soil is granular and consists of rock and mineral particles that are very small. Sandy soil is formed by the disintegration and weathering of rocks such as limestone, granite, quartz and shale. It warms very fast in the spring seasonSandy soil retains a certain amount of moisture and nutrients. In a way sandy soil is good for plants since it lets the water drain easily, so that it prevents root problems.

2. Silty soil

To check if the soil you have is silty, take a small amount of moist soil and rub it between your fingers. If the soil is silty soil, it will feel slick and stick to your fingers. Silty soil is considered

PROF. RASHMI BADE

to be one of the most fertile of soils. It can occur in nature as soil or as suspended sediment in water column of a water body on the surface of the earth. It is composed of minerals like quartz and fine organic particles. It is granular like sandy soil but it has more nutrients than sandy soil and offers better drainage. In case silty soil is dry it has a smoother texture and looks like dark sand. This type of soil can hold more moisture and at times becomes compact. It offers better drainage and is much easier to work with when it has moisture.

3. Clay soil

To identify if the soil is clay soil, take a soil sample and damp it with water. Feel it between your palms. You will find clay soil is sticky and retains a good amount of water. Clay is a kind of material that occurs naturally and consists of very fine grain material with very less air spaces. Due to this it is difficult to work with this soil, because the drainage in this soil is low. Hence, there is possible for water logging to occur, which can harm the roots of the plant. Clay soil becomes very heavy when wet and if cultivation has to be done, organic fertilizers need to be added to the soil. Clay soil is formed after years of rock disintegration and weathering. It is also formed as sedimentary deposits after the rock is weathered, eroded and transported. Clay soil due to its formation process is rich in mineral content.

Given above three types of soil sand, silty and clay are the main ones. Apart from these there are three more soil sub-types mentioned below that contain some amount of the above soils.

4. Loamy Soil

This soil consists of sand, silt and clay to some extent. It is considered to be the perfect soil for gardening. The texture is gritty and retains water very easily, yet the drainage is good. There are various kinds of loamy soil ranging from fertile to very muddy and thick sod. Yet out of all the different kinds of soil, loamy soil is ideal for cultivation. So, in case you are thinking of starting a vegetable patch or a small garden, apply a layer of loamy soil to the garden before you start plantation.

PROF. RASHMI BADE

6. Peaty Soil

This kind of soil is basically formed by the accumulation of dead and decayed organic matter, it naturally contains much more organic matter than most of the soils. It is gen erally found in marshy areas. The decomposition of the organic matter in this soil is blocked by the acidity of the soil. This kind of soil is formed in wet climate. Though the soil is rich in organic matter, nutrients present are fewer in this soil type than any other type. Peaty soil is prone to water logging, but if the soil is fertilized well and the drainage of the soil is looked after, it can be the ideal for growing plants.

6. Chalky Soil

Unlike peaty soil, chalky soil is very alkaline in nature and consists of a large number of stones. The fertility of this kind of soil depends on the depth of the soil that is on the bed of chalk. This kind of soil is prone to dryness and in summers it is a poor choice for plantation, as the plants would need much more watering and fertilizing than on any other type of soil. Chalky soil, apart from being dry also blocks the nutritional elements for the plants like iron and magnesium. Besides the above classification of soil, the next popular classification of soil is according to the pH level of soil. In this classification, soil is either acidic or alkaline soil depending on the amount of humus, organic matter and the underlying bedrock. But, no matter what the type of soil is, every soil has its own advantages and disadvantages and there are various plants that have different requirements. Because, all plants do not need the same kind of soil

PROF. RASHMI BADE

ROCKS AND FOUNDATION STRATA

In geology, rock or stone is a naturally occurring solid aggregate of minerals and/or mineraloids. The Earth's outer solid layer, the lithosphere, is made of rock. Three majors groups of rocks are defined: igneous, sedimentary, and metamorphic. The scientific study of rocks is called petrology, which is an essential component of geology.

Igneous rocks

Igneous rock (derived from the Latin word igneus meaning of fire, from ignis meaning fire) forms through the cooling and solidification of magma or lava. Igneous rock may form with or without crystallization, either below the surface as intrusive (plutonic) rocks or on the surface as extrusive (volcanic) rocks. This magma can be derived from partial melts of pre-existing rocks in either a planet's mantle or crust. Typically, the melting is caused by one or more of three processes: an increase in temperature, a decrease in pressure, or a change in composition. Over 700 types of igneous rocks have been described, most of them having formed beneath the surface of Earth's crust. These have diverse properties, depending on their composition and how they were formed.

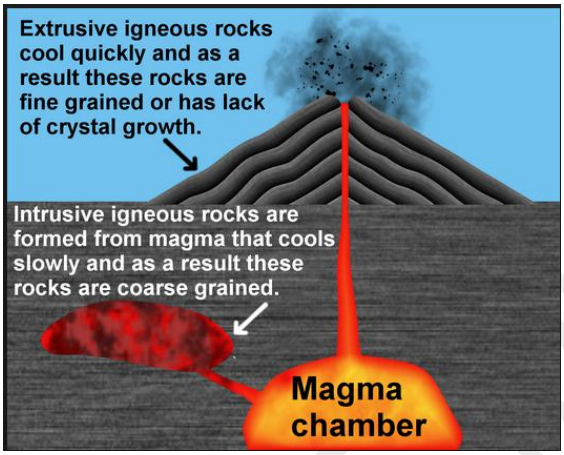

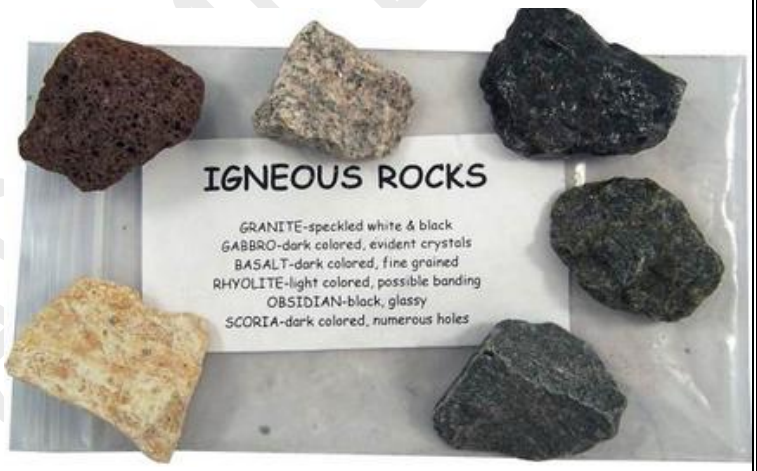

Example: - Basalt, Granite.

Sedimentary rocks

Sedimentary rocks are types of rock that are formed by the deposition of material at the Earth's surface and within bodies of water. Sedimentation is the collective name for processes that cause mineral and/or organic particles (detritus) to settle and accumulate or for minerals to precipitate from a solution. Particles that form a sedimentary rock by accumulating are called sediment. Before being deposited, sediment was formed by weathering and erosion in a source area, and then transported to the place of deposition by water, wind, ice, mass movement or glaciers which are called agents of denudation.

Example: - Sandstone, Limestone.

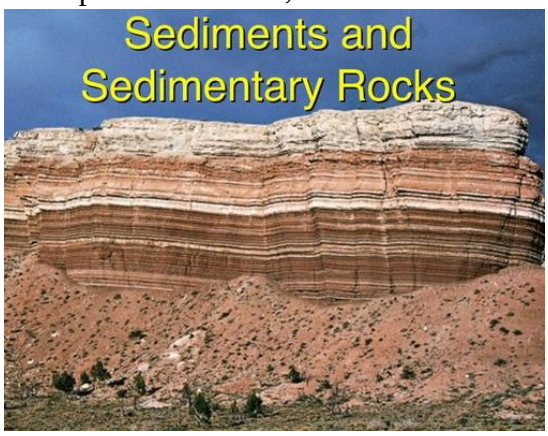

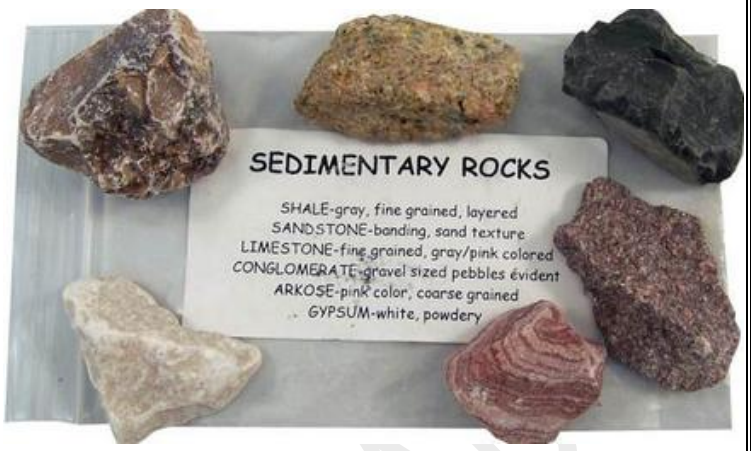

Metamorphic rocks

Metamorphic rocks arise from the transformation of existing rock types, in a process called metamorphism, which means "change in form". The original rock (protolith) is subjected to heat and pressure, (temperatures greater than 150 to 200 °C and pressures of 1500 bars) causing profound physical and/or chemical change. The protolith may be sedimentary rock, igneous rock or another older metamorphic rock.

Example: - Marble.

CONCEPT OF BEARING CAPACITY

Bearing capacity of the soil means the load carrying capacity of the subsoil. This value is determined using the formulae developed in soil mechanics. It depends upon the cohesiveness, frictional properties and unit weight of subsoil. It can be determined by directly by a test known as plate load test. In this test a 300 × 300 mm × 18 mm thick or 450 × 450 mm × 18 mm thick steel plate is kept directly on the subsoil. A short steel column is connected to it and at ground level a platform is built. This platform is loaded with an increment of 5 kN at a time and the settlement is observed through a level. This process of loading and observing settlement is continued till the subsoil yields and sudden sinking is observed. Load settlement curve is plotted and load corresponding to yielding is taken as ultimate bearing capacity of the soil. This value is divided by a factor of safety of 2 to 3 depending

upon the reliability of the soil and the value thus obtained is known as safe bearing capacity (SBC) of soil. Figure shows the typical arrangement of plate load test.

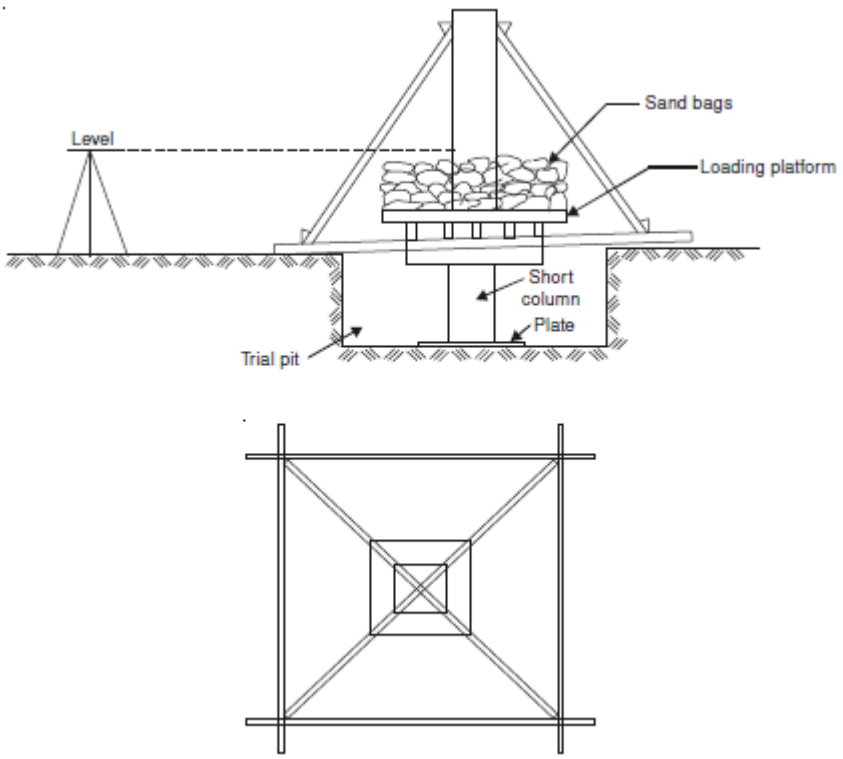

Plate load test

$$Safe\ bearing\ capacity = \frac{Ultimate\ bearing\ capacity}{Factor\ of\ Safety}$$

Bearing capacity of soil may be increased by

1. Increasing the depth of foundation, since the lower strata or ground has natural compaction.
2. Putting granular materials like sand and gravel on the natural soil and then compacting well.
3. By combining the soil in an enclosed area by driving sheet piles or sand piles.
4. Draining out the area, if it is a marshy land.
5. Attempts have been made to improve bearing capacity of soil by chemical treatment also.

TYPES OF FOUNDATION AND THEIR SUITABILITY

1. TYPES OF SHALLOW FOUNDATIONS

Shallow foundations are usually spread foundations in which load is spread to wider area and then transferred safety to soil. Different types of shallow foundations used may be classified into

1. Wall foundation
2. Foundation for Brick Pillars
3. Foundation for R.C.C. columns and
4. Foundation for steel columns.

1. Wall Foundation

Figure shows a typical footing for the wall of a permanent building. The load from wall is transferred to stone masonry through plinth concrete. It is gradually spread with different courses of stone masonry. The projection from course to course is 75 mm on either side. Finally about 150 mm to 200 mm plain concrete bed transfers the load to the ground. Number of courses and depth of each course may be suitably varied depending upon the depth of foundation required. For temporary structures instead of stone masonry brick masonry itself may be taken upto plain concrete bed spreading by 50 mm on each side in each course.

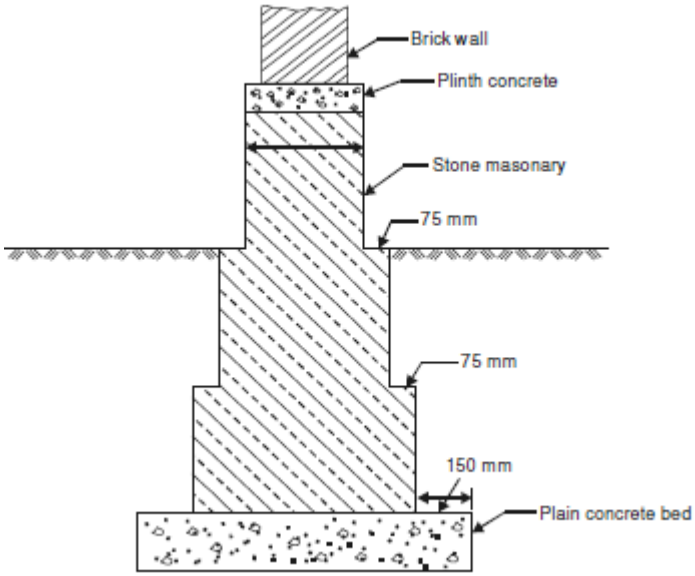

Wall Footing

2. Foundation for Brick Pillars

Knowing the load from pillars and SBC (safe bearing capacity) of soil, area of footing required is calculated. Plain concrete bed of 150 to 200 mm is laid. Then courses of brick masonry are laid giving offsets of 50 mm on all sides and the finally reducing it to brick pillar size. Figure shows a typical foundation for a brick pillar.

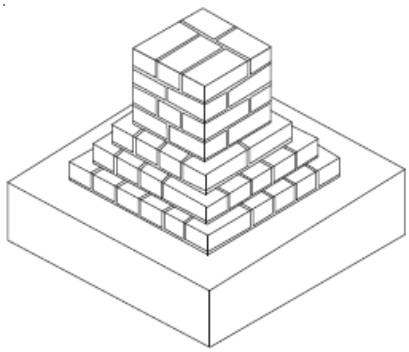

Foundation for Brick Pillars

Earlier inverted arch footings were tried for a series of columns. But due to problem of providing abutment for last column this is given up now.

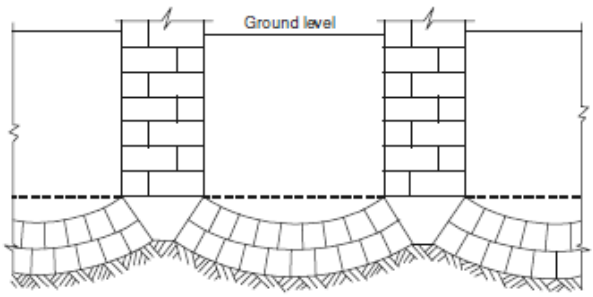

Inverted arch footings for brick pillars

3. Foundation for R.C.C. columns

R.C.C. columns carry considerable load per unit area and hence it needs spreading the load over larger areas on ground. R.C.C. column footings are provided which are subjected to bending and shear.

The various R.C.C. footings provided may be broadly classified as

(i) Isolated Footing

(ii) Combined Footing for two columns

(iii) Combined Footing for multiple columns.

Isolated column footings

For each column when separate footing is provided, it is called isolated column footing. Reinforcements are provided on lower side of footing in both directions. The thickness and reinforcement required are designed. Figure shows three types of isolated footings commonly used.

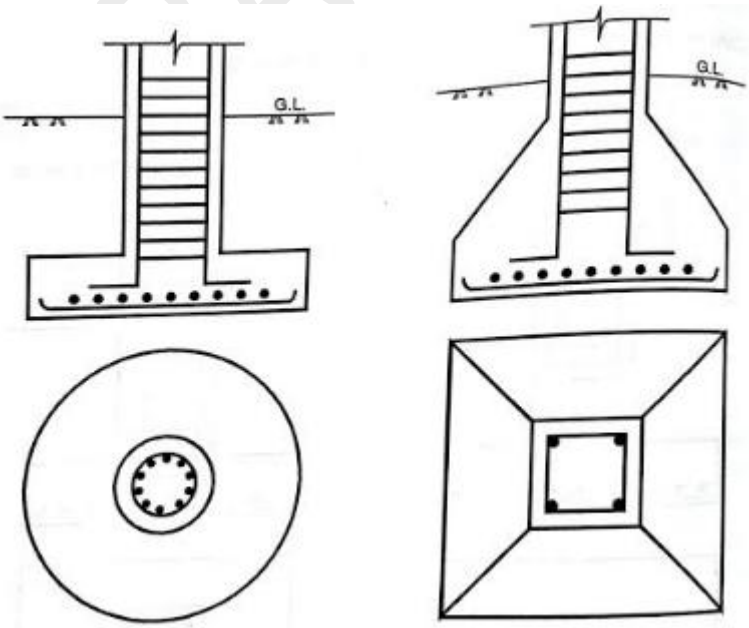

(a) Isolated Column Footing: Circular ***(b) Isolated Column Footing: Slopped***

Isolated footings.

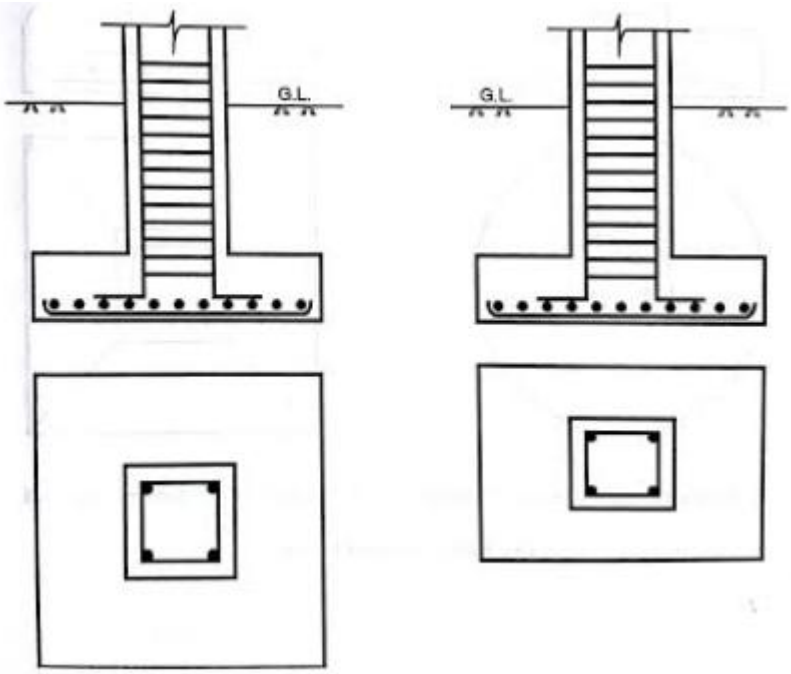

(a) Isolated Column Footing: Square *(b) Isolated Column Footing: Rectangle*

Isolated footings.

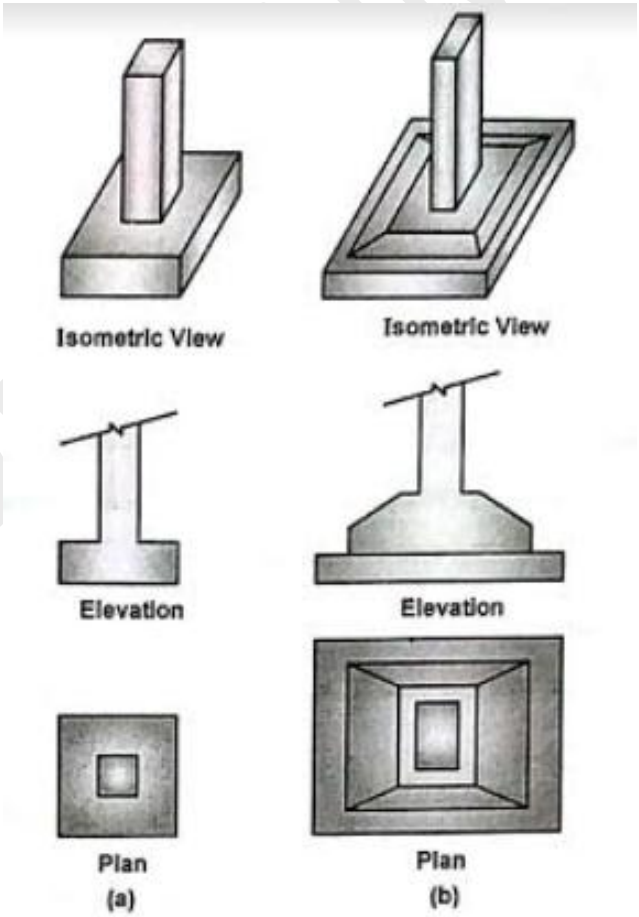

Isolated footings.

Combined footing for two columns

Combined footings are provided for two columns in the following situations:

1. The two columns are close by and if isolated column footings are designed they may overlap.
2. One column is almost on property line and hence it is not permitted to have projection on the other's or public property.

In such situations the following types of footings may be provided.

(i) Rectangular slab type
(ii) Trapezoidal slab type
(iii) Beam and slab type and
(iv) Strap or cantilever footings.

These footings are shown in Fig.

(a) Rectangular slab type

(b)

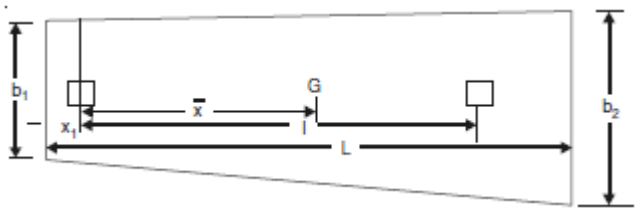

(c) Trapezoidal slab type

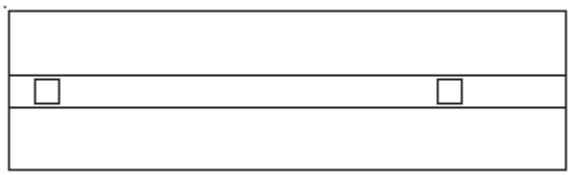

(a) Beam and slab type

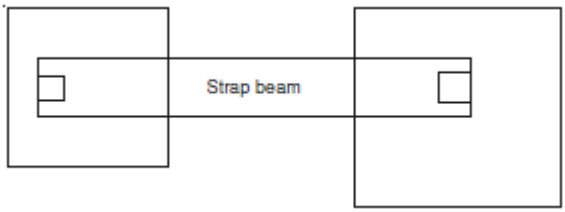

(b) Strap or cantilever footing

Combined footing for two columns

Combined footings for multiple columns

Combined footings supporting a row of columns are called strip footing and it is shown in Fig. In multistorey framed structures a number of columns in a number of rows are to be supported by single footing since isolated or strip footings overlap adjoining footing. By providing raft/mat footing or grid footing this situation can be taken care. This type of footing prevents unequal settlement of columns also. Figure shows these footings.

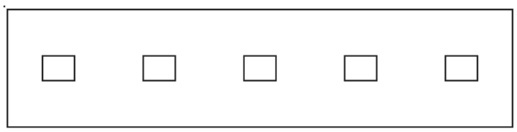

Strip Footing

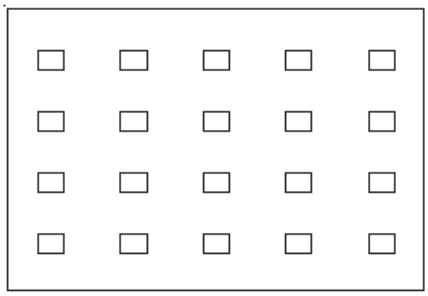

Mat Footing

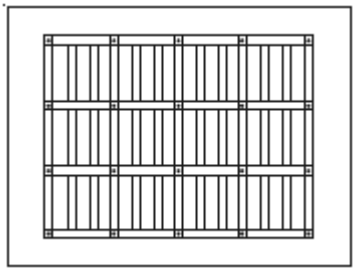

Combined footings for multiple columns

Footings for Steel Columns

Load carried by steel columns per unit area is very high. Steel columns transfer the load to R.C.C. footing which in turn transfer the land to soil. Steel columns are either directly connected to R.C.C. footings or they are provided with grillage foundation. Figure 4.8 shows a typical grillage foundation, which consists of two layers of I-sections placed on concrete bed and fully encased in concrete.

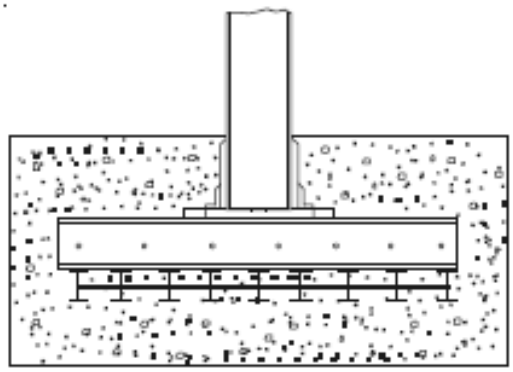

PROF. R. G. BADE

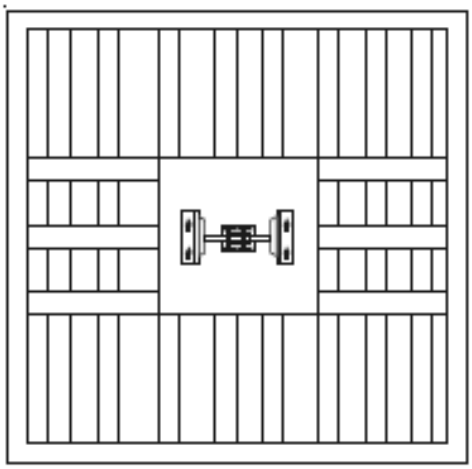

1. TYPES OF DEEP FOUNDATIONS

FOUNDATIONS USING PILES

If suitable hard soil is not available at reasonable depth, it is economical and safe to go for pile foundations instead of spread footings. In water logged soil like black cotton soil this situation is common.

There are two types of piles used for foundations viz., Bearing Piles and Friction Piles.

Bearing Piles: Piles are the poles made of timber, plain concrete, R.C.C. or steel. These piles are hammered down to rest on hard surface. On top of a number of piles a concrete cap is cast and over that construction activity of building starts. Thus bearing piles transfer the load to hard surface directly.

Friction Piles: When hard surface is not met at reasonable depth, the frictional resistance between the adjoining soil and pile is checked and the pile length is kept sufficient enough to transfer the load by friction. Figure shows typical pile foundations.

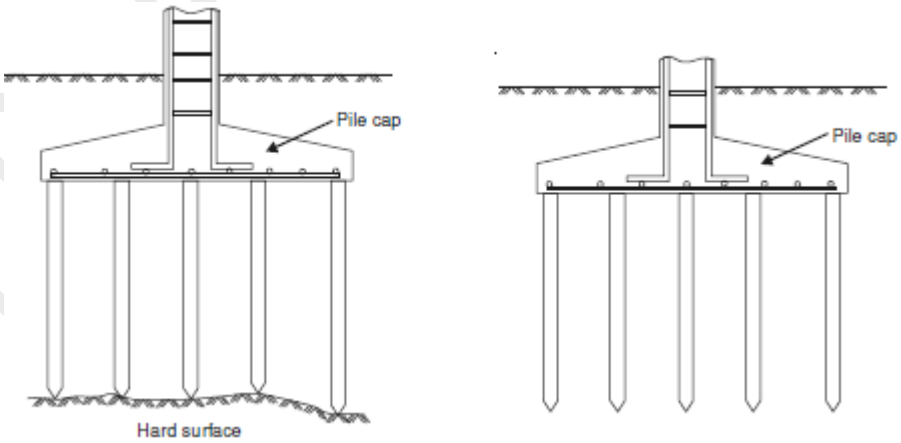

(a) Bearing pile foundation ***(b) Friction pile foundation***

Pile foundation

PROF. RASHMI BADE

SUPERSTRUCTURE

TYPES OF CONSTRUCTION

Wall are important part of superstructure. They are commonly constructed with stones, bricks or hollow concrete blocks. Walls enclose and divide the space in the building. In addition to it if they are made to carry load from roof/floor apart from self weight it is called load bearing construction. If reinforced cement concrete or steel frame consisting of columns, beams, slabs are built first and walls are built only to enclose the area, the load transfer is mainly by beams and columns walls carry only self weight. These walls serve as filler material. Such structures are called framed structures.

1) Load bearing construction

Load bearing walls are built with stone, brick or concrete blocks joined together by cement mortar of 1 cement to 6 sand (1:6). The walls are built course by course. Height of a course in stone masonry, brick masonry and hollow concrete block masonry is 150 mm, 100 mm and 200 mm (or 100 mm) respectively. In load bearing walls verticality of wall should be strictly ensured and vertical joints should be broken. The thickness of wall should be sufficient to transfer the load safely, without exceeding permissible stress. The critical portions in masonry from consideration of stresses are near the openings for doors and windows and the portion where concrete beams rest. Minimum thicknesses used are 375 mm, 200 mm and 200 mm in case of stone, brick and hollow block constructions respectively. It is also recommended that slenderness ratio of wall defined as ratio of effective length or effective height to thickness should not be more than 27. National building code of India (NBC – 1983) defines effective height and effective length.

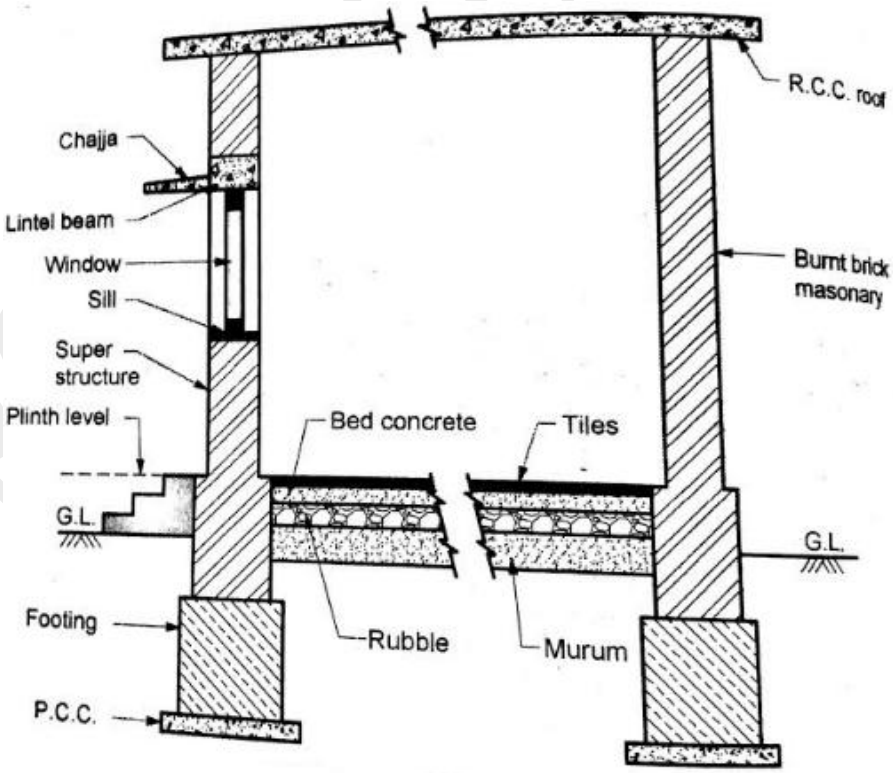

Load bearing Structure.

1) Framed constructions

Framed construction starts with foundations for columns. Columns are then raised. Beams and floors are built simultaneously in case of R.C.C. Construction goes floor by floor. After skeleton of second floors are ready construction of walls is taken up. Construction of multistorey buildings is possible in this type of construction. Advantage of framed construction is interior alteration of rooms is possible by removing or by constructing additional walls. In factories steel frame structures are also used. In these cases flooring is by R.C.C. and roofing is usually with trusses supporting A.C. sheets.

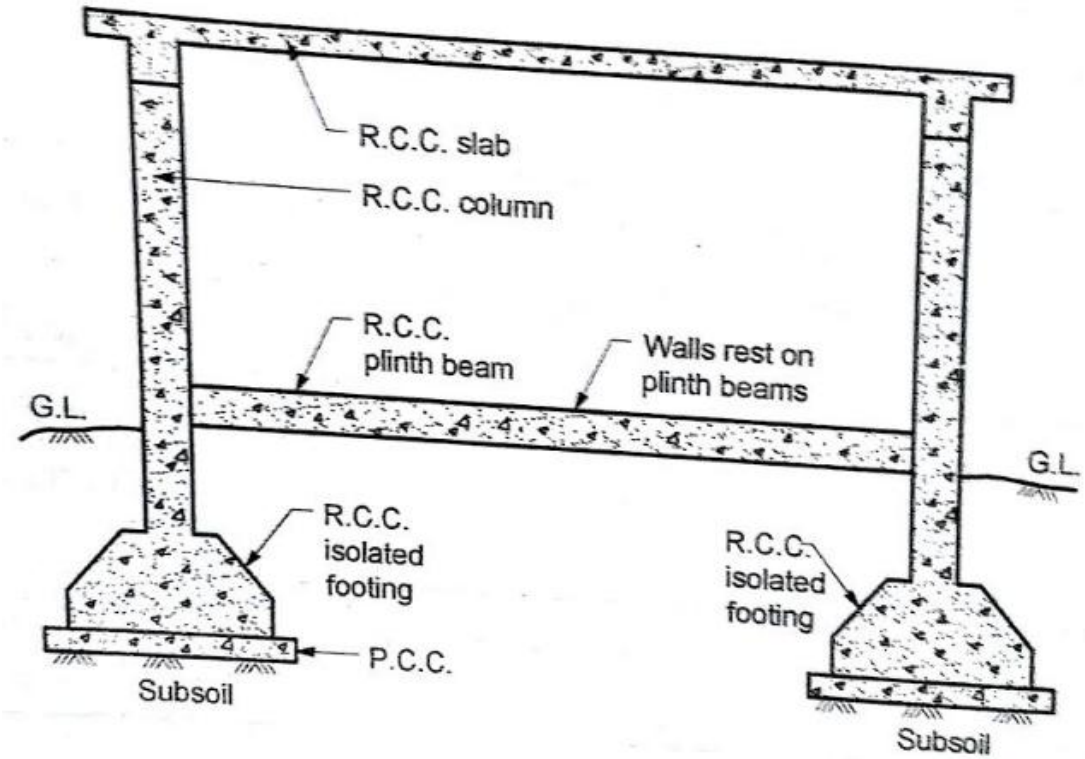

Framed Structure.

2) Composite Construction

If facing and backing of walls are made using different materials it is called composite wall construction. Facing material used is always good in appearance.

The following types of composite constructions are used:

1. Stone slabs facing with brick masonry backing.
2. Dressed stone facing and brick masonry backing.
3. Brick facing with rubble stone masonry.
4. Tile facing and brick backing.
5. Brick facing and concrete backing.
6. Stone facing and concrete backing.

In all these constructions proper bond between facing and backing should be achieved. For this purpose GI or aluminium clamps may be used. In case of brick facing alternate courses of bricks are projected inside backing. Rich plaster is used between facing and backing materials.

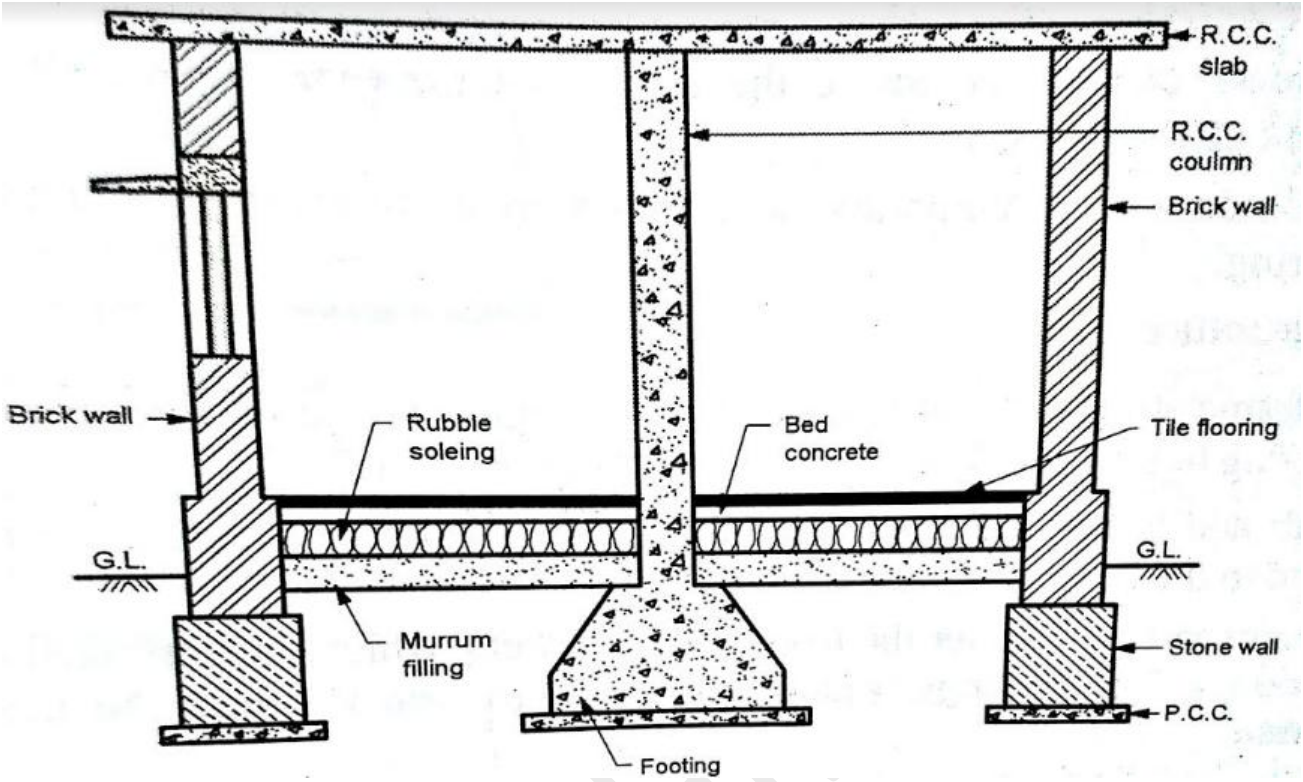

Composite Structure.

BUILDING MATERIALS

INTRODUCTION TO BASIC CONSTRUCTION MATERIALS:-

1. **CEMENT:-** Cement is manufactured by calcifying calcareous material (lime) and argillaceous material (shale and clay) and then clinker so formed is ground to fine powder. Use of cement alone is limited to filling small cracks with its paste. It is mainly used as binding material in mortar and concrete.

Types of Cement

1. Ordinary Portland cement.
2. Rapid hardening cement.
3. Low heat cement
4. Pozzolana cement
5. Expanding cement
6. Quick setting cement
7. White cement.
8. Coloured cement
9. High Alumina cement
10. Blast furnace cement
11. Acid Resistant cement
12. Sulphate Resistant cement.

PROF. RASHMI

Uses of cement

Cement is used in cement mortar and cement concrete and never alone. Major works of Civil Engineering in which cement is used in the above forms are as follows:-

1. Construction of buildings:- Ordinary Portland cement is generally used for making cement mortar and concrete.
2. Construction of highway slabs:- Rapid hardening cement.
3. Construction of dams, retaining walls, bridge abutment (mass concrete):- Low heat cement
4. Marine structures and other underground works:- Blast furnace slag cement.
5. Canal lining culverts or structures where surface is exposed to severe sulphate action:- Sulphate resisting cement.
6. Terrazzo surface, face plasters, ornamental works:- White and colour cement.

Field tests on cement

The following are the field tests on cement.

1. Open the bug and take a good look at the cement. There should not be any visible lumps. The colour of the cement should normally be greenish grey.
2. Thrust your hand into the cement hug, it must give you a cool feelimg. There should not be any lump inside.
3. Take a pinch of cement and feel – between the fingers. It should give a smooth and not a gritty feeling.
4. Take a handful of cement and throw it on a bucket full of water, the particles should float for some time before they sink.
5. Take about 100 grams of cement and a small quantity of water and a stiff paste. From the stiff paste, pat a cake with sharp edges. Put it on a glass plate and slowly take it under water in a bucket. See that the shape of the cake is not disturbed while taking it down to the bottom of the bucket. After 24 hours the cake should retain its original shape and at the same time it should also set and attain some strength.

Grades of cement

Grades of cement available in market ordinary portal and cement (OPC) is classified into following three grades depending upon the strength of cement of 28 days when tests as per IS 4031 – 1988.

1. **OPC – 33 Grade**
   If the 28 days strength is not less than 33 N/mm^2, it is called 33 grade cement.

2. **OPC – 43 Grade**
   If 28 days strength is not less than 43 N/mm^2, it is called 43 grade cement.

3. **OPC – 53 Grade**
   If 28 days strength is not less than 53 N/mm^2, it is called 53 grade cement.

PROF. RASHMI BADE

2. **BRICKS:-** Bricks are obtained by moulding good clay into blocks, which are dried and then burnt. This is the oldest building block to replace stone. Manufacture of bricks was started with hand moulding, sun drying and burning in clamps. A considerable amount of technological development has taken place with better knowledge of the properties of raw materials, use of better machineries and techniques of handling, drying and burning. Bricks are used for the following construction works:
   1. As building blocks.
   2. For lining of ovens, furnaces and chimneys.
   3. To encase steel columns to protect them from fire.
   4. For providing water proofing course to R.C.C. roofs.
   5. For making footpaths and cycle tracks in cities.

Types of Bricks

1. **Conventional bricks:-**
   a) The dimensions of conventional bricks or traditional bricks vary from 21 to 25 cm in length, 10 to 13 cm in width and 7.5 to 10 cm in height in different parts of the country.
   b) The commonly adopted size of conventional brick is 23x11.4x7.5 cm.

2. **Standard brick:-**
   a) In different parts of the country different sizes of bricks are used. Therefore to have a uniform size throughout the country, Indian Standard Institution (ISI) has suggested a uniform brick size is known as standard brick or modular brick.
   b) The nominal size of modular brick or standard brick is 20x10x10 cm and the actual size of brick is 19x9x9 cm. Frog size is 6x4x2cm.

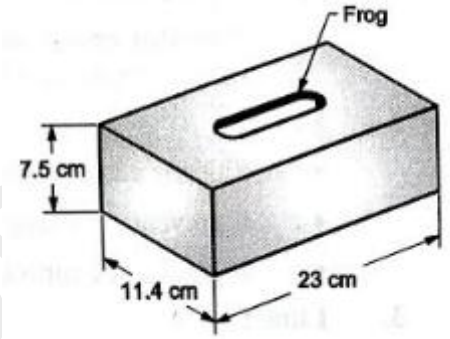

(a) Conventional Brick

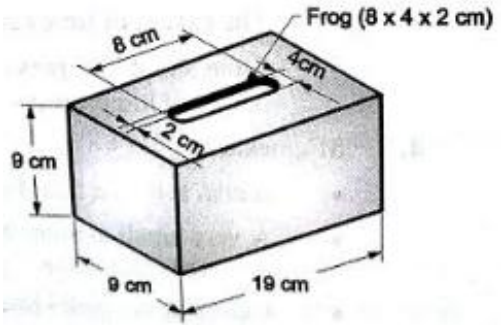

(b) Standard Brick

Uses of brick

1. First and second class bricks are used for all sorts of sound work, especially permanent nature like construction of building, bridge piers, tunnel lining structures.
2. First class bricks are used in architectural compositions and face work of a structure.
3. Third class bricks are used in temporary or less important works like compound wall.
4. Zhama bricks are used as road metal and as aggregate in road concrete.
5. Firebricks are used in acid plants, steel furnaces, cement kiln etc.

PROF. RASHMI BADE

Classification of bricks

1. Bricks are classified as sand faced, rustic multi coloured by quality.
2. Bricks are classified as hand moulded and machine moulded by manufacture.
3. Bricks are classified as Ist class, IInd class, II^{Ird} class and IVth class by utility.

3. **STONE:-** Stone is a naturally available building material, which has been used from the early age of civilization. It is available in the form of rock, which is cut to the required size and shape and used as building block. Stone has been used to build small residential buildings to larges palaces, forts, temples and monuments. Rashtrapathi Bhavan, Jaipur Palace, Red Fort, Birla Mandirs at Delhi, Banaras and Hyderabad, Taj Mahal, Gateway of India and India Gate etc. are the world famous stone buildings.

Uses of Stones

1. Stone masonry is used for constructing foundations, walls, columns and arches in a building.
2. Stones are used as flooring materials. Marble which is having good appearance is used as flooring material in luxurious buildings.
3. Stone slabs are used as damp proof courses, lintels and sometimes even as roofing material.
4. Stones with good appearance are used for the face works of buildings. Polished marble and granite are commonly used materials for the face works.
5. Stones are used for paving of roads, foot path and open spaces around the buildings.

Requirement of a Good Building Stones

1. The structure of the stone should be unstratified (i.e. compact granular structure).
2. It should have high crushing strength more than 100 N/mm2.
3. It should have high durability and sufficient coefficient of hardness more than 14.
4. It should have equigranular texture.
5. It should have high specific gravity ranges from 2.8 to 2.4.

Artificial Stones or Cast Stones

1. Artificial stones are prepared by mixing lime or cement, sand and stone under heat and pressure.
2. Desired shape is given to the artificial stone by taking the mixture of lime or cement, sand and stone in moulds.
3. Artificial stones can be made by various methods such that it seems like original stone material in composition and properties.
4. Artificial stones can be prepared at site under construction or in factory.
5. Concrete blocks, hollow blocks, light weight concrete blocks named as siporex, bricks, fibre mould stones are the some of the examples of artificial stones.

PROF. RASHMI BADE

flagstone

stone wall

cut stone

rubble

4. **AGGREGATES:-** Construction aggregate, or simply "aggregate", is a broad category of coarse particulate material used in construction, including sand, gravel, crushed stone, slag, recycled concrete and geosynthetic aggregates. Aggregates are the most mined material in the world. Aggregates are a component of composite materials such as concrete and asphalt concrete; the aggregate serves as reinforcement to add strength to the overall composite material. Due to the relatively high hydraulic conductivity value as compared to most soils, aggregates are widely used in drainage applications such as foundation and French drains, septic drain fields, retaining wall drains, and road side edge drains. Aggregates are also used as base material under foundations, roads, and railroads. In other words, aggregates are used as a stable foundation or road/rail base with predictable, uniform properties (e.g. to help prevent differential settling under the road or building), or as a low-cost extender that binds with more expensive cement or asphalt to form concrete.

PROF. R. G. BADE

Properties of Fine Aggregates

Since fine aggregate is used as a major ingredient of concrete, it is desirable to study its properties in some detail. Following properties are of importance in aggregates.

1. **Size**
   a) The largest size which comes under the range of fine aggregates is 4.75 mm. Using the largest size will give a more dense concrete, but a mixture of all sizes is more desirable and more economical.
   b) If cement mortar is prepared for purpose of masonry work or plastering work, then very fine sand of uniform size is used.
2. **Shape**
   a) Sand of irregular nodular shape is preferable to completely round grained sand.
   b) Shape of the aggregate plays a more important role in coarse aggregate rather than fine aggregate.
3. **Surface texture**
   a) Generally rough surfaced aggregate is preferable to smooth aggregates.
   b) This property is also related with coarse aggregate.
5. **Strength**
   a) The strength of aggregate alone cannot ensure strength of concrete.
   b) Strength of coarse aggregate is more important.
6. **Specific gravity**
   1. Specific gravity of aggregate is the ratio of its density to the density of water.
   2. This is used for concrete mix design and if not specified gravity is taken as 2.7 as the specific gravity of majority of aggregates obtained from different sources falls between 2.6 and 2.8.
7. **Water absorption**
   1. Generally, for sand, water absorption is negligible.
   2. It is desirable that water absorption be kept minimum.

Properties of Coarse Aggregates

Coarse aggregates are obtained from stone quarries and stone crushers. The size between 4.75 mm to 80 mm is termed as coarse aggregate.

1. **Size**
   a) The size of coarse aggregate depends on the use to which the concrete is to be put. For mass concreting works without complicated reinforcement, larger aggregates of 80 mm, 40 mm, 20 mm size are used.
   b) For ordinary construction of residential or other buildings, 20 mm is the maximum size that will be used. In concrete mix design gradingof aggregates is done and proportion of each size is determined by using the grading curves, charts, tables or other methods.
2. **Shape**
   1. The shape of aggregate is an important characteristic as it affects the workability of concrete. It is also affects the strength.
   2. In general, angular aggregate is preferable to rounded and smooth aggregate for following reasons:-

PROF. RASHMI BADE

(i) Angular aggregate shows better interlocking effect, which gives a superior concrete.
(ii) The total surface area of rough angular aggregate is more than smooth rounded aggregate; hence bond formation is enhanced giving greater bond strength.

3. Surface texture

1. The surface of the aggregate may be smooth, polished, rough or dull.
2. A rough surface provides more area for bonding with cement paste and gives more strength. But where workability is required, rough textured aggregate will be less workable and more harsh.

4. Water absorption

1. The water absorption of coarse aggregate is measured by the percent increase in weight of an oven dry sample after immersion in water for 24 hours.
2. But this does not give the true picture, and many times, the absorption for a period equal to final setting time of cement is measured.

5. Specific gravity

1. The specific gravity of aggregate is determined along with the water absorption as specified in IS 2386 part III 1963.

8. REINFORCING STEEL:- Steel is an alloy of ferrous metal with 0.25 to 1.5 per cent of carbon. Higher the carbon content, harder is the steel. Steel bars of circular cross sections are mainly used as reinforcement to strengthen concrete structures. There are three types of reinforcing steel:

1. Mild steel
2. High Yield Strength Deformed bars (HYSD)/TOR steel and
3. High tensile steel.

1. Mild Steel

It contains carbon upto 0.23 to 0.25%. Higher value is permitted for bars of 20 mm and above diameter. It is available in diameters of 6, 10, 12, 16, 20, 25 and 32 mm. Its yield strength is 250 N/mm2 and young's modulus 2 × 105 N/mm^2. It was very commonly used reinforcement in concrete. But nowadays TOR steel is replacing it. It is used as window bars, for grills and for making steel gates.

2. HYSD Bars/TOR Steel

Two types of TOR steel bars are available. They are Fe-415 and Fe-500. The number associated with the designation indicates the tensile strength of bar in N/mm2. These bars are

PROF. RASHMI BADE

provided with ribs deformation on surface so that bond between concrete and steel improves. These bars are available in diameters 8, 10, 12, 16, 20, 22, 25, 28 and 32 mm. Nowadays these bars are replacing mild steel bars as reinforcement since their strength in tension and bond is higher. These are also used as wind bars.

3. ***High Tensile Bars***
   High tensile steel bars are made with 0.8 % carbon and 0.6 % manganese apart from small percentages of silicon, sulphur and phosphorous. The process of making these wires involve cold drawing and tempering. They are usually available in 2, 3, 4, 5, 6, 7 mm diameters. They may be bundled with number of them to form a strand. These bars are having tensile strength as high as 1400 N/mm2 to 1900 N/mm2. The young's modulus of steels is also same as that of mild steel. High tensile bars are used as reinforcement in prestressed concrete.

9. **STRUCTURAL GLAZING:-** Structural glass is glass which has gone through a manufacturing process to enable it to be used for structural elements of buildings. The resulting product enables walls, floors and ceilings in buildings to be transparent and can even be load bearing. Structural glazing is made by "heating sheets of glass uniformly after manufacture until it is plastic and then rapid cooling with jets of air. The outer layers closest to the jets of air cool and solidify first; they contract as they cool. As the inner layers try to follow they throw the outer layers into compression. This process creates a glass that is about 7 times stronger than ordinary/untreated float glass".

Characteristics of glass claddings

Following are the various characteristics of glass cladding in case of structural glazing.

1. It is totally safe.
2. It is asthetical and recyclable.
3. It is energy saver and time saver as per the constructional aspect is concerned.

Types of glass and used for cladding work

Following are the various types of glass used for cladding work.

1. **Tempered safety glass**
   These are plain or coloured tempered safety glass commonly used for cladding. These type of glass is easy in cleaning and maintenance. Tempered glass used for cladding provides resistance to pressure, temperature variations and impact loads.

2. **Vitrified glass**
   These type of glass are more stable and available in wide colour, varieties, shades and range. Vitrified glass has abrasion resistance, enhanced solar control performance; covers apndrel panels and virtually any pattern can be screen printed.

Advantages of glass cladding in structural glazing

Following are the various advantages of glass cladding.

1. Use of glass in construction work adds beauty to the building.
2. Its use fulfils the architectural view for the external decoration and beauty.
3. Using glass in interior of the building saves the space inside the building.
4. Glass cladding in building fulfill the functional requirement of lighting, heat retention and energy conservation.
5. Glass is a bad conductor of heat; hence it saves energy in air conditioning of building.

Disadvantages of glass cladding

Following are some of the disadvantages of glass cladding.

1. It is very costly and may increase the budgeted cost of construction work.
2. Use of glass also enhances the cost of security.
3. Its use in hilly area and desert may cause more maintenance cost.
4. It is also unsafe for earthquake proven area.

10. **STRUCTURAL STEEL:-** Structural steel is steel construction material, a profile, formed with a specific shape or cross section and certain standards of chemical composition and mechanical properties. Structural steel shape, size, composition, strength, storage, etc., is regulated in most industrialized countries. Structural steel members, such as I-beams, have high second moments of area, which allow them to be very stiff in respect to their cross-sectional area.

Uses

1. Mild steel is used as structural and non – structural steel in the form of various section like I section, channel, angle, flat and also in the form of round bars as reinforcement in concrete.
2. Tor steel is extensively used as reinforcement in R.C.. works.
3. Wires of high tensile strength (tendons) are used in prestressed concrete. These are available in the range of 1.5 mm to 8 mm diameter with their ultimate stress ranging from 1500 N/mm^2 to 2350 N/mm^2.

PROF. RASHMI BADE

11. CONCRETE TYPES

(a) PCC (PLAIN CEMENT CONCRETE):- The intimate mixture of cement, sand, coarse aggregate (jelly) and water is known as plain cement concrete. A small quantity of admixtures like air entraining agents, water proofing agents, and workability agents may also be added to impart special properties to the plain cement concrete.

Uses of plain cement concrete are listed below

1. As bed concrete below the wall footings, column footings and on walls below beams.
2. As sill concrete to get a hard and even surface at window and ventilator sills.
3. As coping concrete over the parapet and compound walls.
4. For flagging the area around the buildings.
5. For making pavements.
6. For making tennis courts, basket ball courts etc.

(b) RCC (REINFORCED CEMENT CONCRETE):- Concrete is good in resisting compressive stress but is very weak in resisting tensile stresses. Hence reinforcement is provided in the concrete wherever tensile stress is expected. The best reinforcing material is steel, since its tensile strength is high and bond between steel and concrete is good. Since elastic modulus of steel is quite high compared to concrete, the force developed in steel is high. A cage of reinforcements is prepared as per the design requirements, kept in the form work and then green concrete is poured. After the concrete hardens, the form work is removed. The composite material of steel and concrete, now called R.C.C. acts as a structural member and can resist tensile as well as compressive forces efficiently.

Uses of R.C.C.

1. R.C.C. is used as a structural member wherever bending of the member is expected. The common structural elements in a building where R.C.C. is used are:

(a) Footing
(b) Columns
(c) Beams, lintels
(d) Chejjas, roof slabs
(e) Stairs.

2. R.C.C. is used for the construction of storage structures like:

(a) Water tanks
(b) Dams
(c) Silos, bunkers

3. They are used for the construction of

(a) Bridges
(b) Retaining walls
(c) Docks and harbours
(d) Under water structures

PROF. RASHMI BADE

4. R.C.C. is used for building tall structures like

(a) Multistorey buildings
(b) Chimneys
(c) Towers.
5. R.C.C. is used for paving
(a) High ways
(b) City roads
(c) Airports.

(c) PRESTRESSED CONCRETE (PSC):- In prestressed concrete elements, calculated compressive stresses are introduced in the zone wherever tensile stresses are expected when the element is put to use. Thus in bridge girders, bottom side of beam tensile stresses develop when deck slab is placed and vehicles start moving on the bridge. Hence before girder is placed in its position compressive stresses are introduced at bottom side. This is achieved by pulling the high tensile wires before concrete is poured in the form work of beam and releasing the pull only after concrete hardens (pretensioned prestress concrete). In another method, it may be achieved by providing a duct from end to end in the beam while casting the beam. Then high tensile wire is passed through the duct and after stretching, it is anchored to the ends of beams. This is called post-tensioning prestress beam. ACI committee defines prestressed concrete as the one in which internal stresses have been introduced such that the stresses resulting from given external loadings are counter-acted to a desired degree. Prestressed concrete is commonly used in making the following structural elements.

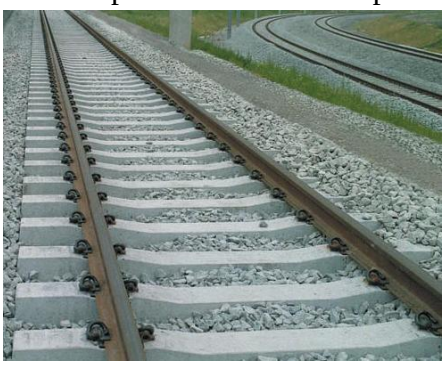

1. Beams and girders.
2. Slabs and grid floors.
3. Pipes and tanks
4. Poles, piles, sleepers and pavements.
5. Shell and folded plate roofs.

PROF. RASHMI BADE

(d) PRECAST CONCRETE:- Usually concrete structures are built by casting them in their final position in the site by providing form work, pouring concrete and then removing the form work. It is called as cast-in-situ construction. If concrete elements are cast in factories or elsewhere and transported to their final destination, they are called precast elements. Since the elements are cast in factories where controls are better, they are superior to cast in situ elements. However, the disadvantage is cost of transportation and achieving desired connections on site. Precast concrete is used in the following:

1. Pipes and tanks
2. Poles, piles, sleepers and pavement
3. Lintel beams
4. Beams and girders
5. Building blocks
6. Wall panels
7. Manhole covers

(e) READY MIX CONCRETE:- Ready-mix concrete is a type of concrete that is manufactured in a factory or batching plant, according to a set recipe, and then delivered to a work site, by truck mounted transit mixers . This results in a precise mixture, allowing specialty concrete mixtures to be developed and implemented on construction sites. The first ready-mix factory was built in the 1930s, but the industry did not begin to expand significantly until the 1960s, and it has continued to grow since then.

Ready-mix concrete is sometimes preferred over on-site concrete mixing because of the precision of the mixture and reduced work site confusion. However, using a pre-determined concrete mixture reduces flexibility, both in the supply chain and in the actual components of the concrete. Ready Mixed Concrete is also referred as the customized concrete products for commercial purpose. the Ready-mix Concrete Company offer different concrete according to user's mix design or industrial standard.

Properties

1. Prepared in automated computerized batch mixing plants, hence of highest quality control.
2. Contain retarders.
3. Concrete must be transported in agitator trucks.

Advantages of RMC

1. As it is prepared in centralized batching plants, any amount of concrete can be produced.

2. Less consumption of cement in concrete.
3. Wastage of material is a avoided which is unavoidable by conventional concreting methods.
4. Time saving concreting method, as it is ready to use.
5. Person working on site can concentrate on placing, instead preparation. Hence better results may be obtained.
6. Economical in cost.
7. Easy to operate.

Limitations of RMC

1. Costly – Cost is very high if used for small projects.
2. No personal control.

USE OF ECO-FRIENDLY MATERIALS IN CONSTRUCTION

1) **Renewable materials: -** Ecofriendly materials can be obtained from natural resources which can be renew i.e. present in plenty.
2) **Reuse of waste: -** From various sources like domestic, industrial, commercial etc. different types of wastage are generated some of these wastes can be used as ecofriendly material for construction.

Building design should be economic, socially appreciable, energy efficient and with minimal environmental impacts, following the principles of sustainable development. The present facilities in building design which are environmentally less acceptable should be upgraded in such a way that it puts less pressure on natural resources and minimizes waste production. Modern designers are adopting innovative approaches to satisfy client's choice at reasonable financial and environmental costs. Site selection and proper orientation to provide natural light and ventilation along with reduced energy requirements have been some of the major considerations in this regard.

PROF. RASHMI BADE

Eco-friendly Materials

Production and usage of practically all types of building materials during construction and demolition have some impact on the environment in one way or the other. Extraction and processing of building material is associated with energy consumption and waste generation, which vary depending upon the type of the building. Local materials used for building have less environmental implications in terms of energy use and waste production. The quality of building material chosen for construction needs to be assessed from the point of view of environmental impacts. Production and use of building materials have the following environmental impacts:

(i) Energy consumption and related impacts.
(ii) Physical degradation of environment.
(iii) Depletion of natural resources and biodiversity.
(iv) Gaseous emissions causing global warming and acid rains.
(v) Toxic emissions and health effects.
(vi) Occupational health hazards.

Types of ecofriendly materials

1) Stone dust
2) Precast cement concrete blocks
3) Lightweight concrete blocks
4) Clay roofing tiles
5) Industrial bricks
6) Cement paint
7) Flyash bricks
8) Flyash paver blocks
9) Concrete with coal flyash
10) Concrete with rice husk flyash.

Properties of Ecofriendly Materials

Following are the various properties of eco-friendly materials.

1. It is biodegradable.
2. It is renewable source.
3. It is reused and recycled.
4. It increases durability and life span of living bodies.
5. It aids energy efficiency in building.
6. It reduces air pollution, land pollution and water pollution.
7. It is locally available.

Conventional Eco-friendly Material

Following are the various conventional eco-friendly materials.

1. Bamboo, bamboo based particle board and ply board, bamboo matting.
2. Sun dried bricks.
3. Cement paint.

PROF. RASHMI BADE

4. Precast cement concrete blocks, lintels, slab structural and non-structural modular elements.
5. Calcium silicate boards and tiles.
6. Clay roofing tiles.
7. Epoxy resin system, flooring, sealants, adhesives and admixtures.
8. Fly-ash sand lime bricks and paver blocks.
9. Micro concrete roofing tiles.
10. Stone dust.

PROF. RASHMI BADE