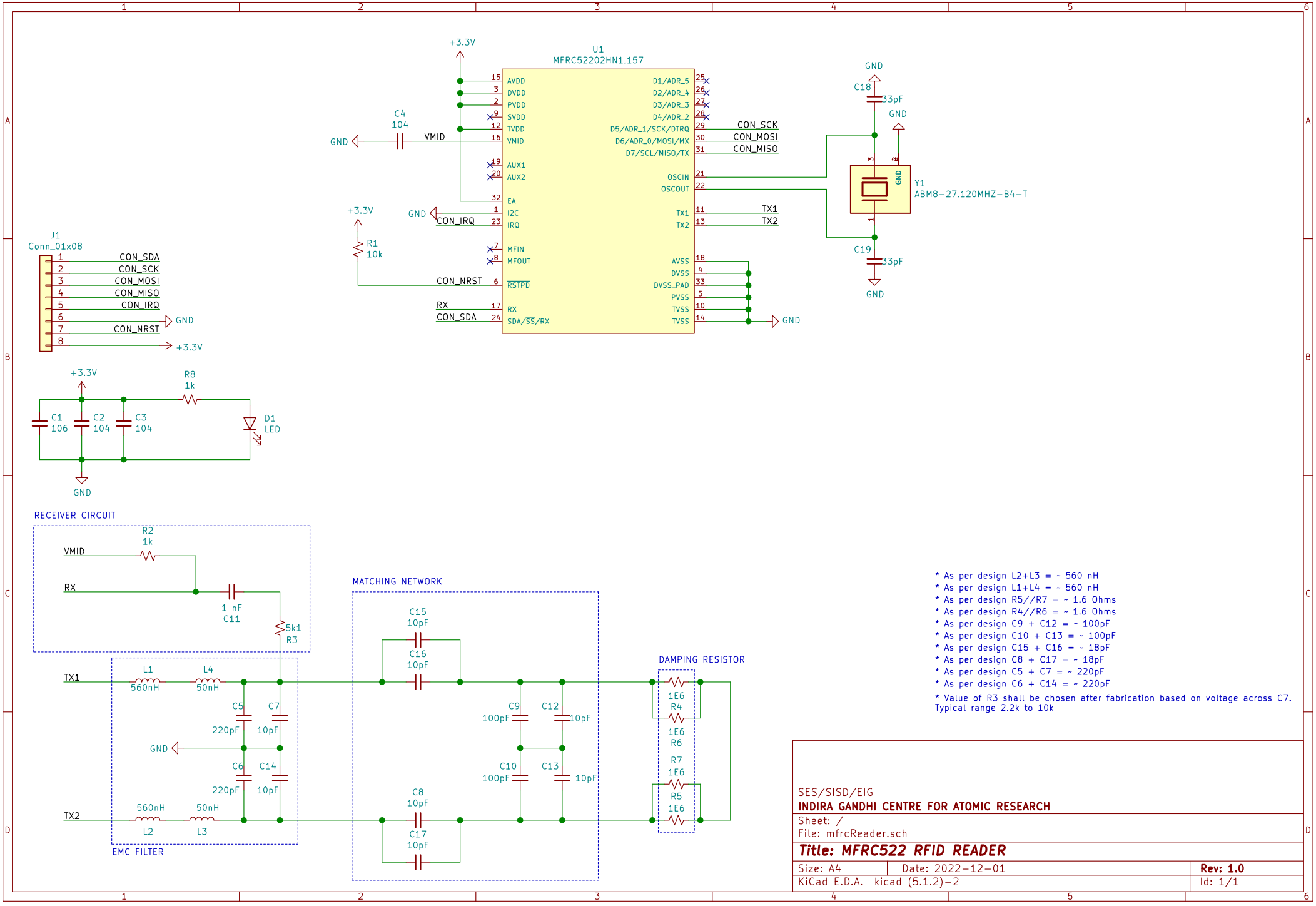
U1
MFRC52202HN1,157
AVDD
DVDD
PVDD
SVDD
TVDD
VMID
AUX1
AUX2
EA
I2C
IRQ
MFIN
MFOUT
RSTPD
RX
SDA/SS/RX
D1/ADR_5
D2/ADR_4
D3/ADR_3
D4/ADR_2
D5/ADR_1/SCK/DTRQ
D6/ADR_0/MOSI/MX
D7/SCL/MISO/TX
OSCIN
OSCOUT
TX1
TX2
AVSS
DVSS
DVSS_PAD
PVSS
TVSS
CON_SCK
CON_MOSI
CON_MISO
CON_IRQ
CON_NRST
CON_SDA
+3.3V
GND
C4
104
R1
10k
C18
33pF
C19
33pF
Y1
ABM8-27.120MHZ-B4-T
J1
Conn_01x08
CON_SDA
CON_SCK
CON_MOSI
CON_MISO
CON_IRQ
CON_NRST
C1
106
C2
104
C3
104
R8
1k
D1
LED
RECEIVER CIRCUIT
R2
1k
VMID
RX
1 nF
C11
5k1
R3
MATCHING NETWORK
C15
10pF
C16
10pF
C8
10pF
C17
10pF
C9
100pF
C12
10pF
C10
100pF
C13
10pF
DAMPING RESISTOR
1E6
R4
1E6
R6
R7
1E6
R5
1E6
TX1
TX2
L1
560nH
L4
50nH
L2
560nH
L3
50nH
C5
220pF
C7
10pF
C6
220pF
C14
10pF
EMC FILTER
* As per design L2+L3 = ~ 560 nH
* As per design L1+L4 = ~ 560 nH
* As per design R5//R7 = ~ 1.6 Ohms
* As per design R4//R6 = ~ 1.6 Ohms
* As per design C9 + C12 = ~ 100pF
* As per design C10 + C13 = ~ 100pF
* As per design C15 + C16 = ~ 18pF
* As per design C8 + C17 = ~ 18pF
* As per design C5 + C7 = ~ 220pF
* As per design C6 + C14 = ~ 220pF
* Value of R3 shall be chosen after fabrication based on voltage across C7.
Typical range 2.2k to 10k
SES/SISD/EIG
INDIRA GANDHI CENTRE FOR ATOMIC RESEARCH
Sheet: /
File: mfrcReader.sch
Title: MFRC522 RFID READER
Size: A4
Date: 2022-12-01
Rev: 1.0
KiCad E.D.A. kicad (5.1.2)-2
Id: 1/1