Solomon Islands
Ministry of Mines, Energy and Rural Electrification
Solomon Power

THE PROJECT FOR FORMULATING RENEWABLE ENERGY ROAD MAP IN SOLOMON ISLANDS

FINAL REPORT

MAY 2021

Japan International Cooperation Agency (JICA)

Tokyo Electric Power Services Co., Ltd. (TEPSCO)

Deloitte Tohmatsu Consulting LLC (DTC)

Location Map

Source: Prepared by JICA Project Team based on UN Geospatial Information Section and UN Solomon Islands Country Facts

The Project for Formulating Renewable Energy Road Map in Solomon Islands
Final Report

Table of Contents

Executive Summary
Chapter 1 Introduction 1-1
1-1 Background of the Study 1-1
1-2 Purpose of the Project 1-1
1-3 Project Period 1-1
1-4 Area for RERM 1-1
1-5 Relevant Ministries, Agencies and Organizations 1-2
1-6 Overall Project Schedule 1-4
Chapter 2 Energy Sector in Solomon Islands 2-1
2-1 Basic Policy in Power Sector 2-1
2-2 Power Demand in Honiara Grid 2-3
2-3 Existing Power Supply Facility 2-5
2-4 Power Development Plan 2-9
2-5 Power Development Potential 2-21
2-6 Challenges for RE 100% Supply 2-32
2-7 Current Situation in Private Investment 2-32
2-8 Relating Laws for Implementation Promotion 2-33
Chapter 3 Study on Enabling Technology for Renewable Energy 3-1
3-1 Enabling Technology for Renewable Energy 3-1
3-2 Case Study of Enabling Technology 3-7
3-3 Identification of Applicable Technology for Honiara 3-9
Chapter 4 Examination of the Renewable Energy Development Scenario 4-1
4-1 Electric Power Demand Forecast 4-1
4-2 Power Development Plan 4-2
4-3 Evaluation on Renewable Energy Development Possibility 4-7
4-4 Introduction of BESS 4-10
4-5 Consideration of BESS Capacity Required 4-11
4-6 Setting of RE Development Scenario 4-15
4-7 Conditions for Power System Analysis 4-16
Chapter 5 Examination of Scenarios 5-1
5-1 Study of Feasible Renewable Energy 100% Supply Scenario in Honiara Grid 5-1
5-2 Selection of RE Development Scenarios up to 2030 5-2
5-3 Study on the RE Development Scenario by 2030 5-2
5-4 RE Development Scenario to be Recommended by 2030 5-5

5-5 Sensitivity Analysis – Confirmation of Robustness of Recommended Scenario –.....5-12
5-6 Recommended Renewable Energy 100% Scenario.....5-17
5-7 Confirmation of 2020 results and impact on recommended RE100% scenario.....5-19
5-8 Impact on supply and demand balance.....5-20
5-9 Impact on recommended scenarios.....5-22
5-10 Consideration of 2030 RE 100% supply scenario.....5-22
5-11 Confirmation of PV development plan status and impact on BESS introduction plan.....5-23
5-12 BESS requirements in the recommended RE100% scenario.....5-24
5-13 Conceptual design of BESS.....5-27
5-14 Power System Planning.....5-36
5-15 Power System Analysis.....5-37
5-16 Proposal for introduction of the N-1 criterion in transmission system planning.....5-52
5-17 Transmission System Losses.....5-61
Chapter 6 Financial Analysis.....6-1
6-1 Conditions for Economic and Financial Analysis.....6-1
6-2 Study on Impact of Other Players- International Organizations, IPPs and Self-generation.....6-1
6-3 Financial Viability of SP.....6-5
Chapter 7 Promotion of Formulation and Implementation of Road Map.....7-1
7-1 Review of the Issues raised in the 1st Phase.....7-1
7-2 Study on the Pacific and the Other Countries.....7-1
7-3 Technical Suggestion on Operations of Power Plants.....7-6
7-4 Suggestion on Securing Land for new Solar PV.....7-6
7-5 Study on Promotion Method of Small/Medium-scale Solar PV.....7-9
7-6 Promotion of Private Investment.....7-10
7-7 Capacity Building Strategy.....7-14
7-8 Suggestion on the Regulatory Authority in the Power Sector.....7-23
7-9 Activities of Major Donors and International Organization.....7-33
Chapter 8 Renewable Energy Road Map.....8-1
8-1 Position of the RERM.....8-1
8-2 Development of RERM.....8-1

APPENDIX

A 5-1A	:	Power flow diagram in 2020 at daytime peak load…….	A-1
A 5-1B	:	Power flow diagram in 2020 at daytime peak load (Loading Rate)…….....	A-2
A 5-2A	:	Power flow diagram in 2020 at nighttime peak load……...	A-3
A 5-2B	:	Power flow diagram in 2020 at nighttime peak load (Loading Rate)…….	A-4
A 5-3A	:	Power flow diagram in 2025 at daytime peak load…….	A-5
A 5-3B	:	Power flow diagram in 2025 at daytime peak load (Loading Rate)……	A-6
A 5-4A	:	Power flow diagram in 2025 at nighttime peak load…….....	A-7
A 5-4B	:	Power flow diagram in 2025 at nighttime peak load (Loading Rate)……..	A-8
A 5-5A	:	Power flow diagram in 2030 at daytime peak load…….	A-9
A 5-5B	:	Power flow diagram in 2030 at daytime peak load (Loading Rate)……	A-10
A 5-6A	:	Power flow diagram in 2030 at nighttime peak load after implementation of equipment measures against load increase factors…….....	A-11
A 5-6B	:	Power flow diagram in 2030 at nighttime peak load (Loading Rate) after implementation of equipment measures against load increase factors……	A-12
A 5-7A	:	Power flow diagram in 2030 at daytime peak load after implementation of equipment measures against load increase factors…….....	A-13
A 5-7B	:	Power flow diagram in 2030 at daytime peak load (Loading Rate) after implementation of equipment measures against load increase factors……	A-14
A 5-8A	:	Power flow diagram in 2030 at daytime peak load Plan A with only reinforcement of two 11 kV transmission lines from East Honiara Substation……..	A-15
A 5-8B	:	Power flow diagram in 2030 at daytime peak load (Loading Rate) Plan A with only reinforcement of two 11 kV transmission lines from East Honiara Substation……	A-16
A 5-9A	:	Power flow diagram in 2030 at daytime peak load Plan A with reinforcement of two 11 kV transmission lines, two 33 kV transformers and one 33 kV transmission line from/at East Honiara Substation…….....	A-17
A 5-9B	:	Power flow diagram in 2030 at daytime peak load (Loading Rate) Plan A with reinforcement of two 11kV transmission lines, two 33 kV transformers and one 33kV transmission line from/at East Honiara Substation……	A-18
A 5-10A	:	Power flow diagram in 2030 at daytime peak load Plan B with only reinforcement of one 11kV transmission line from East Honiara Substation and Lungga Power Station respectively…….	A-19
A 5-10B	:	Power flow diagram in 2030 at daytime peak load (Loading Rate) Plan B With only reinforcement of one 11 kV transmission line from East Honiara Substation and Lungga Power Station respectively……	A-20
A 5-11A	:	Power flow diagram in 2030 at daytime peak load Plan B with reinforcement of one 11 kV transmission line from East Honiara Substation and Lungga Power Station respectively, and one 33 kV transformer at East Honiara Substation….....	A-21

A 5-11B : Power flow diagram in 2030 at daytime peak load (Loading Rate) Plan B with reinforcement of one 11 kV transmission line from East Honiara Substation and Lungga Power Station respectively, and one 33 kV transformer at East Honiara Substation…… A-22
A 5-12A : Power flow diagram in 2030 at nighttime peak load Plan B with reinforcement of one 11 kV transmission line from East Honiara Substation and Lungga Power Station respectively, and one 33 kV transformer at East Honiara Substation…..... A-23
A 5-12B : Power flow diagram in 2030 at nighttime peak load (Loading Rate) Plan B with reinforcement of one 11 kV transmission line from East Honiara Substation and Lungga Power Station respectively, and one 33 kV transformer at East Honiara Substation…… A-24
A 5-13A : Power flow diagram in 2030 at daytime peak load with additional PV 4 MW + BESS plan…… A-25
A 5-13B : Power flow diagram in 2030 at daytime peak load (Loading Rate) with additional PV 4 MW + BESS plan……..... A-26
A 5-14A : Power flow diagram in 2030 at nighttime peak load with additional PV 4 MW + BESS plan…… A-27
A 5-14B : Power flow diagram in 2030 at nighttime peak load (Loading Rate) with additional PV 4 MW + BESS plan……..... A-28
A 5-15A : Power flow diagram in 2030 at daytime peak load in 30% reduction case with additional PV 4 MW+BESS plan……. A-29
A 5-15B : Power flow diagram in 2030 at daytime peak load in 30% reduction case (Loading Rate) with additional PV 4 MW + BESS plan……. A-30
A 5-16A : Power flow diagram in 2030 at daytime peak load in 50% reduction case with additional PV 4 MW + BESS plan……..... A-31
A 5-16B : Power flow diagram in 2030 at daytime peak load in 50% reduction case (Loading Rate) with additional PV 4 MW + BESS plan……. A-32
A 5-17 : 33 kV East Kola - Lungga T/L Contingency Case…….. A-33
A 5-18 : 33 kV East Kola - Lungga T/L Contingency Case With Reinforcement Proposal R1……. A-34
A 5-19 : 66 kV Lungga Transformer Contingency Case…… A-35
A 5-20 : 66 kV Lungga Transformer Contingency Case With Reinforcement Proposal R2 A-36
A 5-21 : 33 kV East Kola Transformer Contingency Case…… A-37
A 5-22 : 33 kV East Kola Transformer Contingency Case With Reinforcement Proposal R3 A-38

Table

Table 1-1 Outline of Relevant Ministries, Agencies and Organizations 1-2
Table 1-2 Main Discussion Points with Other Donors and Organizations 1-3
Table 2-1 Average Electricity Price 2-1
Table 2-2 Meter Reading Customer's Tariff (Revised on January 1, 2020) 2-2
Table 2-3 Electricity Tariff for Cash Power Customers (Revised on January 1, 2020) 2-2
Table 2-4 Maximum Demand and Annual Generation Trend in the Honiara grid 2-3
Table 2-5 GDP Growth Rate History and Projection in Solomon Islands 2-4
Table 2-6 Outline of Existing Power Plants Feeding the Honiara Grid 2-6
Table 2-7 Diesel Generators Operation Records in 2018 2-7
Table 2-8 Monthly Rainfall Records of Honiara and Chupu Karma Rainfall Gauging Stations 2-13
Table 2-9 River Regime at Tina Hydropower Dam Site 2-14
Table 2-10 Outline of Large-scale Solar Farm Development Plan 2-16
Table 2-11 Standby Charge (a case of 4.0 kW solar PV) 2-17
Table 2-12 Required Functions of EMS and Schedule of Introduction 2-20
Table 2-13 Basic Technical Features for Hydro Power Potential in Guadalcanal Island (1) 2-23
Table 2-14 Basic Technical Features for Hydro Power Potential in Guadalcanal Island (2) 2-24
Table 2-15 Estimated Monthly Generation by Komarindi Hydropower 2-27
Table 2-16 Potential Power Generation Cost in Honiara Grid 2-32
Table 3-1 Comparison of Major Battery Features 3-2
Table 3-2 Comparison of Demand Response Resources Candidate in Solomon Islands 3-6
Table 3-3 Introduction of Renewable Energy in Pacific Island Countries 3-7
Table 3-4 Examples of Introduction of Renewable Energy and EMS Technology 3-8
Table 3-5 Example of Introduction of Renewable Energy Utilization System 3-9
Table 3-6 Operation Status Changing in Honiara Grid 3-10
Table 4-1 Existing Power Plants and Power Development Plan 4-3
Table 4-2 Calculation Data and Specifications for Diesel Generation 4-4
Table 4-3 EPC Cost for Munda 1 MW Solar PV Project 4-4
Table 4-4 Cost Prediction for Large-scale PV Project in Solomon Islands (USD/kW) 4-9
Table 4-5 Tina Hydropower Monthly Output 4-9
Table 4-6 Calculation Conditions and Generation Cost for Tina Hydropower 4-10
Table 4-7 Komarindi Hydropower Monthly Output 4-10
Table 4-8 Values of Each Vector with PV Introduction Amount in Algebraic Methods 4-14
Table 4-9 O&M Cost for Power Source Facility 4-15
Table 5-1 Weighted Average Cost of Capital (WACC) 5-11
Table 5-2 Monthly Outputs of Komarindi Hydropower 5-14
Table 5-3 Comparison in Scenarios 5-18
Table 5-4 Impact of changes in demand forecasts and PV development on recommended scenarios 5-20
Table 5-5 Outlook for PV introduction 5-24
Table 5-6 PV development capacity and BESS required amount 5-24

Table 5-7 Impact of changes in BESS capacity on the supply/demand balance (2030) 5-26
Table 5-8 Tentative schedule of the BESS project.....5-35
Table 5-9 Transmission Planning Standard in SP 5-37
Table 5-10 Assumption of Daytime Peak Load of Honiara Grid.....5-37
Table 5-11 Ratio of Daytime Peak Load to Nighttime Peak Load of Honiara Grid 5-38
Table 5-12 Assumption of Nighttime Peak Load of Honiara Grid 5-38
Table 5-13 Generator Output Power (PV capacity based on the current SP's plan).....5-39
Table 5-14 Generator Output Power (Additional PV planning case).....5-40
Table 5-15 Overloaded 11 kV / 0.4 kV Transformers.....5-41
Table 5-16 Overloaded 11 kV Transmission Lines.....5-42
Table 5-17 Unit Costs of Transmission Construction 5-47
Table 5-18 Additional Transmission Cost for Plan A 5-48
Table 5-19 Additional Transmission Cost for Plan B 5-48
Table 5-20 Additional Transmission Cost with Additional PV Plan 5-50
Table 5-21 Additional Transmission Cost for BESS for System Frequency Control in a Short Cycle 5-51
Table 5-22 Proposed N-1 criterion in transmission system planning.....5-52
Table 5-23 Comparison of RERM and N-1 contingency study conditions.....5-53
Table 5-24 N-1 Contingency Study Results (transmission line contingency case).....5-54
Table 5-25 Contingency Study Results (transformer contingency case).....5-55
Table 5-26 Construction cost for N-1 contingency measures 5-59
Table 5-27 Generation Statistics and Non-Technical Losses.....5-61
Table 5-28 Economic Index (Benefit).....5-64
Table 5-29 Economic evaluation of N-1 contingency proposal 5-66
Table 6-1 List of Conditions for Economic and Financial Analysis 6-1
Table 6-2 Profit and Loss Statement 6-2
Table 6-3 Key Management Indicators 6-3
Table 6-4 Electricity Generation and Unit Price 6-3
Table 6-5 Percentage of Generation Costs and Fuel Costs 6-3
Table 6-6 Balance Sheet.....6-4
Table 6-7 Key Management Indicators 6-4
Table 6-8 Financing Results.....6-5
Table 6-9 Financing results 6-6
Table 6-10 Electricity sales (transmission and distribution loss are included) 6-7
Table 6-11 Borrowing Statement 6-7
Table 6-12 IPP participation condition 6-8
Table 7-1 List of References for IPP and PPA.....7-11
Table 7-2 Proposed Risk Allocation (Draft) 7-12
Table 7-3 Major Support Agencies in the Pacific 7-14
Table 7-4 Case Studies of Capacity Building Projects in the Pacific.....7-15
Table 7-5 Example of Planned Training Menu in 2019 for MMERE.....7-17

Table 7-6 Example of Planned Training Menu in 2019 for SP 7-18
Table 7-7 Function of Tonga Electricity Commission 7-25
Table 7-8 Transition of Regulatory Function 7-27
Table 7-9 Support Framework for Renewable Energy Projects of Pacific Country 7-35
Table 7-10 International Organizations and Major Donors Project Mapping 7-36

Figure

Figure 1-1 Overview of the Honiara Grid 1-2
Figure 1-2 Overall Project Schedule 1-4
Figure 2-1 Trend in Maximum Demand and Annual Generation in Honiara Grid 2-4
Figure 2-2 GDP History in Solomon Islands and Annual Generation in Honiara Grid 2-5
Figure 2-3 Population Outlook in Solomon Islands 2-5
Figure 2-4 Photos of Fighter One Solar Farm 2-8
Figure 2-5 Monthly Generation Record in Fighter One Solar Farm 2-8
Figure 2-6 Monthly Capacity Factor Record in Fighter One Solar Farm 2-9
Figure 2-7 Summary of Tina Hydropower Project 2-10
Figure 2-8 Locations of Rainfall Gauging Stations and Tina Hydropower Dam Site 2-12
Figure 2-9 Tina Hydropower Operation Pattern in Dry Season 2-15
Figure 2-10 Large-scale Solar Development Plan in Honiara Grid 2-16
Figure 2-11 Image of EMS Control System in Honiara Grid 2-20
Figure 2-12 Hydro Power Potential Map in Guadalcanal Island 2-22
Figure 2-13 Hydro Power Potential Map around Honiara 2-25
Figure 2-14 Estimated Monthly Generation by Komarindi Hydropower 2-27
Figure 2-15 Maotapuku 1 and Maotapuku 2 Hydropower Sites 2-28
Figure 2-16 Whole Implementation Schedule of Hydropower Projects 2-29
Figure 2-17 Wind Situation around Honiara at 10 Meters in Height above Sea Level 2-31
Figure 3-1 Sample Image of EMS Control Application 3-3
Figure 3-2 Weather Forecasting System (Image) 3-3
Figure 3-3 System Concept of Virtual Synchronous Generator 3-4
Figure 3-4 Concept Image of Microgrid Control by EMS 3-5
Figure 4-1 Estimation of Transmission End Power Demand in Honiara Grid 4-1
Figure 4-2 Peak Demand Forecast 4-2
Figure 4-3 Daily Load Curves in Honiara Grid (October 2018) 4-2
Figure 4-4 Supply and Demand Balance of Present Plan, Base Case in Rainy Season 4-5
Figure 4-5 Supply and Demand Balance of Present Plan, Base Case in Dry Season (Aug. 2030) 4-6
Figure 4-6 Supply and Demand Situation of Present Plan and Base Case (Mar. 2021) 4-6
Figure 4-7 Supply and Demand Situation of Present Plan and Base Case (Mar. 2022) 4-7
Figure 4-8 Cost Reduction Projection for Large-scale Solar PV Installation 4-8
Figure 4-9 Image of Algebraic Method 4-12
Figure 5-1 Supply and Demand Situation in Rainy Season of 2030 (Base Scenario Mar. 2030) 5-3

Figure 5-2 Supply and Demand Situation in Dry Season of 2030 (Base Scenario Aug. 2030) 5-3
Figure 5-3 Supply and Demand Situation in Rainy Season of 2030 (RE 100% Mar. 2030) 5-4
Figure 5-4 Supply and Demand Situation in Dry Season of 2030 (RE 100% Aug. 2030).....5-5
Figure 5-5 Supply and Demand Situation in Rainy Season of 2030 5-6
Figure 5-6 Supply and Demand Situation in Dry Season of 2030 5-7
Figure 5-7 Supply and Demand Situation in Dry Season of 2040 5-8
Figure 5-8 Small and medium PV introduction case (March, 2023).....5-9
Figure 5-9 Small and medium PV introduction case (October, 2023) 5-10
Figure 5-10 Comparison of surplus output in the case of introducing small.....5-10
Figure 5-11 Impact of small and medium-sized PV on generation costs 5-11
Figure 5-12 Supply and Demand Situation in Rainy Season of 2030 5-13
Figure 5-13 Supply and Demand Situation in Dry Season of 2030 (4%/year growth Oct. 2030).....5-13
Figure 5-14 Supply and Demand Situation in Rainy Season of 2030 5-15
Figure 5-15 Supply and Demand Situation in Dry Season of 2030 5-15
Figure 5-16 Supply and Demand Situation in Rainy Season of 2030 5-16
Figure 5-17 Supply and Demand Situation in Dry Season of 2030 5-16
Figure 5-18 Transition of Renewable Energy Share and Installed Capacity.....5-19
Figure 5-19 Peak demand forecast (MW) 5-19
Figure 5-20 Demand forecast (GWh).....5-20
Figure 5-21 Impact on the 2025 dry season (October 2025).....5-21
Figure 5-22 Impact on the rainy season of 2025 (March 2025) 5-21
Figure 5-23 Impact on the rainy season of 2025 (November 2025).....5-22
Figure 5-24 Supply/demand balancing in Dry season of 2030 (Aug. 2030).....5-23
Figure 5-25 Actual measurement result of cycle life of storage battery module.....5-25
Figure 5-26 BESS connection image for long-period fluctuation control (peak shift) 5-27
Figure 5-27 EMS of the control object.....5-28
Figure 5-28 Supply/demand balance of Rainy season in 2030 (Mar. 2030) 5-29
Figure 5-29 Single-line diagram of BESS for short cycle fluctuation control 5-30
Figure 5-30 Layout of BESS units 5-31
Figure 5-31 BESS unit and 11kV switchgear / station use equipment layout design 5-32
Figure 5-32 Layout plan of EMS 5-33
Figure 5-33 Honiara Power System around 2030 5-36
Figure 5-34 Power flow diagram in 2030 at daytime peak load 5-42
Figure 5-35 Power Flow Diagram in 2030 at Daytime Peak Load 5-43
Figure 5-36 Power Flow Diagram in 2030 at Daytime Peak Load 5-44
Figure 5-37 Power Flow Diagram in 2030 at Daytime Peak Load 5-45
Figure 5-38 Power Flow Diagram in 2030 at Daytime Peak Load 5-46
Figure 5-39 Proposal R1 of countermeasures for 33 kV East Kola - Lungga transmission contingency case 5-56
Figure 5-40 Proposal R2 of countermeasures for 66 kV Lungga transformer contingency case 5-57

Figure 5-41 Proposal R3 of countermeasures 5-58
Figure 5-42 Outline of N-1 contingency measures 5-60
Figure 5-43 Example of Low voltage (415 V) transmission loss reduction measures 5-63
Figure 7-1 1.1 MW Rooftop Solar PV in Suva 7-2
Figure 7-2 Standardized Power Purchase Agreement in Fiji 7-3
Figure 7-3 Proposed Framework for Mini-grid Promotion in PNG 7-5
Figure 7-4 Strategic Concept for Solving Land Acquisition Issues 7-8
Figure 7-5 Benefit and Drawback of Third Party Ownership Model 7-9
Figure 7-6 Third Party Ownership Models in Japan 7-10
Figure 7-7 MMERE Organization Chart 7-16
Figure 7-8 Overview of the Selwyn College - Hybrid Project Site 7-20
Figure 7-9 Diploma Course at SINU 7-21
Figure 7-10 South African Power Sector Organizational Structure 7-22
Figure 7-11 Proposal of the IPP Office (Tentative Name) Organization 7-23
Figure 7-12 Overview of Benefit and Drawback of Regulatory Pattern 7-24
Figure 7-13 Organizational Chart of Electricity Commission 7-25
Figure 7-14 Advantage and Disadvantage of Multi-sectoral Regulator 7-27
Figure 7-15 Organizational Chart of the Fijian Competition and Consumer Commission 7-28
Figure 7-16 Organizational Chart of the Office of Regulator 7-29
Figure 7-17 Organizational Chart of Utilities Regulatory Authority 7-30
Figure 7-18 Organizational Chart of Telecommunication Commission of Solomon Islands 7-31
Figure 7-19 Sector Reform Steps with Multi-sectoral Regulator 7-32
Figure 7-20 Proposed Organizational Chart of Multi-sectoral Regulator (2nd stage) 7-33
Figure 7-21 Proposed Organizational Chart of Multi-sectoral Regulator (3rd stage) 7-33
Figure 7-22 Aid Trends for the Pacific by International Organizations and Major Donors (2015) 7-34
Figure 7-23 Recommended Non-Fuel Tariffs by Segment (target targiff) 7-39
Figure 7-24 Recommended average non-fuel tariffs vs current average non-fuel tariffs – target scenario7-39
Figure 7-25 Proposed transition from current tariff to transition tariff structure 7-41
Figure 7-26 Recommended average non-fuel tariffs vs current average non-fuel tariffs – transition scenario 7-42
Figure 8-1 Outline of Renewable Energy Road Map for Honiara Grid (Draft) 8-2

Abbreviation

AC	:	Alternating Current
ADB	:	Asian Development Bank
AFC	:	Automatic Frequency Control
AIFFP	:	Australian Infrastructure Financing Facility for the Pacific
AMI	:	Advanced Metering Infrastructure
APTC	:	Australian Pacific Training Coalition
AUD	:	Australian Dollar
AusAID	:	Australian Agency for International Development
BaU	:	Business as Usual
BESS	:	Battery Energy Storage System
B/S	:	Balance sheet
CA	:	Catchment Area
CAPEX	:	Capital expenditure
CIF	:	Climate Investment Funds
CBSI	:	Central Bank of Solomon Islands
COD	:	Commercial Operation Date
CRIEPI	:	Central Research Institute of Electric Power Industry
CTCN	:	Climate Technology Center Network
DBSA	:	Development Bank of SA
DC	:	Direct Current
DFAT	:	Department of Foreign Affairs and Trade (in Australia)
DFR	:	Draft Final Report
DG	:	Diesel Generator
D/L	:	Distribution line
DOE	:	Department of Energy
DP	:	Development Partners
DPE	:	Department of Petroleum & Energy
DR	:	Demand Response
EAC	:	Energy Advisory Committee
ECC	:	Electricity Concession Contract
EDC	:	Economic Dispatching Control
EFL	:	Energy Fiji Limited
EIA		Environmental Impact Assessment
EMS	:	Energy Management System
EOI	:	Expression of Interest
EPC	:	Engineering, Procurement and Construction
EPC	:	Electricity Power Corporation
ERU	:	Economic Reform Unit
EU	:	European Union

EV	:	Electric Vehicle
FCCC	:	Fijian Competition and Consumer Commission
FEA	:	Fijian Energy Authority
FIT	:	Feed-in Tariff
FR	:	Final Report
FREPP	:	Fiji Renewable Energy Power Project
F/S	:	Feasibility Study
GCF	:	Green Climate Fund
GDP	:	Gross Domestic Product
GEC	:	Global Environment Center
GEF	:	Global Environment Facility
GHG	:	Greenhouse Gas
GIS	:	Geographic Information System
GIZ	:	German Agency for International Cooperation
GOJ	:	Government of Japan
GSES	:	Global Sustainable Energy Solution
GWh	:	Gigawatt hour
G2V	:	Grid-to-Vehicle
HR	:	Human Resource
ICC	:	International Chamber of Commerce
ICCC	:	Independent Consumer Competition Commission
IC/R	:	Inception Report
ICSI	:	Investment Corporation of the Solomon Islands
ICT	:	Information and Communication Technology
IFC	:	International Finance Cooperation
IOM	:	International Organization for Migration
IT/R	:	Interim Report
IPP	:	Independent Power Producer
IRENA	:	International Renewable Energy Agency
IUCN	:	International Union for Conservation of Nature
JCM	:	Joint Crediting Mechanism
JICA	:	Japan International Cooperation Agency
KW	:	Korean Water
kW	:	Kilowatt
kWh	:	Kilowatt hour
kWp	:	Kilowatt Peak
LALRP	:	Land Acquisition and Livelihood Restoration Plan
LCOE	:	Levelized Cost of Electricity
LDB	:	Long Duration Battery
LFC	:	Load Frequency Control

MCA	:	Ministry of communication and Aviation
MCILI	:	Ministry of Commerce, Industry, Labor and Immigration
MDPAC	:	Ministry of Development Planning and Aid Coordination
MECC	:	Ministry of Environment, Climate Change, and Disaster Management and Metrology
MEHRD	:	Ministry of Education and Human Resources Development
MFT	:	Ministry of Finance and Treasury
MID	:	Ministry of Infrastructure Development
MIGA	:	Multilateral Investment Guarantee Agency
MLHS	:	Ministry of Lands, Housing & Survey
MMERE	:	Ministry of Mines, Energy and Rural Electrification
MNPDC	:	Ministry of National Planning and Development Coordination
MP	:	Master Plan
MVA	:	Megavolt Ampere
MW	:	Megawatt
NDC	:	Nationally Determined Contributions
NEDO	:	New Energy and Industrial Technology Development Organization
NEROP	:	National Electrification Rollout Plan
NERSA	:	South African Power Regulatory Authority
NEXI	:	Nippon Export and Investment Insurance
NPF	:	National Provident Fund
NZ	:	New Zealand
O&M	:	Operation & Maintenance
ODA	:	Official Development Assistance
OGEA	:	Off-Grid Electrification Authority
OOTR	:	Office of the Regulator
OPMC	:	Office of the Prime Minister and Cabinet
PCS	:	Power Conditioning System
PEC	:	Pacific Environmental Community Fund
PIGGAREP	:	Pacific Islands Greenhouse Gas Abatement through Renewable Energy Project
PLT	:	Pacific Linesmen Training
PMO	:	Project Management Office
PNG	:	Papua New Guinea
PPA	:	Power Purchase Agreement
PPA	:	Pacific Power Association
PPL	:	PNG Power Limited
PPP	:	Public Private Partnership
PPUC	:	Palau Public Utilities Corporation
PREP	:	Pacific Renewable Energy Program
PRIF	:	Pacific Regional Infrastructure Facility

PSOD	:	Private Sector Development Operation Department
PV	:	Photovoltaics
R/D	:	Record of Discussions
RE	:	Renewable Energy
REIPPP	:	Renewable Energy Independent Power Producer Procurement
RERM	:	Renewable Energy Road Map
RESIP	:	Renewable Energy Strategy and Investment Plan
SBD	:	Solomon Islands Dollar
SDB	:	Short Duration Battery
SH	:	Solomon Housing
SI	:	Solomon Islands
SICAP	:	Solomon Islands Climate Change Assistance Program
SICCC	:	Solomon Islands Consumer and Competition Commission
SICCI	:	Solomon Islands Chamber of Commerce and Industry
SIEAREEP	:	Solomon Islands Electricity Access and Renewable Energy Expansion Project
SIG	:	Solomon Islands Government
SINU	:	Solomon Islands National University
SIPF	:	Solomon Islands Provident Funds
SM	:	Smart Meter
SOC	:	State of Charge
SOE	:	State-owned Enterprise
SP	:	Solomon Power
SPC	:	Secretariat of the Pacific Community
STL	:	Solomon Telekom Limited
T&D	:	Transmission and Distribution
TCSI	:	Telecommunication Commission of Solomon Islands
TEC	:	Tonga Electricity Commission
T/L	:	Transmission line
TLTB	:	iTaukei Land Trust Board
TPL	:	Tonga Power limited
TPO	:	Third Party Ownership
TWG	:	Technical Working Group
UAE	:	United Arab Emirates
UFR	:	Under Frequency Relay
UNDP	:	United Nations Development Programme
UNELCO	:	Union Electrique du Vanuatu Limited
UNFCC	:	United Nations Framework Convention on Climate. Change
UNIDO	:	United Nations Industrial Development Organization
URA	:	Utility Regulatory Authority
USAID	:	United States Agency for International Development

USc	:	United States Cents
USD	:	United States Dollar
VAT	:	Value Added Tax
VPP	:	Virtual Power Plant
VRE	:	Variable Renewable Energy
VSG	:	Virtual Synchronous Generator
V2G	:	Vehicle-to-Grid
VUI	:	Vanuatu Utilities and Infrastructure Limited
WB	:	World Bank

Executive Summary

The purpose of this project is to draft a roadmap for promoting the introduction of renewable energy into the Honiara grid in Solomon Islands (SI), based on the results from the study "Data Collection Survey on the Promotion of Renewable Energy in Solomon Islands", which was conducted between November 2018 and March 2019.

1. Basic Policy in Power Sector

1-1 Outline of Basic Power Policy

SI is an island nation in the south Pacific and is susceptible to sea-level rise caused by global warming. Thus, tackling climate change is an urgent and top priority. Under these circumstances, the Ministry of Mines, Energy and Rural Electrification (MMERE) and Solomon Power (SP) are promoting the introduction of renewable energy in the power sector.

Specifically, MMERE has set the national renewable energy ratio for power generation in the Renewable Energy Strategy and Investment Plan (RESIP) to RE100% by 2050. More ambitiously, SP has set a target of 100% renewable energy by 2030.

1-2 Electricity Tariff

Nearly all electricity in SI is currently generated by diesel using imported fuel. For this reason, the power generation cost is susceptible to international market prices and transportation costs. To ensure financial sustainability over the longer term, SP applies an extremely high electricity tariff, and the cost of electricity is one of the highest globally.

Average Electricity Price

	2019	2020
Sales Electricity (kWh)	68,781,681	68,571,174
Revenue（million SBD）	480.46	452.55
Average Electricity Price（SBD/kWh）	7.0	6.6
Average Electricity Price（USc/kWh ）[1]	87.6	82.7

Source: JICA Project Team based on SP data

2. Current Situation and Challenges of Power Sector in Honiara Grid

2-1 Power Demand

As of 2019, SP had 19,000 customers connected to the Honiara grid. In 2018 annual power generation reached 85.115 GWh and maximum demand marked 16 MW.

2-2 Existing Power Supply Facility

The main source of energy in the Honiara grid currently comes from diesel generators using imported fuel, which is a major factor resulting in the high electricity tariff in SI. The table below outlines the existing power supply facilities feeding the Honiara grid.

[1] Apply: 1SBD = 0.12535USD (as of April 13, 2021)

Outline of Existing Power Plants Feeding the Honiara Grid

Name of Power Plant		COD	Category	Install Capacity (MW)	Available Capacity (MW)	Starting Time (min)	Expected Decommission Year
Lungga	L1	2016	Diesel	2.5	2.5	1	2039
	L2	2016	Diesel	2.5	2.5	1	2039
	L3	2016	Diesel	2.5	2.5	1	2039
	L4	2016	Diesel	2.5	2.5	1	2039
	L6	1998	Diesel	2.9	2.2	1	2024
	L7	2005	Diesel	4.2	3.8	1	2036
	L8	1993	Diesel	4.2	3	1	2024
	L9	1999	Diesel	4.2	3.8	10	2029
	L10	2006	Diesel	4.2	3.8	10	2036
Honiara	H1	2013	Diesel	1.5	1.5	3	2038
	H2	2013	Diesel	1.5	1.5	3	2027
Fighter One		2016	PV	1.0	1.0	-	2026
Ranadi			PV	0.05	0.05	-	-
TOTAL				33.75	30.65		

Source: Prepared by JICA Project Team based on SP document

2-3 Power Development Plan

The table below shows the existing power plants and their projected life span.

Existing Power Plants and Projected Life Spans

Sites	Unit	Type of Generator	Capacity (MW)	COD/Decommission
Ranadi	-	PV	0.05	2014 / 2039
Henderson Extension	-	PV	2	2020 / 2045
Ranadi Rooftop	-	PV	0.22	2020 / 2045
Tanagai	-	PV	1	2021 / 2046
Foxwood	-	PV	4	2022 / 2027
Lungga SDA	-	PV	4	2022 / 2027
Tenaru	-	PV	4	2022 / 2027
Tasahe	-	PV	2	2023* / 2048*
Makira	-	PV	3	2024* / 2049*
Tina	3	Hydro	15	2024 / 2084*
				* as assumption

Source: JICA Project Team based on SP information

2-4 Power Development Potential

SP's future power development plans currently only include solar power, except for the Tina River Hydropower Plant. In boosting the renewable energy share in the grid, a large-scale Battery Energy Storage System (BESS) would be required if solar-only development were to be promoted. In addition, large-scale solar power requires appropriate and sufficient land, but land acquisition in the past has been a significant barrier to private and public sector investments in SI. Thus, one could infer that developing renewable power sources other than solar power would be more desirable. This section describes the potential of developing biomass, wind and geothermal energy as well as hydro power excluding the Tina River Hydropower Plant.

The introduction of small and medium scale Photovoltaics (PVs), which do not require large areas of

land (as well as the conditions for the promotion of small and medium scale PVs, such as i) the removal of standby-charge; ii) the establishment of power sales systems; iii) the establishment of grid interconnection technical requirements; and iv) further consideration of business models), are discussed in another chapter.

① Hydropower

There are four (4) potential hydropower sites at Lungga Dam (20.3 MW), Komarindi (6.6 MW), Maotapuku 1 (1.6 MW) and Maotapuku 2 (1.4 MW). These sites could be host to candidate hydropower projects which would be able to supply electricity to the Honiara grid.

② Wind Power

Since wind speeds around the northern central part of Guadalcanal Island average around 2.50 m/s inland and 5.0 m/s offshore, wind-generated power is not expected to be a promising renewable power resource.

③ Biomass Power

Since large land areas are necessary for sustainable wood biomass power generation, given the prevailing land issues, it is assumed that wood biomass power generation would be difficult. Power generation utilizing oil palm residue has already been realized in Guadalcanal, but its scale is too small to supply electricity to the grid. Therefore, in the short term, power generation utilizing oil palm residue is not a promising power source. However, if palm oil production were to increase in the future, power generation utilizing oil palm residue could possibly supply electricity to the Honiara grid.

④ Geothermal Power

No geothermal potential has so far been identified on Guadalcanal Island, where the Honiara grid is located. Studies have shown that Savo Island, which is approximately 60 km away from Honiara, has a geothermal potential of about 11 MW. However, that would imply approximately 60 km of submarine cable would need to be laid to connect to the Honiara grid. A feasibility study for the geothermal power of Savo Island has not been conducted to date, and its economic and technical feasibility is unknown. Therefore, geothermal power generation is not considered in this study.

2-5 Challenges for RE 100% Supply

① Securing Spinning Reserve Capacity

If 25.27MW of PV were to be introduced into the Honiara grid by 2030 as per SP's original plan, there is a high possibility that PV output would exceed the projected power demand during off-peak daytime hours. With the introduction of PV, there would be no need for DG (Diesel Generator) power during off-peak hours. It is expected that there would be no demand for DG when RE100% is achieved, excluding for backup. Hydropower is assumed to run out of automatic frequency control (AFC) reserves in the dry season. For this reason, a BESS introduced to the Honiara grid equipped with a virtual synchronous generator (VSG) function, would ensure stable operations during the dry season.

② Supply Capacity Development in Dry Season

With prospective power development currently planned by SP for hydropower of 15 MW and PV of 21 MW, the amount of power generated from renewable power sources is currently insufficient to achieve RE 100%.

3. Study on Enabling Technology for Renewable Energy

Operations of the Honiara grid will change significantly due to the growth of electric power demand, the amount of installed PV, and the development of the Tina River Hydropower Plant (assumptions based on SP's development plan). In response to this change, it is necessary to introduce system stabilization technology.

Operation Status Changing in Honiara Grid

Year	PV (MW)	Changes of Honiara grid operation status
- 2024	4.27	・ DG supplies energy and ancillary services
2025 -	7.27	・ PV output forecast, Charge/discharge control of BESS(SOC), VSG
2030 -	25.27	・ EDC (formulation of supply and demand plan considering the seasonal operation of HPP / DG / PV / BESS)

Source: JICA Project Team

4. Supply and Demand Situation based on Existing Power Development Plan

Based on the demand forecast (base case) the power generation development plan (see Table 4 1), and fuel cost specifications for diesel power generation, supply and demand equivalence is simulated as per below.

The supply and demand balancing simulation has been calculated using PDPAT-II, which has been used by TEPCO for more than 40 years.

(1) Present plan, supply and demand balance situation in 2030 in the demand-based case

The figure below shows projected power supply and demand during the rainy season of March 2030. From the results of the supply and demand simulation, it is estimated that PV output exceeds demand during the daytime. In this case, some measures such as suppressing the output of PV or introducing a BESS with a virtual synchronous generator (VSG) function are required. Due to its characteristics, power operations cannot be maintained with PV alone. In order to operate with only PV supply, it is necessary to prepare a spinning reserve that absorbs the combined fluctuation of PV output and power demand of the system. However, when only PV is supplied, the outputs control cannot be performed instantaneously, so that it is not possible to secure a spinning reserve. Also, if the PV is connected by an inexpensive separated-exciting PCS, operations cannot be continued when the system voltage drops during a system failure. When PV power is disconnected from the grid, the fault current is not provided, so the system protection relay does not operate and the fault point is not removed. In this case, it would be necessary to introduce a BESS with VSG function. Therefore, it is necessary to analyze the supply and demand situation during the off-peak period after 2022 when it is expected that a large amount of PV is installed, and to consider countermeasures. On the other hand, if a BESS is not introduced, even in the rainy season, the supply capacity will be insufficient at the night peak, and supply by diesel power generation would be necessary.

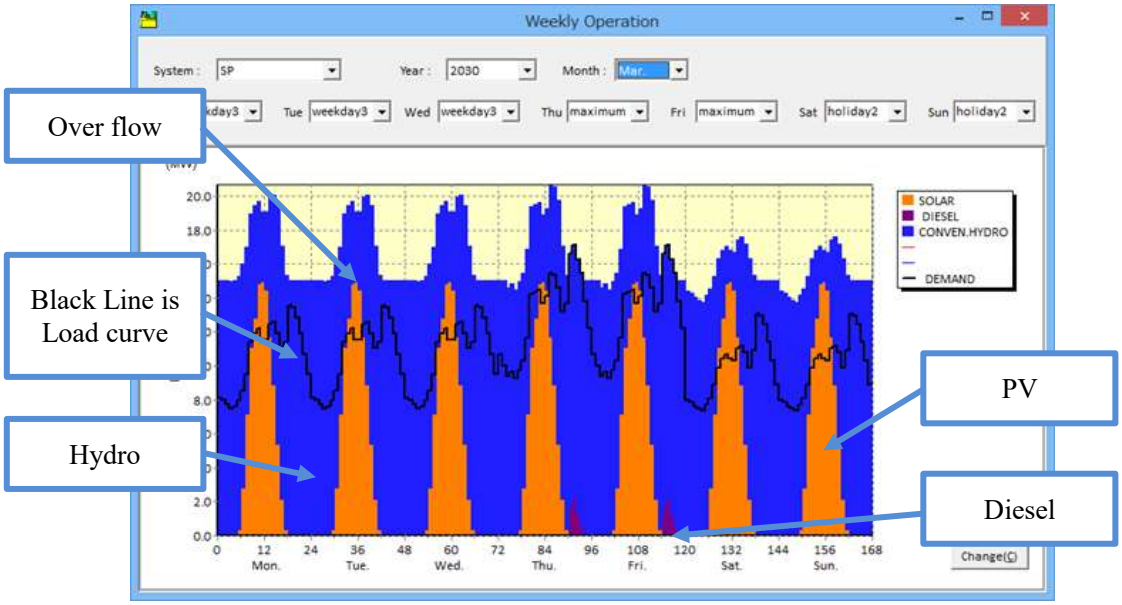

Source: JICA Project Team

Supply and Demand Balance of Present Plan, Base Case in Rainy Season (Mar. 2030)

The figure below shows projected power supply and demand during the dry season of 2030 (August). During the dry season, Tina River's hydro output decreases, resulting in a shortage of RE supply at night. In 2030, it is estimated that about 16 GWh of electricity will be supplied annually by diesel power generation. It can be seen that in order to achieve RE 100% supply, it is necessary to develop an additional 16 GWh of RE by 2030. The capacity factor for diesel power generation is estimated at 13.2%, and the fuel cost for power generation costs is estimated at USc 26.7/kWh.

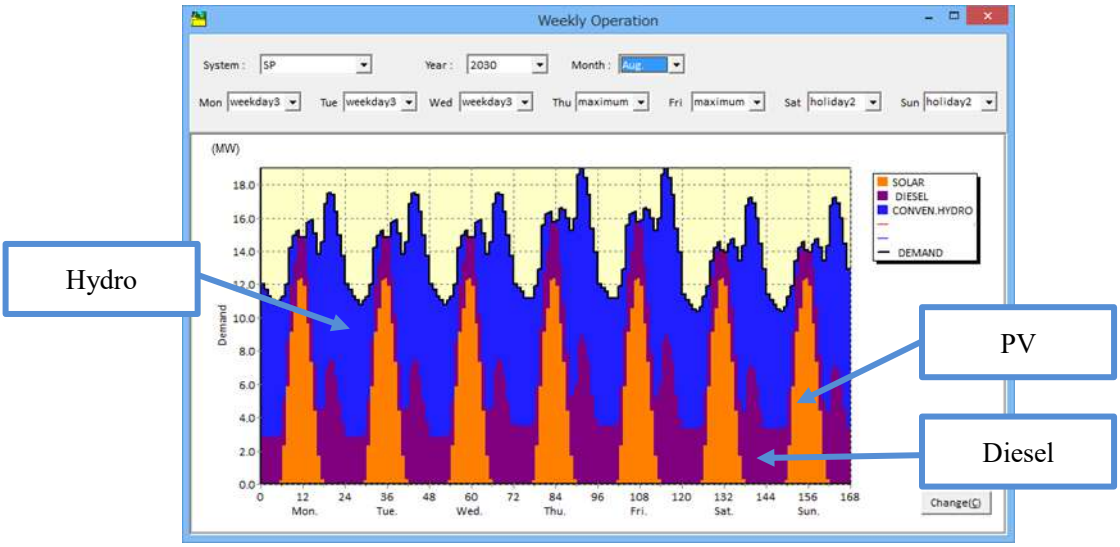

Source: JICA Project Team

Supply and Demand Balance of Present Plan, Base Case in Dry Season (Aug. 2030)

5. Study of Feasible Renewable Energy 100% Supply Scenario in Honiara Grid

It is expected that RE 100% supply will be available during the off-peak rainy season in 2030. However, RE's supply capacity is insufficient, especially during nighttime peaks during the dry season. Therefore, in order to achieve RE 100% supply, it is necessary to develop RE to supply power even at night in the dry season in addition to the present plan. The only REs that can be developed in

SI are currently PV and hydropower. In addition, the development of additional power sources such as hydropower and biomass are not expected to be introduced in time by 2030. Therefore, the peak shift with PV + BESS was examined.

5-1 Selection of RE Development Scenarios

The following RE development scenarios for 2030 and issues for RE 100% supply and recommended scenarios are proposed for consideration.

(a) Scenario 1: Base scenario:
2%/year growth in demand, Present Plan (PP) + BESS (4MW/2MWh)
(b) Scenario 2: RE100% (PV+BESS) in 2030
2%/year growth in demand, to RE100% with PP+PV+BESS in 2030
(c) Scenario 3: RE100% in Rainy season scenario (Recommended scenario):
2%/year growth in demand with PP+PV+BESS in a generation cost USc 32/kWh or less
(d) Scenario 4: RE100% (PV+BESS) in 2040 scenario:
2%/year growth in demand, to RE100% with PP+PV+BESS in 2040

In addition, the following scenarios were analyzed as part of a sensitivity analysis for the recommended scenario 3.

(e) Scenario 5: Demand high case:
4%/year growth in demand, RE80%, PP+PV+BESS
(f) Scenario 6: PV+BESS construction cost status quo case:
2%/year growth in demand, RE88%, PP+PV+BESS, no construction cast reduction in PV+BESS
(g) Scenario 7: New HPP (base case):
2%/year growth in demand for the recommended scenarios with a new hydropower plant
(h) Scenario 8: New HPP (high case):
4%/year growth in demand for the recommended scenarios with a new hydropower plant

5-2 Recommended Renewable Energy 100% Scenario

Based on the studies so far, PV and the Tina River Hydropower Plant are currently the only renewable energy resources that can feasibly be developed by 2030. The development of hydropower and biomass following Tina by 2030 is difficult due the long lead up time for hydropower development, including a potential site survey. In addition, it will be necessary to secure the planned land for PV and to deal with the load given to the system by the charging current from PV. In particular, it will be necessary to study the system configuration based on the proper installation position of PV for peak shift and BESS. It will also be necessary to prepare the infrastructure (independent operation prevention, autonomous operation, voltage maintenance, VSG, etc.) necessary for grid interconnection of PV and BESS.

On the other hand, it would also be considered possible to replace diesel power generation with new hydropower sites and biomass (palm husks). After conducting these feasibility studies, it is recommended to consider the annual 100% renewable energy supply scenario.

Considering the potential of renewable energy in the Honiara system at present, by 2030, the required specifications of PV + BESS and the technical requirements of grid interconnection will be summarized, and the peak shift by PV + BESS will be realized. At the same time, it we evaluate the feasibility of hydropower generation and biomass to gradually achieve the most economical 100% renewable energy scenario. In order to implement 100% RE supply with PV + BESS, a PV of 45 MW would be required. However, SP noted it would be difficult to develop 45 MW by 2030.

Therefore, to introduce renewable energy by 2030, the scenario of 100% renewable energy supply during the rainy season (scenario 3) by PV + BESS is recommended. An alternative scenario assumes PV + BESS will be developed continuously to achieve 100% RE supply by 2040 (scenario 4). This shift the target of 100% RE supply by 2030 in the SP Honiara system by 10 years in light of the development potential of renewable energy.

Between 2030 to 2040, to reach an additional 40.7 MW of PV and supply 100% of renewable energy with PV + BESS, this would require a 4 MW/year pace increase in output capacity, including 5 MW of small- and medium-scale PVs such as roof-top type, and additional BESS (4 MW / 2 MWh for spinning reserve and 12 MW / 72 MWh for peak shift) as shown in Scenario 4. For reference, the transition of an increasing renewable supply share and supply equipment composition in Scenarios 3 and 4 is shown in the figure below.

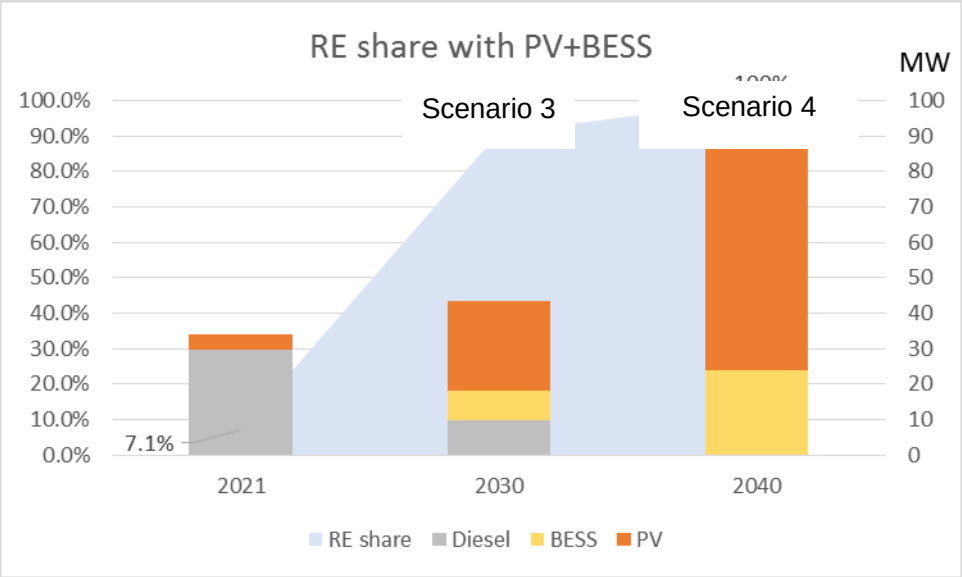

5-3 Power System Planning

The main system of the current Honiara grid is currently configured such that six substations (two of which have a main power plant) are connected with 33 kV transmission lines. In the future, a 66 kV system will be introduced along with the development of the Tina River Hydropower plant (15 MW).

The power generated at the Tina River Hydropower Plant will be transmitted to the newly constructed Tanagai Substation and the existing Lungga Substation on the west side via a new 66 kV transmission line. The following figure shows the Honiara power system around 2030.

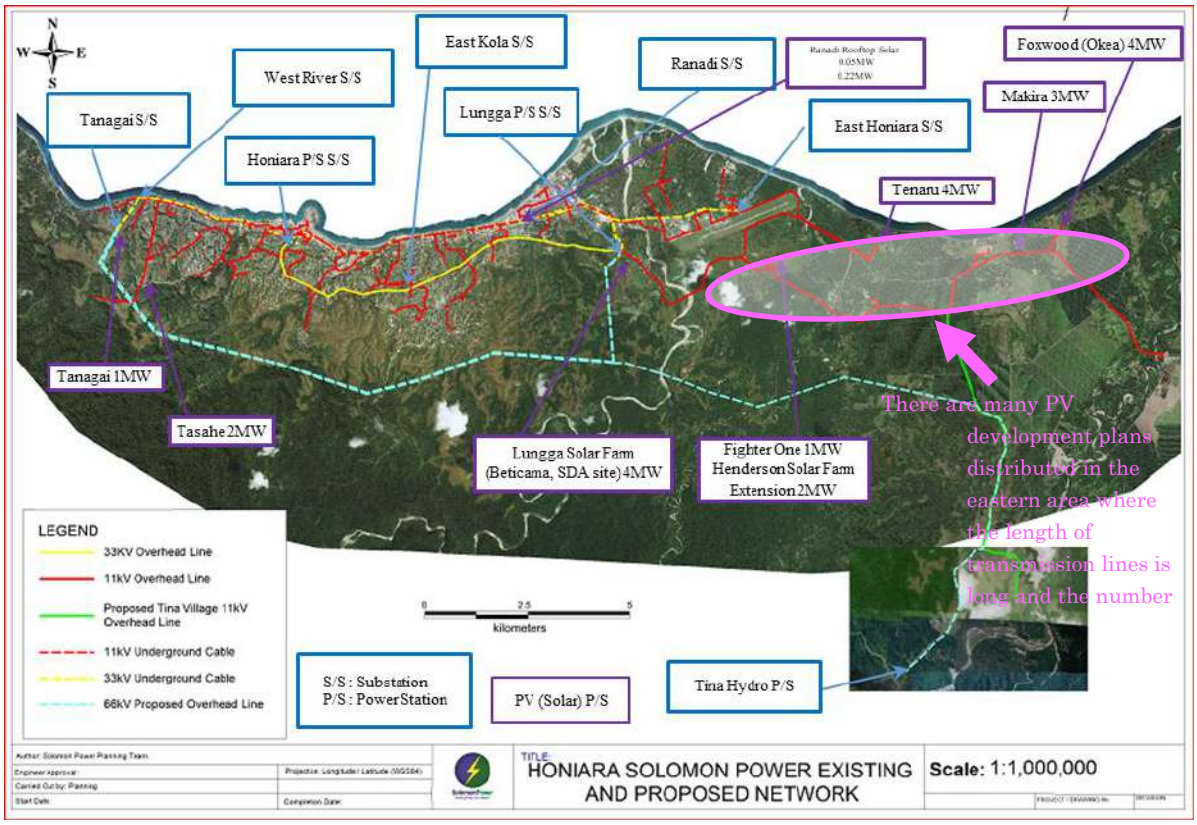

Source: Created by JICA Project Team based on materials provided by SP

Honiara Power System around 2030

The planning criteria in the SP are shown in the following table.

Transmission Planning Standard in SP

Item	Reference
System Frequency Variation	Normal operation:50 Hz ± 2% Emergency operation: 50 Hz ± 4%, and never without ± 3% limits for more than 0.5 second.
System Voltage Variation	Normal operation : ± 7% Emergency operation: ± 10%
Security (Contingency)	N-0 criterion is only applied. N-1 criterion is not applied.

N-0: All of transmission lines and grid transformers are in healthy condition.
N-1: Single circuit or grid transformer is out-of-service due to accident.

Source: Created by JICA Project Team based on materials provided by SP

5-4 Power System Analysis

(1) Software for Analysis

The Project Team had initially planned to check the results of power system analysis conducted by SP using the software package *PowerFactory*.

The Project Team ended up using the software package *PSS/E* (produced by Siemens) which is commonly used for power system analysis globally.

(2) Study Items

The study items are determined as below in the discussion with SP during the first work:

- Power Flow;
- and Voltage Analysis.

(3) Target Years of Study

The target years of the analysis are 2020, 2025 and 2030 which were determined in the discussion with SP during the first visit.

(4) Time Zones

Taking solar power generation into consideration, time zones were determined as below in the discussion with SP during the 1st visit:

- Daytime peak; and
- Nighttime peak.

In addition, the daytime peak load was subdivided into weekends (when demand is lower) and weekdays (when demand is higher).

(5) Study Results

Since the transmission line will be overloaded in the eastern part where PV development is concentrated, countermeasures are required. The study team presents two countermeasures and recommend a cost-effective plan (Plan B). The system diagram before and after the countermeasure is shown on the next page.

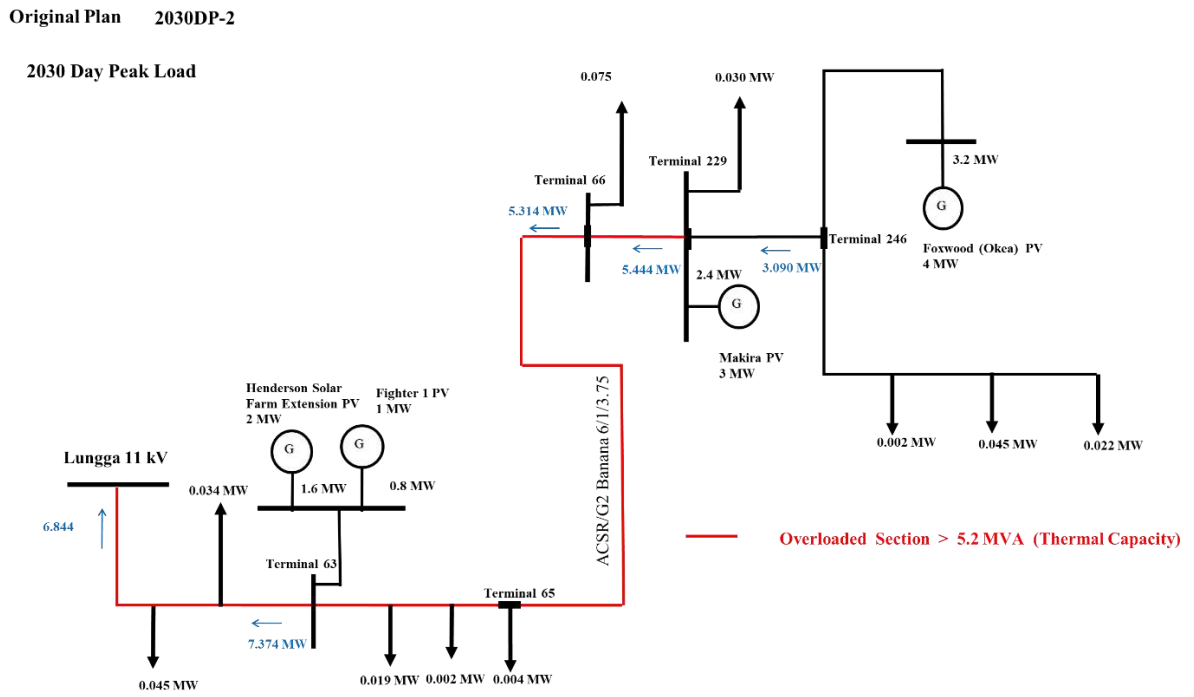

Source: JICA Project Team

Power flow diagram in 2030 at daytime peak load (Original plan)

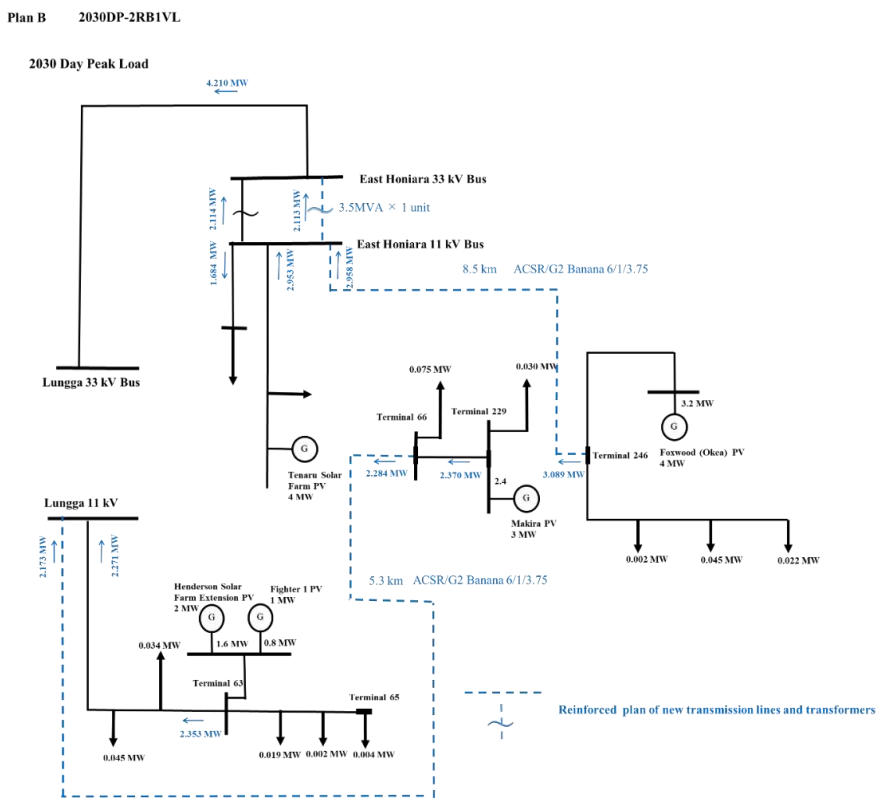

Source: JICA Project Team

Power Flow Diagram in 2030 at Daytime Peak Load (Plan B)

5-5 Proposal for introduction of the N-1 criterion in transmission system planning

The N-0 criterion is applied to the SP transmission planning standard. In future, it will be necessary to apply the N-1 criterion, which will not cause power outages or overload of remaining equipment even in the case of a single equipment accident. Below, the proposal to introduce the N-1 criterion for the 66 kV and 33 kV systems, (which are the main systems) is outlined. As the N-1 standard is introduced, it will be important to start with a system that supplies the most important facilities and customers.

(1) N-1 contingency study results

Three cases that did not meet the N-1 standard were found, and it became clear that countermeasures are required. The works proposed as countermeasures were named R1, R2, and R3. The total construction cost is 6,230 thousand SBD.

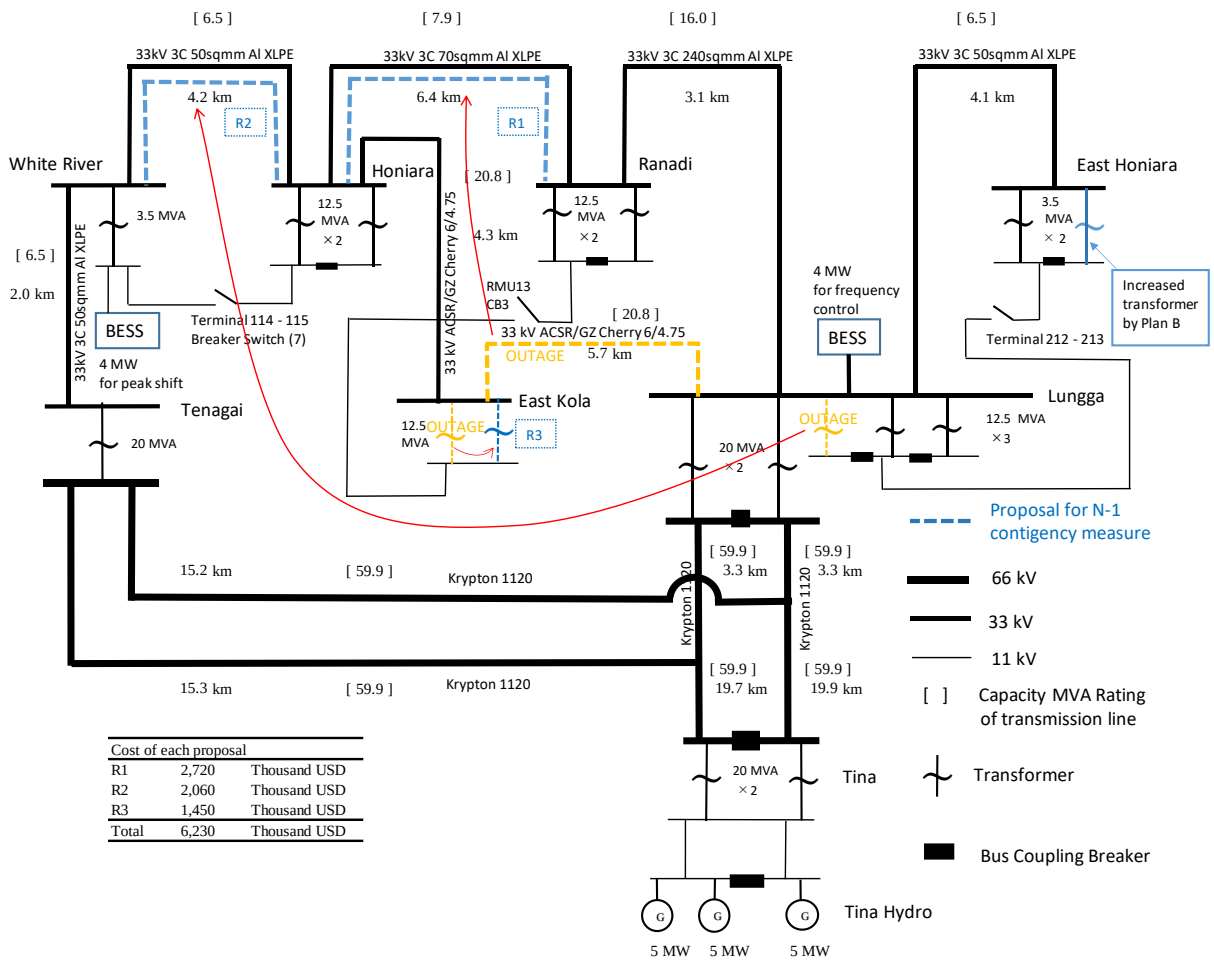

Cost of each proposal		
R1	2,720	Thousand USD
R2	2,060	Thousand USD
R3	1,450	Thousand USD
Total	6,230	Thousand USD

Source: JICA Project Team

Proposals for 66 kV and 33 kV Reinforcement based on N-1 Criterion

5-6 Transmission System Losses

(1) Outline of transmission system losses

The technical loss (transmission and distribution) in the Honiara system in 2018 was 11%. According to the system calculation simulating 11 kV or more (including the 11 kV / 0.4 kV transformer), the transmission loss is 750 kW at the peak in 2020, which is about 4% of the power at the transmission end of the power plant. The annual average is estimated at less than about 2%. Thus, there is little room for further reducing transmission loss in the high-voltage system, and even if reduction measures were implemented, the effect would be exceedingly small and not economically viable.

The remaining 9% of transmission loss is low voltage (415 V), but in reality, it is considered that non-technical loss (electricity theft) is still included in this 9%. As a matter of fact, the low voltage (415 V) technical loss is difficult to estimate by calculation, so it is difficult and unclear to distinguish between non-technical loss and technical loss.

(2) Examination of reduction of transmission and distribution power loss (transmission loss)

In this study, the methodology for reducing the technical loss of the low voltage (415 V) system is illustrated and examined.

It is also shown that the effectiveness of loss reduction measures can be evaluated by setting specific economic indicators. A concrete calculation of the economic index shows that the construction kW unit price of countermeasures that could reduce the loss of 1 kW at peak hours must be lower than SI$132,322.

In the low-voltage system, there are many places that satisfy this economic indicator. Therefore, it would be effective to find a place that satisfies the economic index and take measures in order from the highest load factor of the 11 kV / 0.4 kV transformer or the longest trunk line length of the 415 kV distribution line.

The study team calculated the N-1 proposal (reducing transmission loss at high voltage), but as expected, it was deemed economically inefficient.

The following are examples of JICA's studies on reducing transmission loss in the past. In each case, the target system is mainly medium voltage (MV) and low voltage (LV), where an economic index is set and countermeasures are planned.

- ✓ The Feasibility Study on the Loss Reduction Project of Distribution Network in the Hashemite Kingdom of Jordan, 2000
- ✓ Data Collection Survey on Transmission and Distribution Loss Reduction in Democratic Socialist Republic of Sri Lanka, 2011
- ✓ Integrated Master Plan Mozambique Power System Development, 2018

6. Financial analysis

(1) Financial situation of SP

SPs current and medium-term financial position were analyzed and estimated based on the latest publicized data (SP 2019 Annual Report) and additional data provided by SP. SP's operating profit and recurring profit have been stable since 2011 due to the review of electricity prices, and the recurring profit margin has been high at around 20%. The company also secured a very high equity ratio of 59.2% in 2019, excluding gains and losses from the revaluation of fixed assets. The financial soundness of the company is high, with cash balances exceeding SI$300 million and a current asset ratio of 813.1%.

(2) Financial viability of the development plan

Based on Scenario 3, which is the base case of the Renewable Energy Development Plan, we conducted an economic and financial analysis of SP through to 2030. Due to capital investment costs, there is a financial risk that cash deposits on hand will fall to about one times monthly sales in 2024. For this reason, the company may temporarily consider additional borrowing. The introduction of an IPP could also be considered as a way of reducing initial capital investment costs.

(3) Impact of IPP participation

In Scenario 3, the impact of IPP participation is examined by dividing the development capacity into four patterns; Pattern 0, where all PV plants are owned by SP, and Pattern 4, where all PV plants are developed and operated by IPPs. The ratio of IPP are allocated on the prorate basis for Patter 1 and 2 as the value between Pattern 0 and 4. A high ratio of IPPs is necessary to account for year-end cash balances in 2024. On the other hand, a lower IPP ratio is desirable in view of the incremental cash balance at the end of 2030. A certain level of IPP participation is recommended, taking into account the capacity for additional investment in grid expansion and reinforcement, including in remote islands, the ability to borrow on the basis of financial soundness, and the promotion of the power sector through private investment.

7. Implementation Promotion

(1) Outline of implementation promotion measures

Based on issues from the previous study and the issues raised in the course of this work, the following measures were considered as implementation promotion measures to support the promotion of RERM,

and various implementation promotion plans were incorporated into the roadmap together with Power Development.

- Reform of the land use system for renewable energy
- Introduction of Third Party Ownership (TPO) model for small and medium sized PV installations
- Development of IPP guidelines
- Capacity building
- Structural reform in the power sector

(2) Various measures

(a) Reform of land use system for renewable energy

In order to solve the problem of land acquisition, which is the biggest challenge in the implementation of infrastructure projects in the country, the strategy was divided into three stages: short term, medium term and long term, with the final goal of regularizing the Tina River Hydropower plant model. In the short term, MMERE and SP will share land information with investors through public calls for land and listing of projects, and by publicizing the pipeline. In the medium term, MMERE and SP will facilitate land acquisition by designating renewable energy projects as national projects, and in the longer term, MMERE and SP will promote the "Tina Model", which integrates the various land acquisition strategies that worked for Tina.

(b) Promoting the introduction of the Third Party Ownership (TPO) model

In addition to addressing the land issues outlined above, we recommended the introduction of the Third Party Ownership (TPO) business model as an alternative. Specifically, TPO companies would install roof-mounted solar installations on government buildings, commercial buildings and homes. All initial installation costs would be borne by the TPO operator, who would retain ownership of the equipment. In return, the roof owner would receive a discounted electricity contract and would be given priority to use the equipment for their own consumption in the event of grid failure. By encouraging this business model, it is hoped that new TPO operators would enter the market and increase the share of renewable energy.

(c) Development of IPP Guidelines

In order to promote private investment, IPP guidelines have been developed to compile the necessary information on licensing, risk sharing, surrounding infrastructure and applicable laws. The IPP Guidelines are organized in the following chapters.

1. Introduction
2. What the IPP Guidelines cover
3. Electricity Market Environment in Solomon Islands
4. The Role of Government
5. Application of the IPP Guidelines
6. Power Purchase Agreements

(d) Capacity Building

As capacity building measures, it was recommended to strengthen government institutions, set up university partnership programs, and develop local suppliers through hybrid projects. Specifically, an IPP office should be established directly under the Director of Energy of MMERE as a governmental body to be in charge of all procedures related to the installation of renewable energy as IPP. It also recommended the expansion of SINU's training program for engineers who are not willing to meet with the government, and the establishment and funding of small-scale hybrid solar and battery projects that can be completed by local engineering and construction companies.

(e) Structural reforms in the power sector

In order to create a transparent market environment and attract domestic and foreign private investment, we recommended the establishment of an independent regulatory department. Referring to the examples of neighboring countries in the Pacific, the final step 3 was to establish a multi-sectoral

regulatory body to regulate not only electricity but also other sectors such as telecommunications and water supply in an integrated manner. In order to achieve this goal, the EAC will be established as a cross-ministerial body and its regulatory functions will be transferred to the government.

8. Renewable Energy Road Map

8-1 Establishment of RERM

Recommended RERM is shown below.

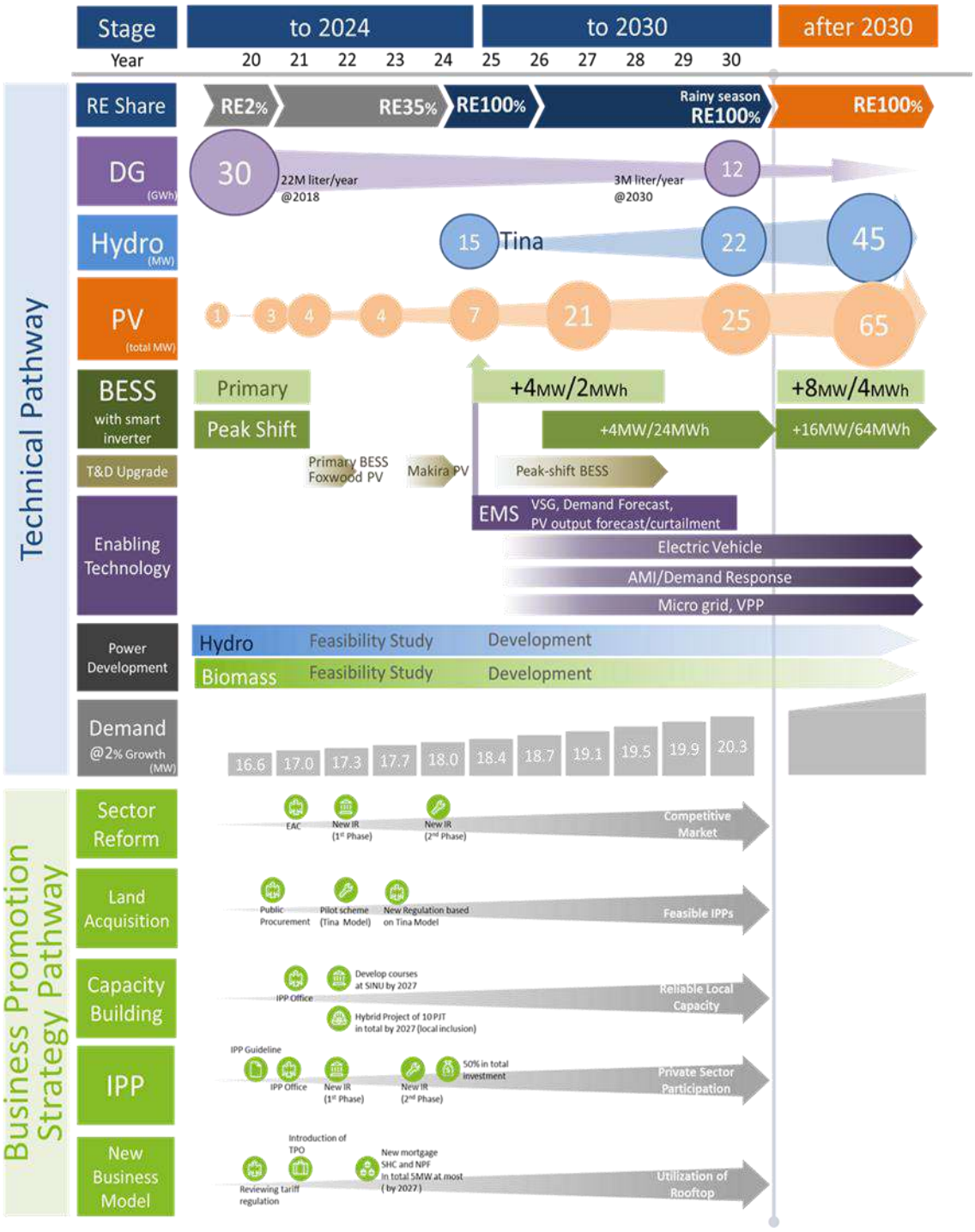

Source: JICA Project Team

Outline of Renewable Energy Road Map for Honiara Grid (Draft)

8-2 Technical recommendation

(1) Support for Introduction of EMS and BESS (by 2025)

- Feasibility study for EMS and BESS to determine the specifications of the EMS and BESS in more detail, such as examining carefully the required amount and determining the required performance and unit capacity of the battery in consideration of the duty cycle (charge/discharge pattern)
- Donors' support for introduction and EMS and BESS

(2) Support for Capacity building for power system operation with renewable energy 100% (before and after 2025)

- Getting familiar with functionality of EMS and BESS
- Economic dispatching control training with demand forecast and PV output prediction
- Learning virtual synchronous generator function along with primary BESS introduction
- Understanding correspondence for outage accident with EMS operation

(3) Renewable energy potential investigation (2022 - 2030)

- Comprehensive investigation for hydro power plant in Guadalcanal Island
- Formulating and prioritizing hydro power development plan
- Study for feasible biomass generation and developing potential map
- Fundamental data collection and potential survey for wind and geothermal
- Technical transfer to MMERE and SP through the above work

Chapter 1 Introduction

1-1 Background of the Study

In Solomon Islands (SI), the electricity tariff is very high (around 65 US cents per kWh) due to the high dependency on imported fossil fuels for diesel generators (DG). Further development of renewable energy (RE) is regarded as one of the key drivers for promoting affordable energy supply for the whole country.

Development of RE is also critical from the viewpoint of tackling climate change. In the Nationally Determined Contributions (NDC), the Government of Solomon Islands committed to reduce emissions by 30% below 2015 levels by 2030 compared to the Business as Usual (BaU) projection, of which the power sector accounts for 39% of the reduction through RE and energy efficiency.

In the Draft Solomon Islands National Energy Policy formulated in 2014, which is currently under review, it is indicated that Solomon Islands has the potential to increase electricity access and the share of RE in electricity up to 100% by 2050. The Solomon Islands Electricity Authority, trading as "Solomon Power" (SP), has targeted 100% RE in the Honiara grid by 2030 in its business plan.

Further expansion of RE may cause unexpected disturbances in the power system and therefore proper solutions have to be carefully analyzed from technical and financial viewpoints, including coordination with DG, systematic RE output restriction, introduction of enabling technologies such as battery storage and energy management system (EMS), and utilization of demand side response measures. Besides, as promotion of RE requires large scale capital investments, the implementation framework to enable the technically formulated scenario should also be take into consideration its financial feasibility.

The Government of Solomon Islands has thus requested the Government of Japan to cooperate in "the Project for Formulating Renewable Energy Road Map" (the Project). The Project commenced in August 2019 on basis of the Record of Discussions (R/D), an agreement between Ministry of Mines, Energy and Rural Electrification of Solomon Islands (MMERE), SP, relevant organizations in Solomon Islands, and the Japan International Cooperation Agency (JICA), and the data collection survey (the first phase) was conducted from November 2018 to March 2019. As part of the Project, a Renewable Energy Road Map (RERM) will be drafted up in collaboration with MMERE, SP and relevant organizations.

1-2 Purpose of the Project

The Project goal is to draft up a feasible RERM for the Honiara Grid, prepare an implementation framework, and support an approval process of RERM.

1-3 Project Period

The Project period was conducted for the period from August 2019 to May 2021.

1-4 Area for RERM

The target of the Project is the area within the Honiara Grid shown in Figure 1-1.

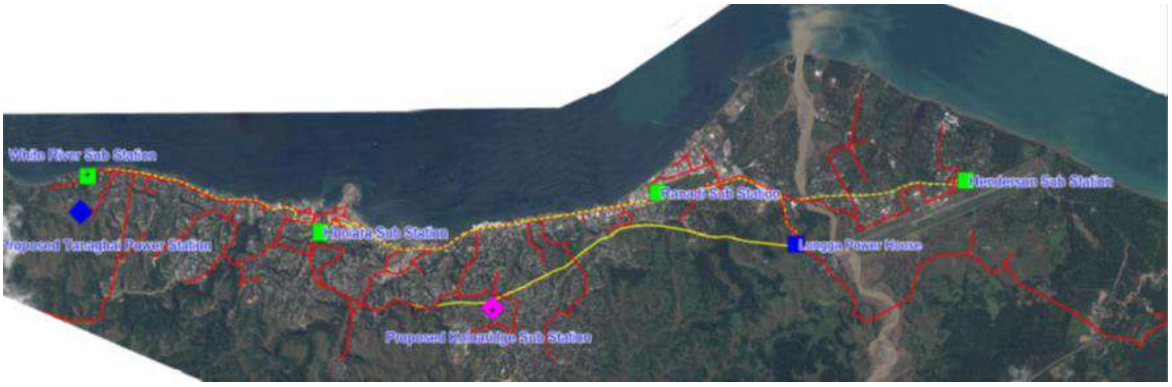

Source: JICA Project Team

Figure 1-1 Overview of the Honiara Grid

1-5 Relevant Ministries, Agencies and Organizations

Table 1-1 outlines the relevant ministries, agencies and organizations, which the Project Team has communicated with for data collection and consulted with on the RERM. Table 1-2 highlights the main discussion points with other donors and other organizations in the Project.

Table 1-1 Outline of Relevant Ministries, Agencies and Organizations

Organization	Outline
Main Counterpart	
Ministry of Mines, Energy and Rural Electrification (MMERE)	・Updating energy sector policy and plan for the RE strategy and investment plan ・Confirmation on the progress for the National Energy Policy and Electricity Act to be amended ・Consideration of the governmental window for the introduction of an IPP ・Updating renewable energy potential and strategy
Solomon Power (SP)	(Technical department) ・ Strategy on RE development, power generation historical records, transmission and distribution records, hydro development plan, potential sites for solar power, transmission and distribution network data, power system operation data, customer information (contract number, contract category, sales record, demand forecast) (Financial viewpoint) ・Consideration for IPP guidelines, Third Party Ownership: TPO business model ・
Governmental Organization	
Tina Hydro Project Office	・Management for the Tina Hydro Project
Economic Reform Unit (ERU)	・Tax reform implemented in SI ・Possibility of tax exemption/deduction for RE ・Taxation to new business model
Ministry of communication and Aviation (MCA)	・Probability to introduce PV on MCA facilities
Ministry of Lands, Housing & Survey(MLHS)	・Regulations related to land rights and acquisition ・Landowner's information on potential solar power sites ・Land issues raised on relevant projects ・Public invitation for land

Organization	Outline
Ministry of National Planning and Development Coordination (MNPDC)	・Information collection for donors from foreign countries
Telecommunication Commission of Solomon Islands (TCSI)	・Discussion on establishment of an independent regulatory authority
Capacity Building	
MEHRD (Ministry of Education and Human Resources Development)	・Management for the Selwyn College project (PV + BESS + DG)
Solomon Islands National University (SINU)	・Discussion on renewable energy human resource development program ・Training facility inspection
CBS Solution	・Discussion on assumed contractual challenges in executing renewable energy project in Solomon Islands
Land acquisition system	
The Office of the Prime Minister and Cabinet (OPMC)	・Discussion on how to cope with land issue
Ministry of Lands, Housing & Survey (MLHS)	・Regulations related to land rights and acquisition ・Landowner's information on potential solar power sites ・Land issues raised on relevant projects ・Public invitation for land ・Discussion on how to cope with land issue
Donors / Other Countries' Government	
・Confirmation on the progress for National Energy Policy and Electricity Act being amended Discussion on regulator independence	・Confirmation on the progress for the National Energy Policy and Electricity Act being amended ・Discussion on regulator independence
Information collection with ongoing and/or upcoming renewable energy projects	・Information collection with ongoing and/or upcoming renewable energy projects

Source: JICA Project Team

Table 1-2 Main Discussion Points with Other Donors and Organizations

Organization	Outline
Other donors and other countries' government	
World Bank (WB)	・Confirmation on the progress for the National Energy Policy and Electricity Act being amended ・Discussion on regulatory independence
Asian Development Bank(ADB)	
Australian High Commission (AHC)	・Information collection with ongoing and/or upcoming renewable energy projects
New Zealand High Commission (NHC)	
Other organizations	
Solomon Housing Ltd(SH)	・Rooftop solar business model ・Information collection for housing circumstances ・Land price information
Central Bank of Solomon Islands (CBSI)	・Information collection and discussion regarding financial analysis
JF Consulting(JFC)	・Possibility to introduce solar PV in Pacific Games Project (PGP) ・Local contractors information

Source: JICA Project Team

1-6 Overall Project Schedule

Figure 1-2 shows the overall project schedule in SI scheduled to be implemented by the Project Team.

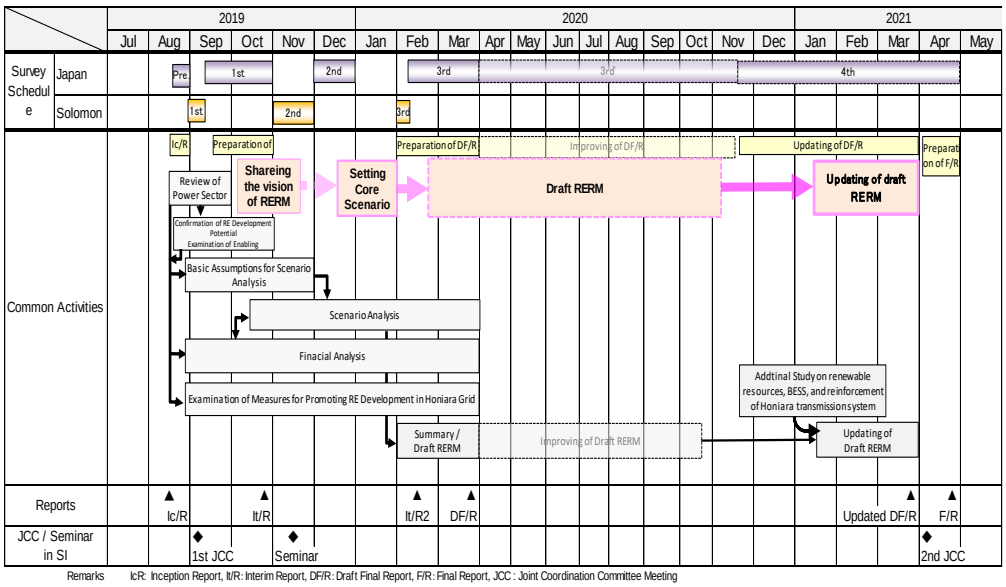

Source: JICA Project Team

Figure 1-2 Overall Project Schedule

Chapter 2 Energy Sector in Solomon Islands

2-1 Basic Policy in Power Sector

2-1-1 Outline of Basic Power Policy

Since the SI is an island nation in the Pacific and is susceptible to sea-level rise caused by global warming, tackling climate change is an urgent and top priority. Under these circumstances, MMERE and SP are aiming to promote the introduction of renewable energy in the power sector.

Specifically, MMERE has set the national renewable energy ratio in the Renewable Energy Strategy and Investment Plan (RESIP) to 100% by 2050 on a power generation basis, and SP has set a target of 100% renewable energy by 2030.

The national electrification rate in SI is only 12%, and the electrification rate in the capital Honiara is 64%. The SI government has targeted to increase electrification rates to 80% by 2025 in urban areas and to 40% by 2025 in rural areas.[2]

2-1-2 Electricity Tariff

Most of the electricity in SI is currently provided by diesel power generation using imported fuel. For this reason, the power generation cost is greatly affected by the market price and transportation cost of the fuel, and an extremely high electricity tariff is set to ensure the sound management of Solomon Power (SP). Table 2-1shows the average electricity prices for FY2019 and FY2020, and Table 2-2 and Table 2-3 show the electricity tariffs revised in January 2020. Reducing power generation costs is one of the most important issues in reducing electricity tariffs and promoting development in SI.

Table 2-1 Average Electricity Price

	2019	2020
Sales Electricity (kWh)	68,781,681	68,571,174
Revenue（million SBD）	480.46	452.55
Average Electricity Price（SBD/kWh）	7.0	6.6
Average Electricity Price（USc/kWh ）[3]	87.6	82.7

Source: JICA Project Team based on SP data

[2] MMERE, Solomon Islands National Energy Policy and Strategic Plan
[3] Apply: 1SBD = 0.12535USD (as of April 13, 2021)

Table 2-2 Meter Reading Customer's Tariff (Revised on January 1, 2020)

Category		Network Access Charge	Fuel Charge	Non-Fuel Charge
		SBD/Month	SBD/kWh	SBD/kWh
Residential	D1 < 50 kWh	16.89	2.34	3.57
	D2 50-200 kWh	56.29	2.34	3.64
	D3 200-500 kWh	112.58	2.34	3.71
	D4 > 500 kWh	225.15	2.34	4.19
Commercial	C1 < 250 kWh	45.03	2.34	4.26
	C2 250-600 kWh	112.58	2.34	3.84
	C3 600-1,300 kWh	225.15	2.34	3.53
	C4 1,300-2,500 kWh	450.30	2.34	3.18
	C5 > 2,500 kWh	1,688.63	2.34	3.02
Industrial	I1 < 1,300 kWh	112.58	2.34	3.91
	I2 1,300-6,000 kWh	450.30	2.34	3.36
	I3 > 6,000 kWh	3,377.26	2.34	2.99

Source: JICA Project Team based on SP data

Table 2-3 Electricity Tariff for Cash Power Customers (Revised on January 1, 2020)

Category		Network Access Charge	Fuel Charge	Energy Charge
		SBD/kWh	SBD/kWh	SBD/kWh
Residential	D1 < 50 kWh	3.98	2.34	6.32
	D2 50-200 kWh	4.04	2.34	6.38
	D3 200-500 kWh	4.06	2.34	6.40
	D4 > 500 kWh	4.65	2.34	6.99
Commercial	C1 < 250 kWh	4.55	2.34	6.89
	C2 250-600 kWh	4.14	2.34	6.48
	C3 600-1,300 kWh	3.82	2.34	6.16
	C4 1,300-2,500 kWh	3.68	2.34	6.02
	C5 > 2,500 kWh	3.24	2.34	5.58
Industrial	I1 < 1,300 kWh	4.42	2.34	6.76
	I2 1,300-6,000 kWh	4.35	2.34	6.69
	I3 > 6,000 kWh	3.17	2.34	5.51

Source: JICA Project Team based on SP data

2-1-3 Targets for Energy Efficiency and Transmission and Distribution Losses Reduction

(1) Energy Efficiency Target

MMERE's latest plan (National Energy Policy 2019-2029) aims to improve current energy efficiency and conservation by 10% in all sectors by 2025.

(2) Transmission and Distribution Losses Targets

Transmission and distribution losses, marked as 18% in the Honiara grid during the year 2018, are classified into technical losses and non-technical losses. Of total losses in 2018, technical losses were estimated at 11%, while non-technical losses were estimated at 6%. No specific plan is in place to lower technical losses further. For a small island country like SI where the distribution line length is relatively short, reducing technical losses below 11% is generally challenging. Improving technical losses by 1% could be possible with the completion of planned replacement work for old distribution transformers.

2-2 Power Demand in Honiara Grid

2-2-1 Power Demand Situation

As of 2019, SP has 19,000 customers within the Honiara grid where the annual generation record and maximum demand marked 85.115 GWh and 16 MW respectively in 2018. Accordingly, the grid recorded a load factor of 60.7% in the same year. There was strong growth between 2014 and 2017, with average growth rates of 3.8% for maximum demand and 3.6% for power generation. Table 2-4 and Figure 2-1 show the changes in maximum demand and annual power generation in the Honiara grid.

Table 2-4 Maximum Demand and Annual Generation Trend in the Honiara grid

Year	Maximum Demand (MW)	Annual Generation (GWh)	Load Factor	Demand Growth	Generation Growth
2007	12.6	66.8	60.5%	-	-
2008	12.6	68.6	62.1%	0.1%	2.7%
2009	12.9	69.8	61.8%	2.1%	1.7%
2010	13.8	74.5	61.7%	6.5%	6.4%
2011	12.9	74.7	66.2%	-7.1%	0.2%
2012	14.2	75.3	60.4%	9.6%	0.8%
2013	13.6	73.0	61.2%	-4.6%	-3.2%
2014	14.1	77.4	62.6%	3.4%	5.7%
2015	14.4	78.7	62.3%	2.3%	1.7%
2016	15.5	84.0	62.0%	6.7%	6.3%
2017	15.9	84.6	60.6%	2.9%	0.7%
2018	16.0	85.1	60.7%	0.4%	0.6%

Source: JICA Project Team based on SP data

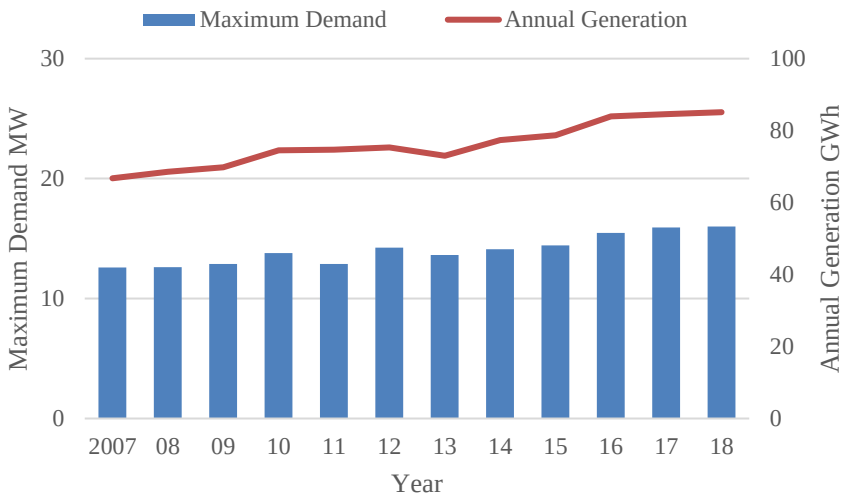

Source: JICA Project Team based on SP data

Figure 2-1 Trend in Maximum Demand and Annual Generation in Honiara Grid

2-2-2 Gross Domestic Product (GDP) in SI

Table 2-5 shows GDP history and projection in SI from 2014 to 2020.With this trend, GDP growth rate seems realistic to be 2.5% to 3.0% in upcoming years unless significant change occurs among sectors in SI.

Table 2-5 GDP Growth Rate History and Projection in Solomon Islands

Year	2014	2015	2016	2017	2018	2019	2020
GDP Growth Rate (%)	1.8	2.6	3.4	3.4	3.8	2.8	2.7

Source: ADB[4]

[4] Asian Development Bank, https://www.adb.org/countries/solomon-islands/economy

Figure 2-2 shows GDP history in SI and annual generation record (GWh) in Honiara grid from 2007 to 2018.

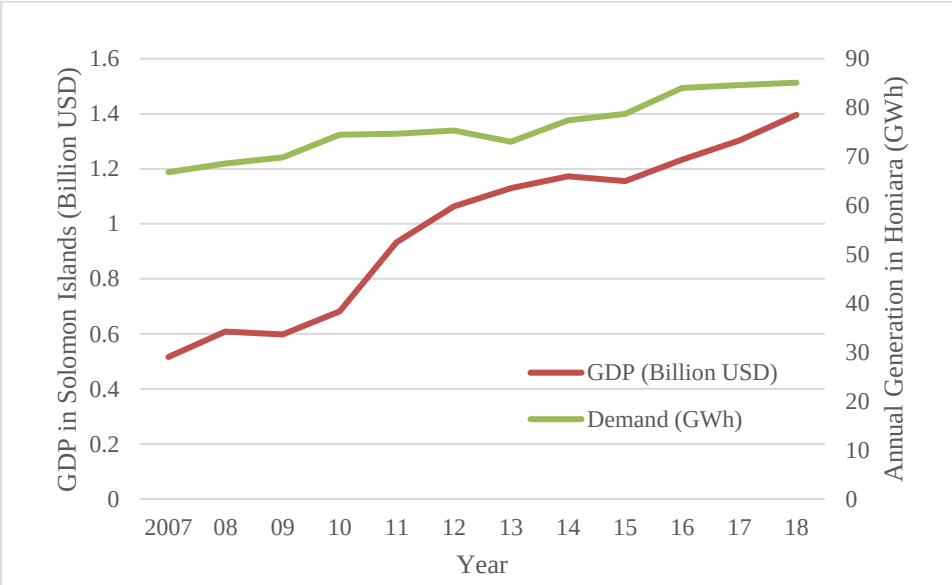

Source: Prepared by JICA Project Team based on data provided by SP and data publicized by WB

Figure 2-2 GDP History in Solomon Islands and Annual Generation in Honiara Grid

2-2-3 Population

Figure 2-3 shows SI's population history and projection. In the graph, the population history is colored in blue, and the projection is colored in grey, with the growth rate depicted by the orange curve. This graph indicates that population is expected to increase continuously through 2025, albeit at a diminishing rate.

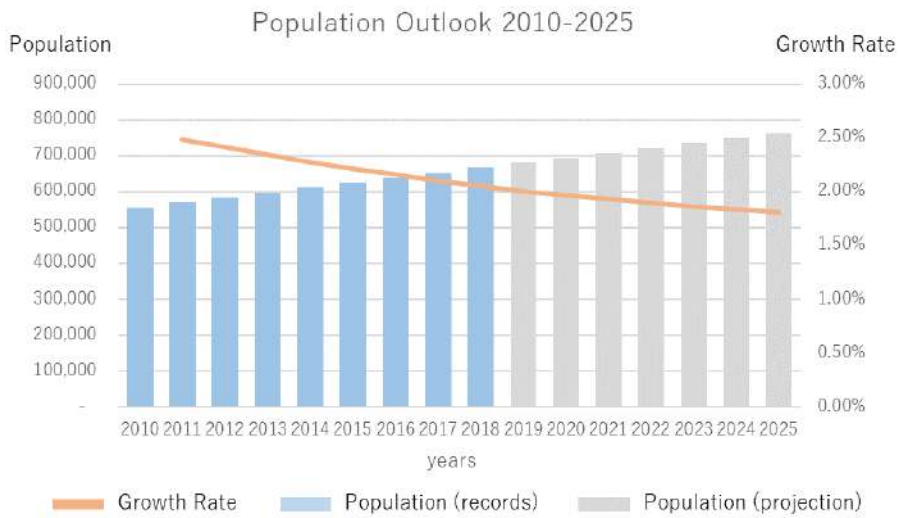

Source: Prepared JICA Project Team based on data from MoF

Figure 2-3 Population Outlook in Solomon Islands

2-3 Existing Power Supply Facility

The current main source of energy in the Honiara grid comes from diesel generators using imported fuel, which is a major factor resulted in the high electricity tariff in SI. There exist some projects for outer

islands and some suburban areas outside the Honiara grid with solar hybrid systems. These are operated as off-grid systems and consist of photovoltaics (PV), battery energy storage systems (BESS) and DGs. However, the RE resources currently connected to the main grid are just two; the Fighter One solar power plant with 1MW name plate capacity which started operation in 2016; and a 50 kW solar unit installed on the roof of the parking lot in the SP headquarters premises. Thus, the RE share in the energy mix of the Honiara grid is just around 3% based on the output capacity. Table 2-6 outlines of the existing power supply facilities in the Honiara grid.

Table 2-6 Outline of Existing Power Plants Feeding the Honiara Grid

Name of Power Plant		COD	Category	Install Capacity (MW)	Available Capacity (MW)	Starting Time (min)	Expected Decommission Year
Lungga	L1	2016	Diesel	2.5	2.5	1	2039
	L2	2016	Diesel	2.5	2.5	1	2039
	L3	2016	Diesel	2.5	2.5	1	2039
	L4	2016	Diesel	2.5	2.5	1	2039
	L6	1998	Diesel	2.9	2.2	1	2024
	L7	2005	Diesel	4.2	3.8	1	2036
	L8	1993	Diesel	4.2	3	1	2024
	L9	1999	Diesel	4.2	3.8	10	2029
	L10	2006	Diesel	4.2	3.8	10	2036
Honiara	H1	2013	Diesel	1.5	1.5	3	2038
	H2	2013	Diesel	1.5	1.5	3	2027
Fighter One		2016	PV	1.0	1.0	-	2026
Ranadi			PV	0.05	0.05	-	-
TOTAL				33.75	30.65		

Source: Prepared by JICA Project Team based on SP document

The existing major generators are the Lungga Power House, the Honiara Power House, and the Fighter One solar power station. At the moment, the Lungga Power House with 29.7 MW is the biggest plant in Honiara and feeds the grid most, while Honiara Power House with 3.0MW mainly generates at a constant output. Commissioned in 2016, the Fighter One 1 MW solar power station currently provides renewable energy at a maximum 840 kW peak output to Honiara customers without BESS.

2-3-1 Existing Power Stations

(1) Diesel Power Generator

The Lungga Power House has new units, L1 to L4, which are capable of balancing supply and demand meticulously with an automatic frequency control (AFC) function. Thanks to the new generator units and the calm fluctuation of demand in the Honiara grid, the system frequency retains a range of 50.0 ±1 Hz. Due to no significant changes in demand patterns throughout the year, there is currently no seasonal power generation plan in place, and the generators run consistently throughout the year.

The Honiara Power House runs two generator units with one personnel deployed as a supplemental operation engineer.

Table 2-7 shows the operation record in 2018 for the Lungga Power House and Honiara Power House diesel generators.

Table 2-7 Diesel Generators Operation Records in 2018

Power Plant	Unit	Capacity (MW)	Annual Generation (MWh)	Annual Fuel Consumption (kl)	Fuel Consumption Rate (l/kWh)	Capacity Factor	COD
Lungga	L1	2.5	11,761.0	2,873	0.244	53.7%	2016
	L2	2.5	7,482.4	1,866	0.249	34.2%	2016
	L3	2.5	11,467.9	2,624	0.229	52.4%	2016
	L4	2.5	11,382.3	2,641	0.232	52.0%	2016
	L6	2.9	1.2	0.3	0.245	0.0%	1998
	L7	4.2	6,345.5	1,701	0.268	17.2%	2005
	L8	4.2	7,686.2	1,948	0.253	20.9%	1993
	L9	4.2	6,946.4	1,811	0.261	18.9%	1999
	L10	4.2	18,679.5	5,205	0.279	50.8%	2006
	Sub total	29.7	81,752.2	20,670	0.253	31.4%	-
Honiara	H1	1.5	1,345.9	370	0.275	10.2%	2013
	H2	1.5	1,117.1	309	0.277	8.5%	2013
	Sub total	3	2,463.0	679	0.276	9.4%	-
TOTAL		32.7	84,215.2	21,350	0.254	29.4%	

Source: JICA Project Team based on SP data

(2) Solar PV Station

Fighter One solar farm

Built in 2016 with the support of New Zealand and the United Arab Emirates (UAE), the Fighter One solar farm has name plate capacity of 1MW but generates a maximum of 840 kW peak due to AC/DC conversion losses. The panels were manufactured in China and installed with a 15-degree angle on 1.6 ha of land, with inverters manufactured by German manufacturer, SMA. The panels do not have concrete foundations, and instead are fixed with galvanized piles directly into the ground. There are plans to build a 2 MW solar PV farm on the adjacent land. The voltage-up transformer connected to the Honiara grid has a capacity of 3 MVA, and is built on a concrete foundation around 1 meter in height. The transformer is connected by underground cable with a distribution line which is not dedicated for the 1 MW PV and provides electricity to general customers.

Figure 2-4 shows current photos of the Fighter One solar farm. Figure 2-5 shows the generation record of the PV power plant, and Figure 2-6 shows the capacity factor calculated from the actual record presented in Figure 2-5. From these graphs, it can be seen that the amount of power generation varies greatly from month to month. Although this is simply because there is a difference in the amount of power generation due to the difference in the amount of solar radiation in each month, there have been cases that reconnection was not done after a feeder outage accident recovery, particularly in months where an extremely small generation amount was recorded. From this, it could be said that the solar power plant operation management capability of SP remains a major challenge, indicating a high need for training and capacity building.

Panel Installation Situation #1	Panel Installation Situation #1
Situation under the Panels	Transformer Installation Situation

Source: JICA Project Team

Figure 2-4 Photos of Fighter One Solar Farm

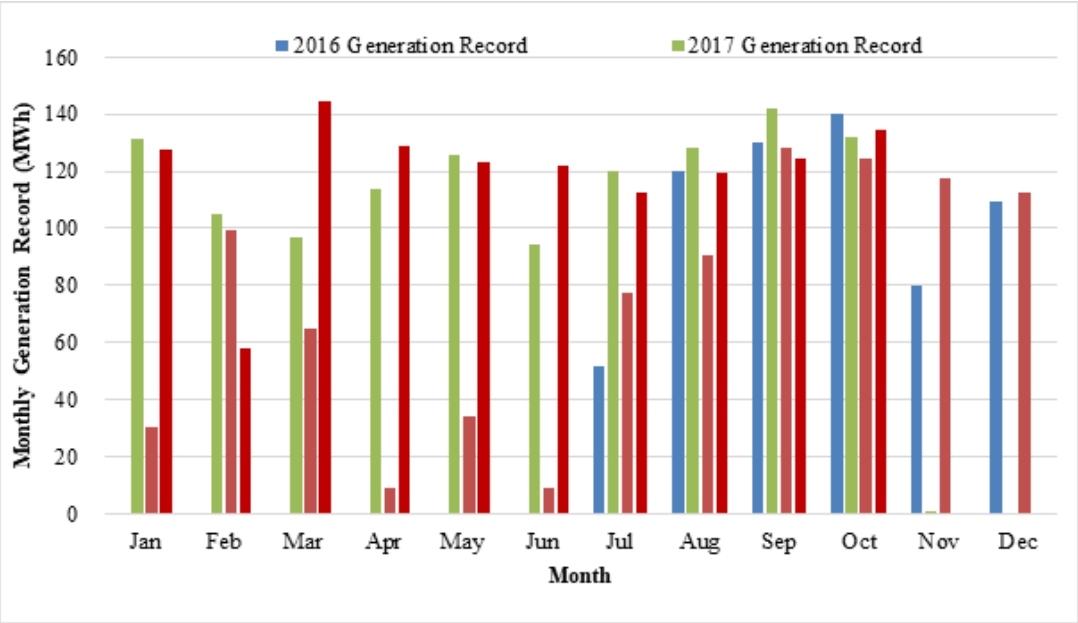

Source: JICA Project Team based on SP data

Figure 2-5 Monthly Generation Record in Fighter One Solar Farm

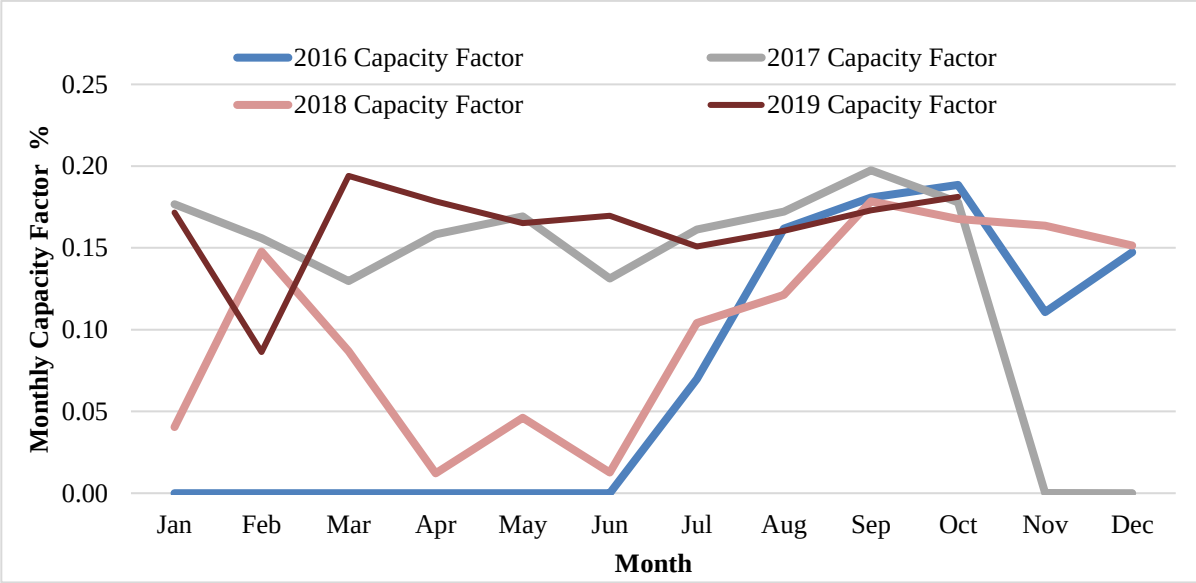

Source: JICA Project Team based on SP data

Figure 2-6 Monthly Capacity Factor Record in Fighter One Solar Farm

2-3-2 Challenges in the Existing Power System in Honiara

One of the main challenges with the existing power system in SI is that it relies heavily on imported diesel, resulting in SI having one of the highest electricity tariffs in the Pacific and world-wide. As of 2019, a total of 1.05 MW of solar power is generated, but its integration with diesel generators has not been implemented, and no coordinated control by SCADA has currently been implemented. In 2021, there are plans introduce SCADA in the Lungga Power House, the largest power station in the grid, enabling remote monitoring of operations, not only the Honiara grid but also in the outer islands.

2-4 Power Development Plan

This section presents an outline of the renewable energy (RE), such as hydro power and PV, development plan incorporated in the current power development plan by SP.

2-4-1 Tina Hydropower Plant

(1) Project Overview

The Tina River Hydropower Development Project overview is summarized from the Project Appraisal Report (May 24, 2017) documented by the World Bank (WB). The WB started a desktop study in 2006, followed by a feasibility study. The first public-private partnership of its kind in SI, the Korea Water Resources Corporation (KW) and the Hyundai Engineering Company (HEC) established a special purpose company, the Tina Hydropower Limited (THL), which will construct and operate the main facilities of the Tina Hydro Project.

On December 6, 2018, the main donor, the International Development Association (IDA) concluded a financial agreement with the Solomon Islands Government (SIG) and THL, while at the same time, THL concluded the Power Purchase Agreement (PPA) contract with SP as the off taker.

Item	Description
River	Tina River
Catchment Area	125 km2
Average Inflow	11.5 m3/s
Dam Type	Roller Compacted Concrete (RCC)
Dam Height and Length	72m, 207m
Dam Volume	199,000 m3
Maximum Water Level	175 m
Effective Water Storage	1.42 million 3
Water Way	3.3 km
Penstock	116 m
Maximum Water Use	18 m3/s
Maximum Head	102 m
Generation Capacity	5MW x 3 Units
Annual Generation	78.35 GWh

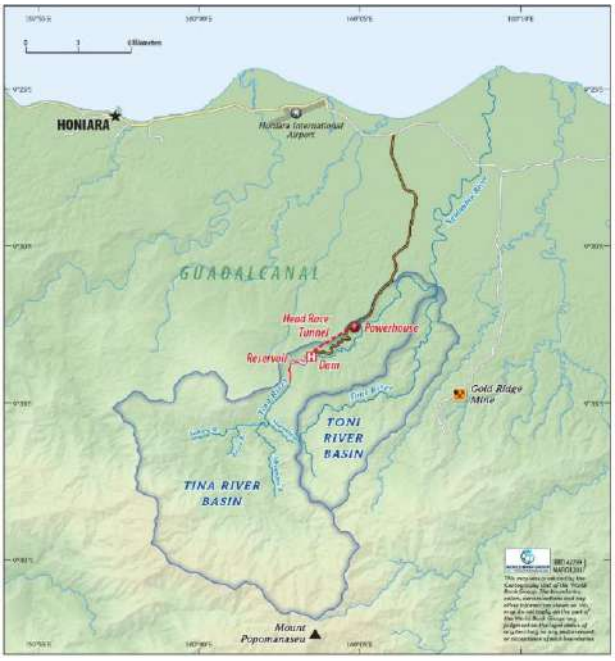

Source: Project Appraisal Report, May 24, 2017

Figure 2-7 Summary of Tina Hydropower Project

(2) Progress

Construction was expected to start in September 2019 and be completed in 2024. However, given the land acquisition process took longer than envisaged, financial close occurred in December 2019, and construction of the access road commenced in February 2020 (aiming for COD in August 2024).

(3) Confirmation of Tina Hydropower Supply Capacity

The energy generated by Tina Hydropower will greatly affect the calculation of the required capacity in battery storage as well as in variable renewable energy, solar PV to be introduced, because the annual generation by Tina Hydropower is almost the same as current annual consumption of electricity in the Honiara grid. Thus, prior to carrying out a supply and demand simulation and cost optimization analysis, it was confirmed whether the power generation plan in the Tina Hydropower Project was appropriate.

(a) Necessity of confirmation

- The annual mean inflow at the dam site (11.5 m3/s) planned in the Tina Hydropower project is almost twice as large as an inflow that is calculated based on historical annual rainfall averaging around 2,000 mm for Honiara. It is therefore necessary to confirm whether rainfall in the catchment area above the dam site is indeed twice as much as the annual rainfall of 2,000 mm, the observatory point of which is only 20 km far from the dam site.
- The river flow data at the dam site has been actually observed for a period of less than 10 years. It is therefore necessary to confirm whether the annual mean inflow at the dam site (11.5 m3/s) planned in the Tina Hydropower project is regarded as a long term mean river flow, which can be used for calculation of annual energy generated by the hydropower plant.

(b) Methods for confirmation

- For the Honiara area, there exists historical rainfall data. For the Chupu Karma area, their exists rainfall data for the period from October 2010 to March 2012, recorded at a rainfall gauging station located upper the dam site. The rainfall data observed in Honiara is compared with that in the area of the upper dam site (or Chupu Karma). The locations of rainfall gauging stations and Tina Hydropower dam site are shown in Figure 2-8.

- First, the ratio between rainfall in Honiara and in Chupu Karma is obtained from the observation rainfall data in both Honiara and Chupu Karma. Next, the long-term rainfall in the catchment area above the dam site is calculated by using the ratio between rainfall in Honiara and in Chupu Karma, while the runoff coefficient in the catchment area is obtained from the correlation between rainfall data at Chupu Karma and Tina River flow. Finally, the long-term average inflow at the dam site is calculated by using the long term rainfall in the catchment area, the runoff coefficient and the catchment area (125 km2), and then is compared with annual mean inflow at the dam site (11.5 m3/s) planned in the Tina Hydropower project.

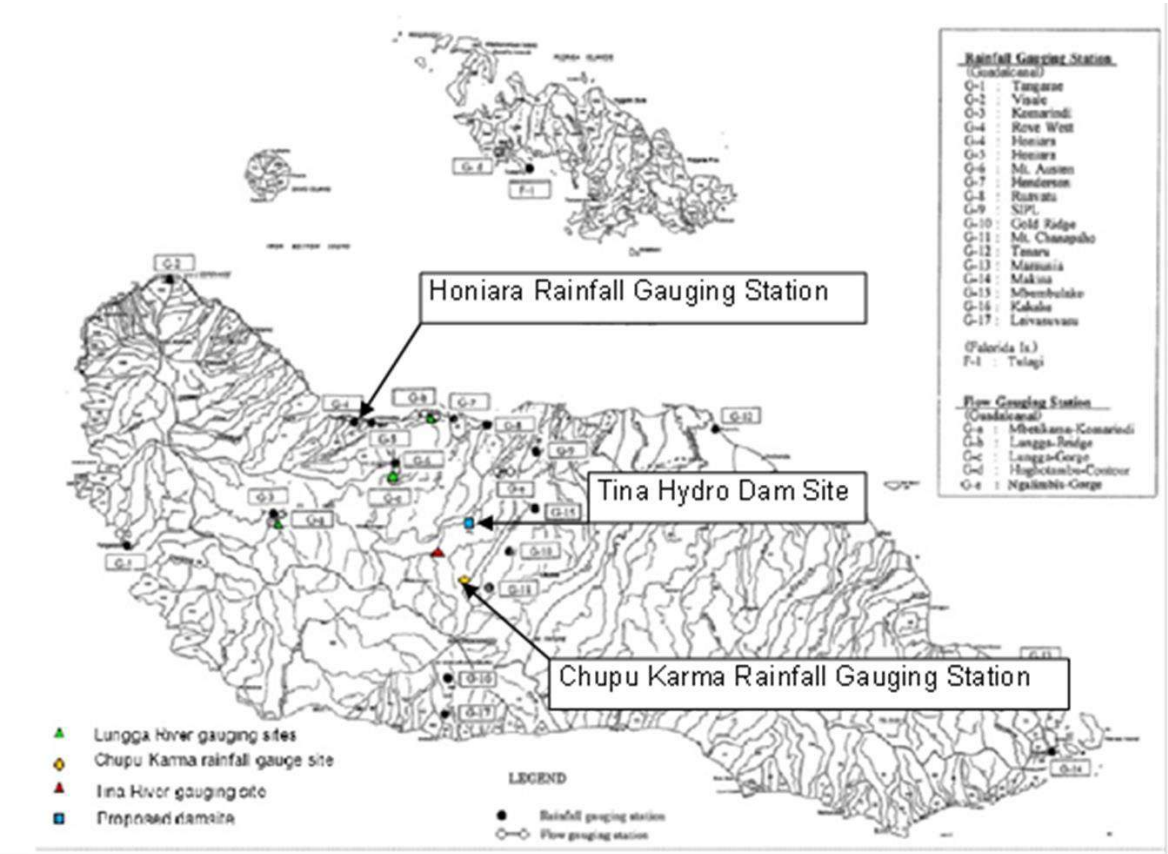

Source: Tina River Hydropower Development Phase 3 report, December 2014

Figure 2-8 Locations of Rainfall Gauging Stations and Tina Hydropower Dam Site

(c) Analyzing

The comparison between rainfall records in Honiara area and in the catchment area above the dam site for a period of 18 months from October 2010 to March 2012 is shown in Table 2-8.

- Calculation of the mean annual inflow from river flow observation data for a period of 18 months from October 2010 to March 2012: Q = 14.47 m^3/s

- Calculation of the runoff coefficient (f) in the catchment area
  ●Runoff coefficient: $f = Q$ (flow m^3/s) ÷ R (annual rainfall mm) ÷ 1,000 ÷ CA (catchment area km^2) × 10^6 × 31,536,000 (sec)
  = 14.47 (m^3/s) ÷ 5,408 (mm) ÷ 1,000 ÷ 125 × 10^6 × 31,536,000
  = **0.68**

Table 2-8 Monthly Rainfall Records of Honiara and Chupu Karma Rainfall Gauging Stations

Month/ year	Honiara (a) (mm)	Chupu Karma (b) (mm)	(b)/(a) %
Oct-10	42.9	413.1	963%
Nov-10	290.5	701.6	242%
Dec-10	325.3	393.4	121%
Jan-11	303.4	504.9	166%
Feb-11	298.7	508.2	170%
Mar-11	144.8	327.9	226%
Apr-11	187.5	295.1	157%
May-11	113.3	527.9	466%
Jun-11	88.9	190.2	214%
Jul-11	76.6	236.1	308%
Aug-11	151.8	508.2	335%
Sep-11	62.3	223.0	358%
Oct-11	211.1	452.5	214%
Nov-11	89.9	462.3	514%
Dec-11	409.9	649.2	158%
Jan-12	307.2	485.2	158%
Feb-12	425.1	662.3	156%
Mar-12	315.2	570.5	181%
Monthly average	214	451	211%
Annual average	2,563	5,408	211%

Source: Prepared by JICA Project Team based on data from Tina Hydro Project Office

- Calculation of the 50-year mean annual rainfall in the catchment area above the dam site using 50 year mean annual rainfall records in Honiara
  ●50 year mean annual rainfall in Honiara = **2,044 mm**
  ●Ratio between Rainfall in Honiara and in the catchment area (Chupu Karma) = **211%**
  → 50-year mean annual rainfall in the catchment area in the upper dam site
  = 2,044 mm × 211% = **4,312 mm**

- Calculation of 50-year mean inflow at the dam site
  ● Q (flow m^3/s) = Runoff coefficient f × R (annual rainfall mm) ÷ 1,000 ÷ CA (catchment area km^2) × 10^6 × 31,536,000 (sec)
  = 0.68 × 4,374 (mm) ÷ 1,000 ÷ 125 × 10^6 × 31,536,000
  = **11.6** m^3/s
  ≒ **11.5** m^3/s
  Annual mean inflow at the dam site planned in the Tina Hydropower project

(d) Results of Confirmation for Tina Hydropower Supply Capacity

- As a result of analyzing observation data in both Honiara and at the Chupu Karma rainfall gauging station located in the area upper the dame site, it was confirmed that rainfall in the catchment area in the upper dam site was actually twice as much as the annual rainfall of around 2,000 mm.
- The 50-year mean inflow at the dam site that was calculated by using long term (50 years) rainfall records observed in Honiara is almost the same as annual mean inflow at the dam site planned in the Tina Hydropower project, and can be regarded as the long-term mean river flow which is appropriate for calculation of annual energy generation of the hydropower plant.

(4) Peak Output Capacity in Dry Season by Tina Hydropower

Since the Tina Hydropower has a regulating reservoir of 1.42 million m3, that is an effective storage capacity equivalent to the amount of water that can be operated for 21.9 hours at a maximum water usage of 18 m3/s, the hydropower plant enables regulating the river flow daily, and peak output even during the dry season. In order to maintain the capacity of the storage battery, it is desirable to constantly supply a certain amount of output even during the dry season. Here, the Project Team calculates the minimum output for constant power generation and the continuable time of the peak output in order to maintain battery storage capacity by the Tina Hydropower.

<u>Estimation of peak output continuation time</u>

Table 2-9 shows the discharges at major percentages of time flow exceeded of the flow duration at Tina Hydropower intake dam site. Assuming that the drought flow is 90% discharge, the average output at the river inflow of about 6 m^3/s is 15 MW × 6 m^3/s ÷ 18 m^3/s = 5 MW.

Table 2-9 River Regime at Tina Hydropower Dam Site

Excess Probability (%)	Monthly Average River Flow (m^3/s)
10	18.4
25	13.6
50	10.0
75	7.8
90	**6.2**

Source: JICA Project team based on Tina River Hydropower Development – Solomon Island, Appendix B - Stage 2 Hydrology Report, 19/6/2012

The maximum discharge of a single unit is: 18 m^3/s ÷ 3 units = 6 m^3/s.
Assuming that the minimum output is 50% output of a single unit (2.5 MW), the minimum operating discharge is: 6 m^3/s × 50% = 3 m^3/s
River own flow 6 m^3/s minus Minimum operating discharge 3 m^3/s = 3 m^3/s can be used for peak power generation.
Assuming a peak output of 10 MW, the discharge is 18 m^3/s × 10 MW ÷ 15 MW = 12 m^3/s
Maximum output time of 10 MW peak power = 24 hours × 3 m^3/s ÷ 12 m^3/s = 6 hours

Therefore, even during the drought period, the peak output of 10 MW can be continued for 6 hours a day. Figure 2-9 shows the daily operation pattern at the time of drought in this case.

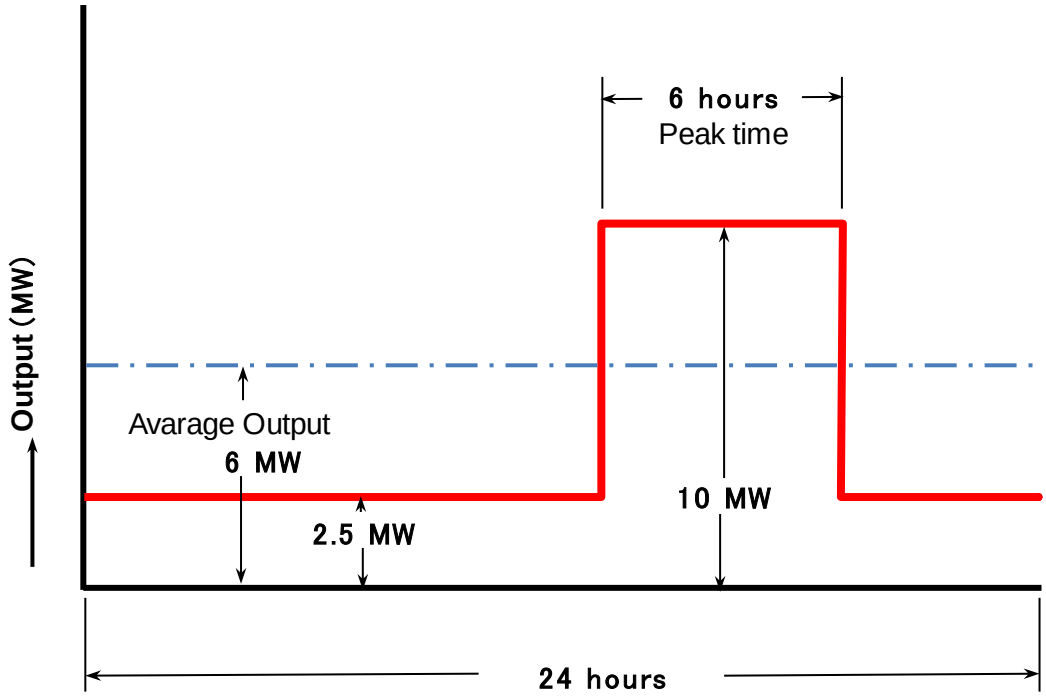

Source: JICA Project Team

Figure 2-9 Tina Hydropower Operation Pattern in Dry Season

2-4-2 Large-scale Solar Power Station

(1) Outline of Development Plan

Table 2-10 below shows the large-scale solar development plan by SP as of January 2020.

Although the land has been found for Foxwood, the Lungga Solar Farm (SDA site), the Tenaru Farm, Tasahe, and Makira, they are not procured by SP.

For the Lungga Solar Farm (Seventh-day Adventist Church (SDA) site) and Tenaru Farm, SP are currently negotiating with the landowners. A successful land acquisition could allow the capacity for the Lungga Solar Farm to achieve 8 MW in total. On the other hand, the capacity of Tanagai, Henderson, and SP's rooftop will be the same as indicated in Table 2-10 since the lands for the solar power stations have been secured by SP.

Depending on the land acquisition results, if the operation of a large-scale solar plant is started as planned, the total PV output capacity of 20.22 MW in Table 2-10 will be connected to the Honiara grid by around 2024. With the existing solar power plant (50 kW rooftop of SP's parking lot and 1 MW Fighter One), the total output capacity is expected to reach at 21.27 MW in 2024.

Table 2-10 Outline of Large-scale Solar Farm Development Plan

#	Project	Capacity (MW)	Land Acquisition Status	Expected Commissioning Year	Remarks
1	Henderson Solar Farm Extension	2	Land procured and registered under SP	2020	Budget Approved Tender Completion
2	Solomon Power Rooftop Solar	0.22	NA	2020	Budget Approved Tender Review
3	Tanagai Solar Farm	1	Land procured and registered under SP	2021	Budget Approved During Tender
4	Foxwood	4	Land not procured yet	2022	Budget not yet approved.
5	Lungga Solar Farm (Seventh-day Adventist Church (SDA) site)	4	Land not procured yet	2022	Budget not yet approved. Concept Design to be developed.
6	Tenaru Solar Farm	4	Land not procured yet	2022	Budget not yet approved. Concept Design to be developed.
7	Tasahe	2	Land not procured yet	2023*	Budget not yet approved.
8	Makira	3	Land not procured yet	2024*	Budget not yet approved.
	SUBTOTAL (1~8)	20.22			
(Reference) The Existing PV as of 2019					
9	Fighter One Solar Farm	1			
10	Ranadi Rooftop Solar @Solomon Power	0.05			
	SUBTOTAL (9~10)	1.05			
	TOTAL	21.27			

*As assumption
Source: JICA Project Team based on SP's data

Source: JICA Project Team based on SP's data

Figure 2-10 Large-scale Solar Development Plan in Honiara Grid

(2) Central Battery Concept

SP is enthusiastically working to secure land for large-scale solar power generation aiming at expanding the use of renewable energy. At the same time, SP has a central storage battery concept, and published an invitation to tender for consultant services for the central storage battery system in October 2019 in order to determine detailed battery specifications, but an engineering consultant was not selected. As of February 2020, SP was considering a schedule for this storage battery concept plan with its own funds, but due to the impact of COVID-19, the plan is to return to a design consultant.

2-4-3 Small- and Medium-scale Solar Power Station

For small- and medium-scale solar power, the Project Team considered with SP introducing third party ownership aiming rooftop solar augmentation. Although the abovementioned large scale PV would play a significant role to achieve RE 100%, a certain amount of non-utility scale PV installed on demand side should be also needed due to assumed lack of RE resources for future in consideration of land issue in SI. Solomon Housing plan to sell 3,500 houses in future, and the roofs can be utilized to install solar panels equivalent to 5 MW in total. Moreover, a hybrid (PV + DG + battery storage) power generation system attached to a school has been introduced in the west Honiara grid by the MECC. The generation capacity is a small size (around 160 kW), but a similar application to other sites is expected in the future.

Setting capacity target will be necessary in consideration of demand and supply simulation results and the aforementioned mega solar penetration. To achieve this target this should remain a central aspect of government policy.

Considering land issues in SI (discussed in the next section) and the gap between the need for solar PV capacity and the possible installation capacity by utility-scale solar PVs, the prevalence of small- and medium-scale PVs can be one of the solutions to promote renewable energy and increase its proportion in the energy mix in SI.

(1) Market Overview

Small- and medium-scale PVs have not been installed on rooftops nor vacant premise either in the Honiara grid except for some government buildings. There are mainly two reasons; one is installation cost and the other is the Standby Charge. Many individual households cannot afford the capital cost of the equipment due to their income levels. Besides, many old buildings need an assessment for strength design for supporting PVs.

The Standby Charge is calculated daily as a connection fee to SP's power grid, backed by the current Electricity Act. The purpose of the standby charge is to secure sufficient capacity reserve with backup diesel generators to alleviate output fluctuations caused by solar PV. All PV owners including individual households, commercials and industries should pay the charge if they install rooftop PV. The charge is calculated based on the "value of electricity that would have been consumed had the standby plant not been operated". SP applies a charge by "Daily Standby Charge" formula. The rate and an example for a 4 kW solar power system is shown below;

Daily Standby Charge = 50% of [4.4 x (4 kW inverter rating) x (SIEA) Domestic or Commercial Tariff)]

Table 2-11 Standby Charge (a case of 4.0 kW solar PV)

Connection Type	Act Req 50%	kW rating in Times	Inverter Rating (kW)	Rates-Tariff	Daily Standby Charge (SBD)
Domestic Customer	50%	4.4	4.0	6.4685	56.92
Commercial Customer	50%	4.4	4.0	6.9530	61.19
Industrial Customer	50%	4.4	4.0	6.7719	59.59

Source: prepared by JICA Project Team based on "Solar Power System Connection Manual" provided from SP

A household that installs a 4 kW system would be levied SBD 1,707.6 (= SBD 56.92 x 30 days), which impedes widespread adoption of solar PV.

(2) Future Study

MMERE is planning to review the current Electricity Act. They will procure a consultant for the review work, supported by the WB. The project overview has been discussed between MMERE and WB, and as of May 2020, MMERE submitted the final draft of EOI for WB' s review. MMERE agrees that removing or lowering the rate of the standby charge could increase the prevalence of small- and medium-scale solar PVs. It is, therefore, expected that MMERE, supported by development partners, discusses the issue with SP including the possibility of fully removing the standby charge.

2-4-4 Land Usage Situation for Solar Power Station

(1) Land Acquisition

Land acquisition issues are the biggest barrier for all infrastructure projects in SI, including power stations. It typically takes years for settlement of issues mainly due to unclear boundaries, communal ownership, and land values of customary owned lands. Even registered lands have similar issues compared to customary lands; in some cases, individuals would insist on land rights for already registered land, causing disputes. This section is to make clear the land issues in SI.

(2) Law and Regulation

The Land and Title Act (1988: amended in 1996) prescribes landownership, the legitimate land acquisition process for customary land and the function and power of relating agents including the land registry, the Registrar and the Commissioner of Land, the Adjudication Officer and the Acquisition Officer. Under the Act, all registered lands in Honiara and eight provincial headquarters and almost all the commercial plantations are owned by the SIG under the administration of the Commissioner. Perpetual estates are also owned by the SIG and leased out to private tenants and industry for a fixed term of up to 75 years.

(3) The Overview and Issues

Land availability is the major barrier for infrastructure projects in SI. This depends on the categories of lands; Land in SI is either customary owned or registered land. Registered land belongs to the Commissioner of Lands and SIG with appropriate areas, boundaries, and owners under the statutory procedure. The mapping office manages registered land and all related information (e.g. GIS data) of registered land is owned by the SIG and administrated by the Register Title Office that is under the jurisdiction of the Ministry of Justice. Only approx. 20% of available land is properly registered and managed under the Act. In case the land that somebody wants to obtain is registered and leased out, new businesses are to negotiate with the lessee of the land. New businesses must apply to the Commissioner of Land to change lessee of the land after settling the negotiation.

Customary land, comprising about 80% of the land, is owned by clans or tribes and inherited beyond generations, without any record at the Land Registry (i.e. ownership, land boundaries). In case a candidate site is not registered to the Land registry, an Acquisition Officer surveys the site boundaries and identifies landownership after a public hearing with clans. The officer negotiates after identifying the owners. The negotiation can take at least four to five months, depending on the conditions that the candidate sites face. The parcel numbers and a landowner are registered with the Register Title Office. Besides, if the lessee of the candidate site is a state-owned enterprise (SOE), negotiation is undertaken directly with the SOE, not via the Register Title Office. Registered land is leased out, for up to 75 years, under the Land and Title Act after the SIG obtains the land. Provided the land is leased for public non-profit use (e.g. by SOEs), the lease fee is waived for lessees.

The main barrier of the process is to identify the landowners and negotiation with them on the compensation for land use, especially for customary lands. Multiple individuals can still claim land rights after the announcement of infrastructure projects, so the identification of the appropriate person to negotiate is generally arduous.

(4) Resettlement Policy Project

MLHS just started two years a project "Developing planned relocation guidelines in the context of slow and sudden-onset disasters" with International Organization of Migration (IOM) in the first half of 2019, focusing on relocations in the context of either slow or sudden onset of natural disasters. The project will also make a recommendation for additional areas of policy development and guidelines outside of its scope. The migration/relocation for infrastructure project would, hence, become a part of the project taking account of nationally Determined Contribution (NDC) to the United Nations Framework Convention on Climate Change (UNFCCC).

2-4-5 Challenges of Power Development Plan in Honiara Grid

SP is aggressively promoting the introduction of solar power to improve the renewable energy ratio. The total capacity under the current plan is approximately 21 MW, and if constructed as planned, the 25 MW of solar PV will be connected to the Honiara grid by 2030.

However, since the capacity of PV is larger than the demand of the Honiara grid, measures to stabilize the power system are necessary to realize this planned introduction amount. BESS (Battery Energy Storage System) and EMS (Energy Management System) can contribute significantly to system stabilization. This section describes the system operation using BESS and EMS.

(1) Introduction of EMS

If 7.27 MW of PV is introduced into the Honiara grid by 2025 under the SP plan, it is likely that PV output will exceed the power demand during of-peak daytime hours. The Tina Hydropower project is scheduled to become operational by 2025, so it is necessary that by then the Honiara to either: (a) supply PV only, or (b) reduce the output from the PV and operate the DG synchronously with the minimum output.

When supplying only PV, as in option (a), in order to maintain the voltage and frequency of the system, a self-excitation type PCS such as a smart inverter that can continue operation even when the system voltage disappears, and BESS equipped with an EMS control function would be required. In addition, since the fault current cannot be supplied from PV, EMS plus BESS with a virtual synchronous generator (VSG) function would be required.

As shown in option (b), in order to suppress PV output and minimize DG output to maintain synchronous operation, the system voltage can be measured on the PV side and output can be autonomously suppressed based on the setting. In addition, the introduction of DG with a minimum output and a demand-based DG power generation control system would be required. The minimum output of the four 2.5 MW generators already installed at the Lungga Power House is 0.2 MW. It is possible to operate with an output smaller than the normal DG, controlling both PV output and DG operations.

In either case, it is necessary to control and formulate the operation plan of DG and BESS based on the demand forecast and PV output forecast.

In order to achieve the SP target of 100% renewable energy supply based on SIG's policy, the output from PV will be used to the maximum extent. In this case, it is necessary to perform operation control according to above option (a). A system for monitoring and controlling the power plant has been installed at the Lungga Power House, and it is also possible to monitor the Honiara Power House. In addition to this existing power station monitoring and control system, an EMS will be introduced, which controls the DG, PV, Tina Hydropower, BESS, and substations including distribution lines connected to the grid.

The required function of the EMS will change according to the stage of PV penetration into the grid.

Until 2025, when the PV installation capacity is 7 MW, demand forecast, PV output forecast, and DG Economic Dispatching Control (EDC) functions will be required for the EMS.

If the PV capacity reaches 7 MW in 2025 and PV output exceeds the demand in the off-peak during daytime, it will be necessary to operate the system only by PV supply. At this time, in addition to the above functions, PV output control function, BESS charge/discharge control, and SOC (State of Charge) estimation/management function are required as a spinning reserve control. In addition, as a BESS

control to secure the system voltage and frequency, it is necessary to have a VSG function that performs autonomous operation and supplies fault current virtually that simulates the inertia of the generator.

After 2025 when the Tina Hydropower becomes operational, required functions for the EMS include further PV output control in the rainy season as well as an EDC function considering the generated amount by Tina Hydropower in the dry season and BESS control.

Table 2-12 Required Functions of EMS and Schedule of Introduction

Year	PV (MW)	Required functions of EMS
- 2024	4.27	Demand forecast, PV output forecast, EDC(for DG)
2025 -	7.27	PV output control, BESS Charge/Discharge control, SOC management, VSG
2030 -	25.27	EDC (Operation planning considering seasonal characteristics on HPP・DG・PV・BESS)

Source: JICA project team

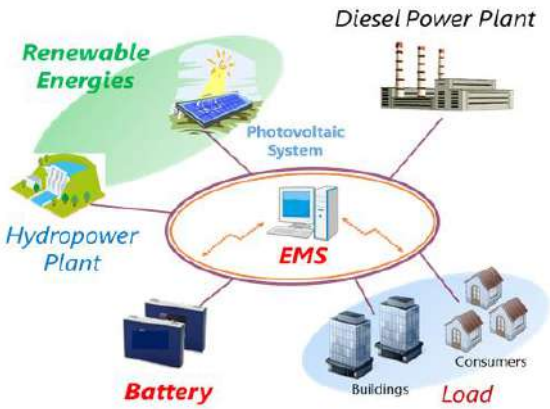

Source: JICA Project Team

Figure 2-11 Image of EMS Control System in Honiara Grid

(2) Introduction of BESS

BESS is classified broadly into two types: short-duration and long-duration. The roles of these types in power systems and how to estimate their capacities are discussed below.

(a) Power System Stabilization with BESS

Balancing between supply and demand is vital in stabilizing power systems. When supply exceeds demand, power system frequency goes up. On the other hand, when demand exceeds supply, the frequency goes down. Fluctuation of the frequency can affect demand side consumers as well as supply side such as power utilities' grid operation. In particular, one of the worst cases caused by a large range fall in frequency is a wide area outage. To avoid such accidents and supply stable power to customers, maintaining a balance between demand and supply is critical for grid operators.

In the past, collapses power supply used to be typically caused by demand fluctuations. In recent years, however, following the high penetration of variable renewable energy (VRE) such as solar power and wind power, instability in power supply can be caused due to weather-related events. To overcome such challenges, introducing BESS with appropriate capacity enables power systems to balance between supply and demand.

(b) Short-Duration Battery

BESS as a short duration countermeasure (less than 20 minutes) requires frequent repeat charging and

discharging during a very short range of period. Accordingly, the major characteristics required for a short duration battery is to be capable of charging and discharging quickly, repeatedly, and efficiently with high power (kW). An example of leveraging such BESS is to alleviate short-term fluctuations caused by variable renewable energy resources second-by-second. Calculating such BESS's output capacity (kW) requires parameters including acceptable frequency fluctuation rate, balancing capacity in the grid, and demand fluctuation rate.

(c) Long-Duration Battery

In a grid which has high share of solar PV in its energy mix, the generated energy could exceed actual demand for customers during daytime. In that case, BESS as a long-duration (more than 20 minutes) countermeasure can contribute to using renewable energy as efficiently as possible. Such BESS can charge with the surplus of solar energy, and discharge energy from solar during night-time when there is no sun. The capacity (kWh) of BESS should be determined in coordination with other generators which could serve as long-duration countermeasures. Moreover, consideration should be done on how long the battery needs to serve in a given period so as to estimate required capacity.

(3) Power System Operation

In general, more than 10% of PV penetration against power system capacity could impact on network voltage and frequency due to its unstable generation. To absorb the fluctuation, PV output prediction and demand forecast is essential. Introduction of an EMS with not only PV output prediction but also demand forecast, therefore, would be most suitable.

2-5 Power Development Potential

All current SP power development plans are solar, except for Tina Hydropower. In boosting the renewable energy share, large-scale BESS would be required if solar-only development is to be promoted. In addition, largescale solar power requires appropriate and sufficient land, but land acquisition is a major issue in SI as aforementioned. It is therefore desirable to develop renewable power sources other than solar power as much as possible. This section describes the potential of developing biomass, wind and geothermal as well as hydro power excluding Tina Hydropower.

2-5-1 Hydropower

Since Solomon Islands has annual rainfall of over 3,000 mm and large mountainous land areas, its favourable hydropower potentials have been identified long ago. In Guadalcanal Island, several hydro potential surveys conducted from the period of the 1960s onwards have identified hydropower potential in 41 sites, with an average output of each site at 4,800 kW, totaling approximately 240 MW. The location of each hydropower site is shown in Figure 2-12 and the basic technical features are shown in Table 2-13 and Table 2-14.

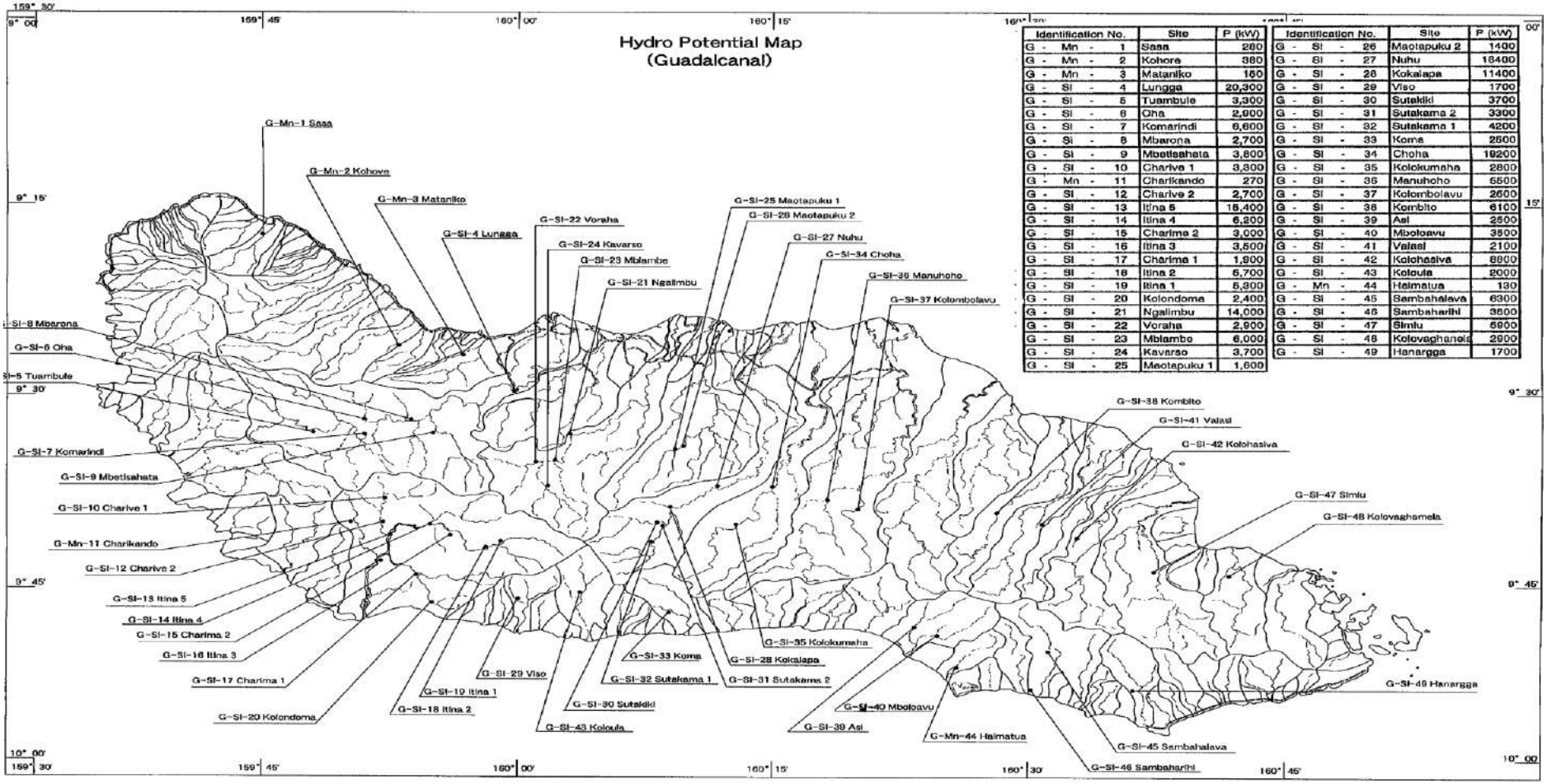

Identification No.	Site	P (kW)
G - Mn - 1	Sasa	280
G - Mn - 2	Kohore	380
G - Mn - 3	Matanliko	160
G - Sl - 4	Lungga	20,300
G - Sl - 5	Tuambule	3,300
G - Sl - 6	Oha	2,900
G - Sl - 7	Komarindi	6,600
G - Sl - 8	Mbarona	2,700
G - Sl - 9	Mbetisahata	3,800
G - Sl - 10	Charive 1	3,300
G - Mn - 11	Charikando	270
G - Sl - 12	Charive 2	2,700
G - Sl - 13	Itina 5	15,400
G - Sl - 14	Itina 4	6,200
G - Sl - 15	Charima 2	3,000
G - Sl - 16	Itina 3	3,500
G - Sl - 17	Charima 1	1,900
G - Sl - 18	Itina 2	5,700
G - Sl - 19	Itina 1	5,900
G - Sl - 20	Kolondoma	2,400
G - Sl - 21	Ngalimbu	14,000
G - Sl - 22	Voraha	2,900
G - Sl - 23	Mblambe	6,000
G - Sl - 24	Kavarso	3,700
G - Sl - 25	Maotapuku 1	1,600

Identification No.	Site	P (kW)
G - Sl - 26	Maotapuku 2	1400
G - Sl - 27	Nuhu	16400
G - Sl - 28	Kokalapa	11400
G - Sl - 29	Viso	1700
G - Sl - 30	Sutakiki	3700
G - Sl - 31	Sutakama 2	3300
G - Sl - 32	Sutakama 1	4200
G - Sl - 33	Koma	2500
G - Sl - 34	Choha	19200
G - Sl - 35	Kolokumaha	2800
G - Sl - 36	Manuhoho	5500
G - Sl - 37	Kolombolavu	2600
G - Sl - 38	Kombito	6100
G - Sl - 39	Asi	2500
G - Sl - 40	Mboloavu	3500
G - Sl - 41	Valasi	2100
G - Sl - 42	Kolohasiva	8800
G - Sl - 43	Koloula	2000
G - Mn - 44	Haimatua	130
G - Sl - 45	Sambahalava	6300
G - Sl - 46	Sambaharihi	3600
G - Sl - 47	Simlu	5900
G - Sl - 48	Kolovaghamela	2900
G - Sl - 49	Hanargga	1700

Source: Final Report for Solomon Islands Masterplan Survey, 2001.1, JICA

Figure 2-12 Hydro Power Potential Map in Guadalcanal Island

Table 2-13 Basic Technical Features for Hydro Power Potential in Guadalcanal Island (1)

Island: Guadalcanal

No.	Site	Type of Plant	classification	Catchment Area(km2)	Intake WL(m)	Tailrace WL(m)	Gross Head(m)	Discharge (m3/s)	Plant Output(kW)
1	Sasa	ROR	Mn	22	82.5	20	62.5	0.66	280
2	Kohove	ROR	Mn	14	280	160	120	0.4	380
3	Mataniko	ROR	Mn	34	80	60	20	1.0	150
4	Lungga	RES	SI	346	80	40	40	63.0	20,300
5	Tuambule	ROR	SI	34	420	320	100	4.4	3,300
6	Oha	ROR	SI	19	320	160	160	2.5	2,900
7	Komarindi	ROR	SI	133	220	140	80	11.1	6,600
8	Mbarona	ROR	SI	20	260	120	140	2.6	2,700
9	Mbetisahata	ROR	SI	39	290	190	100	5.1	3,800
10	Charive 1	ROR	SI	12	560	280	280	1.6	3,300
11	Charikando	ROR	Mn	10	240	120	120	0.3	270
12	Charive 2	ROR	SI	25	270	160	110	3.3	2,700
13	Itina 5	PON	SI	144	180	100	80	25.9	15,400
14	Itina 4	ROR	SI	76	260	190	70	9.9	5,200
15	Charima 2	RES	SI	43	120	80	40	10.1	3,000
16	Itina 3	ROR	SI	36	420	320	100	4.7	3,500
17	Charima 1	ROR	SI	18	230	120	110	2.3	1,900
18	Itina 2	ROR	SI	31	630	440	190	4.0	5,700
19	Itina 1	ROR	SI	17	1000	680	320	2.2	5,300
20	Kolondoma	ROR	SI	6	440	20	420	0.8	2,400
21	Ngalimbu	PON	SI	127	200	120	80	23.5	14,000
22	Voraha	ROR	SI	25	400	280	120	3.3	2,900
23	Mbiambe	PON	SI	30	400	250	150	5.4	6,000
24	Kavarso	ROR	SI	19	630	430	200	2.5	3,700
25	Maotapuku 1	ROR	SI	10	420	265	155	1.3	1,600
		sub total							117,280

Note : ROR-run of river,PON-run of river with pondage,RES-reservoir
SI (Small Hydro 1000kW～)
Mn (Mini Hydro 100～1000kW)
Mr (Micro Hydro ～100kW)

Source: Final Report for Solomon Islands Masterplan Survey, 2001.1, JICA

Table 2-14 Basic Technical Features for Hydro Power Potential in Guadalcanal Island (2)

Island: Guadalcanal

No.	Site	Type of Plant	classification	Catchment Area(km2)	Intake WL(m)	Tailrace WL(m)	Gross Head(m)	Discharge (m3/s)	Plant Output(kW)
26	Maotapuku 2	ROR	SI	22	202	140	62	2.9	1,400
27	Nuhu	PON	SI	111	350	240	110	20.0	16,400
28	Kokalapa	PON	SI	82	430	350	80	19.2	11,400
29	Viso	ROR	SI	17	300	200	100	2.2	1,700
30	Sutakiki	ROR	SI	24	590	430	160	3.1	3,700
31	Sutakama 2	ROR	SI	43	510	430	80	5.6	3,300
32	Sutakama 1	ROR	SI	33	640	510	130	4.29	4,200
33	Koma	ROR	SI	26	180	80	100	3.4	2,500
34	Choha	PON	SI	179	240	160	80	32.2	19,200
35	Kolokumaha	ROR	SI	48	300	240	60	6.2	2,800
36	Manuhoho	ROR	SI	67	242	157	85	8.7	5,500
37	Kolombolavu	ROR	SI	26	240	140	100	3.4	2,500
38	Kombito	ROR	SI	33	400	210	190	4.3	6,100
39	Asi	ROR	SI	13	221	20	201	1.7	2,500
40	Mboloavu	ROR	SI	18	240	40	200	2.3	3,500
41	Valasi	ROR	SI	26	240	155	85	3.4	2,100
42	Kolohasiva	ROR	SI	58	260	104	156	7.5	8,800
43	Koloula	ROR	SI	21	420	320	100	2.7	2,000
44	Haimatua	ROR	Mn	2.6	---	---	48	0.4	130
45	Sambahalava	ROR	SI	25	400	140	260	3.3	6,300
46	Sambaharihi	ROR	SI	20	200	20	180	2.6	3,500
47	Simiu	PON	SI	90	160	111	49	16.2	5,900
48	Kolovaghanela	ROR	SI	49	80	20	60	6.4	2,900
49	Hanargga	ROR	SI	37	106	60	46	4.8	1,700
		sub total							120,030
		total							237,310

Note : ROR-run of river,PON-run of river with pondage,RES-reservoir
SI (Small Hydro 1000kW～)
Mn (Mini Hydro 100～1000kW)
Mr (Micro Hydro ～100kW)

Source: Final Report for Solomon Islands Masterplan Survey, 2001.1, JICA

Many of these sites are not easily accessible by car due to the mountainous topography and their remoteness and are therefore not regarded as economically viable. In addition to this, land acquisition issues have resulted in no plans other than for the Tina Hydropower to date. However, when considering alternative power sources for expensive ones such as large-scale solar and BESS, there is a possibility that the economic efficiency could be re-evaluated. Experience of solving land issues has been gained through the Tina Hydropower has been gained. Taking a second look into the feasibility of hydropower development could be considered, based on the points mentioned above.

Prior to identifying the Tina River as the site of a potential hydropower project, two hydropower schemes were studied for other sites in Guadalcanal. These were the Lungga Hydroelectric Project, and the Komarindi hydropower Project. These two sites are located around Honiara in the hydro potential of Guadalcanal Island, and have an output scale of several MW or more. The locations of these two points are shown in Figure 2-13.

- Lungga Hydropower: Reservoir type, Installed capacity 20.3 MW
- Komarindi Hydropower: Run-of-river type, Installed capacity 6.6 MW

In addition to the above-mentioned two (2) sites, the hydropower potentials that can be connected to the Honiara Grid were selected and studied.

Source: JICA Project Team

Figure 2-13 Hydro Power Potential Map around Honiara

(1) Lungga Hydropower

The Lungga Hydro is a reservoir-type scheme that would have a 50-meter-high rockfill dam in the gorge of the Lungga River, about 9 km from Honiara, and would generate 20.3 MW of power. However, riverbed sediments at a depth of 65 m were found on the riverbed at the dam site, and limestone was found on the dam foundation, headrace tunnel, etc. The plan was not advanced.

[Main features]

- Installed capacity: 20.3 MW
- Catchment area (CA) at intake: 346 km^2
- Gross head: 40 m
- Design discharge: 63.0 m^3/s

(2) Komarindi Hydropower

The Komarindi Hydropower Plant, located on the Komarindi River, a tributary of the Lungga River, about 20 km upstream of the Lungga Dam, was studied and identified to have the most promising hydropower potential for some time. However, the Ngalimbui site on the Tina River, which was the basis for Tina Hydropower in the Solomon Islands, Guadalcanal Renewable Development Concept Study (February 2006, World Bank Project Power Mission) conducted by the World Bank, had the highest hydropower potential Thus, the Komarindi Hydropower Survey has been suspended. The long-distance access road to the proposed site would increase construction costs and the geology imposed challenges on cost and technical issues due to limestone distribution, and land acquisition issues. Nonetheless, this site is earmarked as a candidate following Tina hydropower. The basic specifications of the hydropower that have been studied in the past and the estimated project costs are as follows.

(a) Basic Information

- Maximum output (Installed Capacity): 6.6 MW
- Generated power (Energy Output): 45.5 GWh

- Catchment area (CA): 133 km^2
- Total head: 80 m
- Amount of water used: 11.1 m^3/s

(b) Project Cost

[Reference]
1) Based on ADB: According to Komarindi Hydropower Project, Final Report Feb. 1989,
   Project Cost: USD 20.1 million
   Construction unit price: About USD 3,000 /kW
2) Tina Hydropower
   Project Cost: USD 231 million
   Construction unit price USD 15,400 /kW

[Assumed cost]
Considering the construction cost of the access road due to poor accessibility to the site, the construction unit price of Tina Hydropower, which is higher construction unit price of the two, was applied for calculation.
Komarindi hydro project cost = USD 15,400/kW × 6,600 kW ≈ USD 102 million

Table 2-15 Estimated Monthly Generation by Komarindi Hydropower

Month	Generation	Average Output
	GWh	MW
January	4.31	5.79
February	4.20	6.25
March	4.59	6.18
April	4.31	5.98
May	3.96	5.33
June	3.05	4.23
July	3.20	4.31
August	2.81	3.78
September	3.12	4.34
October	3.81	5.12
November	4.02	5.58
December	4.12	5.54
Total/Average	45.50	5.20

Source: JICA Project Team based on KOMARINDI HYDROPOWER PROJECT FINAL REPORT, ADB, 1989

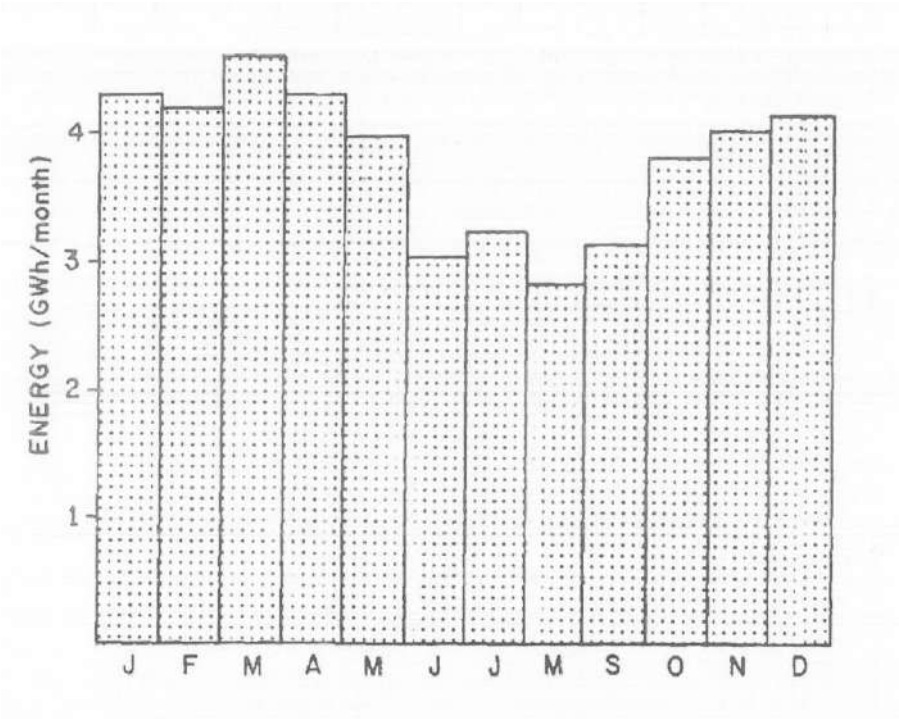

Source: KOMARINDI HYDROPOWER PROJECT FINAL REPORT, ADB, 1989

Figure 2-14 Estimated Monthly Generation by Komarindi Hydropower

(3) Other possible hydropower potential sites

In addition to the Tina hydropower and Komarindi hydropower, the following hydropower potentials were selected as the hydropower potentials that can supply electricity to the Honiara Grid on the condition that the sites are located within 30 km from Honiara and its output is over 1 MW. The locations of these two (2) hydropower sites are shown in Figure 2-15.

Source: JICA Project Team

Figure 2-15 Maotapuku 1 and Maotapuku 2 Hydropower Sites

[Maotapuku 1 hydropower]

The Maotapuku 1 Hydropower site is located on the Maotapuku River, a tributary of the Matepono River in central Guadalcanal Island and 28 km southeast of Honiara. It is estimated this scheme could generate 1.6 MW of output and 7,838 MWh of annual power by utilizing the river flow from a basin area of 10 km2. There would be a need for a 3.5km long access road from the existing Gold Ridge mine road.

The main feature are shown as follows;

River: Maotapuku River（Tributary of Matepono River）
Catchment Area: 10 km^2
River discharge：1.0 m^3/s （annual average discharge）
Gross head：155 m
Effective head：150.5 m
Designed discharge：1.3 m^3/s
Installed capacity：1.6 MW
Annual generation：7,838 MWh
Intake weir: 3.9m x 15.0 m (H x B)
Tunnel: 1.8 m x 1.8 m x 1,620 m (B x H x L)
Penstock: 700mm in dimeter, 531 m in length
Water turbine: Horizontal Francis (1unit)
Generator: Synchronous generator (1 unit)
Access road: 3.5 km in length
Project cost: USD 24.9 million

[Maotapuku 2 hydropower]

The Maotapuku 2 Hydropower site is located downstream of Maotapuku 1 hydropower site on the Maotapuku River, a tributary of the Matepono River in central Guadalcanal Island and 28 km southeast of Honiara. It is estimated this scheme could generate 1.4 MW of output and 6,619 MWh of annual

power by utilizing the river flow from a basin area of 22 km^2.

The main feature are shown as follows;

River: Maotapuku River（Tributary of Matepono River）
Catchment Area: 22 km^2
River discharge：2.2 m^3/s （annual average discharge）
Gross head：62 m
Effective head：58.4 m
Designed discharge：2.9 m^3/s
Installed capacity：1.4 MW
Annual generation：6,619 MWh
Intake weir: 3.9m x 15.0 m (H x B)
Tunnel: 1.8 m x 1.8 m x 1,400 m (B x H x L)
Penstock: 1200 mm in dimeter, 157 m in length
Water turbine: Horizontal Francis (1unit)
Generator: Synchronous generator (1 unit)
Access road: 5.8 km in length
Project cost: USD 27.0 million

(4) Hydropower potential site development schedule

The above-mentioned four hydropower sites of Lungga hydropower (20.3 MW), Komarindi hydropower (6.6 MW), Maotapuku 1 (1.6 MW) and Maotapuku 2 hydropower (1.4 MW) are potential hydropower candidate sites that can supply electricity to the Honiara grid.

The development schedule of these hydropower sites are assumed as shown in the below figure. Four (4) years are estimated as the pre-construction period, four (4) years are estimated as the construction period, resulting in eight (8) years in total, respectively. Assuming the project study will start in 2022, the hydropower plants would be able to operate in 2030.

Source: JICA Project Team

Figure 2-16 Whole Implementation Schedule of Hydropower Projects

2-5-2 Biomass

The feasibility of biomass power generation was investigated. The biomass fuels considered are wood and oil palm waste.

(1) Wood

From the interview with SP, it was confirmed that SP had conducted a preliminary survey on the feasibility of wood biomass power in the past. According to the results of this preliminary study, 10 MW of power output requires as large as 7,000 ha of forest land. It is very difficult to acquire such a large area of forests in and around Honiara. In the past, SP had a discussion with Kolombangara Forest Plantation Ltd (KFPL), a forest plantation company in Western State, about biomass power generation, but its generation cannot be expected to supply power to the Honiara system because it is an outer island away from the Honiara system. In this way, in the Honiara system, it is judged that the realization of Wood biomass power generation is difficult, just like SP's view.

(2) Oil palm waste

It was confirmed that SP had a discussion with Guadalcanal Plains Palm Oil Ltd (GPPOL), a palm oil production company in Guadalcanal Island, on the possibility of generating energy from the oil palm waste. In 2018, the company planned to generate 4-5 MW of power output and sell the excess power to SP. However, oil palm waste currently generates a limited amount of energy for the company's own energy consumption.
As mentioned above, at present there is very little production only enough to generate energy for the company alone. However, there may be a possibility that the oil palm waste will be able to generate power enough to supply electricity to Honiara Grid, if the production of palm oil will increase steadily. Regarding the possibility of biomass power generation from oil palm waste, it is recommended to continue to monitor trends in palm oil production and conduct a detailed feasibility study.

2-5-3 Solar PV

New large-scale solar power development is planned by SP. Further development of solar PV can be one option to achieve RE 100%. However, further land acquisition has been regarded as impractical by SP and MMERE given the land issues in the country. Solar PV generates only in the daytime, and the maximum output can be obtained only for a limited time. Therefore, if the required amount of power needs to be stored in storage batteries for night time, a considerable amount of solar panels will need to be installed.

SI has the dry season and the rainy season, and if the above-mentioned Tina Hydropower comes into operation, most of the power supply during the rainy season can be covered by the hydropower plant. Thus, it is assumed that excessive PV installation leads to excess power generated during the rainy season, making it difficult to use the generated energy efficiently. Therefore, it is considered necessary to develop a renewable power source that replaces PV, such as the aforementioned another hydropower and biomass.

2-5-4 Wind Power

Since wind energy increases in proportion to the cube of the wind speed, it is necessary to select a location with good wind conditions to improve the economics of wind power generation. The standard is that the average annual wind speed is 7 m/s or more according to New Energy and Industrial Technology Development Organization (NEDO). It is generally known that wind conditions near the equator are not very good. Detailed studies on the potential of wind power have not been conducted in SI. As indicated in Figure 2-17, although there are places where the wind speed is expected to be 8 m/s or more in the southern part of Guadalcanal Island and part of the mountainous part in the western part outside the Honiara grid, the wind speed around the Honiara grid (northern central part of Guadalcanal

Island) is about 2.50 m/s inland and 5.0 m/s offshore.

Solomon Islands National Energy Policy states that the levelized cost of electricity (LCOE) for solar power in remote area is estimated at USD 0.24/kWh, while the LCOE for wind is estimated at USD 0.50/kWh. This indicates that wind power is not currently regarded as a promising renewable power source in SI. Therefore, wind power is not considered in this study.

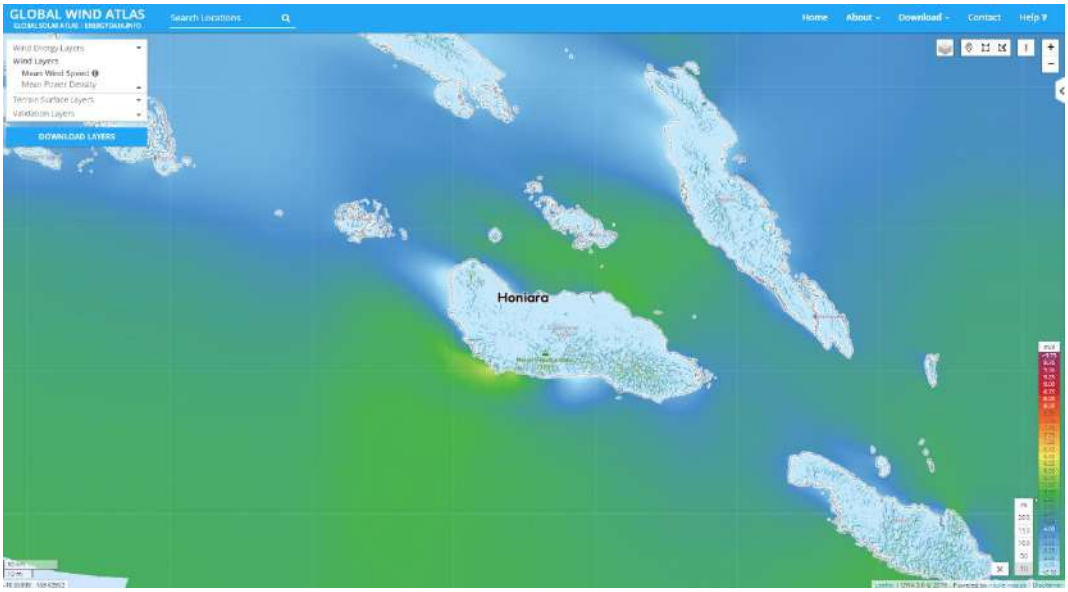

Source: GLOBAL WIND ATLAS

Figure 2-17 Wind Situation around Honiara at 10 Meters in Height above Sea Level

2-5-5 Geothermal

No geothermal potential has been identified so far on Guadalcanal Island, where the Honiara grid is located. It is said that Savo Island, which is 60 km away from Honiara, has a geothermal potential of about 11 MW. However, it is assumed that approximately 60 km of submarine cable would need to be laid to connect to the Honiara grid. A feasibility study for the geothermal power of Savo Island has not been conducted to date, and its economics and technical feasibility are unknown. Therefore, geothermal is not considered in this study.

2-5-6 Power Potentials in Honiara Grid

As for the renewable energy power source in the Honiara grid described in the previous section, we conducted a screening analysis of the generation cost based on assumptions.

Since no feasibility study has been carried out on biomass, data on the possibility of ensuring continued fuel supply and fuel procurement prices are not available. Therefore, it is not possible at present to design a development scenario based on this calculation result for biomass potential power.

Table 2-16 Potential Power Generation Cost in Honiara Grid

Type of Potential	Fuel cost (USc/kWh)	USc/kcal	Heat rate	Plant factor	Investment cost (USc/kW)	Life time (Year)	Power Generation Cost[5]	
							Cost (USc/kWh)	Capacity factor
Diesel	25.64	1.16	39%	8–80%	1,220	25	32.4	24.7%
HPP	0	-	-	0-60%	15,400	60	27.6	59.4%
PV	0	-	-	18%	2,600	25	19.8	18%
BESS	0	-	-	0-25%	3,510	15	145.8	2.3%

Source: JICA Project Team based on public information

2-6 Challenges for RE 100% Supply

2-6-1 Securing Spinning Reserve Capacity

With the introduction of PV, there can be no room for DG operation during off-peak hours. Furthermore, there will be no DG running when RE100% is achieved, excluding for backup. Hydropower is also assumed to run out of automatic frequency control (AFC) reserves in the dry season. For this reason, BESS introduced in the Honiara grid should equip with virtual synchronous generator (VSG) function to ensure stable operation during the dry season.
When examining the necessary period, the time when the PV introduction volume exceeds the off-peak demand will be identified by simulating the off-peak demand and supply situation. The required spinning reserve is assumed to be supplied by a short-duration storage battery. The required capacity is calculated using algebraic method which has been applied in Japan, since there is no fluctuation data for demand and PV output in the unit of 1-15 seconds for Honiara grid.
The long-duration storage battery capacity as peak shift to achieve RE100% is calculated by supply and demand simulation in consideration of the power system situation during off-peak hours.

2-6-2 Supply Capacity Development in Dry Season

In the power development currently planned by the SP for hydropower 15 MW and PV 21 MW, the amount of power generated from renewable power sources is insufficient for the demand expected in 2030 with a 2% annual growth rate. This means further renewable development will be needed to achieve RE 100%. At this time, PV is a realistic renewable power source that can be developed.
On the other hand, other research on renewable energy development potential based on literature suggests that wood biomass may be promising in terms of price and supply. However, there are many uncertainties such as whether a fuel supply system can be built. It is unknown at present whether sufficient power generation can be secured. Therefore, it is recommended to conduct a separate power source potential survey other than PV, such as biomass and hydropower, separately from this project.

2-7 Current Situation in Private Investment

The current business environment and challenges for promoting private investment in SI are preparation of the Guidelines for foreign investors, clarification of Land Issues in the renewable project development phase and preparation of single-window facilitator within SIG for independent power producers (IPPs). To overcome those challenges and attract private investors to SI, the project risks shall be identified clearly and their allocation among stakeholders are clarified by formulating a comprehensive guidelines. The following points should be considered and clarified in particular;

- Suggestion on Land Issues;
  The data collection of available lands and recognition to national ‘interest’ project of solar PV are

[5] For Sinario3

proposed in consideration to barriers for procurement of lands.

- Introducing small- and medium-scale Solar;
  Third party ownership model, operated in US, Japan, Fiji and other countries, are discussed and introduced as alternative option for land acquisition.
- Study and Promotion of Private Investment;
  IPP guidelines are drafted inconsideration to a reasonable risk allocation, targeting private sector participation into the power market. Sector reform of the power sector is also considered.
- Review of HR Development;
  Establishment of IPP office is proposed under the director of energy. Training scheme for engineer is also considered for capacity building.
- Scrutinizing investment capability to SP;
  B/S, P/L and C/F are studied to examine investment capability of SP.

2-8 Relating Laws for Implementation Promotion

The Electricity Act is expected to change regulator authority and abolition of standby charge aiming private investment.

(1) Electricity Act (Cap 128)

The Electricity Act (1969; amended in 1982) and its subsidiary legislation legally underpin SIEA for establishment, incorporation, functions, duties, financial provisions and electricity supply regulation.

(2) Foreign Investment Act

The Foreign Investment Act was enforced in 2005 and amended in 2009 to provide for registering and monitoring foreign investors in SI.

(3) Companies' Act

The Companies' Act was put in force in 2009 to provide for the formation and governance of private, public and community companies.

(4) Tariff Regulation (2016)

The Electricity Act (1969) states Minister of MMERE fixes electricity tariff on recommendation of SIEA. Current tariff regulation (2016) has been effective since 2017. The electricity tariff is structured with base tariff and fuel-related tariff. The base tariff is calculated by operation costs and regulated asset basis in regard to local inflation. Fuel-related tariff has a mechanism to adjust fluctuation in fuel price. Both base tariff and fuel-related tariff are reviewed and adjusted monthly basis.

Chapter 3 Study on Enabling Technology for Renewable Energy

This chapter develops outline of enabling technologies to be possibly integrated into the Honiara grid, and indicates timeline toward 2030.

3-1 Enabling Technology for Renewable Energy

Huge amount of variable renewable energy (VRE) penetration into power grid has many challenges to be tackled. Along with technology development, countermeasure against output fluctuation of the renewables has been grown. Hereunder, possible enabling technologies to boost renewables are shown.

Introducing enabling technology can allow renewables to grow its ratio in a power grid. Renewable energy to be introduced into the Honiara grid is assumed to be almost all PV power generation except for Tina Hydropower. When aiming RE 100%, it is necessary to introduce a considerable amount of PV. On the other hand, since PV is regarded as a variable power source, various restrictions are imposed on its mass introduction. The following enabling technologies could, more or less, contribute to alleviating the restrictions and maintaining the resilience of the system.

With the expansion of VRE, “flexibility” becomes an important requirement. Flexibility for power system refers to quick response to fluctuations in power supply and demand. In particular, in order to make maximum use of renewable energy, whose output is easily influenced by weather and season, it is necessary to build an electric power system that can cope with the uncontrollable output fluctuations.

To secure flexibility, there are two measures: (a) one is to improve flexibility on the grid side (power supply side), and (b) the other is to improve flexibility on the demand side. The former includes improvement of responsiveness of existing DG, and introduction of BESS and EMS. Regarding the responsiveness of the existing DG, 4 units (2.5 MW per unit) in Lungga Power House, which was introduced in 2016, have minimum output of 0.2 MW, a sufficient output suppression range. For the latter measures on the demand side, technologies related to demand response can contribute to the improvement of flexibility. Below, we outline the enabling technologies for the introduction of renewable energy on the supply and demand side.

3-1-1 Enabling Technology on Supply Side

(1) Battery Energy Storage System (BESS)

Introduction of battery energy storage system (BESS) is promising to stabilize the power system against mass PV penetration. Vast variable renewables connection to the grid makes it difficult to maintain a balance between supply and demand due to output fluctuation greatly depending on weather. Thus, it is required to store the surplus power of PV in BESS and to cover the insufficient power of PV, or even Tina Hydropower, by the discharge of BESS.

BESS is generally classified into short-duration type, which can provide high output power, and long-duration type, which has a large capacity to discharge for a relatively long time period. The former type is mainly represented by lithium ion battery, and the latter sodium-sulfur battery or flow battery. Whether the combination of both types of storage batteries is needed or not will depend on the supply and demand simulation as well as the operation of Tina Hydropower Plant. Thus, it is necessary to develop a BESS introduction plan along with comprehensive consideration. Table 3-1 summarizes main features of typical BESS.

Table 3-1 Comparison of Major Battery Features

	Lead acid	Sodium sulfur	Lithium ion	Flow(Redox)
Energy density (Wh/kg)	167	780	360	103
Battery efficiency (%)	85	90	95	85
System efficiency (%)	75	80	86	70
Life in cycles	4,500	4,500	3,500	100,000
Suitability for short duration			x	x
Suitability for long duration	x	x		x
Initial investment cost	105 – 475	263 – 735	200 – 1260	315 – 1050

Source: Prepared by JICA Project Team based on public information from NEDO and IRENA

(2) Smart Inverter

Variable renewable energy (VRE) and BESS are generally connected to the power system via an inverter. A smart inverter is an inverter that has function of monitoring the frequency and voltage of the power system and autonomously controlling the input and output of active power and reactive power based on the observed values, and that is applicable to PV systems and BESS. In addition to such power control, there is also a function for the inverter to disconnect the power when the power system is cut off (independent operation detection function). It also has a function (Fault-Ride-Through: FRT) that keeps connecting to the system without disconnecting when the frequency or voltage drops due to a failure accident in the system, which contributes to maintaining the stability of the system. Furthermore, the communication function enables remote setting changes of these parameters as well as connecting and disconnecting remotely.

A synchronous generator, such as thermal, hydro and diesel, has rotation force, namely inertia, contributing power system stability to absorb rapid fluctuation of demand and to supply sufficient ampacity to activate protection relay in substations in the event of outage accident. On the other hand, conventional inverters used with solar, wind power and battery have no inertia, and they need to be connected with a grid that a synchronous generator provides inertia.

In recent years, however, inverters that can provide with pseudo inertia has been developed and introduced into actual islanded power system, capable of forming grid without a conventional generator. Leveraging such cutting-edge inverter in the Honiara grid can boost renewable energy share, maintaining system stability.

(3) Energy Management System (EMS)

As mentioned in 2-4-5 expected EMS functions for the Honiara grid contains demand forecast, PV output forecast, economic dispatching control (EDC), PV output curtailment, BESS SOC management, virtual synchronous generator (VSG).

(a) Demand Forecast and PV Output Prediction

Accurate Prediction for demand and PV output contributes to formulating appropriate generation planning.

Output of variable renewable energy, such as solar and wind power, highly depends on the weather. Accordingly, predicting this output accurately in combination with EMS can mitigate the impact of the fluctuation and ensures the stable supply. In addition, the more precisely the prediction is, the less balancing capacity is needed, which will contribute to optimization of the balancing capacity power and consequently saving investment for power system development.

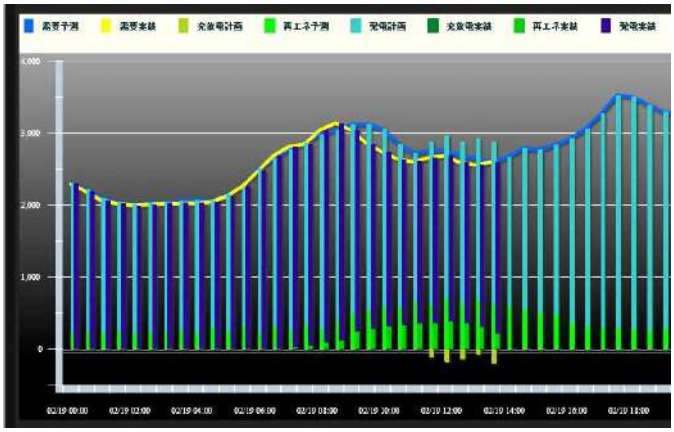

Source: TEPCO

Figure 3-1 Sample Image of EMS Control Application

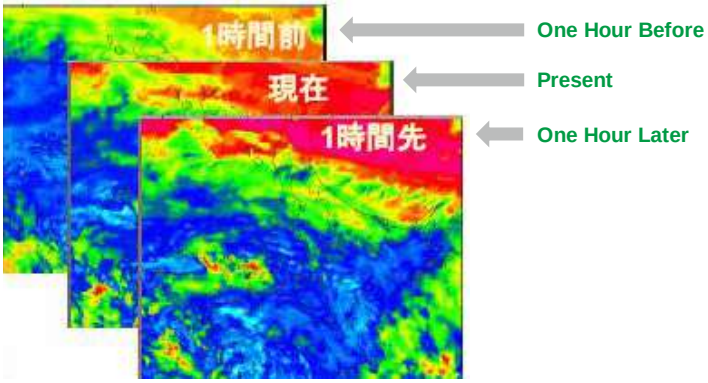

Source: Japan Weather Association

Figure 3-2 Weather Forecasting System (Image)

(b) Economic Dispatching Control (EDC)

Economic load distribution control (EDC) is to control the generator output by calculating the economical output distribution of each generator with different efficiency according to the change of the power demand. Generally, this control and load frequency control (LFC) are combined to control the generator output.
In the Honiara grid, electricity will be supplied to customers by DG, PV, hydropower, and BESS in the future. Thus, it is necessary to combine these power resources with forecasting technology to operate them most economically.

(c) PV Output Curtailment

Technology that suppresses PV output by an external command can be applied relatively easily as a countermeasure against excessive PV output. However, it is not a desirable operation method since renewable power generation without emission is suppressed even if it can generate more. It is necessary to consider how to efficiently use the PV power output without waste by properly operating BESS and other power sources.

(d) BESS State of Charge (SOC) Management

When introducing BESS, it is important to select the functions of the energy management system (EMS). When using long-period BESS and short-period BESS in combination, the characteristics of BESS are different, so it is desirable that the EMS to be introduced be capable of controlling both BESS appropriately.

In order to operate multiple BESS efficiently, it is necessary to automatically create a BESS charging and discharging plan after considering the demand forecast and PV output forecast described above to realize efficient energy operation desired. Specifically, EMS creates a charge and discharge plan such as when and how much capacity to charge to and discharge from BESS, how much free capacity of BESS should be secured in order to use surplus power reducing waste as much as possible.

(e) Virtual Synchronous Generator (VSG)

With the increase in the number of distributed renewable energy power systems connected by inverters in recent years, the decrease in the transient stability of the system has become a problem. Most renewable energy sources connected by inverters have little or no mechanical rotary inertia force, stator leakage flux, and electrical braking force by the braking windings. Virtual synchronous generator (VSG) can create virtual inertia by simulating the transient electrical output of the synchronous generator by the equation of motion of the synchronous generator. VSG can contribute to maintaining transient stability in microgrid where the majority of distributed renewable energy generator is connected by inverters.

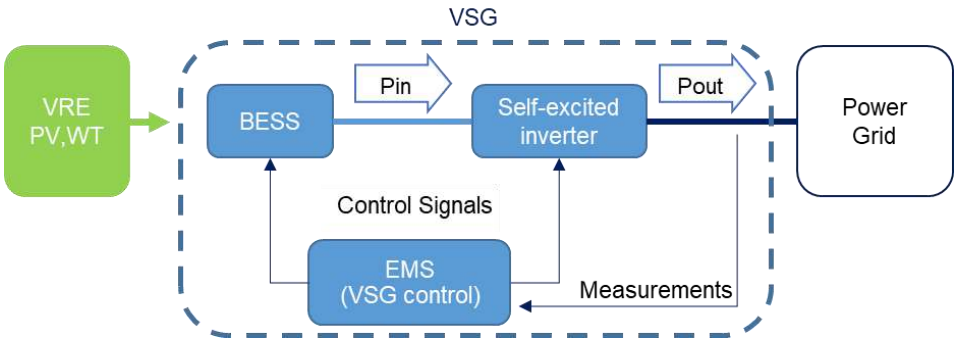

Source: JICA Project Team

Figure 3-3 System Concept of Virtual Synchronous Generator

(4) Microgrid

A micro grid is a small-scale supply network that realizes a stable supply of energy such as electricity and heat by integrally controlling multiple VREs and controllable power sources in a certain demand area. In the microgrid, distributed power sources including demand response (DR) are connected to each other by information and communication technology (ICT) and are controlled in a unified manner. A plurality of supply and demand facilities are regarded as one aggregate and are connected to the electric power system.

As mentioned at the beginning of this chapter, it is necessary to secure the flexibility of the power system for the mass introduction of renewable energy. Securing flexibility not only on the supply side but also on the demand side can contribute to a reduction in system countermeasure costs. On the supply side of the Honiara grid, improvement of flexibility can be achieved by constructing a microgrid, which is controlled by EMS for the existing DG, large-scale PV, Tina hydropower and BESS equipped with smart inverter in a comprehensive manner.

Looking at the demand side, it is possible to further improve flexibility by utilizing a customer who has a device that supports DR, which is described later, for supply and demand adjustment. In order to realize this, it is necessary to build a microgrid that incorporates even the customers who will participate in DR, and centrally control it with EMS. The construction of such a microgrid will contribute to the expansion of renewable energy by improving the flexibility of the entire system that integrates the supply side and the demand side.

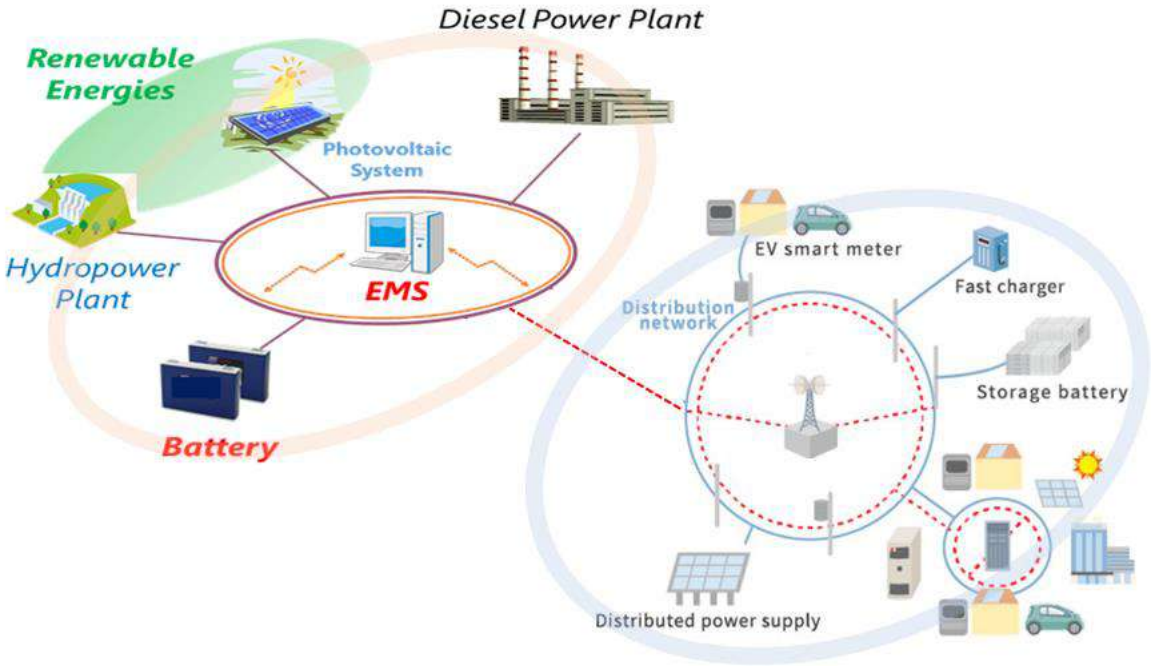

Source: JICA Project Team

Figure 3-4 Concept Image of Microgrid Control by EMS

On the other hand, generally, a range that can be regarded as a microgrid is wide, and for example, the purpose is to supply electric power to a non-electrified village or a remote island, and those not connected to the grid are included in the microgrid. In SI as well, power is already being supplied by PV+BESS+DG microgrid systems in parts of the remote islands and parts of the Guadalcanal Island outside the Honiara grid.

In 2017, the electrification rate in SI is only 12%, and even in Honiara, the capital in SI, it reaches only 64%[6]. To improve electricity access for customers, microgrid system composed of solar PV and BESS could be a promising technology as power supply. Microgrid system does not need to be connected to an existing conventional distribution network system, which can suppress capital investment for power system network development. SI will have been working on expanding introduction of renewable energy and improving access to the power for Solomon Islanders. Developing microgrid system will largely contribute to achieving not only increase of renewables, but also improvement of electrification.

3-1-2 Enabling Technology on Demand Side

(1) Advanced Metering Infrastructure (AMI)

By introducing smart meters (SM) for the customers in the Honiara grid, demand data per a certain period of time (e.g. 30 minutes) can be aggregated with advanced metering infrastructure (AMI) system. Analyzing these data will contribute to visualizing power demand. AMI allows to grasp the power flow directing to the grid side due to distributed energy resources such as rooftop solar, EV, and battery storage installed on the customer side. Such distributed energy resources can generate export flow from the demand side to the grid side. SM plays an important role to measure the export energy in addition to import energy from the conventional grid side to the customer side. The AMI solution would enable highly accurate demand forecast, which contribute to optimizing development plan for renewable energy to be introduced.

AMI is desirable to be established prior to the introduction of demand response described in the next section, given that the SM integrated system contributes to the support of energy use efficiency, such as visualization for energy saving, power saving, and demand side management.

[6] MMERE, Solomon Islands National Energy Policy and Strategic Plan

In addition, by installing an SM on the secondary side of the distribution transformer (11kV/400V) and analyzing the measurement data in combination with the measurement data of the SM on the customer side, it can help detect power theft and fraud, which will lead to non-technical loss reduction.

(2) Demand Response (DR)

Along with the introduction of a large amount of variable renewable energy, demand response (DR) is expected to be a valuable role to cope with volatile fluctuation and a supply-demand gap.

Time of Use (TOU), namely establishing a difference in the electricity price between daytime, nighttime and season, is a kind of demand response, possibly inducing the use of electricity during low-cost hours.

Since heat pump equipment and below-mentioned EV are regarded as DR resources with excellent flexibility and responsiveness, they are expected to be used as supply and demand balancing capacity. However, due to its small individual balancing capacity, these DR resources are expected to be combined in coordination with other enabling technologies. Furthermore, prevalence progress of DR resources in Honiara and proper fusion with EMS that can control them should be considered.

DR resources expected in Honiara in the future would contain freezer and refrigerator of Tuna can manufacturer, pumping facility of water utility company (Solomon Water), and e-mobility including electric vehicle. Some possible DR resources in Honiara are tabulated as below.

Table 3-2 Comparison of Demand Response Resources Candidate in Solomon Islands

Object Equipment	Water and sewer pump	Freezer and Refrigerator	Water Heater	Electric Vehicle
Load Control	Shift running hour	Shift from over cooling at night to load following operation Stop cooling during a short range of time	Demand control by shifting running hour	Demand control by charging and discharging battery storage
Flexibility	Low	Low	High	High
Demand Control				
Decrease	suitable	suitable	suitable	suitable
Increase	suitable	suitable	suitable	suitable
Correspondence				
Within 10 minutes	moderate	suitable	suitable	suitable
Within 1 hour	suitable	suitable	suitable	suitable
The day before	suitable	suitable	suitable	suitable
Duration				
Decrease	Several hours	1 hour	10 to 20 hours	Around 4 hours
Increase	Several hours	Half day	10 to 20 hours	Around 4 hours
Season	Throughout the year			
Time	Daytime and Night time			

Source: JICA Project Team created from public information

(3) Electric Vehicle (EV)

Since an electric vehicle (EV) is equipped with a storage battery, it needs to be connected to an electric power system for charging. Vehicle-to-Grid (V2G) has attracted attention as a technology for discharging an EV's battery to the power system and supplying power to the grid side. By connecting EVs to the grid and operating them appropriately as part of virtual power plant (VPP) mentioned below, it can serve as not only a storage battery for the grid but also supply and demand balancing capacity.

In addition, it is desirable that transition from conventional gasoline or diesel vehicles to EVs come along with renewables. Charging EVs with electricity derived from non-fuel energy can contribute to reducing CO_2 emissions, leading to improving environmental superiority.

(4) Virtual Power Plant (VPP)

Virtual power plant (VPP) is a technical system that controls various energy resources such as distributed power generation, battery storage, and customers' DR resources on demand side in an integrated manner, functioning as if it were a single power plant. For instance, the above-mentioned EVs, household rooftop solar power and storage battery, air conditioning system and water heater can serve in the VPP. These devices are expected to be leveraged for balancing supply and demand, controlled with telecommunication and IT technology. Demonstration projects as to VPP have been developed both in Japan and overseas.

3-2 Case Study of Enabling Technology

Depending on the share of renewable energy introduction, Pacific countries can be divided into three groups (Table 3-3). SI belongs to the Group 1, and it can be said that it is a stage where the active introduction of the renewable energy power supply is required. To achieve the 100% of renewable energy share in the future, introduction of batteries and/or EMS systems can be considered.

Table 3-3 Introduction of Renewable Energy in Pacific Island Countries

	Groups 1	Groups 2	Groups 3
Renewable Energy Share	Low (less than 10%)	Medium (10-60%)	High (60% or more)
Country and Region	Non-group (1) (2)	Tuvalu Main Island (Funafuti), Tonga Main Island (Tongatapu), Samoa (Upol Island), Hawaii (Kauai)	Tuvalu's Remote Islands, Cook Islands, American Samoa (Tau Island)
Typical System	・Cooperation only of renewable energy equipment ・Strengthen of the grid system as needed	・EMS ・System stabilization equipment (batteries, etc.) ・High-speed DG	・Group (1) (2) System ・Introduction of systems according to the scale of the grid system, etc.

Source: JICA Project Team created from public information

It is expected to play a major role in improving the share of renewable energy by using the EMS technology and its case studies are in Table 3-4. In the Pacific, Tuvalu and the Marshall Islands are mentioned as examples. Both cased are used solar power systems and EMS control technology to stabilize the output.

Table 3-4 Examples of Introduction of Renewable Energy and EMS Technology

No.	Country	Years	Participating Companies	Remarks
1	Japan (Miyako Island)	2011	Toshiba Corporation	-
2	Indonesia (Sumba Island)	2016	Kyudenko Co., Ltd.	MoE subsidy project
3	Japan (Niijima, Shikinejima)	2017	NEDO, TEPCO Holdings Co., Ltd., TEPCO Power Grid Co., Ltd., TAKAOKA TOKO Co., Ltd.	-
4	Tuvalu (Main Island)	2018	-	-
5	Maldives (Hitadu Island)	2019	Nishizawa Co., Ltd., Toshiba Energy Systems Co., Ltd.	Japan Fund for Bilateral Credit System (JF JCM)
6	Marshall Islands (Ibai Island)	2019	-	-
7	Cuba (Youth Island)	2019	-	JICA Grant project

Source: JICA Project Team created from public information

Some projects in Japan, such as in Niijima and Shikinejima, has introduced EMSs that control diesel power generation, multiple VRE power sources and battery storage equipment in an integrated manner, aiming for system stability by supply and demand control leveraging renewable output forecast and energy storage. Those projects has demonstrated stable power system operation maintaining system frequency. The experience and technologies will contribute to achieving RE 100% in SI whose power system is similar to an island power system Japan conducted demonstration projects.

To improve the ratio of renewable energy, it is important to develop a system that utilizes renewable energy on the demand side in addition to the introduction of renewable energy power to the supply side. We have organized the case of e-mobility (EV), refrigeration facilities, and water supply equipment, which is a system that can be expected to spread in the island countries of the Pacific in the future. There have been several cases for remote islands in the Pacific, and in 2019, a program for the Pacific, supported by international organizations, was established.

Table 3-5 Example of Introduction of Renewable Energy Utilization System on the Demand Side

No.	Country	Years	Overview
1	Tonga (Haapai Islands, Tongatapu Islands)	2014-2015	Delivery of photovoltaic water supply facilities for remote island villages (supported by PIGGAREP+ and IUCN)
2	Marshall Islands	2015	Social demonstration experiment of EV+AC ordinary charger by Honda Motor Co., Ltd.
3	Japan (Koshikijima)	2015	Joint demonstration project of PV+ battery (EV reuse battery) by Satsumasendai City, Kagoshima Prefecture and Sumitomo Corporation (Some utilize the MoE's subsidy project)
4	Fiji (Vanua Levu etc.)	2015	Hybrid solar generation (PV+DG) for fishery support by delivering refrigeration systems
5	Tonga (Babau Islands, Paapai Islands)	2017	Delivery of photovoltaic water supply facilities (22 units) and photovoltaic refrigeration facilities (36) to villages through PEC support
6	Oceanic island countries	2019	UNIDO and GEF-supported e-mobility promotion programs in the Pacific Region. Led by PCREEE/SPC, the budget is 5 million euros In the long term, a business model such as V2G/G2V can be considered
7	Indonesia	2019	Utilizing NEDO support, Honda Motor Co., Ltd., Panasonic Co., Ltd., Pacific Consultants Co., Ltd., PT. HPP Energy Indonesia demonstrate battery sharing system for e-mobility

Source: JICA Project Team created from public information

3-3 Identification of Applicable Technology for Honiara

In order to achieve the RE 100% supply target of SP based on the policy of the SIG, maximizing the output from PV will aim in the future operation for the Honiara grid. The expected introduction time of the applied enabling technology to the Honiara grid is summarized below.

This study covers only applicable technologies related to generation and stable supply in the electric power sector. Regarding other global greenhouse gas emission sectors, the study considers the significant electrification of transportation, especially the increase in electric power demand due to the spread of electric vehicles over time. This study recognizes the need to develop a similar long-term plan to coordinate and integrated approach in policies, implementation systems, and financing, with the electric power sector in the field of electrification by land transport. Since the specific policy for electrification of the land transportation sector has not been clarified, it is difficult to consider in detail the coordination with the power sector, so it is not included in the study.

The operation status of the Honiara grid will change significantly due to the growth of electric power demand, the amount of installed PV, and the development of the Tina Hydropower Plant based on the SP development plan. In response to this change, it is necessary to introduce system stabilization technology.

Table 3-6 Operation Status Changing in Honiara Grid

Year	PV (MW)	Changes of Honiara grid operation status
- 2024	4.27	・ DG supplies energy and ancillary services
2025 -	7.27	・ PV output forecast, Charge/discharge control of BESS(SOC), VSG
2030 -	25.27	・ EDC (formulation of supply and demand plan considering the seasonal operation of HPP / DG / PV / BESS)

Source: JICA Project Team

(1) Until 2024

DGs supplies electricity and spinning reserve for PV output fluctuation until 2021. Of these DGs, four units (2.5 MW per unit) installed at the Lungga Power House have a minimum output of 0.2 MW per unit, which is smaller than that of a normal DG unit. Thus, economical DG operation control should be performed along with PV output control. For this purpose, it is necessary to formulate and control the economic load dispatching control (EDC) of DG based on the demand forecast and PV output forecast.

Currently, SP's operators are performing pattern dispatching based on their experiences. It is effective to improve the efficiency of DG by introducing EDC. There are two ways to introduce EDC at this stage: one is to train operators by capacity building, and the other is to introduce and utilize EMS that has the function of demand forecast, PV output forecast and DG operation control.

(2) 2025 - 2030

With the full-scale operation of Tina Hydropower, it will be necessary to deal with the hydropower accidents during the rainy season and at night. Especially in the case of a transmission line accident during the rainy season, a maximum loss of 15 MW for three units is expected. Since the maximum electric power in 2025 is assumed to be 18.4 MW, it is expected that the demand will be about 10 MW during off-peak hours, which is 60% of the maximum electric power. In this case, it is assumed that the operating generator is only Tina Hydropower. It is desirable to integrally control the load shedding, the generator control, and the supply of spinning reserve from BESS in the event of a severe incident such as an accident on the transmission line to Tina Hydropower.

- Microgrid (on the supply side)

A microgrid consists of DG, PV, Tina Hydropower and BESS in the Honiara grid, and the EMS controls a generator and transmission line and distribution line in an integrated manner. As a result, it is expected that the EMS will be able to restore a system accident and ensure the nighttime supply capacity in the dry season by the EDC function.

- EDC (EMS)

After the start of operation of Tina Hydropower, DG will gradually decrease. Thus, it is necessary to replace DG with BESS, especially during the dry season at night. On the other hand, BESS is also required to realize the function as a virtual synchronous generator (VSG) during daytime, so the charge and discharge control of BESS by the EDC function and SOC (State of Charge: SOC) of EMS.

If 25.27MW of PV is introduced into the Honiara grid by 2030 under the SP's original plan, there is a high possibility that PV output would exceed the power demand during the daytime during off-peak hours. Since Tina Hydropower is scheduled to start operation in 2025, it will be necessary some device to maintain the system frequency and voltage and supply fault current when power from only PV is supplied. It is necessary to introduce a virtual synchronous generator (VSG) system to maintain the system frequency and voltage and to supply fault current when the synchronous generator is not connected to the system. The VSG system consists of EMS and BESS.

- VSG

When the synchronous generator is not connected to the grid, the EMS measures the frequency and voltage changes in the grid and controls the BESS output in order to maintain the grid frequency/voltage and supply fault current. The EMS virtually outputs the simulated inertia of the synchronous generator from BESS to stabilize the system.

- EMS

In addition to PV output forecast and output control, a demand forecast function and a virtual synchronous generator function are provided.

- BESS

The BESS is equipped with a smart inverter that can operate autonomously to realize the virtual generator function.

(3) After 2030

After the commission of Tina HPP, the share of renewable energy supply will exceed 90%. However, in order to achieve 100% supply from renewable energy, it is necessary to develop nighttime supply capacity in the dry season.

At present, a power source that can be realized is PV+BESS peak shift supply. The PV capacity factor is 18%/year, and the overall charging/discharging efficiency of BESS is about 85%. Therefore, in addition to the existing plan (21.27 MW) for the 2030 section, a further 25 MW of PV development is required. Even in the existing plan (21.27 MW), the land for 17 MW has not been secured, and it is difficult to secure a PV land for 25 MW. In addition, because it is developed for the purpose of peak shift, it is necessary to construct transmission and distribution facilities that do not directly contribute to the supply of demand (20.3 MW in 2030) if the charging current flows through the grid during the off-peak hours in the daytime. For this reason, it is appropriate to connect the transmission line from peak shift PV to a nearby 11 kV or 33 kV substation and install the BESS on the same bus bar as the PV transmission line of the substation. As a preparation, it is necessary to prepare the substation design and the scale of the PV transmission line (up to 4 MW from the SP standard wire specifications). When the peak shift PV is used as an IPP scheme with private investment, grid connection technical guidelines (voltage regulation, independent operation prevention device, FRT, etc.), power purchase conditions (simultaneous same amount standard, not purchased during rainy season) etc.) should be prepared before the PPA negotiation.

- Biomass and Hydropower potential survey

Except for PV and hydropower, sufficient potential studies have not been conducted on renewable energy such as biomass. Regarding hydropower, the potential surveys conducted in the past have not been updated, and it is not possible to select a site following Tina HPP. Therefore, it is recommended to carry out potential surveys on oil palm waste, and update of past surveys for hydropower to aim at starting operation after 2026.

- DR

With regard to the introduction of DR, it is necessary to set incentives, introduce ICT technology that links electric utilities and consumers, and visualize power consumption with smart meters. As mentioned in the previous section, diversifying the electricity rate menu and encouraging change in the power consumption pattern on the consumer side can also be called a kind of DR. After the start of Tina hydropower operation, electricity rates will be reduced and electricity consumption can be expected to increase. Diversification of electricity tariff menus and visualization of electricity usage by introducing smart meters are thought to contribute to raising awareness of energy conservation among consumers. If such a DR is introduced around 2025, it may contribute to the suppression of demand peaks.

On the other hand, regarding DR, which links electric utilities with consumers under aggregator intervention, the demand scale of customers is currently small, and the introduction of externally controllable home appliances is not progressing. Since the effect of DR on supply and demand

operations appears when the collective control is performed, it is considered that realization in recent years is difficult. However, the introduction of the e-mobility (EV) mentioned above, stationary storage batteries for home use that reused the old EVs' battery, and rooftop solar, or the introduction of controllable technology into freezing warehouses and water supply facilities, etc. It is also conceivable to invite demonstration projects related to demand side management and to introduce DR on a trial basis in urban areas where demand is relatively high.

- EV

EV dissemination policy includes setting penetration targets, regulating and mandating CO_2 emission reductions, and financial incentives (subsidies, etc.). Currently, there are no SI government's specific goals for EV introduction. In order to spread EVs, it is necessary to develop the battery collection system, charging infrastructure, ICT technology to harmonize with the power system, and technical standards and guidelines related to these.

In Fiji, a neighboring island nation, electric buses were introduced in 2018, and the 2018 UN report[7] mentioned the introduction of electric taxis. In Marshall Islands, Honda Motor Co., Ltd. conducted a feasibility study on the introduction of EV charging-related equipment and systems in March 2016. Similarly, a feasibility study could be conducted in SI, and a trial run with public transport electrification could increase public awareness for EV.

Since electric power is required for charging an EV, it is desirable that the charging power be derived from renewable energy. When EVs come to Honiara, it would be suitable after 2024 since the renewable energy share in the Honiara grid would be greatly improved by the start of Tina Hydropower operation.

Around 2025, the price of EVs is expected to be cheaper than the same class of internal combustion vehicles. And by 2030 at the latest, EVs are expected to be cheaper than internal combustion vehicles in almost all passenger car types. With such price declines and the spread in advanced EV countries such as China and Europe, it is expected that the distribution amount in the EV market will increase, and the introduction of used EVs in SI can be expected. In general, the difficulty of an EV used car is that the cruising distance is reduced due to a decrease in charging and discharging efficiency. However, considering the small size of the country, it is assumed that a long cruising distance is not required, and it is presumed that relatively inexpensive used cars have sufficient utility value.

- Microgrid (demand side capture)

As mentioned above, a microgrid centrally controlled with EMS, can contribute to ensuring flexibility on the supply side, incorporating the existing DGs, PV, Tina Hydropower, and BESS. In addition to this, incorporating distributed power sources on the demand side into the microgrid allows for greater flexibility, which will drive further renewable energy.

Specifically, after the AMI (smart meter) secures communication with the demand side, consumers having DR resources including EV (for example, Solomon Water, a water supply utility having a pump station) are incorporated into the microgrid. Centrally controlled with EMS, the microgrid constructed in this way will function as if it were a single power plant (VPP), which will allow renewable energy share in the Honiara gird to expand further.

[7] Urban Pathways Steps to Actions Fiji Mobility, 2018

Chapter 4 Examination of the Renewable Energy Development Scenario

4-1 Electric Power Demand Forecast

Through discussion with SP based on the actual records of power demand, the demand forecast up to 2030 was based on the annual growth rate of 2%/year as a standard (base case) and 4%/year of growth rate as a high demand case (high case). Figure 4-1 shows a graph of estimated power sales including transmission and distribution losses as a transmission end power demand (GWh), and Figure 4-2 shows a graph of peak demand (MW) forecast.

In the base case with an annual growth rate of 2%/year, the power demand at the transmission end is estimated to be 107.9 GWh in 2030, and in the high case with an annual growth rate of 4%/year, the power demand is estimated to be 136.3 GWh in 2030.

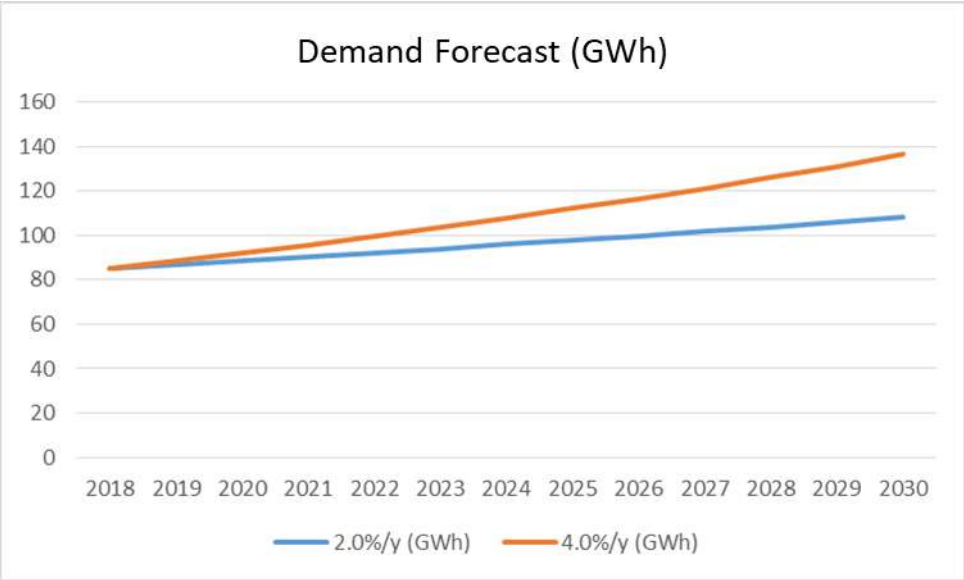

Source: JICA Project Team based on data obtained from SP

Figure 4-1 Estimation of Transmission End Power Demand in Honiara Grid

The peak demand (MW) is estimated using the Honiara grid actual load factor of 60.7% in 2018. The SP's present plan and interviews show that there is no large customer such as factory investment or resort development in the Honiara grid for the time being. It is anticipated that the power usage would not change significantly by 2030, and assumed the peak demands would be followed the actual load factor. In the base case (2%/year), the peak demand in 2030 is estimated to be 20.3 MW. In the high case (4%/year), the peak demand in 2030 is estimated to be 25.6 MW.

The daily load curve used for the supply and demand balancing simulation is created on the demand forecasts, using actual load curves on the peak demand day, the average on weekdays, and the off-peak (weekend) in October 2018.

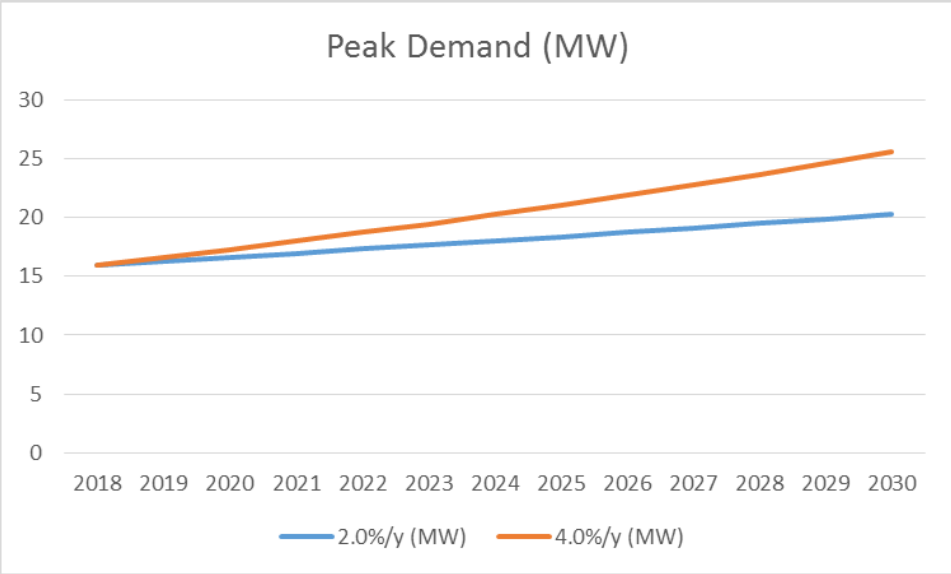

Source: JICA Project Team based on data obtained from SP

Figure 4-2 Peak Demand Forecast

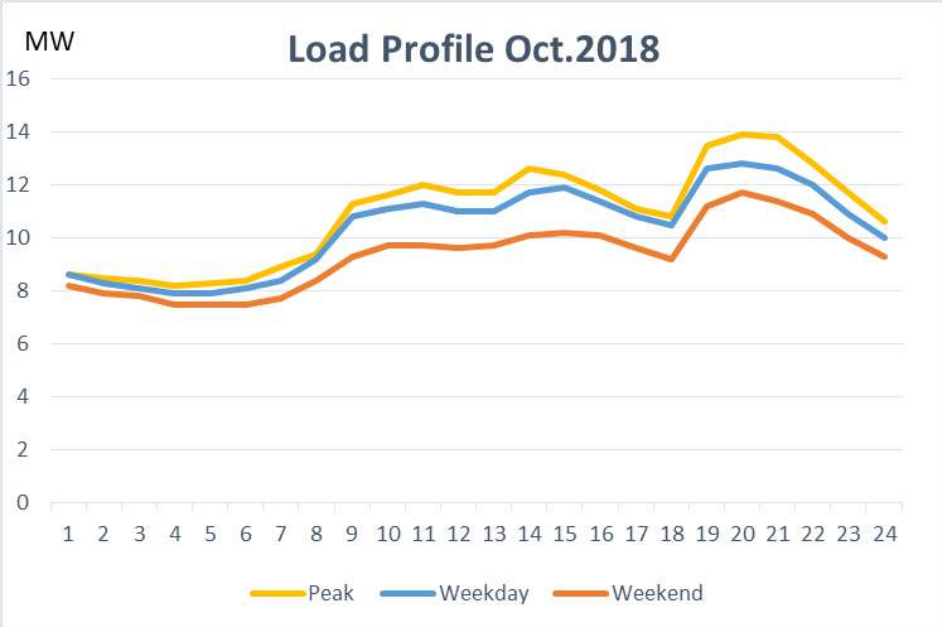

Source: JICA Project Team based on data obtained from SP

Figure 4-3 Daily Load Curves in Honiara Grid (October 2018)

4-2 Power Development Plan

As mentioned in Chapter 2, the power facilities by 2030 will be 19.1 MW of diesel power, 21.27 MW of PV and 15 MW of hydropower, for a total of 55.37 MW. However, looking at the load curve, the peak demand is at night, so PV has no output during night peaks. Hydro also assumes that the supply capacity during the dry season could be 10 MW. Therefore, the nighttime supply capacity during the dry season will be 29.1 MW. The following table shows the existing power supply facilities up to 2030 and the planned power supplies.

In the power demand base case (2%/year), the peak demand is assumed to be 20.3 MW in 2030, so a reserve capacity of 8.8 MW has been secured from the supply capacity in 2030. The maximum unit

capacity is 3-5MW, depending on the hydropower operation situation. The reserve capacity is considered to be 8.8 MW, so the reliability of N-1 criterion for power supply generations is secured.

On the other hand, the PV installed capacity will be 21.27 MW by 2030, which is exceeding the estimated peak demand of 20.3 MW in 2030 in the base case. For this reason, during the off-peak in daytime, PV outputs could be exceed the demand. Since the PV output cannot be operated beyond the demand of the power system, it is necessary to suppress the PV output by PCS or store it by BESS to increase the demand. Therefore, after 2022, when PV is installed on a large scale, it is necessary to analyze the supply and demand balance situation during off-peak periods to confirm the necessity of BESS.

SP has planned to introduce a centralized BESS, and is conducting bidding for a consultant who performs FS and design and construction management for the introduction of BESS.

Table 4-1 Existing Power Plants and Power Development Plan

Sites	Unit	Type of Generator	Capacity (MW)	COD / Decommission
Lungga	L1	Diesel	2.5	2016 / 2039
	L2	Diesel	2.5	2016 / 2039
	L3	Diesel	2.5	2016 / 2039
	L4	Diesel	2.5	2016 / 2039
	L6	Diesel	2.2	1998 / 2024
	L7	Diesel	3.8	2005 / 2036
	L8	Diesel	3.0	1993 / 2024
	L9	Diesel	3.8	1999 / 2029
	L10	Diesel	3.8	2006 / 2036
Honiara	H1	Diesel	1.5	2013 / 2038
	H2	Diesel	1.5	2013 / 2038
Fighter 1	-	PV	1	2016 / 2041
Ranadi	-	PV	0.05	2014 / 2039
Henderson Extension	-	PV	2	2020 / 2045
Ranadi Rooftop	-	PV	0.22	2020 / 2045
Tanagai	-	PV	1	2021 / 2046
Foxwood	-	PV	4	2022 / 2027
Lungga SDA	-	PV	4	2022 / 2027
Tenaru	-	PV	4	2022 / 2027
Tasahe	-	PV	2	2023* / 2048*
Makira	-	PV	3	2024* / 2049*
Tina	3	Hydro	15	2024 / 2084*
				* as assumption

Source: JICA Project Team based on SP information

4-2-1 Costs for Diesel Generation

When comparing the economics of biomass power generation, it is necessary to examine the cost of diesel power generation, which is an avoidable cost. Table 4-2 shows the calculation data and specifications for diesel generation costs.

Table 4-2 Calculation Data and Specifications for Diesel Generation

Items	Data and conditions
Fuel price	USD 1/liter
Heat rate (MJ/liter)	35.9 MJ/liter
Calorific value (kcal/liter)	8,600 kcal/liter
Generation Efficiency	39%
Construction cost	USD 1,220/kW
Life time	25 years

Source: JICA Project Team based on SP information

4-2-2 Costs for Solar Power Plant Development

Table 4-3 shows the EPC costs of a 1 MW sola power system based on the data SP kindly provided to the Project Team. The cost related to solar power plant construction is USD 2,600/kW in actual value. This includes system connection costs and project management costs. According to an interview with the SP, the cost of EPC only is USD 1,769/kW, and Table 4-3 indicates it is USD 1,800/kW. The O&M cost is USD 6/kW-year (SBD 50,000/MW-year) and the project life time is 25 years.

Table 4-3 EPC Cost for Munda 1 MW Solar PV Project

EPC for 1MW PV SYSTEM				
Main Parts	Item Description	Totals	Totals	Comments
EPC PV SYSTEM	Solar Panels	USD 587,500.00	USD 1,325,000.00	PV EPC cost per kW is SBD14500 or USD180(
	PV String Inverters	USD 162,500.00		
	System Integration	USD 237,500.00		
	Panel Mounting Structure	USD 275,000.00		
	Control & Monitoring	USD 62,500.00		
	Design Services	USD 187,500.00	USD 187,500.00	
	Civil Works	USD 150,000.00	USD 300,000.00	
	Solar Panel Installation	USD 93,750.00		
	Inverter Installation	USD 18,750.00		
	Testing & Commissioning	USD 37,500.00		
CONNECTION TO EXISTING GRID	11kV Cables and spare conduits	USD 300,000.00	USD 500,000.00	Grid Connection within 2km distance
	1.25MVA Step Up Transformer 0.415kV/11kV			
	Installation & Commissioning	USD 200,000.00		
		TOTAL	USD 2,312,500.00	
		UXO Clearances	USD 62,500.00	
		Project Management	USD 187,500.00	
		GRAND TOTAL	**USD 2,562,500.00**	

Source: SP

4-2-3 Supply and Demand Situation based on Existing Power Development Plan

Based on the demand forecast (base case), power generation development plan (see Table 4-1), and fuel cost specifications of diesel power generation, the supply and demand balance is simulated as below. The supply and demand balancing simulation has been calculated using PDPAT-II, which has been used by TEPCO for more than 40 years.

(1) Present plan, supply and demand balance situation in 2030 in the demand-based case

Figure 4-4 shows the supply and demand situation during the rainy season of March, 2030. From the results of the supply and demand simulation, it is estimated that the PV output exceeds demand in the daytime. In this case, some measures such as suppressing the output of the PV or introducing a BESS having a virtual synchronous generator (VSG) function are required. Due to its characteristics, power system operation cannot be maintained with PV alone. In order to operate only with PV supply, it is necessary to prepare spinning reserve that absorbs the combined fluctuation of PV output and power demand of the system. However, when only PV is supplied, the power increase control cannot be performed instantaneously, so that it is not possible to secure a spinning reserve. Also, if the PV is connected by an inexpensive separated-exciting PCS, operation cannot be continued when the system

voltage drops during a system failure. When the PV is disconnected from the grid, the fault current is not provided, so the system protection relay does not operate and the fault point is not removed. In this case, it is necessary to introduce BESS with VSG function. Therefore, it is necessary to analyze the supply and demand situation during the off-peak period after 2022 when a large amount of PV is installed, and to consider countermeasures. On the other hand, if BESS is not introduced, even in the rainy season, the supply capacity will be insufficient at the night peak, and it will be understood that supply by diesel power generation is necessary.

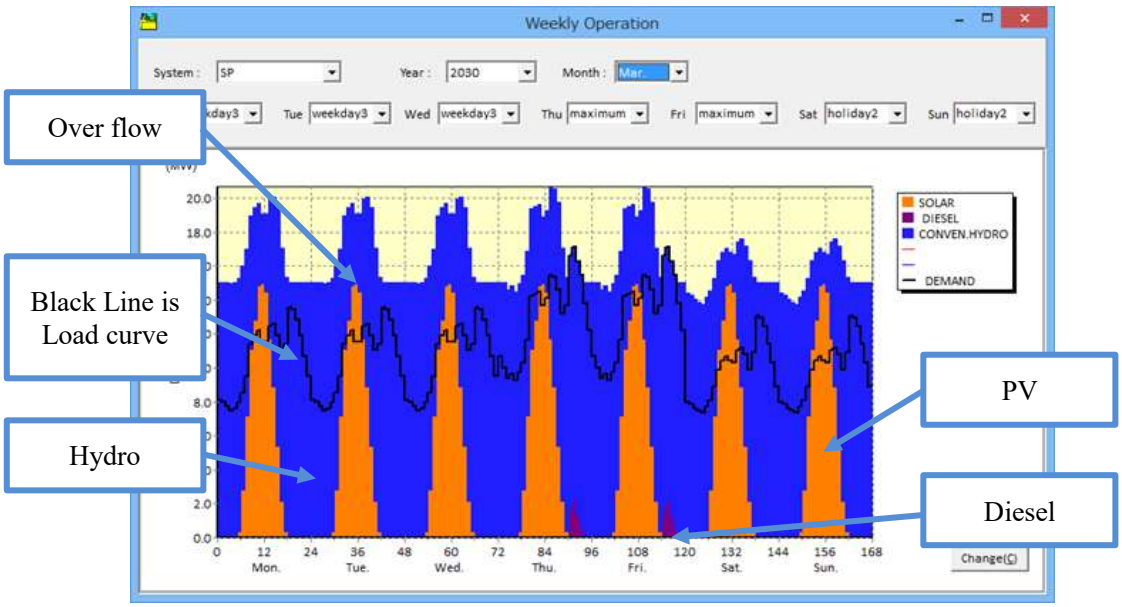

Source: JICA Project Team

Figure 4-4 Supply and Demand Balance of Present Plan, Base Case in Rainy Season (Mar. 2030)

Figure 4-5 shows the supply and demand situation during the dry season of 2030 (August). During the dry season, Tina's hydro output decreases, resulting in a shortage of RE supply at night. In 2030, about 16 GWh of electricity will be supplied annually by diesel power generation. It can be seen that in order to achieve RE 100% supply, it is necessary to develop an additional 16 GWh of RE in the year of 2030. The capacity factor for diesel power generation is estimated at 13.2%, and the fuel cost for power generation costs is estimated at USc 26.7/kWh.

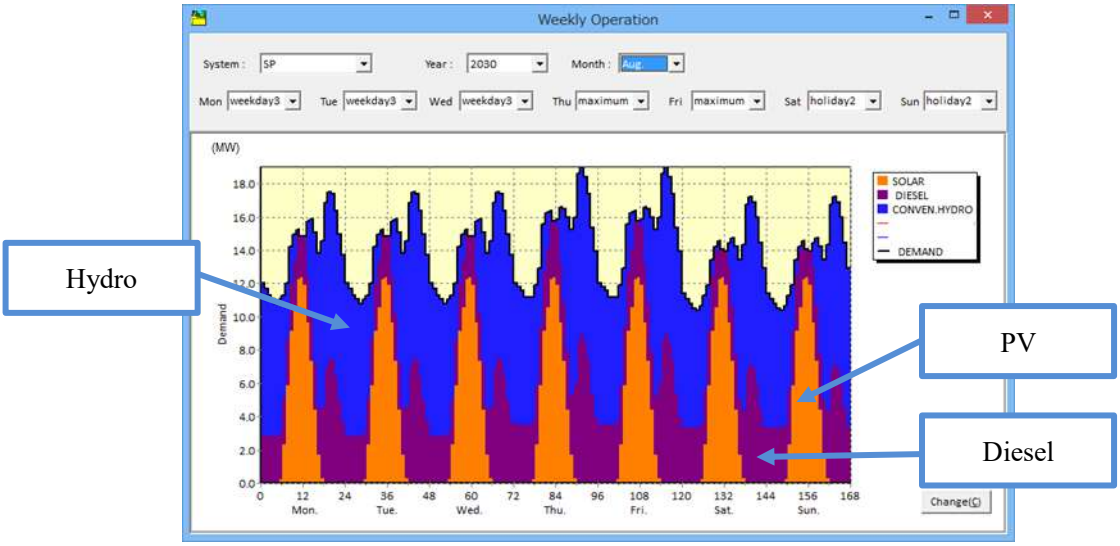

Source: JICA Project Team

Figure 4-5 Supply and Demand Balance of Present Plan, Base Case in Dry Season (Aug. 2030)

(2) Supply and demand situation of the present plan, base case in 2021 and 2022

Figure 4-6 shows the supply and demand situation for March 2021 and Figure 4-7 shows the supply and demand situation for March 2022.

Tina Hydro will be commissioning in 2024, and will be supplied by diesel and PV until 2023. Since the introduction of PV will increase significantly in 2022, it can be seen that the PV output capacity exceeds demand during off-peak hours. Even during peak demand, the room for diesel generator operation is as small as 0.3 MW, making it difficult to operate two diesel generators required to secure N-1 criteria.

For this reason, it is necessary to take measures to suppress PV output and/or to install a BESS equipped with a virtual synchronous generator (VSG) function.

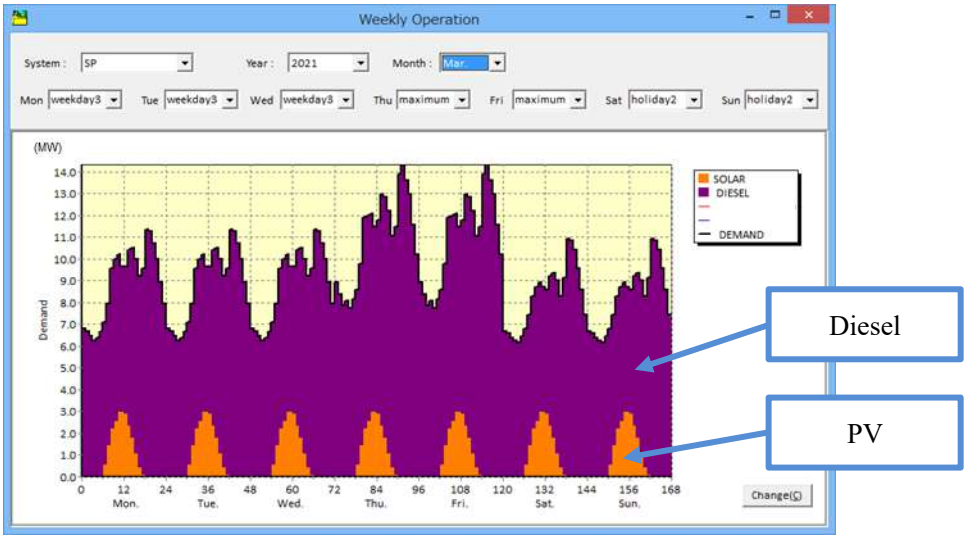

Source: JICA Project Team

Figure 4-6 Supply and Demand Situation of Present Plan and Base Case (Mar. 2021)

Source: JICA Project Team

Figure 4-7 Supply and Demand Situation of Present Plan and Base Case (Mar. 2022)

4-3 Evaluation on Renewable Energy Development Possibility

The government of SI has set a goal of achieving 50% RE share in the power sector by 2035 and 100% by 2050. For this reason, aggressive introduction of PV into the Honiara grid and introduction of centralized BESS as a policy are being promoted for system stabilization. However, currently known measures alone are not enough to achieve the policy goals in the following points.

- Insufficient power generated by RE during dry season
- Lack of RE supply capacity for nighttime peak demand
- Measures to stabilize the power system when supplied with RE100% (to secure spinning reserve and introduce VSG system)

To address these issues, the potential of RE development that can be connected to the Honiara grid is organized, and the target RE 100% supply policy is examined as below.
As described in Chapter 2, RE development potential in the Honiara grid includes PV and biomass (wood, palm shell). These economic and development issues is summarized.

4-3-1 Possibility of PV Development in Honiara Grid

The PV development plan currently being planned by the SP is 21.27 MW by 2030 as shown in Table 4-1.

Land acquisition is the most important issue for additional PV development. Required land acquisition has not been completed at most PV planning sites (see Table 2-10). Land acquisition is a major obstacle in PV development. In addition, as a cost to provide an ancillary service by SP for the PV system connection, an access fee, so-called the Standby Charge, is also a hindrance. As the amount of PV connected to the grid increases, the burden per PV capacity will decrease.

On the other hand, there is some unused land around the airport where the existing Fighter One is located, leaving room for further PV development.

4-3-2 PV Interconnection

Due to the small size of the Honiara grid, there are cases where the transformer of the distribution substation has a small capacity, and the capacity that can be connected to the same distribution line or the same transformer bank is limited. When a reverse power flow occurs in the transformer, there is a

possibility that the tap for adjusting the voltage or the associated relay that detects an accident and trips the circuit breaker may not operate normally.

In addition, if PV is connected to the terminal of the distribution feeder, a problem of voltage rise may occur. Therefore, it is necessary to consider measures such as introduction of a voltage adjusting device and use of a dedicated distribution line as necessary.

Since the Honiara grid is small in scale, when multiple large-scale PV is connected to the same distribution line, the supply capacity will be greatly reduced in the event of an accident on the distribution line, and blackouts may occur.

As a countermeasure, it is recommended to limit the power flow to 4 MW or less per feeder, based on the standard wire size used for 11 kV distribution lines. To align with this, it is thought that designing and standardizing PV and BESS to be less than 4 MW per feeder in total will make system operation easier.

4-3-3 PV Development Cost

Figure 4-8 shows the International Renewable Energy Agency (IRENA) prediction for the reduction in construction costs for large-scale solar power plants.

In the supply and demand simulation, the power generation cost was estimated using the reduced PV cost.

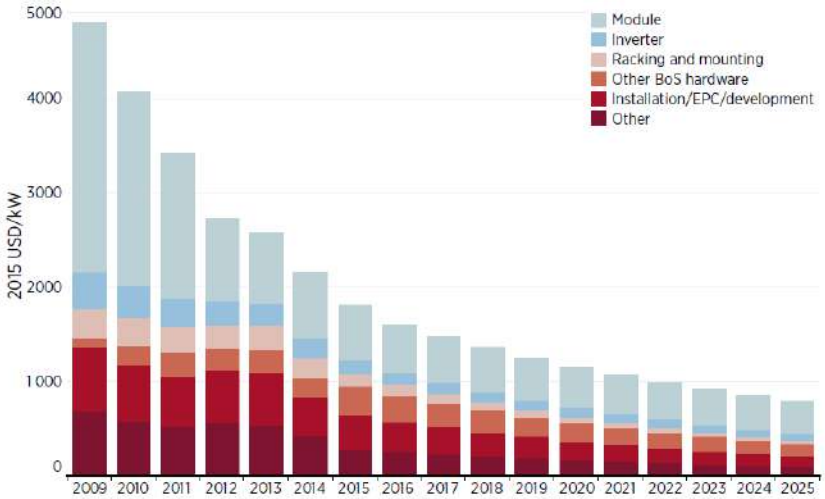

Source: IRENA

Figure 4-8 Cost Reduction Projection for Large-scale Solar PV Installation

We set the PV construction cost applied in the supply and demand simulation referring to the construction unit cost based on IRENA prediction and the actual construction cost in SI, USD 2,600/kW in 2018. As shown in Table 4-4, large-scale PV installation cost in SI is assumed USD 1,650/kW in 2025 and USD 1,510/kW in 2030.

Table 4-4 Cost Prediction for Large-scale PV Project in Solomon Islands (USD/kW)

Year	2018	2025	2030
PV Installation Cost in SI[8]	2,600	1,650	1,510
(Reference) IRENA Prediction	1,375	875 (64% compared to 2018)	800[9] (58% compared to 2018)

Source: JICA Project Team

4-3-4 Evaluation of Biomass Development Potential in Honiara Grid

As mentioned in section 2.5, in the Honiara system, it is judged that the realization of Wood biomass power generation is difficult.

Regarding the possibility of biomass power generation from oil palm waste, there may be a possibility that the oil palm waste will be able to generate power enough to supply electricity to Honiara Grid, if the production of palm oil will increase steadily. Regarding the possibility of biomass power generation from oil palm waste, it is recommended to continue to monitor trends in palm oil production and conduct a detailed feasibility study.

4-3-5 Hydropower Development in Honiara Grid

(1) Tina Hydropower

As described in 2-4-1 , a scenario analysis was conducted assuming that Tina Hydro Power operation would start in 2024. Even in the dry season, 6-hour 10 MW output would be possible. Table 4-6 shows the monthly output and power generation of Tina Hydropower.

Table 4-5 Tina Hydropower Monthly Output

	Jan	Feb	Mar	Apr	May	Jun	Jul	Aug	Sep	Oct	Nov	Dec
Output (MW)	15	15	15	10	10	10	10	10	10	10	15	15
Generation (GWh)	9	9	9	4.4	4.9	4.4	4.9	4.9	4.5	5	9	9

Source: JICA Project Team

(a) Operation of Tina Hydro

Tina Hydropower, which is a synchronous generator, basically operates continuously, maintains the system frequency, and plays a role in generating inertia. Although the installed capacity is 15 MW, it is assumed from the past rainfall records that the output may fluctuate greatly from season to season and may vary from a maximum of 15 MW to a minimum of about 3 MW. The basic operation policy of Tina Hydro, which is expected to start operation in 2024, is as follows.

- In the rainy season when the amount of power generation is large, the supply can be excessive with respect to the demand. Therefore, this surplus should be stored in the storage battery.
- In the dry season when power generation is small, supply capacity can be insufficient for demand, and this shortfall should be covered by PV plus BESS or diesel generator.

[8]The cost for 2018 was set based on the actual project cost value obtained from the SP. As for the costs in 2025 and 2030, we assumed that the construction cost in SI would decrease as the IRENA forecast, and applied the same cost reduction ratio as the IRENA forecast.

[9]Expected price as of 2030, assuming that price decline trend in Figure 4-8 would continue.

(b) Generation Cost of Tina Hydropower

The generation cost of Tina Hydropower was estimated at a discount rate of 10% according to SP and estimated from construction costs, expected operation period, and O&M costs. The calculation conditions and power generation costs are shown in Table 4-6.

Table 4-6 Calculation Conditions and Generation Cost for Tina Hydropower

Items	Calculation Conditions
Project Cost	USD 231 million
Project Cost excluding grant	USD 182 million
Total Output Capacity	15 MW
Construction Cost	USD 12,200/kW
Operation Period	60 years
O&M Cost	USD 122/kW-year
Generation Cost	USc 28/kWh

Source: JICA Project Team based on SP data

(2) Komarindi Hydropower

According to the feasibility study report[10] implemented by ADB, the installed capacity was estimated as 6.6 MW, and the annual generation capacity as 45.5 GWh. Based on the figures in the report, rated output operation is possible for around six hours per day throughout a year.

Table 4-7 Komarindi Hydropower Monthly Output

	Jan	Feb	Mar	Apr	May	Jun	Jul	Aug	Sep	Oct	Nov	Dec
Output (MW)	6.6	6.6	6.6	6.6	6.6	6.6	6.6	6.6	6.6	6.6	6.6	6.6
Generation (GWh)	4.31	4.2	4.59	4.31	3.96	3.05	3.2	2.81	3.12	3.81	4.02	4.12

Source: JICA Project Team

4-4 Introduction of BESS

The cost for BESS plus EMS to be installed newly to secure spinning reserve is set based on interviews with manufacturers. As a specification of the BESS, a lithium-ion battery capable of charging and discharging in a short time (full charging and discharging at least twice an hour) is set. It is necessary to install EMS at the same time to operate BESS effectively in preparation for only PV supply.

The peak shift BESS that also serves as long duration application should be capable of operating for 6 hours from 18:00 to 23:00 when night peaks occur as indicated in the load curve shown in Figure 4-3. Since the instantaneous charge and discharge function is not expected for the peak shift BESS, an inexpensive capacity-type storage battery was assumed in this study. Considering the transportation to SI, installation space, and O&M easiness, a lithium-ion type battery storage was assumed.

4-4-1 Interconnection of BESS

Since the Honiara grid is small in scale, in case an accident occurs on a distribution line which is interconnected with large-scale PV, the amount of power loss may be large and blackout may occur. To prevent this, the use of storage batteries is effective, but this installation location must be carefully selected. When installed on the same distribution line as such large scale PV, installed in the vicinity of PV, short-period fluctuations can be easily absorbed, which has the advantage of being able to mitigate

[10] Komarindi, ADB, 2001

momentary fluctuations in PV output. If an accident occurs in the distribution line, the BESS is disconnected from the system along with the PV, and it is not possible to cover the amount of PV dropped out. The most effective location to compensate for the loss in the Honiara grid is on the bus at the Lungga Power House. Depending on the PV installation place, consideration may be needed on establishing a new switchyard.

4-4-2 Costs of BESS

A lithium-ion battery that can be charged and discharged in a short time (full charge / discharge at least twice an hour) is expected to be used, and an EMS should be installed at the same time. The price for the short-duration BESS and EMS was set at USD 2,900/kW.

BESS for peak shift was assumed to have a capacity of 6 hours to cover from 18:00 to 23:00 when peak demand at night occurs. In addition, it is necessary to use a self-excited inverter that can operate as virtual synchronous generator. The long-duration BESS for peak shift was set at a price of USD 4,400/kW including delivery, local installation, and adjustment.

On the other hand, as pointed out in many reports, BESS manufacturing costs are expected to get cheaper and cheaper for the future. Therefore, based on the IRENA report, we estimated the price will be decline to USD 2,000/kW in 2030 with 15 years of service life.

The O&M cost of BESS using lithium-ion batteries is just the cost of battery cooling during operation, which is excluded from the overall efficiency of BESS (85%). On the other hand, no maintenance of the battery itself is required.

The O&M cost of EMS is fundamentally unnecessary unless there is significant change in power system configuration. Depending on the installation situation, it may be necessary to replace the base of the workstation.

As a sensitivity analysis, the case where the BESS price does not decrease in 2030 was examined.

4-5 Consideration of BESS Capacity Required

The supply and demand simulation aforementioned in 4-2-3 shows that BESS as spinning reserve provision would be needed by 2022. Therefore, we analyze the capacity of BESS required in 2022.Short duration fluctuation, which needs spinning reserve, is composed of demand fluctuation and PV output fluctuation. The analysis of the required amount of spinning reserve is examined using an algebraic method used in Japan.

The introduction timing of the peak shift BESS, which is also used for long duration countermeasure, is studied by conducting supply and demand simulations on off-peak period when generation from Tina Hydro Power and PV would exceed actual demand. The peak shift BESS capacity required is set to a capacity that can serve for 6 hours from 18:00 to 23:00 to meet night peak demand.

4-5-1 Algebraic methods

The algebraic method is a calculation that uses the allowable adjustment, the frequency response of the generator, the demand fluctuation rate, and the renewable energy fluctuation as parameters. It can calculate the renewable energy introduction capacity. The advantage of this method is that it does not require special tools, can be calculated using spreadsheet software, and does not require advanced knowledge and experience. The algebraic methods can allow relatively easily to evaluate the amount of variable renewable energy (VRE) that can be connected to the system, as well as the reserve capacity (BESS output capacity kW) required for VRE resources.

The algebraic method is a method that mathematically treats the standard deviation of demand fluctuation and PV output fluctuation as vector, and calculates the load frequency control (LFC)[11]

[11] LFC (load frequency control) means: control that transmits a control signal to the power plant by detecting the frequency

adjustment power required using a vector diagram when the allowable adjustment is given. Figure 4-9 shows an image of the algebraic method, which can be expressed by a mathematical expression as shown in Expression (1).

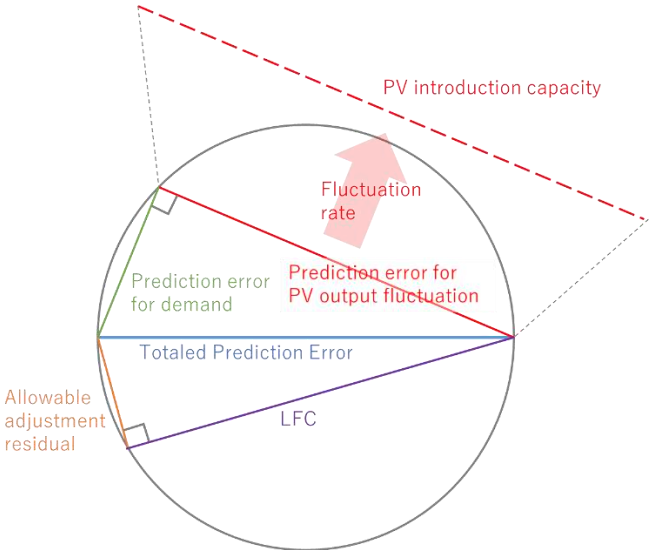

Source: JICA Project Team based on CRIEPI report

Figure 4-9 Image of Algebraic Method

$$\sqrt{(LFC)^2 + (Allowable\ \ adjustment\ \ residual)^2} = \sqrt{(Demand\ \ prediction\ \ error)^2 + (PV\ \ output\ \ prediction\ \ error)^2}$$

・・・Expression (1)

It is considered that there is no correlation between the demand prediction error and the PV prediction error. In this case, the angle between the two vectors is 90 degrees as shown in Figure 4-9. Similarly, the angle between the allowable adjustment and the LFC required is also drawn as 90 degrees. In the algebraic method, when the apparent fluctuation and the allowable adjustment are given, and if the reserve capacity can be controlled so that the relationship shown in Figure 4-9 is obtained, required LFC reserve capacity can be estimated as shown in this figure, that is, according to Expression (1). This state indicates an ideal state in which there is no excess or deficiency in the reserve capacity. It should be noted that the algebraic method results in a study are what is simulated with assumption of being under such an ideal state.

When using this algebraic method, it is necessary to consider the difference in the scale of the system under study and the scale of the renewable energy introduction area. One of the points to keep in mind due to the difference in system scale is that the allowable range of frequency fluctuations, system constants, demand fluctuations, etc. differ depending on the power company and power supply equipment. Therefore, if possible, it is desirable to understand the actual condition of the system by actually measuring it by a load shedding test and reflect it. Also, regarding the difference in area scale, in general, the larger the renewable energy introduction area, the greater the smoothing effect of the renewable energy fluctuation. Therefore, it is necessary to consider the difference and reflect it in the numerical value of the renewable energy output fluctuation.

When LFC reserve capacity, allowable adjustment, and demand fluctuation are set, the PV capacity that can be introduced can be estimated from the allowable solar fluctuation that satisfies Expression (1). It is also possible to evaluate the required BESS capacity by setting the rated PV capacity to be introduced and by considering the LFC adjusting power as the adjusting power of the BESS.

In this study, the necessary reserve capacity, namely BESS output required, was calculated based on the

deviation of the power system and fluctuations in the interconnection flow, and automatically controls the output of the power plant to maintain the system frequency at a reference value. It is responsible for LFC to correspond to frequency fluctuation during several minutes to 20 minutes of the frequency fluctuation period.

PV introduction plan of the SP.
The main parameters used in the algebraic method are as follows.

(1) System capacity

System capacity is the total amount of demand load in a power supply area. From the maximum demand of 2018 of 16 MW and the assumed annual demand growth rate up to 2030 of 2% in the Honiara grid, the system capacity, equal to demand, in 2030 was calculated to be 20.3 MW. Based on the system capacity, the allowable adjustment and demand fluctuation described below were calculated.

(1) LFC reserve capacity

LFC reserve capacity is generally determined by the operation method and specifications of the generator. The diesel generator currently operating on the Honiara grid is not controlled by SCADA (EMS), and there is no power supply command from a central control center to the power plant. In this study, the reserve capacity by BESS was considered as LFC reserve capacity, and the required reserve capacity for the PV introduction amount was calculated.

(2) Allowable adjustment residual

The adjustment residual is a difference from the prediction error that cannot be completely absorbed by reserve capacity. The allowable adjustment residual, which is allowable value of the adjustment residual, has the same meaning as that shown by each electric power company in the form of frequency control value (e.g. 50 Hz ± 0.1 Hz).

In this study, it is considered that the allowable range for frequency fluctuations is given as a statistical value. The constant frequency fluctuation range in SI is 50 Hz ± 2% (± 1 Hz), so it is assumed that the 3σ (99.7%) value of frequency fluctuation is 1 Hz. To convert the frequency fluctuation range (Hz) and adjustment residual (MW), the system constant 10.0% MW/Hz is applied for calculation. As a result, the adjustment residual also has the statistical value 3σ. Assuming the σ value of the adjustment residual is the allowable adjustment residual, the allowable adjustment residual in the demand in 2030 is calculated as follows.

Allowable adjustment residual σ_Q (MW)
= System capacity (MW) × System constant (% MW/Hz) × Allowable frequency fluctuation range (Hz) ÷ 3
= 20.3 (MW) × 10 (%MW/Hz) / 100 × 1 (Hz) ÷ 3 ≈ 0.68

Similarly, the allowable adjustment residual for demand in 2022 is calculated as 0.58.

(3) Demand fluctuation prediction error

The forecast error of the demand fluctuation was calculated by the following formula based on a report by the Central Research Institute of Electric Power Industry (CRIEPI) in Japan.

Demand fluctuation prediction error σ_{PD} (MW)

$$= 0.5 \times \sqrt{\text{System capacity (MW)}} = 0.5 \times \sqrt{20.3} \approx 2.25$$

Similarly, the demand fluctuation prediction error for 2022 is calculated as 2.08 MW.
At present, in the generator operation by SP, the daily economic operation scheduler has not been prepared, which means there is no demand prediction. Therefore, since it is impossible to grasp the demand prediction error from the forecast, the prediction error of the demand fluctuation was estimated by the method used in Japan.

(4) PV prediction error

Since no PV output fluctuation data in the unit of 1 to 10 seconds has been available, the PV prediction error is estimated by the algebraic method.

In this study with the algebraic method, short-period fluctuations within 20 minutes are examined. According to the report of CRIEPI, the smoothing effect by the $\sqrt{N}$ rule is applied to the calculation

for the PV fluctuation up to 20 minutes. The same method is also applied here.

The $\sqrt{N}$ rule is that when there are independent fluctuations whose numbers are N, the combined value is not N times of each fluctuation value but $\sqrt{N}$ times. Therefore, the number N must be determined to apply the $\sqrt{N}$ rule.

To determine the N, the Honiara grid of approximately 120 km^2 is divided into 2 km square meshes by squares. Accordingly, the number of meshes are treated as 30, which means N is equal to 30. Therefore, the leveling effect gain by the $\sqrt{N}$ rule is: $\sqrt{30} \div 30 \approx 0.183$. Smoothing effect within each mesh is not considered since weather change within a mesh is assumed small and does not impact on the PV generation due to a relatively small mesh range of 2 km. Comparing the actual PV generation record with the name plate value in SI, the PV fluctuation ratio is regarded as 0.85.

When this is multiplied by the PV introduction amount of 16.27 MW in 2022, the PV prediction error (output fluctuation) is calculated as 16.27 MW × $\sqrt{30}$ ÷ 30 × 0.85 ≈ 2.53 MW.

This is synonymous with thinking as follows. There is a PV with a rated 542 kW (= 16.27 MW / 30) per mesh, whose actual output power is 542 kW × 0.85 = 461 kW. This 461 kW is assumed to be the maximum fluctuation per mesh in a short cycle (within 20 minutes). Assuming that the variation of each mesh is independent (there is no correlation), apply the $\sqrt{N}$ rule and multiply the variation per mesh by $\sqrt{30}$.

Similar to the above, considering the case that PV capacity reaches 21.27 MW based on the current SP's plan, the PV prediction error (output fluctuation) is calculated as 3.309 MW.

(5) Required capacity of BESS for short cycle

From (1) to (5) above, the required output of the short-period BESS to provide spinning reserve can be obtained as shown in Table 4-8.

Table 4-8 Values of Each Vector with PV Introduction Amount in Algebraic Methods

Item	Value of each vector (MW)			
	@PV16.27MW	@ PV21.27MW	@PV25.27MW	@PV45.27MW
Demand fluctuation σ_{PD}	2.080	2.252	2.252	2.252
PV output prediction error σ_{PV}	2.525	3.301	3.922	7.025
Apparent demand fluctuation σ_P	3.271	3.996	4.523	7.377
Allowable adjustment residual σ_R	0.58	0.68	0.68	0.68
Required reserve capacity σ_G (Required output capacity for short-period BESS)	3.219	3.938	4.472	7.346

Source: JICA Project Team

From the results of calculations using algebraic methods, the required capacity of BESS as spinning reserve provision was calculated as 3.3 MW for the current plan of PV 16 MW in 2022, and 4 MW for PV 21 MW in 2030. It is recommended that the unit size of BESS should be 1 MW or 2 MW, which is used as a standard, considering N-1 criteria, and that a total of 4 MW will be introduced in 2022. As for battery storage capacity, it is necessary to measure and analyze fluctuations of PV and demand for about 1-15 seconds, but no data is currently available. For this reason, the required storage capacity was set to 0.5 hours with reference to the experiences in other island countries.

Therefore, this study finds the required capacity of the BESS is 4 MW / 2 MWh for spinning reserve in 2022.

4-5-2 O&M Cost of Generator Equipment

The O&M cost of each facility was set as shown in Table 4-9. When using a lithium-ion battery, BESS O&M costs correspond to cooling costs during charging and discharging, which are deducted as losses from the 85% total charging and discharging efficiency of BESS. In general, lithium-ion batteries are maintenance-free. Regarding the EMS, it is necessary to change the system in accordance with a change such as system reinforcement, but system expansion cost usually includes this.

Table 4-9 O&M Cost for Power Source Facility

Power Source	O&M (Cost USD/kW-year)	Remarks
PV	6	Interview with SP
Hydro	122	1% of Construction cost
Diesel	7.23	Marsden Jacob[12]

Source: JICA Project Team based on SP information

4-5-3 Discount Rate for Annual Expense Calculation

The discount rate used to calculate each equipment fixed cost was set as 10% according to SP.

4-6 Setting of RE Development Scenario

From the previous studies, it was found that BESS plus EMS is required in 2022 in the base-case scenario based on the current plan of SP. The required amount of BESS as spinning reserve was set to 4 MW / 2 MWh by the result of algebraic method, assumed to be introduced in 2022. For the BESS capacity as peak shift, the supply and demand balance at the off-peak time is analyzed and examined by the supply and demand simulation. On the other hand, the effect of PV output reduction due to unseasonable weather in the dry season is not evaluated because there is no PV output data per hour throughout a year at this time.

It was also found that the current plan alone would not result in RE 100% supply. Regarding the RE development scenario formulation aiming for RE 100% supply, there are possibilities for PV, hydropower, wood biomass and palm shell power generation among the Res resources that can be additionally developed in the Honiara grid. However, feasibility studies have not been conducted for hydropower, wood biomass, and palm shell power generation, or because of the oldness, scenarios based on realistic economics by 2030 cannot be drawn. Therefore, although there are currently land acquisition issues to develop large-scale PV, we will examine a RE 100% supply scenario with PV incorporating BESS. It can be realistically examined leveraging known data such as the basic specifications of power generation and the capacity factor.

A scenario including SP's current plan plus introducing EMS, BESS 4 MW / 2 MWh with base demand growth will be used as the base scenario, and PV plus BESS for peak shift will be added to examine the RE 100% supply scenario.

The scenarios examined by the supply and demand simulation are as follows.

1. Base scenario: SP's current plan + EMS + BESS 4 MW / 2 MWh + Base demand growth scenario
2. RE100% supply scenario: Base scenario + PV + BESS

[12] Least Cost Modeling of Future Generation Expansion Options for the Honiara Electricity System, Marsden Jacob Associates

4-7 Conditions for Power System Analysis

(1) Software for Analysis

Regarding power system analysis, the Project Team planned to check the results of power system analysis conducted by SP using the software of PowerFactory. The Project Team used the software of PSS/E manufactured by Siemens, which is broadly used for power system analysis across the world, in order to check the result.

(2) Study Items

The study items were determined as below in the discussion with SP during the first work.

- Power Flow
- Voltage Analysis

(3) Target Years in Study

The target years on the analysis are 2020, 2025 and 2030 which were determined in the discussion with SP during the first Work.

(4) Time Zones

Taking into consideration of solar power generation, time zones were determined as below in the discussion with SP during the first Work.

- Daytime Peak
- Nighttime Peak

Chapter 5 Examination of Scenarios

5-1 Study of Feasible Renewable Energy 100% Supply Scenario in Honiara Grid

The Solomon Islands Government (SIG) has set a goal to achieve a 50% share of RE in the power sector by 2035 and 100% by 2050.[13] For this reason, aggressive introduction of PV into the Honiara system and introduction of centralized BESS as a policy are being promoted for system stabilization. However, currently available measures only are not enough to achieve the target. Therefore, RE introduction scenarios to achieve the policy objectives will be examined based on supply/demand balancing simulations, and necessary measures will be clarified.

From the supply and demand operation aspect, all the power generation units are operated by the most economical load dispatch to minimize the fuel cost. The generators which are incorporated in the supply and demand balancing simulation are assumed to be in a state of being already commissioned and operable. PDPAT-II, which is used for supply and demand balancing simulation, simulates the most economical operation of a power plant, taking into account the number of power generation units and the profile of load demand. This tool has been used by TEPCO for more than 40 years.

In this study, supply and demand balancing simulation is performed in daily load dispatching basis. For this reason, it is possible to simulate charging with inexpensive power during off-peak periods of BESS, and to calculate economic daily operation. As a result of the supply and demand balancing simulation, the supply power of each power generation unit at hourly basis, the generated power amount, the fuel consumption amount, the annual capacity rate, and as a result, the annual expenses are calculated.

Based on the study in Chapter 4, along with the present plan formulated by the SP, a RE 100% supply scenario is examined, which is feasible and has the lowest cost, using technologies that can be implemented by 2030.

5-1-1 Present Plan

In considering the RE 100% supply scenario with the least cost, first of all we prepared a power plant development pattern according to the SP's present plan, taking into account the specific conditions for the generator unit and the interconnected power grid. Next, a supply/demand balancing simulation was conducted based on the prepared power plant development pattern.

In Chapter 4, the demand and supply balancing simulation based on the current plan has revealed the followings. In 2022, EMS and BESS should be introduced as spinning reserve and system stabilization measures because the totaled PV output is expected to exceed off-peak demand during daytime. The BESS capacity for the necessary spinning reserve is determined using the algebraic method (see 4-5-1 for the detailed examination results). Based on this study, 3.9 MW as the primary BESS capacity is required for the present SP's plan to introduce PVs of 21.27 MW. In practice, a standard unit size (such as 2MW x 2) will be adopted in consideration of costs reduction.
On the other hand, it is expected that RE 100% supply will be available during the off-peak of rainy season in 2030. However, RE's supply capacity is insufficient, especially at nighttime peaks during the dry season. Therefore, in order to achieve RE 100% supply, it is necessary to develop RE to supply power even at night in the dry season in addition to the present plan.

As aforementioned, the only REs that can be developed in SI are currently PV and hydropower. Regarding biomass, there is no data available that could be considered as an RERM scenario because biomass potential studies in SI have not been conducted yet. For hydropower, the development of a new hydropower plant after Tina Hydro scheduled to commission in 2024 is not expected to be in time by 2030 based on the development results of Tina Hydro. Therefore, the peak shift with PV + BESS was examined. Since as of April 2021, the SP's power supply facility development are not going smoothly as planned, SP has expressed that achieving RE100% by 2030 may be difficult and the realistic RE development scenario should be selected.

[13] Presentation on the Consultative Workshop, MMERE , 2019.8.28

5-2 Selection of RE Development Scenarios up to 2030

Based on the renewable energy development pre-feasibility study results in the previous section, the following RE development scenarios based on hydropower and PV + BESS will be examined.

First, look for the RE share in 2030 in the base scenario. Create a RE 100% scenario by adding PV to the base scenario. The impact on the power generation cost will be analyzed based on the feasibility assessment in terms of securing the required PV capacity as a land acquisition aspect and saving as half of the current average electricity rate of USc 65/kWh, which is the policy of the SI's government.

As a result of these studies, the following RE development scenarios for 2030 and issues for RE 100% supply will be organized and recommended scenarios will be proposed.

(i) Scenario 1: Base scenario:
2%/year growth of demand, Present Plan (PP) + BESS (4MW/2MWh)
(j) Scenario 2: RE100% (PV+BESS) scenario:
2%/year growth of demand, to RE100% with PP+PV+BESS in 2030
(k) Scenario 3: RE100% in Rainy season scenario (Recommended scenario):
2%/year growth of demand with PP+PV+BESS in a generation cost USc 32/kWh or less
(l) Scenario 4: RE100% (PV+BESS) in 2040 scenario:
2%/year growth of demand, to RE100% with PP+PV+BESS in 2040

In addition, the following is analyzed as a sensitivity analysis for the recommended scenario 3.
(m) Scenario 5: Demand high case:
4%/year growth of demand, RE80%, PP+PV+BESS
(n) Scenario 6: PV+BESS construction cost status quo case:
2%/year growth of demand, RE88%, PP+PV+BESS, No construction cast reduction in PV+BESS
(o) Scenario 7: New HPP (base case):
2%/year growth of demand for the recommended scenarios with a new hydropower plant
(p) Scenario 8: New HPP (high case):
4%/year growth of demand for the recommended scenarios with a new hydropower plant

5-3 Study on the RE Development Scenario by 2030

The base scenario selected in the previous section base scenario and the scenario of RE 100% supply by PV + BESS will be examined based on the supply/demand balancing simulation.

5-3-1 Scenario 1: Base Scenario: 2%/year growth with PP+BESS for spinning reserve

The settings for the base scenario are as follows.

- Growth rate of power demand: 2%/year (base case)
- Annual electric power sales in 2030: 113.2 GWh/year, Peak demand: 20.3 MW
- Load factor: 60.7% (actual record in 2018)
- Power development plan is based on the SP's present plan. PV 21.27 MW, DG 13.8 MW at 2030
- BESS is only spinning reserve calculated by the algebraic method: 4 MW / 2 MWh

The results of supply/demand balancing simulation are followings.

- Generation cost: USc 30.4/kWh
- Annual power generation: 127.4 GWh/year
- Annual RE supply share: 88%
- Annual Diesel generation: 15.7 GWh/year
- Annual Over flow: 3.9 GWh/year

- In the base scenario, RE 100% supply will be achieved during the rainy season except for peak demand periods in 2030.
- Diesel supply is required during peak and dry season.

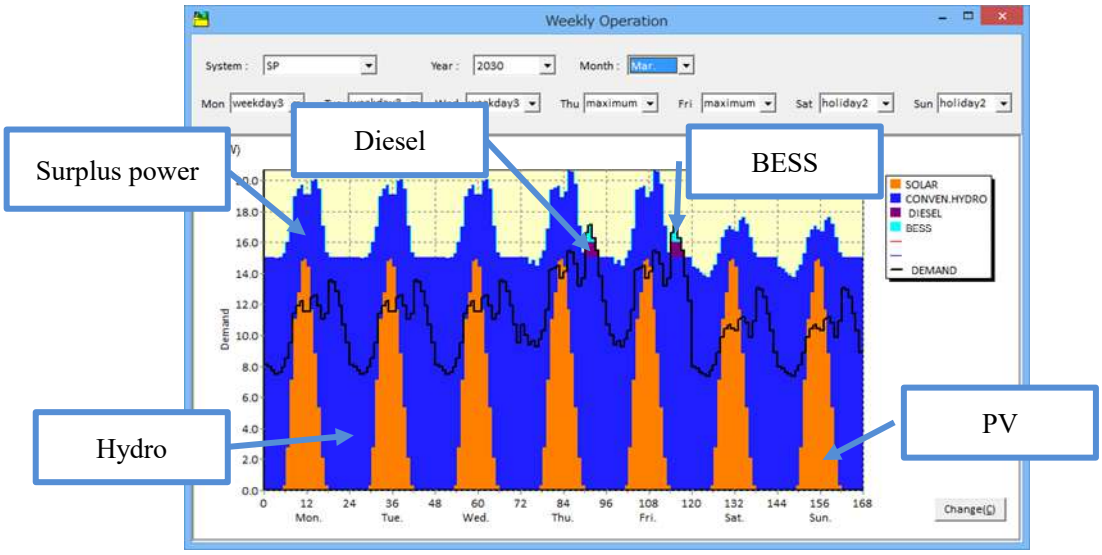

Source: JICA Project Team

Figure 5-1 Supply and Demand Situation in Rainy Season of 2030 (Base Scenario Mar. 2030)

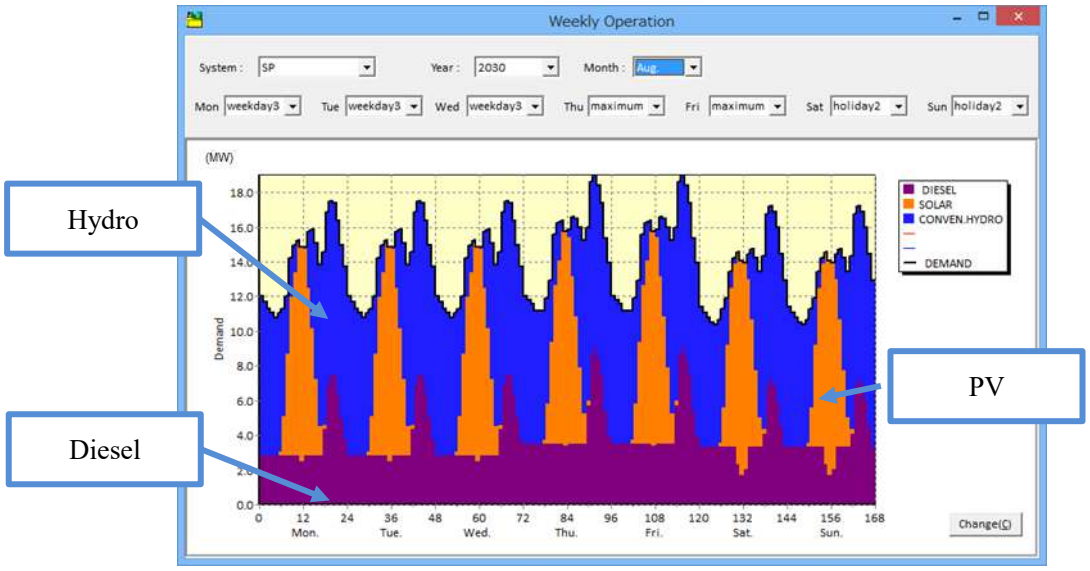

Source: JICA Project Team

Figure 5-2 Supply and Demand Situation in Dry Season of 2030 (Base Scenario Aug. 2030)

5-3-2 Scenario 2: RE 100% Supply Scenario with 2%/year growth, Additional PV+BESS from Base Scenario

The PV and BESS facilities required to achieve RE 100% supply throughout the year are as follows:

- PV 45.27 MW (+24 MW),
- BESS (8 MW + 4 MWh, 15 MW + 90 MWh)

An additional 24 MW of PV, which requires an additional land space of approximate 24 ha, is needed from the base scenario to reach 45.27 MW in total. SP mentions the required PV land under the current plan had not been acquired as of February 2020, and that there is no prospect of securing the additional 24 ha land by 2030.

The currently operating DGs will substitute with Tina Hydropower, which indicates the synchronous generator in the Honiara grid is only Tina Hydropower. Thus, the BESS needs to operate autonomously in the event of a transmission line accident connected to the hydro power plant. This means the BESS requires a self-excited PCS that enables autonomous operation without conventional synchronous generator. In addition, when the PV output records are accumulated over several years, and the weather is inclement during the dry season over several days and the PV output decreases, the BESS needs more capacity for weekly operation. At present, only one year's worth of data cannot be evaluated of inclemency.

- Annual power generation is 158.1 GWh/year
- Annual over flow is 34.3 GWh/year
- Generation cost is USc 35.0/kWh > USc 32/kWh. The generation cost is more than half of the current electricity rate

If peak shift PV is installed, surplus PV outputs will occur during the rainy season. Surplus power from RE generation in the rainy season is close to one-fourth of the annual power generation. As a result, the investment efficiency of PV decreases. When implementing peak shift PV by IPP, it is necessary to devise measures for tariff such as two charges of Capacity Charge and Energy Charge.

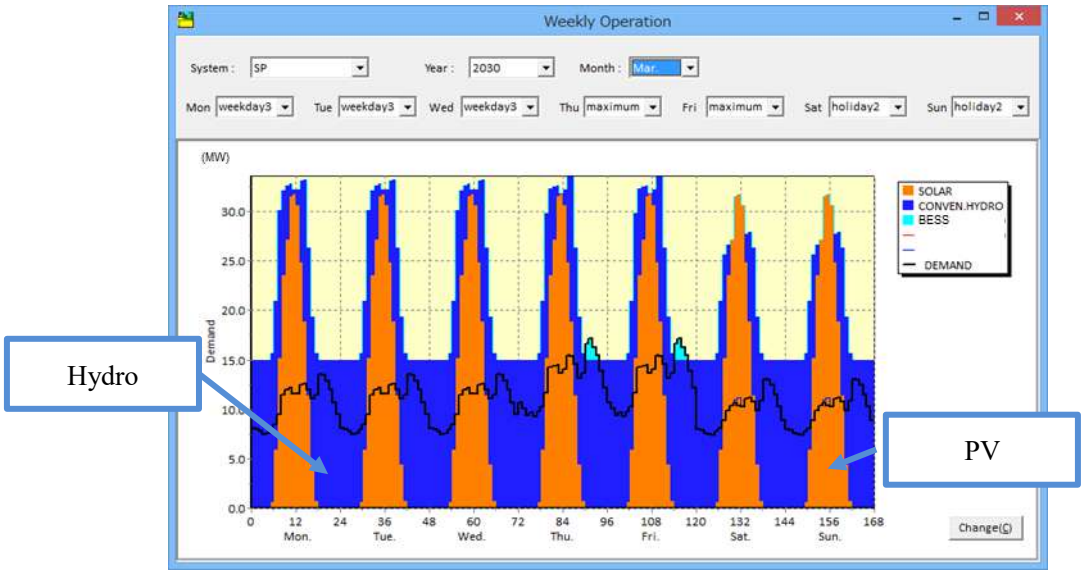

Source: JICA Project Team

Figure 5-3 Supply and Demand Situation in Rainy Season of 2030 (RE 100% Mar. 2030)

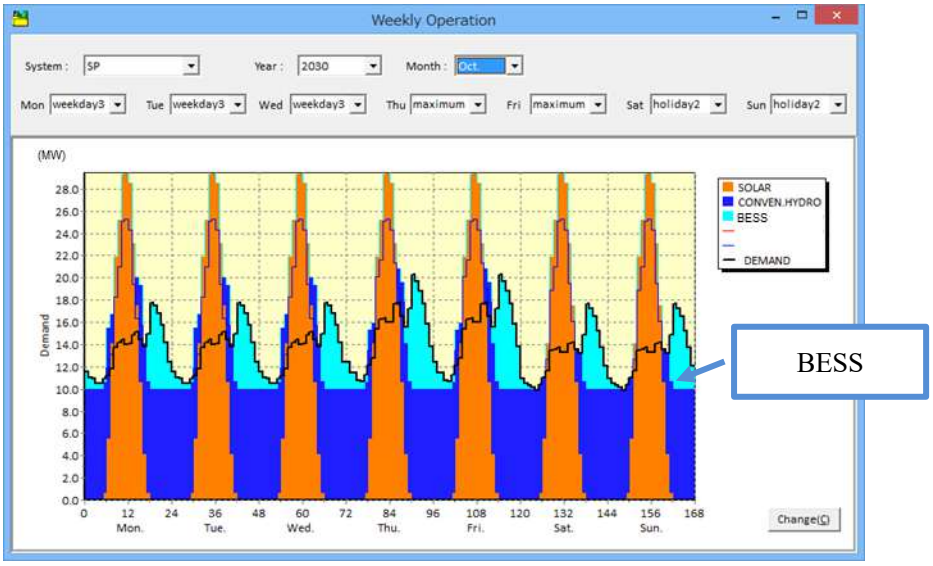

Source: JICA Project Team

Figure 5-4 Supply and Demand Situation in Dry Season of 2030 (RE 100% Aug. 2030)

5-4 RE Development Scenario to be Recommended by 2030

According to results of the supply/demand balancing simulation, the present plan of SP will achieve RE 100% supply in the Honiara system during the rainy season by 2030 except during the maximum power demand period. Furthermore, RE 100% supply is feasible with the additional development of PV + BESS technically. However, 100% supply of RE through the additional development of PV + BESS has some risks such as a secure additional PV land, in addition, the cost of power generation may increase due to the increase in required BESS capacity due to the PV output reduction in inclemency during the dry season.

In Chapter 4, the possibility of further RE development has been examined based on available information and documents. There are potential for, in addition to PV, hydropower and biomass (wood, palm shell), but due to lack of information, there are evaluated as difficult to include in the roadmap.

Therefore, it was considered to supply 100% RE by PV + BESS. In order to supply 100% RE by PV + BESS, it is necessary to develop 45 MW of PV by 2030. However, the SP side pointed out that it would be difficult to develop 45 MW by 2030.

From this fact, by 2030, RE 100% supply will be achieved in the rainy season by PV + BESS, and feasibility studies on possible RE will be implemented for nighttime supply in the dry season, so that RE 100% supply will be fully achieved early after 2030. The implementation of FS on available RE will be recommended.

Therefore, a scenario for realizing RE 100% supply during the rainy season by developing additional PV + BESS is examined.

5-4-1 Scenario 3: RE 100% Supply in Rainy Season: 2%/year growth, Base Scenario Additional PV+BESS

In the scenario of Tina Hydropower, additional PV and BESS development in the RE annual 100% supply scenario mentioned above, the generation cost is USc 35/kWh, and it is difficult to contribute the Solomon government's goal of halving the electricity tariff. In the 2030, a scenario is examined in

which PV + BESS is additionally developed with the aim of RE 100% supply during the rainy season, and the generation cost decreases in half of current tariff, which can be evaluated to be feasible at this moment.

If 4 MW PV and BESS for peak shift as 4 MW / 24 MWh are added to the base scenario, the generation cost will be decreased in USc 31/kWh. In this case, the RE supply share in the annual generation is estimated to be 90.9%. In the rainy season (January-March, December), 100% supply of RE will be achieved. Some diesel supply is required only during the dry season nights.

The required spinning reserve for PV 25.27 MW is 4.5 MW by algebraic methods. In the base scenario, 4 MW-2 MWh BESS is installed, so the remaining 0.5 MW was 1/50 of the 4 MW / 24 MWh peak shift BESS, so even capacity batteries that have a moderate charge/discharge ability could be substituted.

- Annual generation is 131.2 GWh/year
- 10 MW of diesel generation units remain. Annual generation is 11.9 GWh/year.
- Overflow is 16.2 GWh/year
- Generation cost is USc 31/kWh ＜ USc 32/kWh
- Overflow from RE in rainy season reduced less than half of base scenario.

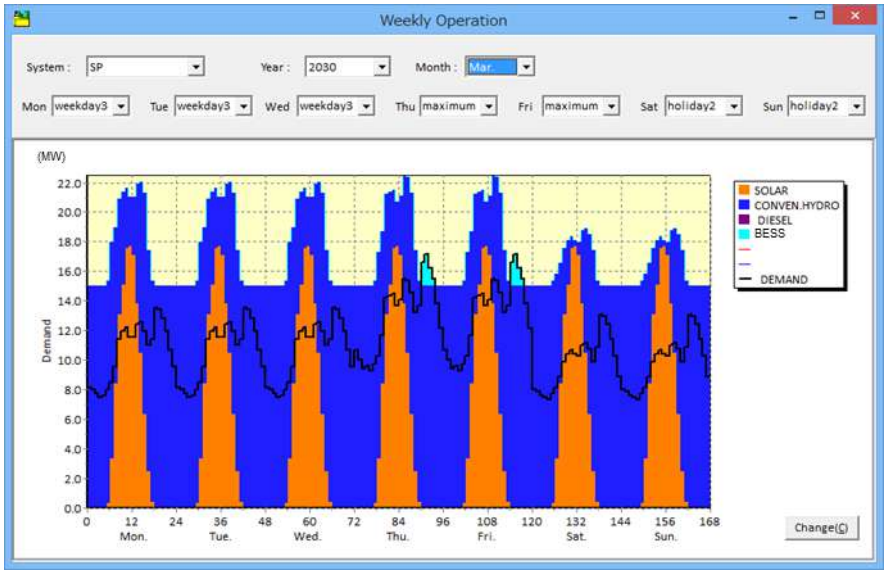

Source: JICA Project Team

Figure 5-5 Supply and Demand Situation in Rainy Season of 2030

(RE 90% PV+BESS Mar. 2030)

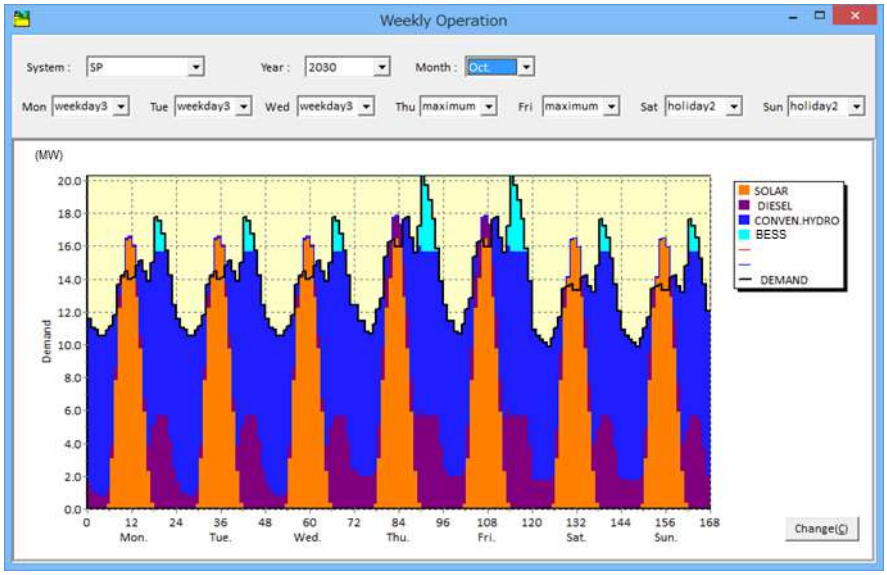

Source: JICA Project Team

Figure 5-6 Supply and Demand Situation in Dry Season of 2030

(RE 90% PV+BESS Aug. 2030)

5-4-2 Selection of Recommended Scenario in 2030

According to the previous studies, the impact on the power generation cost policy will be minimized and the Honiara system will achieve RE 100% supply in the rainy season in 2030. Therefore, in 2030, RE 100% supply from PV and BESS will be achieved in the rainy season. Scenario 3 as the "RE 100% supply in rainy season" is the recommended scenario.

On the other hand, in particular, during the nighttime peak in the dry season of 2030, the supply capacity of RE will be short by about 12 GWh/year in the RE 100% supply in rainy season scenario. For this reason, in order to achieve RE 100% supply, it is necessary to develop RE night supply during the dry season in addition to the RE 100% supply in season scenario.

As aforementioned, regarding biomass, wood biomass and palm shell are expected to be promising, but there is no data that can be considered as a road map scenario because the potential survey of biomass power generation in Solomon has not been conducted. As for hydropower, the new hydropower plant to be developed next to Tina Hydro that is scheduled to commission in 2024 is expected not to be in time by 2030 based on the development results of Tina Hydro.

It is recommended to conduct a biomass and hydropower potential study and a feasibility study of a promising project to evaluate the feasibility of adopting it on a roadmap as an alternative to diesel power generation.

5-4-3 Scenario 4: RE 100% with PV+BESS in 2040

At present, it will be difficult to secure by 2030 the necessary large-scale PV site space for 100% renewable supply with PV+BESS, which is a technology applicable to the Honiara system. A case was considered where large-scale PV introduction could be possible by 2040.

The following assumptions have been made regarding the demand situation after 2030 and the introduction of small and medium-scale PV.

It is assumed that the demand for water supply pumps (contract electric power of about 200 kW, 20 locations) of Solomon Water, a water supply corporation, can be DR contracted by taking them into a

micro grid and operating them by EMS. It was assumed that about 1/3 of the pump capacity, 0.7 MW, would be reduced to 4 hours during peak night hours and transferred to daytime loads (green part shown as “OTHERS” in Figure 5-7).

As a small and medium-sized PV, it is assumed that the rooftop solar can be installed in a building (about 3,500 buildings) newly planned for sale by Solomon Housing, a Soviet house maker. It is assumed that one-third of the total number of buildings can be equipped with PV panels of 4 kW each, and that a total of 5 MW of small and medium-sized PV can be installed.

With the demand growth of 2%/year, the maximum demand in 2040 will be 24.7 MW and the electric power demand will be 138 GWh/year. The renewable energy facilities are required as PV 64.97 MW and BESS (8 MW / 4 MWh for spinning reserve, 16 MW / 96 MWh for peak shift). In this case, the annual overflow of electricity that is not supplied to the demand from renewable energy is 40.6 GWh/year. Annual HPP and PV power generation capacity is 180 GWh/year, and overflow is equivalent to 22.5%. This overflow mainly occurs during the rainy day.

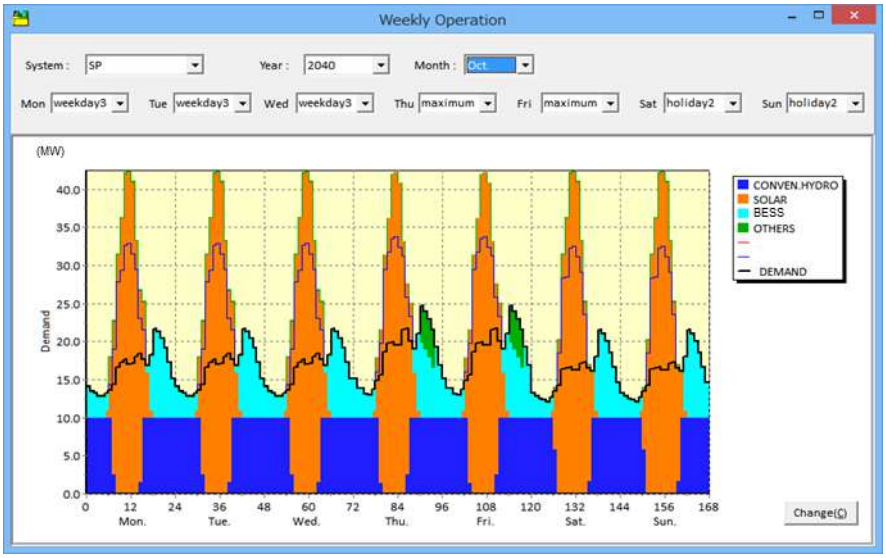

Source: JICA project team

Figure 5-7 Supply and Demand Situation in Dry Season of 2040

(RE 100% PV+BESS Oct. 2040)

<u>Impact of introducing small and medium-sized PV by 2030</u>

In this section, the impact of introducing small and medium-sized PV by 2030 has been examined on the cost of power generation and the supply rate of renewable energy. In the section above, it is considered that 5 MW of small and medium-sized PV will be introduced by 2040.

If the obstacles to the introduction of small and medium-sized PV by the third-party ownership (TPO) model described in Chapter 7 are successfully cleared and various conditions are met, the shortest possible introduction of small and medium-sized PV is in 2022 or 2023. The scale of introduction is expected to be 5 MW.

According to SP's latest plan, 12 MW of PV will be put into operation in 2022, bringing the total PV output capacity in the Honiara system to 16 MW in the same year. Since the maximum power demand in 2022 is estimated to be 17 MW, it is expected that the PV output may exceed the demand during the daytime PV maximum output.

Therefore, in order to realize 100% RE supply, it will be necessary to operate the system using only PV, especially in the dry season. It is considered that it will take time to prepare the equipment for system operation using only the PVs, to improve the system of operation and maintenance personnel, and to

master the work. Due to the need for preparation, it is desirable to introduce a further 5 MW PV after 2023 the following year.

The impact of introducing 5 MW of small and medium-sized PV in 2023 has been examined in terms of supply and demand balance and power generation costs.

(1) Impact on supply and demand balance

Looking at the balance of supply and demand in 2023, in March, when PV output is maximum, PV output would exceed daytime demand, resulting in surplus output from PV. （Figure 5-8）
If EMS + BESS is introduced as a measure against surplus PV output by 2022, there will be no problem. BESS can absorb the surplus outputs to stabilize the system.

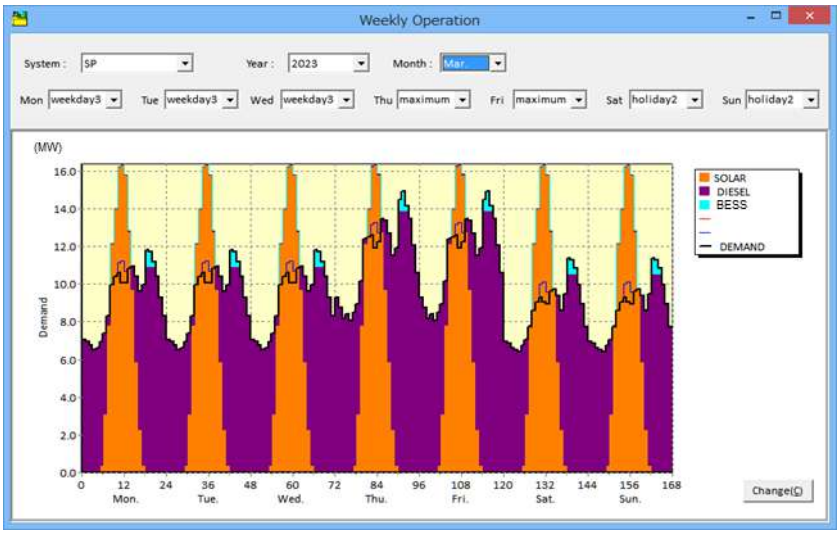

Source: JICA project team

Figure 5-8 Small and medium PV introduction case (March, 2023)

Even in October, when demand is at its annual peak, there will be surplus PV output during the day. （Figure 5-9）
On the other hand, due to the increase in PV output, the diesel generation has decreased, and the RE supply rate has increased from 29% to 37%. Generation costs will be slightly reduced from 30 USc / kWh to 29.9 USc / kWh.

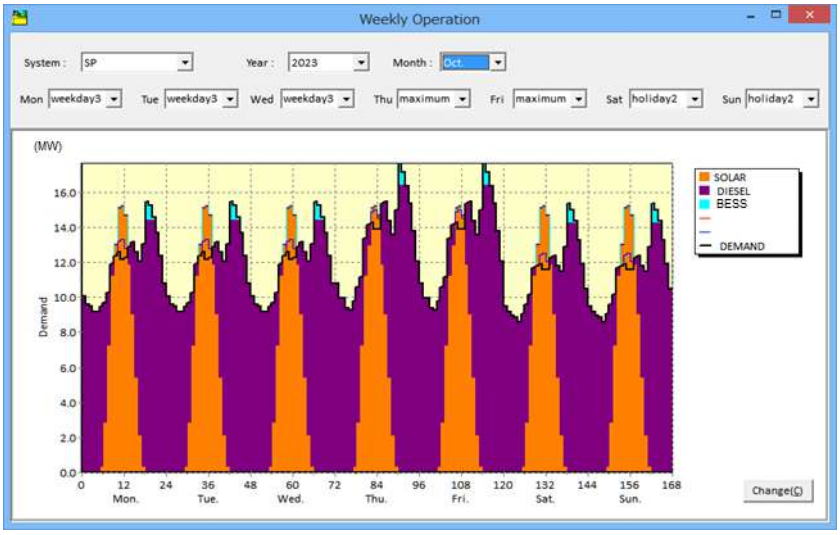

Source: JICA project team

Figure 5-9 Small and medium PV introduction case (October, 2023)

(2) Status of surplus output

After 2023, the surplus output of is large in the cases of small and medium-sized PV introduced. On the other hand, the reduction of diesel fuel consumption would also increase, so the renewable energy supply rate increases.

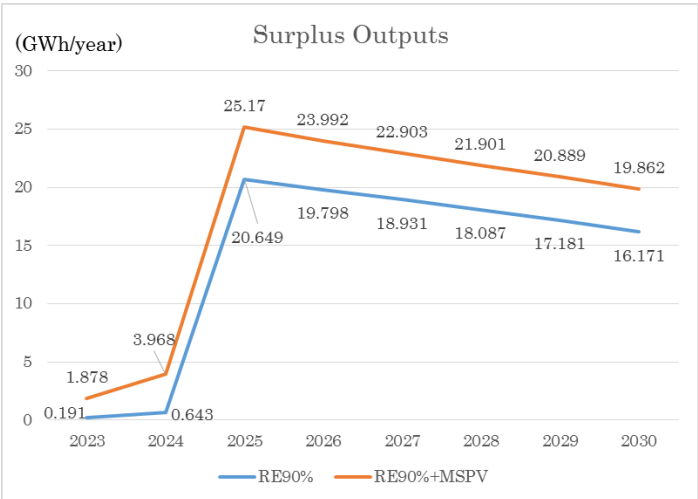

Source: JICA Project Team

Figure 5-10 Comparison of surplus output in the case of introducing small and medium-sized PV

(3) Impact on generation cost and RE supply rate

When introducing small and medium-sized PV, the introduction by TPO has been considered. As an incentive on the TPO side, we assumed that a profit of about the weighted average cost of capital (WACC) would be added to the selling price, examined the supply-demand balance, and calculated the power generation cost.

WACC is assumed to be 7.3% as shown in the table below.

Table 5-1 Weighted Average Cost of Capital (WACC)

	Bond	Equity Participation
A Weighting	80%	20%
B Nominal Cost	10.00%	10.00%
C Inflation Rate	2.50%	2.50%
D Real Cost[(1+B)/(1+C)-1]	7.30%	7.30%
E Weighted Cost	5.84%	1.46%
F WACC	7.30%	

Source: JICA Project Team

The power generation cost has been calculated by multiplying this profit by the annual cost of PV and adding it together with the O&M cost.
As a result, the impact on power generation costs is small.
The introduction of a large amount of PV reduces the fuel consumption of diesel generation, but the introduction of Tina hydropower has reduce diesel generation, so the effect of reducing electric power generation costs by introducing small and medium-sized PV is limited.
In addition, since diesel generation after the commissioning of Tina hydropower is responsible for the supply to the peak demand at night in the dry season, the effect of reducing diesel fuel is limited even if only PV is increased.
The RE supply rate rises from 90% to 94% in the 2030.

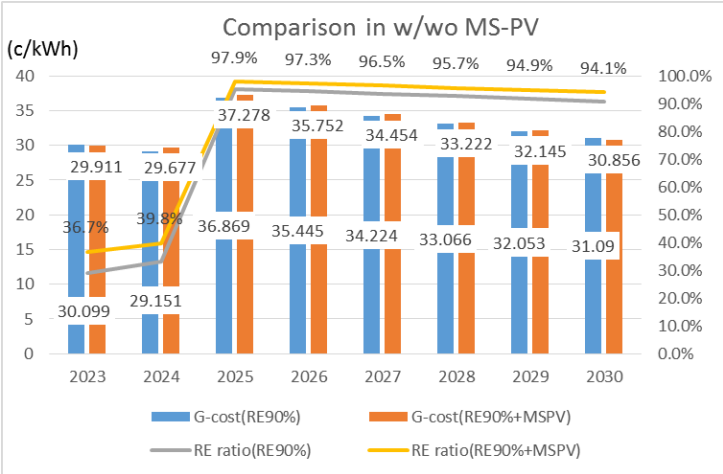

Source: JICA Project Team

Figure 5-11 Impact of small and medium-sized PV on generation costs and renewable energy rates

(4) Impact of Introduction of small and medium-sized PV by 2030
In the above (1) to (3), the impact of introducing small and medium-sized PV has been calculated. From the viewpoint of generation cost, there is no significant difference from scenario 3 (recommended scenario), but in order to proceed with the introduction of small and medium-sized PV, it is necessary to improve the conditions as shown below.

- Elimination of access fee (standby charge) and establishment of power sales system due to law revision
  As mentioned above, standby charge is a major barrier to IPP entry in Solomon Islands, and it is also imposed on small and medium-sized PV developers. Therefore, this elimination will greatly

contribute to promoting the introduction of small and medium-sized PV.

- Establishment of technical requirements for grid connection of distributed generations
  Even when distributed power sources are connected to the grid, they should not adversely affect the supply reliability (power outage, etc.) and power quality (voltage, frequency, power factor, harmonics, etc.) of the distribution system. It is required for the public to ensure the safety of workers and to prevent adverse effects on the maintenance of distribution system supply equipment and other interconnected consumer equipment. In general, PV is connected to the grid via an inverter, so it is necessary to appropriately determine the requirements such as the grid interconnection protection device. Therefore, it is necessary to establish interconnection technical requirements for distributed power sources and create a mechanism to make power generation facility installers comply with these requirements.

- PPA pricing, FIT settings
  According to the results of the supply and demand simulation, the amount of power generated by Tina hydropower is possible be large during the rainy season, and it is likely that it will be difficult for consumers to trade surplus PV power. On the other hand, from the perspective of power generators (PV developers), appropriate pricing and purchase periods will affect future profits, so attractive conditions and motivation are necessary to secure business prospects. Therefore, it is necessary to set power purchase conditions during the rainy season and the FIT method based on them.

- TPO business approval
  The introduction of the TPO model is mentioned as an examination of a new business model in Solomon Islands. The introduction of this TPO model is expected to contribute to the introduction of small and medium-sized PV, but this business form needs to be approved by the Solomon Islands

If measures against surplus PV output by EMS + BESS are realized, there is no technical problem in introducing small and medium-sized PV, and although it is limited, it is thought that it will contribute to improving the renewable energy supply rate and reducing the burning of diesel power generation. However, it is necessary to improve the above conditions for the introduction and promotion of small and medium-sized PV, and since the specific trends of these conditions are unclear at this point. Then, the small and medium-sized PV should not be included in the recommended scenario up to 2030.

5-5 Sensitivity Analysis – Confirmation of Robustness of Recommended Scenario –

The following sensitivity analysis is performed for the recommended scenario of RE 100% supply during the rainy season (base scenario + BESS (4 MW / 24 MWh)).

- Demand high case (4%/year growth of power demand)
- PV+BESS construction costs remaining present level (no reduction) case
- Next hydropower installation case (referred to the Tina construction cast)

5-5-1 Scenario 5: Demand High Case (4%/year growth)

The impact of a 4%/year increase in power demand is assessed on the recommended scenario of RE 100% in the rainy season with PV and BESS in 2030.
The results of the supply and demand balancing simulation when using electricity demand of 4%/year are as follows.

- Annual power demand is 142.8 GWh/year
- Peak demand is 25.6 MW
- Diesel generation units remain at 11.5 MW due to increased demand.
  Annual diesel generation increased to 31.2 GWh/year.

- Annual overflow of RE decreased significantly from 16.2 GWh/year to 5.7 GWh/year due to increased demand especially during the rainy season.
- The generation cost has curtailed to USc 28.3/kWh due to a decrease in overflow.
- Share of RE supply will be 79% of the annual generation.
  Achieved RE 100% supply in March during the rainy season except during the peak three days.

Even if demand increases, it is expected that RE 100% supply would be achieved on weekdays and weekends in March of the rainy season. Share of RE accounts for 79% of annual transmission end demand. The generation cost will decrease to USc 28.3/kWh due to a significant decrease in overflow due to increased demand. Therefore, it can be said that the recommended scenario effectively performs even in the high demand case.

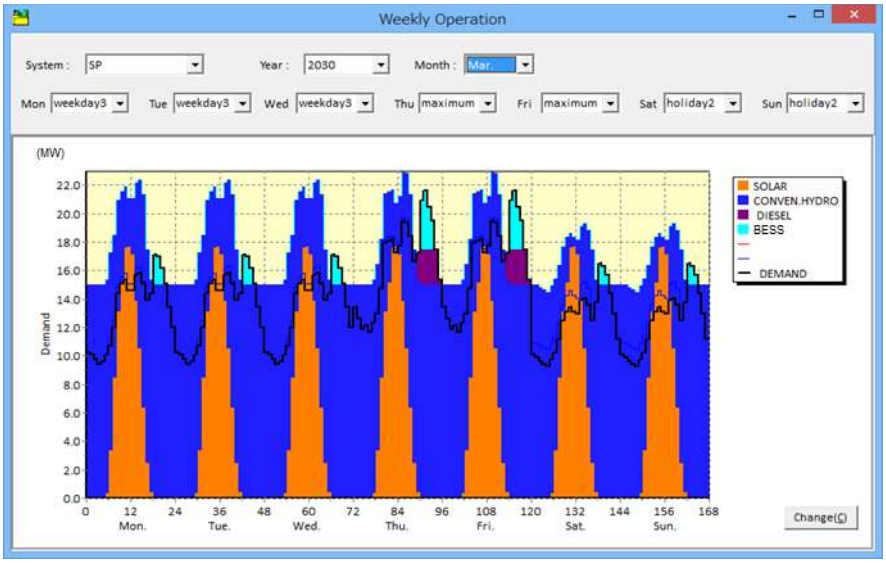

Source: JICA Project Team

Figure 5-12 Supply and Demand Situation in Rainy Season of 2030

(4%/year growth Mar. 2030)

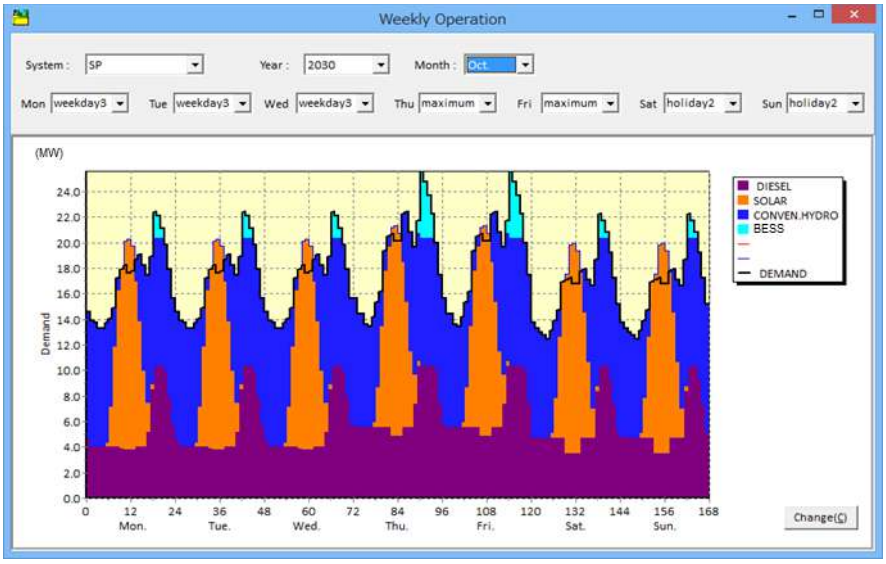

Source: JICA Project Team

Figure 5-13 Supply and Demand Situation in Dry Season of 2030 (4%/year growth Oct. 2030)

5-5-2 Scenario 6: PV+BESS Construction Cost Status Quo Case

In previous studies, construction costs for PV and BESS were reduced based on the IRENA report.[14] On the other hand, it is evaluated that to effect from construction cost of PV and BESS remaining present level.

In previous studies, PV construction costs were reduced from USD 2,600/kW to USD 1,510/kW, BESS construction cost were reduced from USD 4,400/kW to USD 2,000/kW for calculation. The Calculations were performed with these costs maintained as is.

Generation cost calculations have been conducted with these costs maintained on present level. As a result, the generation cost is USc 32.8/kWh, which is almost equal to half the current electricity tariff. Also, even if fixed costs increase, there is no effect on fuel costs, so there is no change in the supply/demand balance. Therefore, the PV and BESS construction cost remaining present level case does not affect the recommended scenario of rainy season RE100% supply.

5-5-3 Next Hydropower Installation Case

This section discusses on the effect of introducing Komarindi Hydropower Plant, which could be one of the candidates for the next hydropower plant in the present development plan and was conducted feasibility study by ADB in the past. The construction unit price for Komarindi Hydro was set at USD 1540/kW, taking into account the small scale and difficult access, referring to the construction unit price for Tina Hydro. According to the feasibility study report implemented by ADB,[15] the installed capacity could be 6.6 MW and the annual generation could be 45.5 GWh/year. Based on the data in the report, rated output operation is assumed to be possible for around six hours a day throughout the year.

Table 5-2 Monthly Outputs of Komarindi Hydropower

	Jan	Feb	Mar	Apr	May	Jun	Jul	Aug	Sep	Oct	Nov	Dec
Output (MW)	6.6	6.6	6.6	6.6	6.6	6.6	6.6	6.6	6.6	6.6	6.6	6.6
Generation (GWh)	4.31	4.2	4.59	4.31	3.96	3.05	3.2	2.81	3.12	3.81	4.02	4.12

Source: JICA Project Team

(1) Scenario 7: Demand Base Case (2%/year) with Komarindi Hydropower

The results of supply/demand balancing simulation are described in followings.

- Full RE 100% supply will be achieved in 2030.
- Annual generation is 163.4 GWh/year.
- Annual overflow is 49.9 GWh/year. Its share of annual generation form RE (PV+HPP) is 30%.
- Generation cast is USc 38.4/kWh.

[14] IRENA Electricity Storage Costs 2017
[15] Komarindi, ADB, 2001

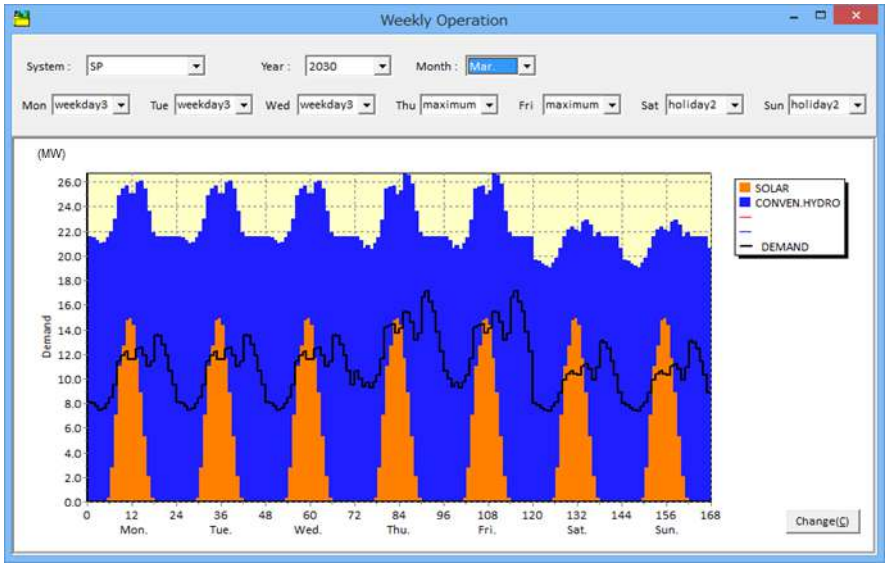

Source: JICA Project Team

Figure 5-14 Supply and Demand Situation in Rainy Season of 2030

(2%/year growth with Komarindi Hydropower Mar. 2030)

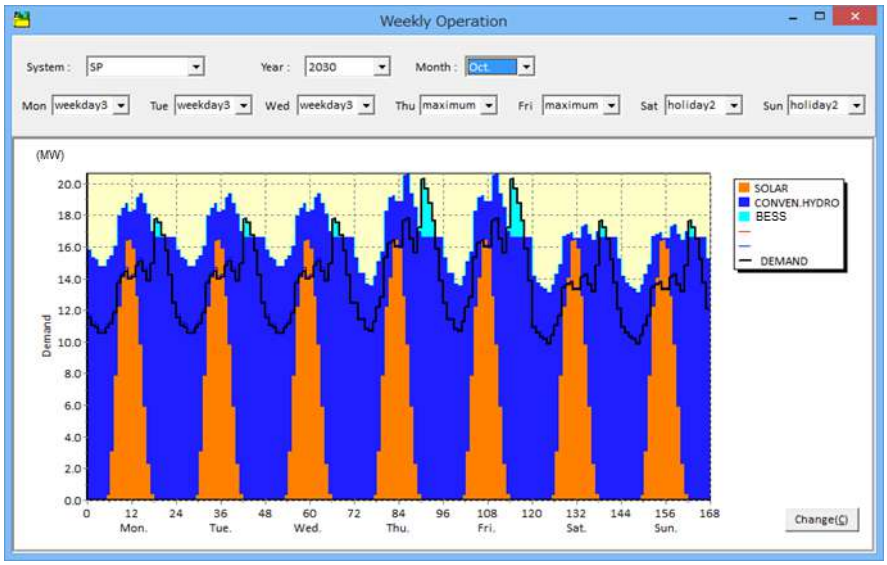

Source: JICA Project Team

Figure 5-15 Supply and Demand Situation in Dry Season of 2030

(2%/year growth with Komarindi Hydropower Oct. 2030)

(2) Scenario 8: Demand High Case (4%/year) with Komarindi Hydropower

The results of supply/demand balancing simulation are described in followings.

- Annual generation is 170.1 GWh/year.
- Annual overflow decreased to 26.7 GWh/year due to increased demand during the rainy season. Its share will be reduced to 16% of annual hydro and PV power generation.
- In the rainy season, 100% supply of RE will be achieved. During the dry season, some diesel power generation is required. The annual RE supply share will be 96.3%.
- Annual diesel generation is 6.3 GWh/year. Diesel generation units are 5.5 MW.

- Generation cast is USc 30.9/kWh.

Thus, based on ADB's FS report, Komarindi Hydropower is shown that even if the construction unit price is higher than Tina Hydropower, it could be a substitute for diesel generation. On the other hand, if demand growth is to be 4%/year, it will be necessary to further development of REs to replace diesel generation.

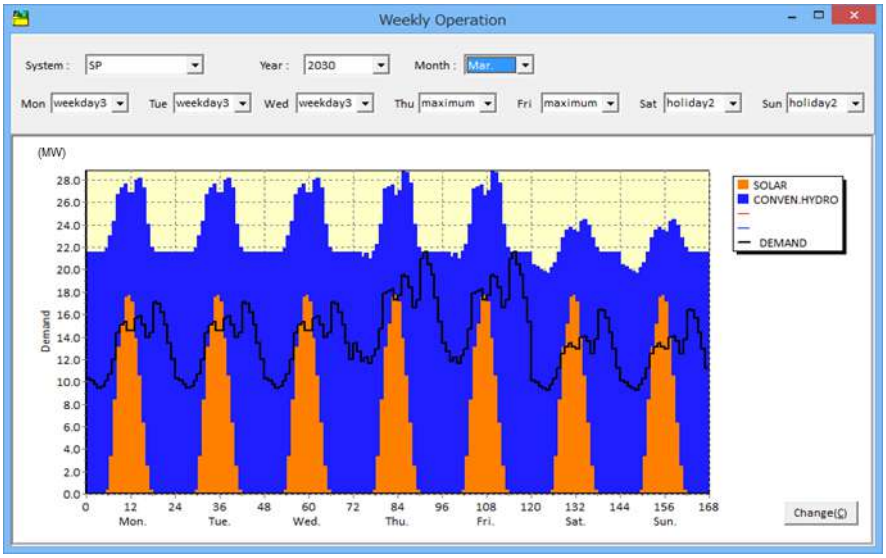

Source: JICA Project Team

Figure 5-16 Supply and Demand Situation in Rainy Season of 2030

(4%/year growth with Komarindi Hydropower Mar. 2030)

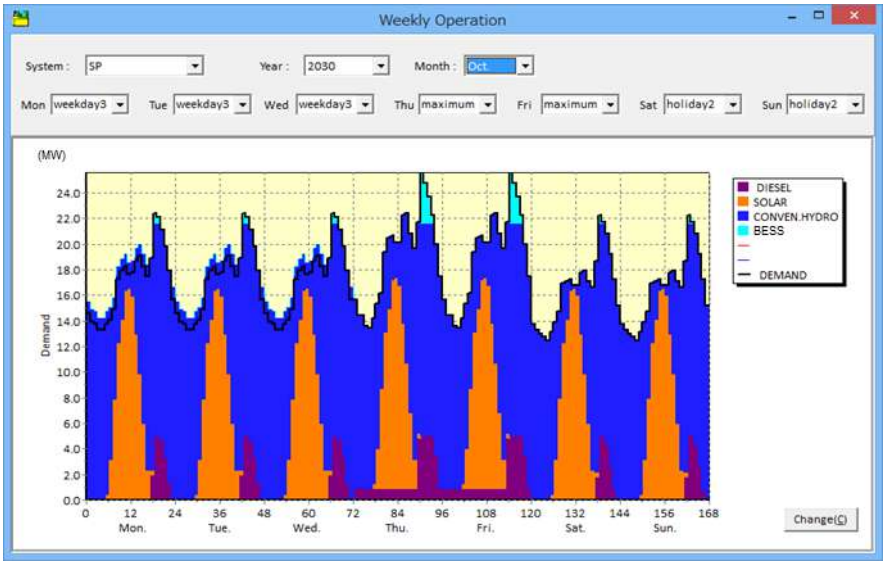

Source: JICA Project Team

Figure 5-17 Supply and Demand Situation in Dry Season of 2030

(4%/year growth with Komarindi Hydropower Oct. 2030)

5-6 Recommended Renewable Energy 100% Scenario

As aforementioned, Scenario 1 to Scenario 8 have been considered. Scenario 1: Base scenario (2% increase in power demand, SP current power development plan plus BESS (4 MW / 2 MWh)) based on the power development plan already formulated by SP. Under the SP's current power development plan, planned as renewable energy supplies are Tina hydro (15 MW) and PV (21.27 MW). In the base case of 2030, renewable energy supply is 88%. The supply capacity of renewable energy is insufficient at nighttime during the dry season and during peak demand during the rainy season, and 15.7 GWh of electricity generated by DG is required. Therefore, scenario 2 (demand increase as 2%/year, PV 45.27 MW (SP current plan + PV 24MW), BESS 8 MW / 4 MWh for spinning reserve and BESS 15 MW / 90 MWh for peak shift) has been considered, which is achieved RE 100% supply by PV + BESS used feasible technology and projects in 2030. In scenario 2, PV 24 MW, BESS (4 MW / 2 MWh) as a spinning reserve and BESS (15 MW / 90 MWh) as a peak shift will be added to the base scenario. With the addition of PV + BESS, 100% renewable energy supply can be achieved. However, as of February 2020, only the amount of 3.27 MW, including existing facilities, of 21.27 MW of PV in the SP current plan is secured their site spaces. The SP side expressed that it would be difficult to secure a land of 24 MW in addition to the planned 18 MW for the next 10 years.

Therefore, in 2030, scenario 3 (demand growth by 2%, in addition to SP current power development plan, BESS (4 MW / 2 MWh for spinning reserve and peak shift 4 MW / 24 MWh)) that can achieve RE 100% supply during the rainy season has been studied, and has been approved by the SP side at the wrap-up meeting for the third mission in February 2020. The recommended scenario for the 2030 section has been agreed to in Scenario 3. However, since the final goal of SP is RE 100% supply, scenario 4 that is used as a scenario to achieve RE 100% supply in 2040 using PV + BESS as a currently applicable technology has been considered. Scenario 4 consists of PV 64.97 MW (SP current plan + 43.7MW) and BESS (8 MW / 4 MWh for spinning reserve and 16 MW / 96 MWh for peak shift) for 24.7 MW of peak demand in 2040 as a 2% growth in demand. Anyway, large-scale PV development is required.

At present, as renewable energy power sources other than PV that can be applied to the Honiara system, F/S at the hydroelectric point has been performed more than 30 years ago, but there is no other information such as biomass. However, as discussed in the previous chapter, because it is considered to have potential for woody biomass generation and shell generation, so it is desirable to investigate whether it can be used as a power source after 2026.

A sensitivity analysis of Scenario 3, which is the recommended scenario, has been examined in Scenario 5 when demand increased at 4%/year and in Scenario 6 when the introduction cost of PV + BESS would not decrease. Although the F/S data is based on the old data, Scenario 7 has been considered as a new hydropower plant introduction scenario based on the F/S data of Komarindi Hydropower, which is the only one study other than Tina Hydropower. Scenario 8 is a similar one with Scenario 7, but its demand growth rate is assumed 4%/year.

Table 5-3 shows a comparison of each scenario considered so far. Generation cost has not been calculated for Scenario 4 assuming 2040. This is because there is currently no information that can be calculated on the same basis as other scenarios. Please refer to the generation cost of Scenario 2, whose generation cost is to achieve RE 100% supply by 2030 with PV + BESS.

Table 5-3 Comparison in Scenarios

Description			Scenario 1 Base Scenario @2% demand growth	Scenario 2 PV + BESS RE100 @2030	Scenario 3 PV 4MW + BESS 4MW - 24 MWh	Scenario 4 PV+BESS RE100 @2040	Scenario 5 4% demand growth rate scenario	Scenario 6 PV+BESS high cost scenario	Scenario 7 Komarindi HP RE100 @2% demand growth	Scenario 8 Komarindi HP RE100 @4% demand growth
Calculation Conditions	Target year		2030	2030	2030	2040	2030	2030	2030	2030
	Annual demand growth rate		2%	2%	2%	2%	4%	2%	2%	4%
	Load factor		60.7%	60.7%	60.7%	60.7%	60.7%	60.7%	60.7%	60.7%
	Solar PV cost	USD/kW	1,510	1,510	1,510	1,510	1,510	2,600	1,510	1,510
	BESS cost	USD/kW	2,000	2,000	2,000	2,000	2,000	4,400	2,000	2,000
Demand	Peak	MW	20.3	20.3	20.3	24.7	25.6	20.3	20.3	25.6
	Energy	GWh	113.2	113.2	113.2	138.0	142.8	113.2	113.2	142.8
Power Source Capacity	Diesel	(MW	13.8	0	13.8	0	11.5	13.8	0	5.5
	Solar PV	MW	21.27	45.27	25.27	64.97	25.27	25.27	25.27	25.27
	Hydro	MW	15	15	15	15	15	15	21.6	21.6
	BESS for primary	MW/MWh	4/2	8/4	4/2	8/4	4/2	4/2	4/2	4/2
	BESS for peak shift	MW/MWh	0	15/90	4/24	16/96	4/24	4/24	4/24	4/24
Annual Supply Energy	Diesel	GWh	15.7	0.0	11.9	0.0	31.2	11.9	0.0	6.32
	Solar PV	GWh	33.4	71.1	39.7	103.8	39.7	39.7	39.7	39.7
	Hydro	GWh	78.0	78.0	78.0	78.0	78.0	78.0	123.5	123.5
	BESS	GWh	0.21	8.98	1.19	18.10	1.19	1.19	0.25	0.60
	Annual Generation	GWh	127.4	158.1	130.8	199.9	150.1	130.8	163.4	170.1
	BESS charging	GWh	-0.25	-10.56	-1.40	-21.30	-1.40	-1.40	-0.30	-0.71
	Surplus Power	GWh	-13.9	-34.3	-16.2	-40.6	-5.70	-16.2	-49.9	-26.7
Result	RE share based on annual generation		88%	100%	90%	100%	79%	90%	100%	96%
	Generation cost	USc/kWh	30.4	35.0	31.1	-	28.3	32.8	38.4	30.9
	Initial cost for PV, BESS, Komarindi	Million USD	43.7	121.6	57.8	153.3	57.8	57.8	159.4	159.4
	T&D upgrade cost	Million USD	4.9	12.1	6.0	15.6	6.0	6.0	19.7	19.7
	Total cost	Million USD	48.6	133.7	63.8	168.9	63.8	63.8	179.1	179.1

Source: JICA Project Team

Only scenario 2 can achieve RE100% by 2030, which is the initial policy goal that was set by SP, however, their renewable energy development plan has been delayed due to various reasons including the COVID-19 pandemic. Given the delays in renewable energy development, SP asked the Project Team to recommend a feasible and realistic alternative scenario. The Project Team, therefore, decided to select a scenario which could realistically be achieved. According to the studies so far, and based on the information obtained at present, it would be technically and economically viable to aim for a scenario of RE 100% supply with PV + BESS (Scenario 3 in Table 5-3). However, securing a PV site space and charging power from the PV imposes a larger load on the grid. In particular, we study the system configuration based on the proper installation positions of PV and BESS for peak shift, and prepare the conditions (prevention of independent operation, autonomous operation, voltage control, VSG, etc.) that must be provided for the grid connection of PV and BESS.

On the other hand, it is considered that alternatives of diesel power generation could be a new site of hydropower or biomass (wood, palm shell). Therefore, after conducting feasibility studies on these, the appropriate scenario of annual RE 100% supply will be determined.

Considering the potential of renewable energy in the Honiara grid, at present, by 2030, the required specifications of PV + BESS and the technical requirements of grid interconnection will be summarized, and the peak shift by PV + BESS will be realized. At the same time, it is appropriate to evaluate the feasibility of hydropower and biomass and gradually achieve the most economical 100% renewable energy scenario.

For this reason, as a scenario for introducing renewable energy by 2030, the scenario of RE 100% supply in the rainy season using PV + BESS is recommended. After 2030, PV+BESS will be developed continuously to achieve 100% RE supply until 2040. Then, the target year of 100% RE supply in the Honiara system could be received by 2040.

In the coming 10 years from 2030 to 2040, when it is possible of following additional development that 40.7 MW of additional PV (4 MW/year pace increase, including 5 MW of small- and medium-scale PVs such as roof-top type) and additional BESS (4 MW / 2 MWh for spinning reserve and 12 MW / 72 MWh for peak shift), it will be possible to supply 100% of renewable energy with only PV + BESS by 2040, as shown in Scenario 4. For reference, the transition of renewable supply share and supply equipment composition in Scenario 3 and Scenario 4 is shown in Figure 5-18.

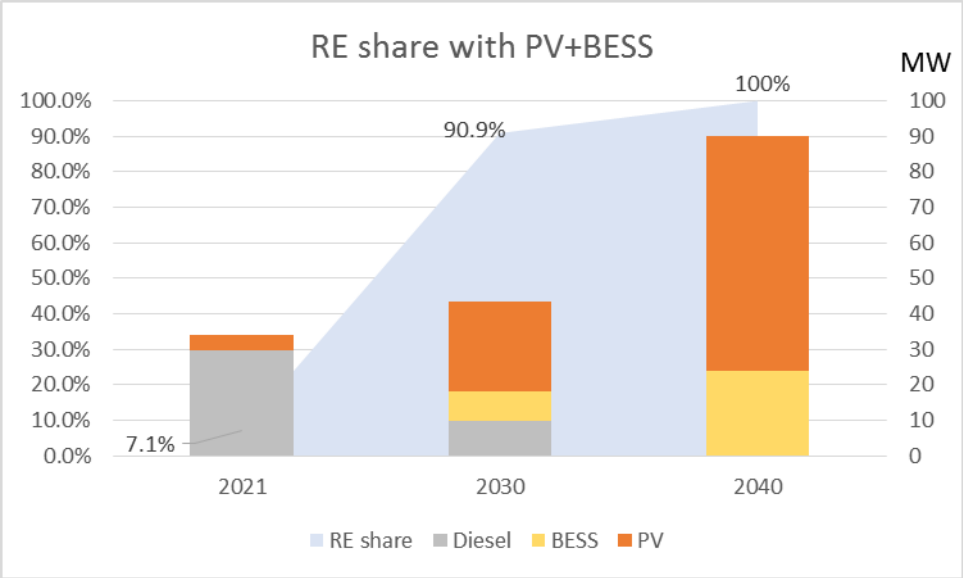

Source: JICA project team

Figure 5-18 Transition of Renewable Energy Share and Installed Capacity

5-7 Confirmation of 2020 results and impact on recommended RE100% scenario

5-7-1 Confirmation of 2020results

According to SP, the peak demand in 2020 was 16 MW, which was not much different from 2019 record. The annual electricity demand was 89GWh, which was not much different as the 2019 record. Therefore, there is no significant impact on the actual demand forecast of electricity demand.
The growth rate of electricity demand in the recommended scenario is 2.0%/year, which is appropriate even considering new demand records.

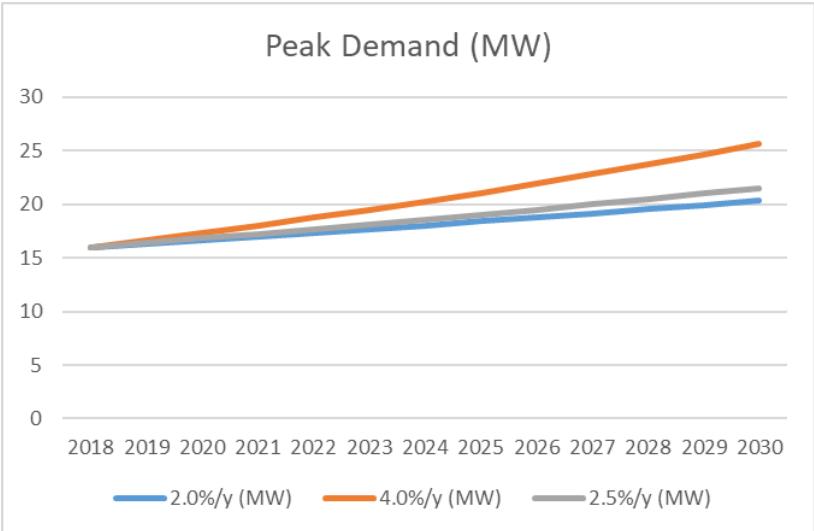

Source: JICA project team

Figure 5-19 Peak demand forecast (MW)

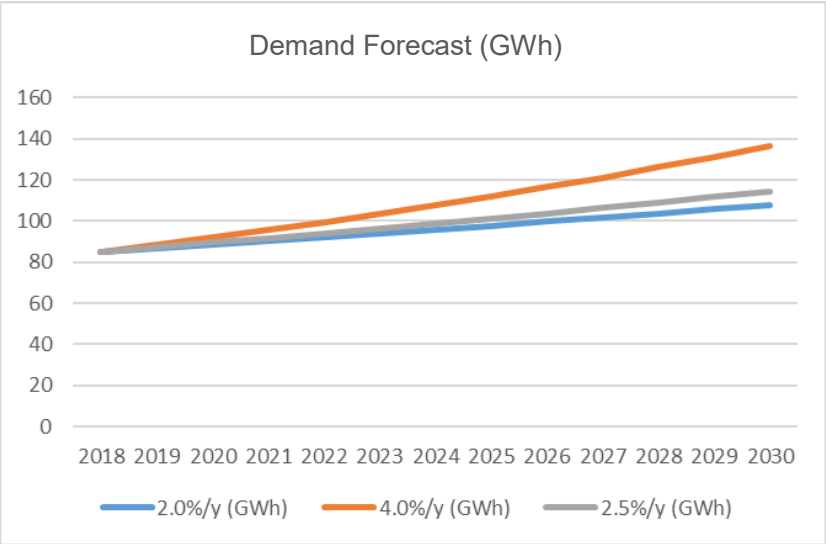

Source: JICA project team

Figure 5-20 Demand forecast (GWh)

5-8 Impact on supply and demand balance

(1) Impact on supply and demand balance in 2025 and 2030

The table below shows the impact of increased demand and the development of PV to the supply-demand balance in 2025 and 2030. In 2030, the amount of PV development will not change, so the amount of diesel power generation will increase by 4GWh due to increased demand, but there is no need to change the amount of diesel capacity. There is no impact on the recommended scenario in 2030 since there is also no change in the amount of electricity generation from hydropower and PV.
On the other hand, in 2025, the additional supply capacity required due to the drastic decrease in PV installed capacity would need to be dealt with by delaying the abolition of one diesel generator (3.8 MW). Therefore, the impact on the supply-demand balance in 2025 has been confirmed by supply-demand simulation.

Table 5-4 Impact of changes in demand forecasts and PV development on recommended scenarios

Scenarios		2025		2030	
		Diesel Generation (GWh)	Renewable rate (%)	Diesel Generation (GWh)	Renewable rate (%)
Scenario3	Demand 2%/y PV 25.27 in 2025	5.766	95.4	11.912	90.9
New	Demand 2.5%/y PV 7.27 in 2025 25.27 in 2030	24.263	78.7	16.203	88.0
Diff		18.497	—	4.291	—

Source: JICA Project Team

(2) Impact on supply and demand balance in 2025

The decrease in PV capacity during the dry season (October) can be dealt with by increasing the generation by diesel power generation.

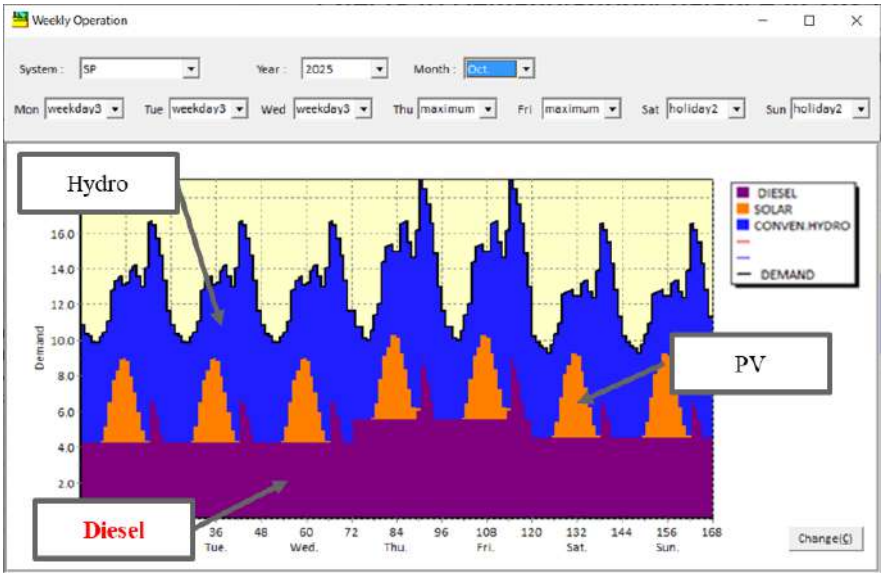

Source: JICA project team

Figure 5-21 Impact on the 2025 dry season (October 2025)

On the other hand, in the rainy season (March) of 2025, it is expected that almost 100% of RE can be supplied by hydropower and PV.

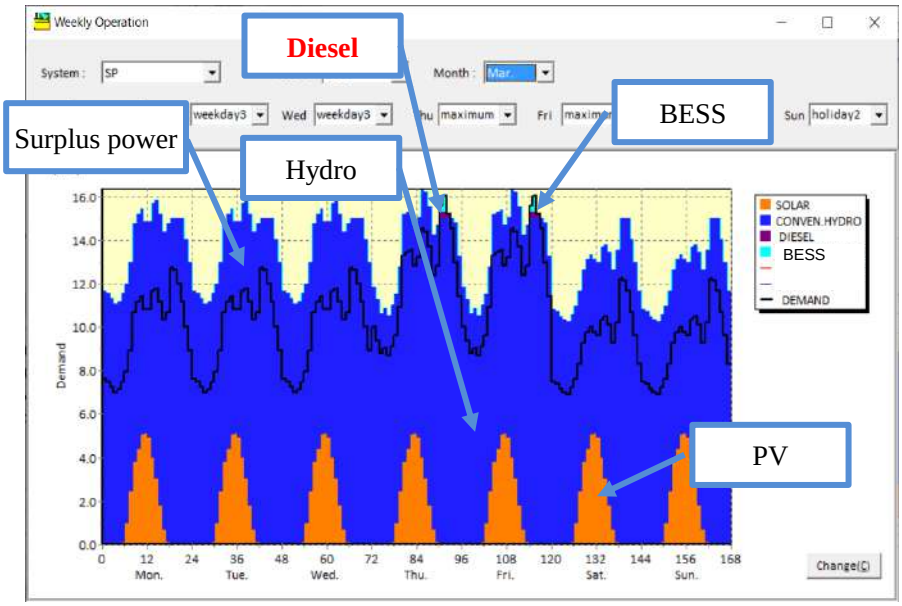

Source: JICA project team

Figure 5-22 Impact on the rainy season of 2025 (March 2025)

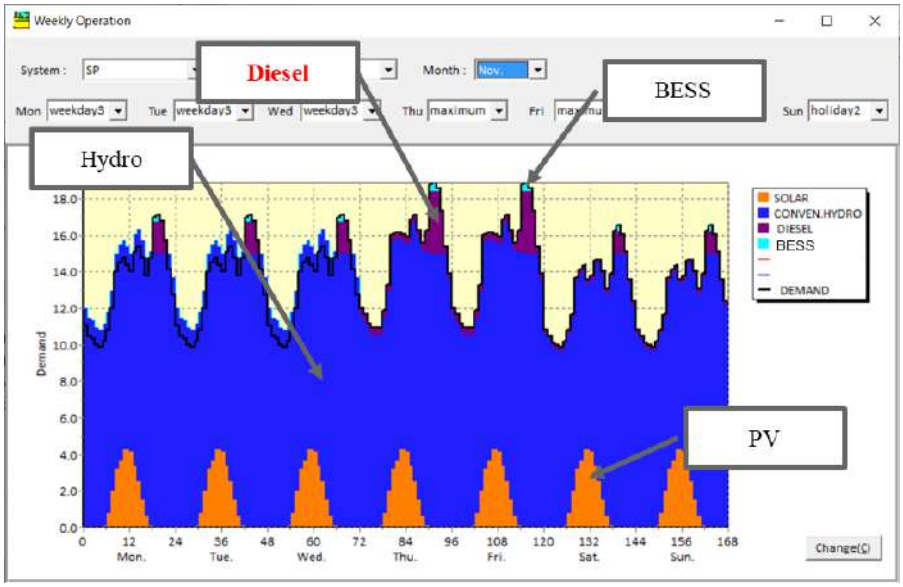

Source: JICA project team

Figure 5-23 Impact on the rainy season of 2025 (November 2025)

5-9 Impact on recommended scenarios

There was no significant impact on electricity demand, but the impact of COVID-19 has delayed PV development. This PV development delay is about four years behind, and it is expected that the current plan will be achieved by 2030.
Therefore, there will be no impact on the recommended RE development scenario up to 2030, "Rainy season RE 100% supply scenario by PV + BESS".

5-10 Consideration of 2030 RE 100% supply scenario

Based on the feasible development plan in the surveys, the recommended scenario is selected a scenario in achieved the maximum RE supply and 100% RE supply in the rainy season realized in 2030.
Besides, SP aims to achieve 100% RE supply in the Honiara system by 2030. A scenario is considered that included additional development of potential RE power supplies to achieve 100% RE supply under 2.5%/year of demand growth.
In Scenario 7 “New Hydropower Additional Development Scenario”, if Komarindi Hydropower (estimated capacity; 6.6 MW) can be additionally developed as the next development of a new site for Tina Hydropower by 2030, it is considered that the Honiara system can be supplied by 100% RE.
Based on the Scenario 7 as an additional development of new hydropower sites, it is considered the possibility of 100% RE supply in 2030 when demand growth is 2.5% / year.
Assuming a 2.5% / year growth in demand, there will be an annual increase in demand of 4.3GWh in 2030. For this reason, it has been examined that only the additional development of Komarindi hydropower in Scenario 7 would not be able to supply 100% RE due to insufficient supply capacity during the night peak in the dry season of year 2030.
Therefore, the following facilities are developed additionally and a supply and demand simulation has been conducted.

- PV : 2MW
- BESS for peak shift : 2MW/8MWh × 1 (one) unit

As a result of the simulation, it is considered that 100% RE can be supplied in 2030 if the conditions for additional development are met. (Refer to the figure below)

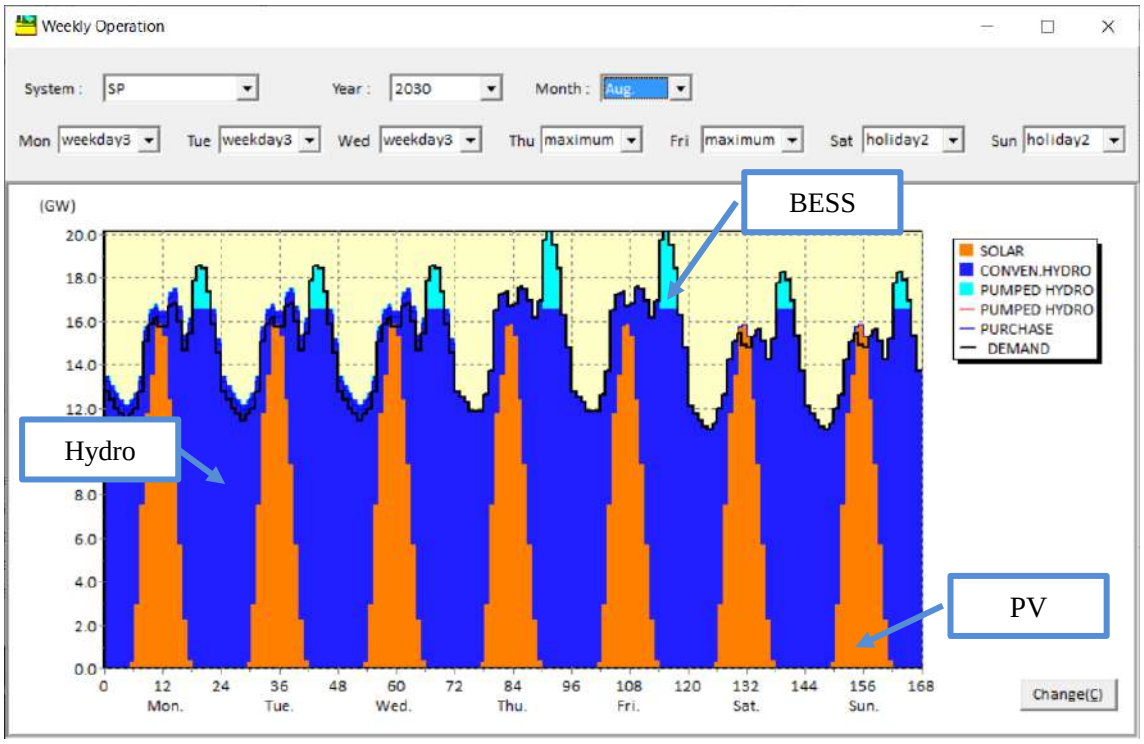

Source: JICA project team

Figure 5-24 Supply/demand balancing in Dry season of 2030 (Aug. 2030)

In order to achieve 100% RE supply in 2030, it is necessary to develop the following equipment by 2030 additionally.

- Komarindi hydropower: 6.6MW
- PV: 20MW
- BESS for peak shift: 2MW/8MWh × 1 unit

In addition, during the off-peak daytime in the dry season, it is necessary to supply only PV, so it is necessary to adopt BESS that has a function of maintain the frequency and voltage of the system.

In addition, it is necessary to further develop PV as a supply capacity in the dry season in line with the growth of demand after 2030. Since the space where PV can be installed is limited and development becomes difficult year by year, further research and development of new hydropower sites or research and development of biomass power generation is required.

5-11 Confirmation of PV development plan status and impact on BESS introduction plan

(1) Confirmation of PV development plan status

Regarding the PV development plan, due to the influence of COVID-19, the new development capacity from 2021 to 2025 is expected to be revised downward from the current plan of 24 MW to 6 MW. Therefore, the amount of PV development in 2025 is expected to decrease from 25.27 MW to 7.27 MW. Due to this effect, the implementation time of PV development is expected to be delayed by about 4 years. On the other hand, the target of PV development of 25.27MW, which is the amount to be introduced in 2030 of the current plan, will be maintained.

Table 5-5 Outlook for PV introduction

Year	2019	2020	2021	2022	2023	2024	2025	2026	2027	2028	2029	2030
PV (MW)	1.1	3.3	4.3	4.3	4.3	4.3	7.27	16.3	18.3	21.3	23.3	25.3

Source: JICA Project Team

(2) Impact on the BESS required amount

The table below shows the results of evaluating the effects of the increase in demand and the delay in development of PV in 2025 by the algebraic method.
Since 7.27 MW of PV will be developed by 2025, according to the algebraic method, BESS for suppressing short-period fluctuations will be required to be 2.37 MW[16] by 2025.
For the BESS unit, 2 MW unit is considered as the standard unit because of the 11kV distribution line capacity and the economic efficiency of the self-excited PCS. Considering the required amount by 2030, it is necessary to introduce two 2MW-1MWh units.
The original plan required the introduction in 2022, but due to changes in the progress of PV development, BESS will be required at the time of introducing a large PV of 4 MW scale by 2025. Therefore, the introduction time of BESS will be delayed by about 3 years from 2025, but it will not affect the scale of introduction.

In addition, in order to supply 100% RE in the rainy season, 18 MW of PV will be developed from 2026 to 2030, and it will be necessary to introduce BESS for peak shift accordingly.

Therefore, BESS needs 4MW-1MWh in 2025 for short-period fluctuations control. The recommended scenario also requires the additional development of a peak shift BESS 4MW-16MWh or 24MWh for 100% rainy season RE supply by 2030.

Table 5-6 PV development capacity and BESS required amount for short-period fluctuation control

YEAR	2025	2030	
PV INSTALLATION	7.27 MW case	21.27 MW case	25.27 MW case
DEMAND 2.0%/Y	2.34	3.94	4.47
DEMAND 2.5%/Y	2.37	3.97	4.5

Source: JICA Project Team

5-12 BESS requirements in the recommended RE100% scenario

5-12-1 Required amount of BESS for short-period fluctuation control (frequency control)

As discussed in the recommended scenario in Chapter 5, two units of 2MW / 1MWh (0.5h) will be required by 2025, taking into account the requirements for 2030. However, this requirement calculation is based on an algebraic method. Therefore, at the time of FS and detailed design, it is necessary to measure the fluctuation of demand and the fluctuation of PV output at a value of about 1-10 seconds, in

[16] Calculate the BESS requirement for short-period fluctuation suppression in 2025 according to the algebraic method described above. Electricity demand in 2025 will be 19 MW, assuming 2.5% / year. The amount of PV development is 7.27 MW. The allowable adjustment balance is 0.63 MW from the demand scale, and the forecast error of demand fluctuation is 2.18 MW. PV prediction error is 1.13MW. The required short-cycle variable storage battery capacity is 2.37 MW when calculated by an algebraic method, taking into consideration that LFC adjustment is not performed in the current system and that PV output is maximized.

order to analyze the fluctuation amount, and examine the required amount.

In addition, it is necessary to determine the required performance and unit capacity of the battery in consideration of the restrictions on the installation space, the economical aspect due to the life, and the duty cycle (charge / discharge pattern).

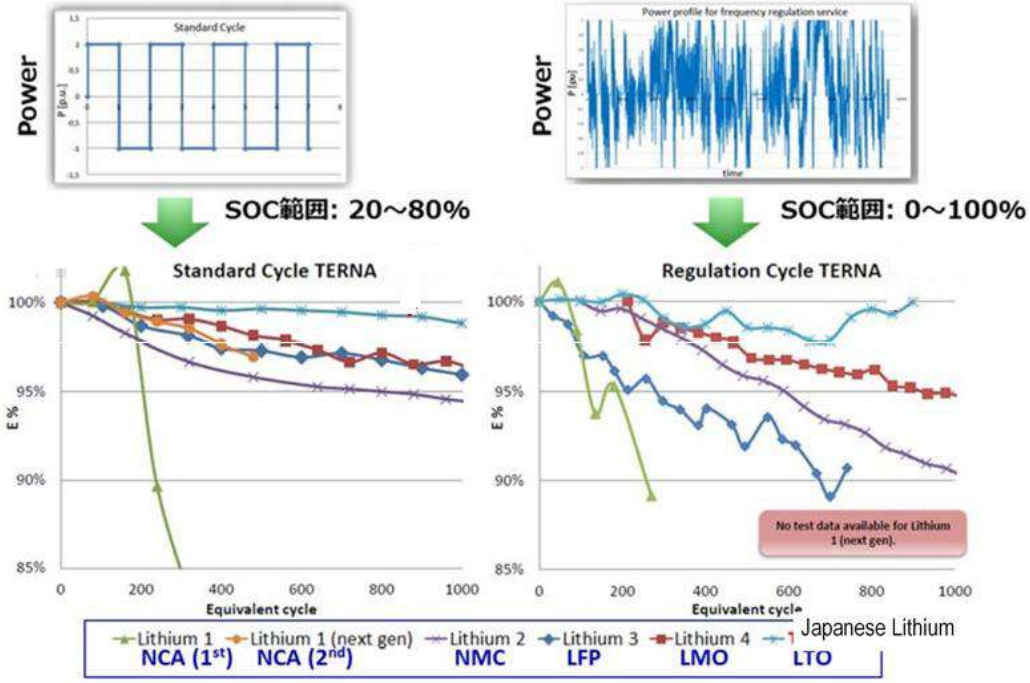

Source: "Experiences and Initial results from Terna's Energy Storage Projects", Mar. 2016, Terna s

Figure 5-25 Actual measurement result of cycle life of storage battery module

(Lithium-ion battery only)

5-12-2 **BESS required amount for long-period fluctuation control (Peak shift)**

The peak shift requirement in the recommended scenario is 4MW / 24MWh (6h) by 2030. Since the battery characteristics and economic efficiency of the BESS capacity for peak shift differ depending on the required daily charge / discharge hours, the economically required BESS capacities in the Honiara system was confirmed by supply/demand simulation.

The JICA study team confirmed the impact on the balance of supply and demand in the 2030 cross section with three patterns of BESS capacity for peak shift of 3 hours, 4 hours, and 6 hours.

There was no significant difference in the balance between supply and demand between the battery capacities of 6 hours and 4 hours. When the battery capacity is 3 hours, the supply capacity is insufficient during night peaks, and it is necessary to increase the number of operating DGs by one. Therefore, a 2MW / 8MWh unit with a 4-hour capacity is used for the peak shift BESS in the Honiara system.

Table 5-7 Impact of changes in BESS capacity on the supply/demand balance (2030)

BESS	**Hour**	**3-hour**	**4-hour**	**6-hour**
	Capacity	**4MW/12MWh**	**4MW/16MWh**	**4MW/24MWh**
	GWh	1.1	1.6	1.6
Diesel	MW	10.0	7.5	7.5
	GWh	16.1	16.2	16.2

Source: JICA Project Team

5-12-3 **Location of BESS site**

(1) Installation of BESS for controlling short-period fluctuations (for frequency control)

Looking at the configuration of the Honiara system, the Lungga power plant and the Honiara power plant are connected by 33kV to form the backbone system. BESS for short-cycle fluctuation control is expected to operate stably when PV disconnected, distribution line is stopped, etc., so it is desirable to install the BESS in the 33kV backbone system. In addition, since BESS adjusts by charging and discharging the fluctuating output from PV, avoiding the charge / discharge current flowing over a wide range will improve the efficiency of the entire Honiara system. From this point of view, it is considered the most effective that the installation at the Lungga power plant to which the PV is connected.

(2) Installation of BESS for long-period fluctuation control (peak shift)

BESS for long-period fluctuation control (peak shift) charges the surplus outputs from PV in the daytime during off-peak hours and discharges it during peak hours at night. In addition, since PV generates electricity for several hours during the day, it is necessary to charge a large amount of electric power in a short time in order to store enough electric power to be supplied to the peak at night. In particular, in order to supply peak demand during the dry season, more charging current will flow than when peaks occur at night. Therefore, it is assumed that the current value for charging exceeds at the night peak demand.

In order to prevent such a wide range of charging current flowing as much as possible, it is considered appropriate to connect the peak shift BESS to the 11kV bus at the substation to which the PV is connected.

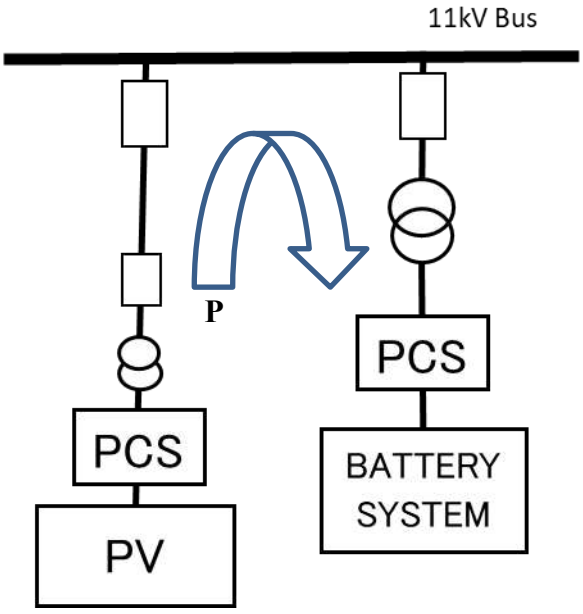

Source: JICA Project Team

Figure 5-26 BESS connection image for long-period fluctuation control (peak shift)

5-13 Conceptual design of BESS

5-13-1 Performance required for BESS

(1) Functions of EMS

To maintain the frequency and voltage of the Honiara system, existing diesel generators (DGs), hydropower (HPP), PV, BESS and, in some cases, demand need to be controlled by EMS. The functions required for EMS are as follows.

1. Demand forecast
2. Forecast of PV outputs
3. HPP, DG economic load distribution operation plan creation
4. HPP, DG, BESS LFC control
5. UFR function (including load suppression)
6. SOC control (cooperates with BESS)
7. Accessing existing SCADA information

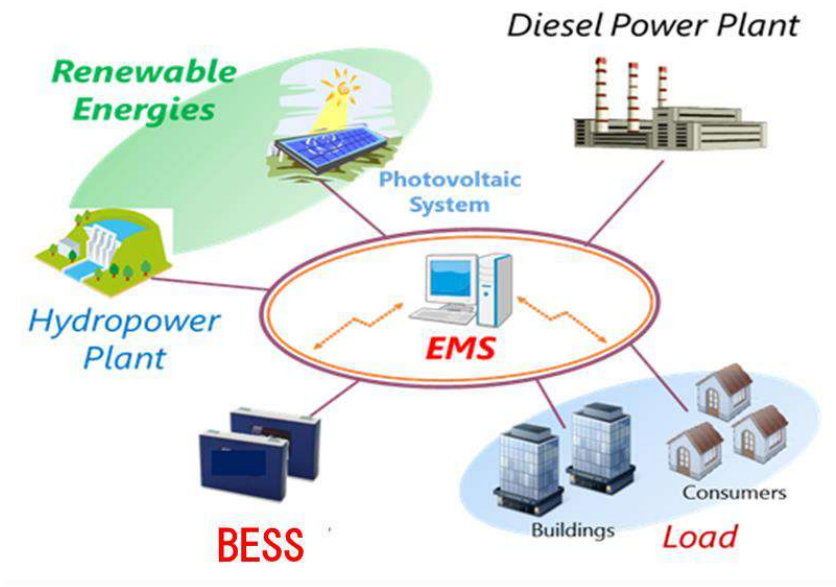

Source: JICA Project Team

Figure 5-27 EMS of the control object

(2) Functions at 100% RE supply

When 25.27 MW of PV is introduced in 2030, the maximum power is 21.5 MW even if the demand growth rate is 2.5%, so PV output is expected that the PV output will exceed the demand during the daytime during the off-peak hours of the dry season. In this case, unless the HPP is operated by suppressing the output of PV or adding BESS to store electricity, the system will be operated only by PV and BESS without a synchronous generator. In this case, if an accident occurs in the system, the other excitation type PCS cannot continue operation due to a sudden drop in the system voltage and will be disconnected instantly. If there is no synchronous generator, there is no system inertia and there is nothing to supply the accident current, so Ry does not operate and the accident cannot be cut off. In such a case, it is necessary to adopt a PCS with a self-exciting function, control the BESS so that the behavior that simulates the inertial force of the synchronous generator can be taken, and provide a VSG function that provides pseudo inertia.

Finally, in order to supply 100% RE, there is a high need for system operation without a synchronous generator due to a transmission line accident of the HPP generator. Therefore, it is necessary to introduce a VSG function that can provide an artificial inertia in the future.

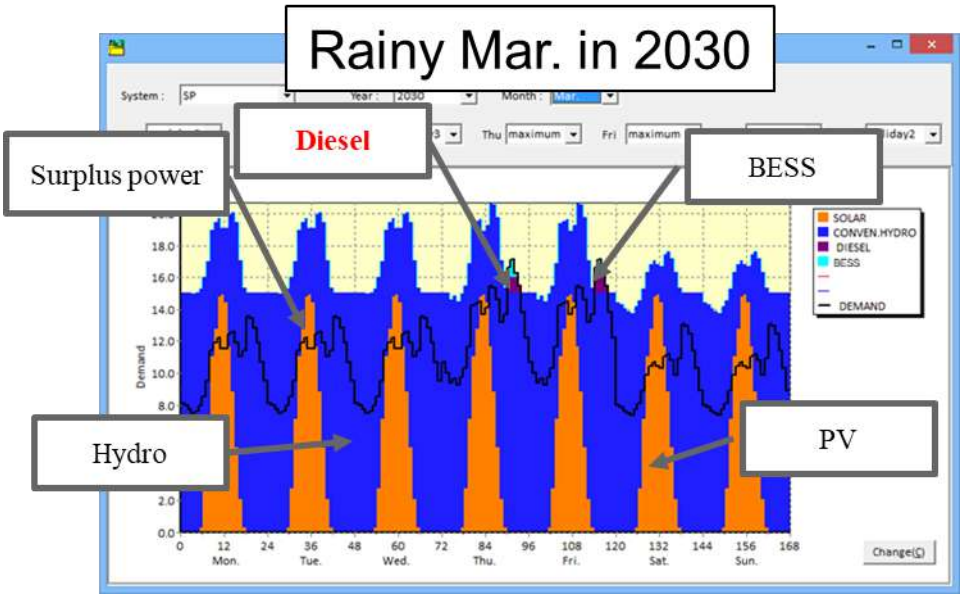

Source: JICA Project Team

Figure 5-28 Supply/demand balance of Rainy season in 2030 (Mar. 2030)

5-13-2 **Study of BESS single-line diagram plan**

Single-line diagram of BESS for short cycle fluctuation control (frequency control) is shown in the figure below.

It was examined by connecting to the 33kV bus of the Lungga power plant. The actual connection point to the bus will be determined by conducting a field survey at the time of the FS survey.

Basically, it is connected by indoor 33kV CB, and the step-up transformer is outdoor type for both 2.5MVA-33 / 11kV and 2.5MVA-1100 / 480V. The 11kV switching equipment will be installed in the same building as BESS. BESS 2MW / 1MWh x 2 units will be installed in a new building inside the Lungga power plant.

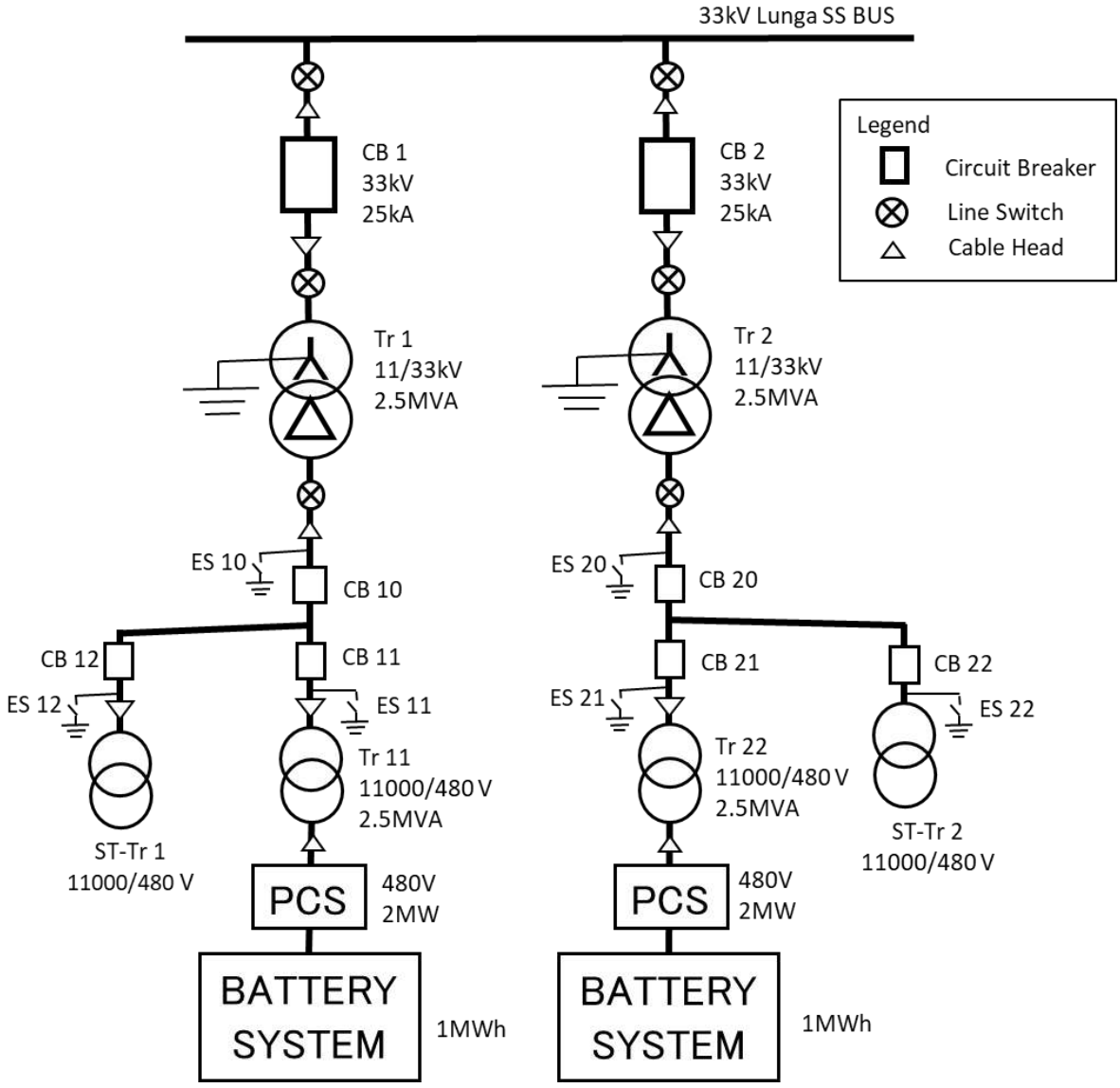

Source: JICA Project Team

Figure 5-29 Single-line diagram of BESS for short cycle fluctuation control (frequency control)

5-13-3 **Layout plan of BESS unit and EMS**

(1) Layout plan of BESS

The BESS 2MW / 1MWh x 2 unit will be installed in a new building inside the Lungga power plant site, and will be in the same building as the 11kV opening / closing equipment for the purpose of shortening the low-voltage wiring.

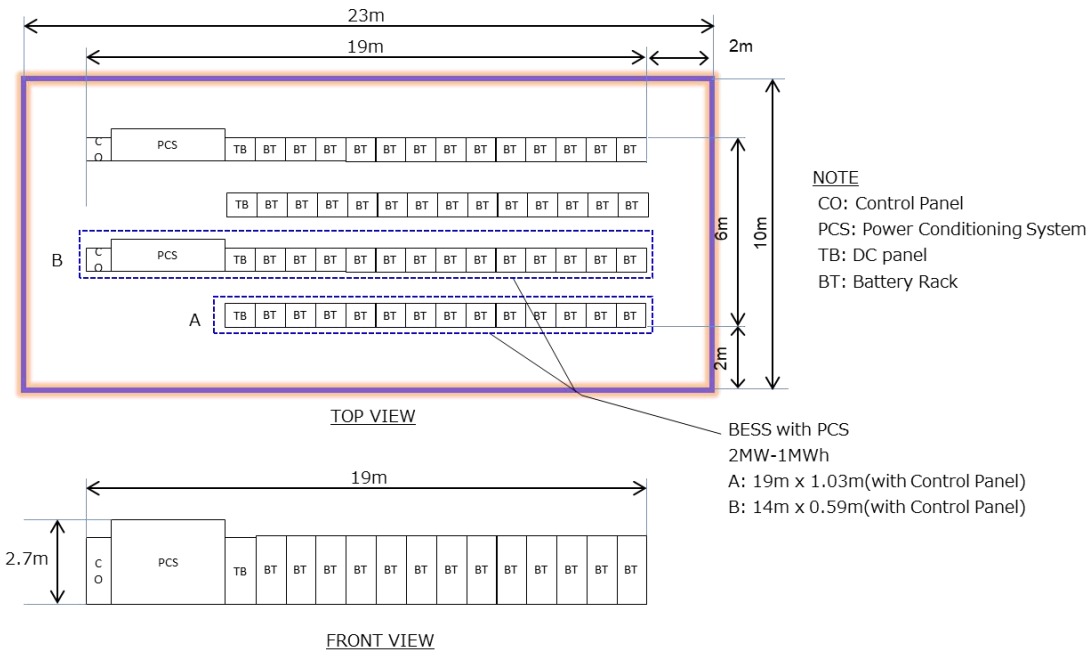

Source: JICA Project Team

Figure 5-30 Layout of BESS units

(2) 33kV and 11kV step-up transformers and switchgear / station use equipment

The mainstream PCS output is about 480V-510V. Since the connection point is the 33kV bus of the Lungga power plant, the voltage is stepped up in two stages from the PCS output of 480V to 11000V and 33000V. The capacity of this step-up transformer is 2.5MVA because the PCS output is 2MW. The 33kV power receiving equipment adopts C-GIS and is installed in the existing Lungga power plant.

Since the output of BESS is 2MW, a current of over 2,800A at low voltage of 480V. For this reason, the low-voltage side cable requires about 4 bundles with a large diameter of CVT500 mm2, and a single of CVT100 mm2 is sufficient for the 11kV side, so it is more economical to draw the cable on the 11kV side. Therefore, the 11kV switchgear and on-site equipment will be installed in the same building as BESS and PCS, and will be connected to the 11 / 33kV power receiving transformer with an 11kV cable.

The 11kV switchgear requires 4 metal claddings per BESS unit. This is installed by extending 8 panels of 2 units by 5 m in the short direction (W) in the same building as BESS and PCS, and adding 1 room. Therefore, the size of the building is W15m, L25m, H4m. The drawing below does not consider the wall thickness.

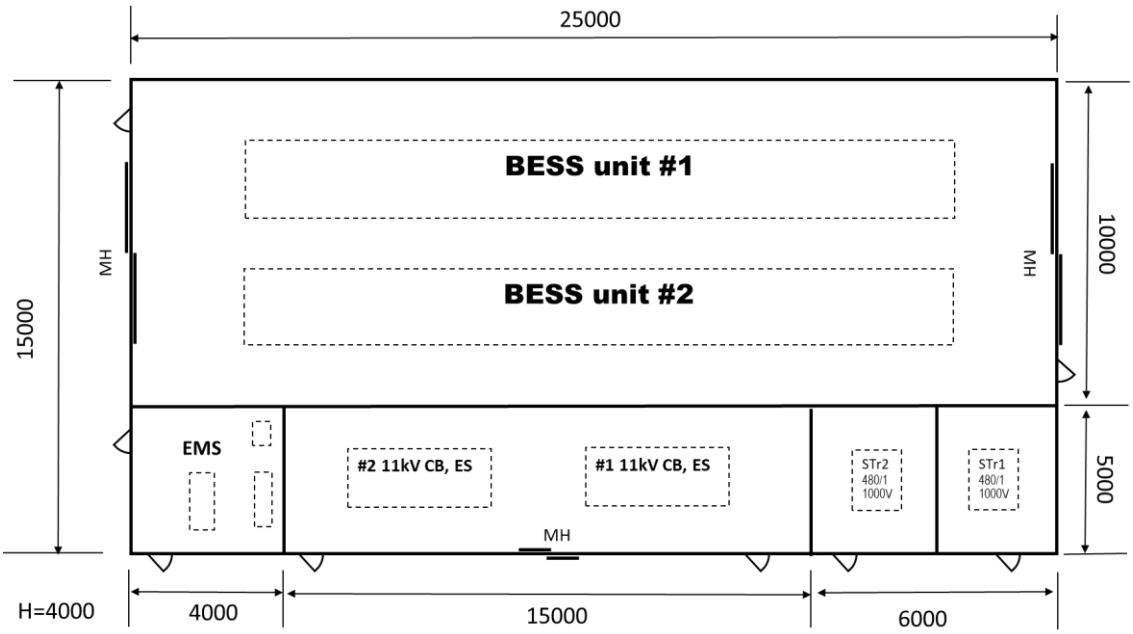

Source: JICA Project Team

Figure 5-31 BESS unit and 11kV switchgear / station use equipment layout design

Examination of cable layout of 33kV and 11kV step-up transformers and switching equipment needs to be carried out by conducting a field survey at the time of FS survey and detailed design.

(3) Layout plan of EMS

The EMS layout plan is shown in the figure below. With this layout, it can be installed inside the new building of BESS.

Since the Lungga power plant is also planned to install a 66kV bus and a 66 / 33kV transformer to which the Tina hydroelectric power plant is connected, it is necessary to coordinate the 66kV equipment new design plan at the time of FS and detailed design.

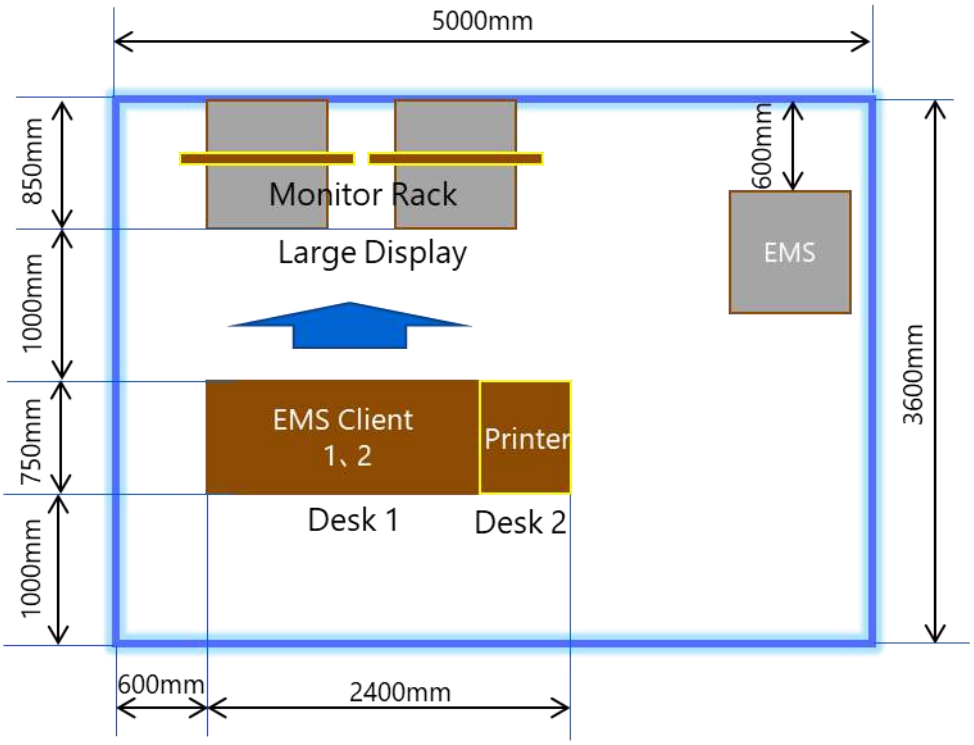

Source: JICA Project Team

Figure 5-32 Layout plan of EMS

5-13-4 **Construction of BESS project**

(1) Estimated construction costs

Construction costs of BESS and system connecting equipment for short cycle fluctuation control (frequency control), and protection & control equipment was examined. The estimated total project amount is as follows.

Estimated total amount of the project: 1,450 million yen (13.2 MUSD[17])

Break downs are as follows.

a. Main equipment: 8.4 MUSD

１. BESS：2MW/1MWh Lithium Battery 2 units

２. EMS

・Required functions

a. Demand forecast

b. Forecast of PV outputs

c. Economic load distribution operation plan for HPP and DG

d. HPP, DG, BESS LFC control

[17] 1USD=¥110

e. UFR function (including load suppression)

f. SOC control (cooperates with BESS)

g. Accessing existing SCADA information

・Including instruments and equipment.

b. Transportation, Engineering, Installation, Test & commissioning: 4.8 MUSD

３. System connecting facilities

a. Main Transformer 33/11kV-2.5MVA×2 units, Factory test

b. Transformer (Step up) 11kV/480V-2.5MVA×2 units, Factory test

c. Station use Transformer 11kV/480V 2 units

d. Switchgear（33kV、25kA C-GIS）×2 units, Factory test

e. Switchgear（11kV、2 Feeders）

f. Protection 1 set

４. Construction ; Civil, fitting, transportation, test and commissioning

a. Building for BESS (BESS, EMS, 11kV switchgear, station use equipment)

1 set (Civil works, Building, Electric works, Communication works）

b. BESS installation adjustment (domestic transportation, installation, test, SV)

c. EMS installation adjustment (domestic transportation, installation, test, SV)

d. Transformer and Switchgear installation adjustment (domestic transportation, installation, test, SV)

e. Power cable laying (including materials and construction)

f. Communication line laying (between EMS and generator, between EMS and SCADA, both lumber workers)

g. Air conditioner for BESS, UPS installation

h. Installation of fire prevention equipment, etc.

５. Engineering

a. Bidding

b. Supervising

c. O&M training

(2) Tentative Schedule of the BESS project

The tentative schedule of the project is shown in the table below.

BESS, EMS equipment and new building construction are bid as one lot, and it is assumed that commissioning lasts 18 months after the contractor is decided.

Table 5-8 Tentative schedule of the BESS project

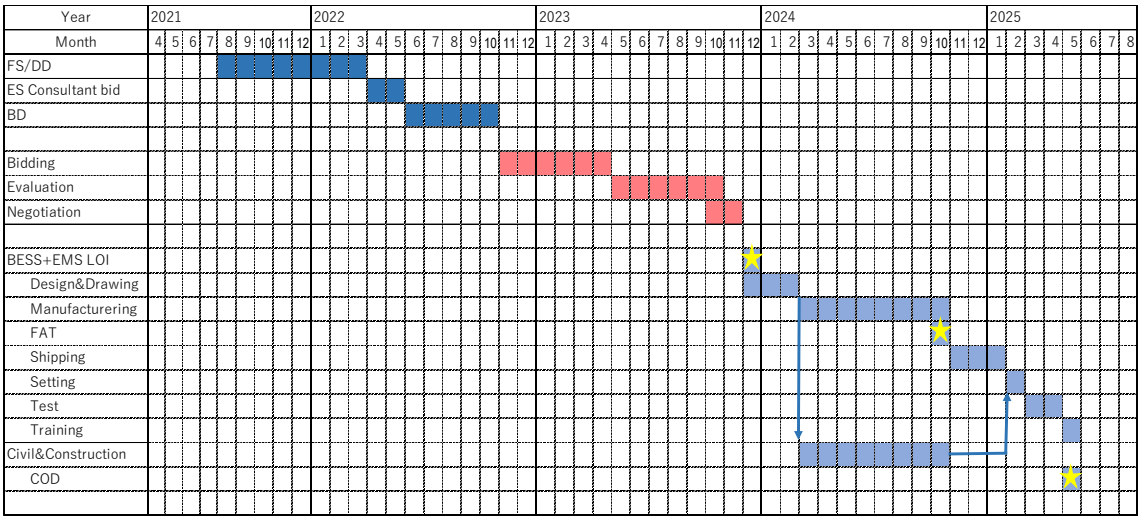

Source: JICA Project Team

5-14 Power System Planning

The main system of the current Honiara grid is configured to connect six substations (two of which have main power plant) with 33 kV transmission lines. In the future, 66 kV system will be introduced along with the development of the Tina hydropower plant (15 MW).
The power generated at the Tina Hydropower Plant will be transmitted to the newly constructed Tanagai Substation and the existing Lungga Substation on the west side via a new 66 kV transmission line. Figure 5-33 shows the Honiara power system around 2030.

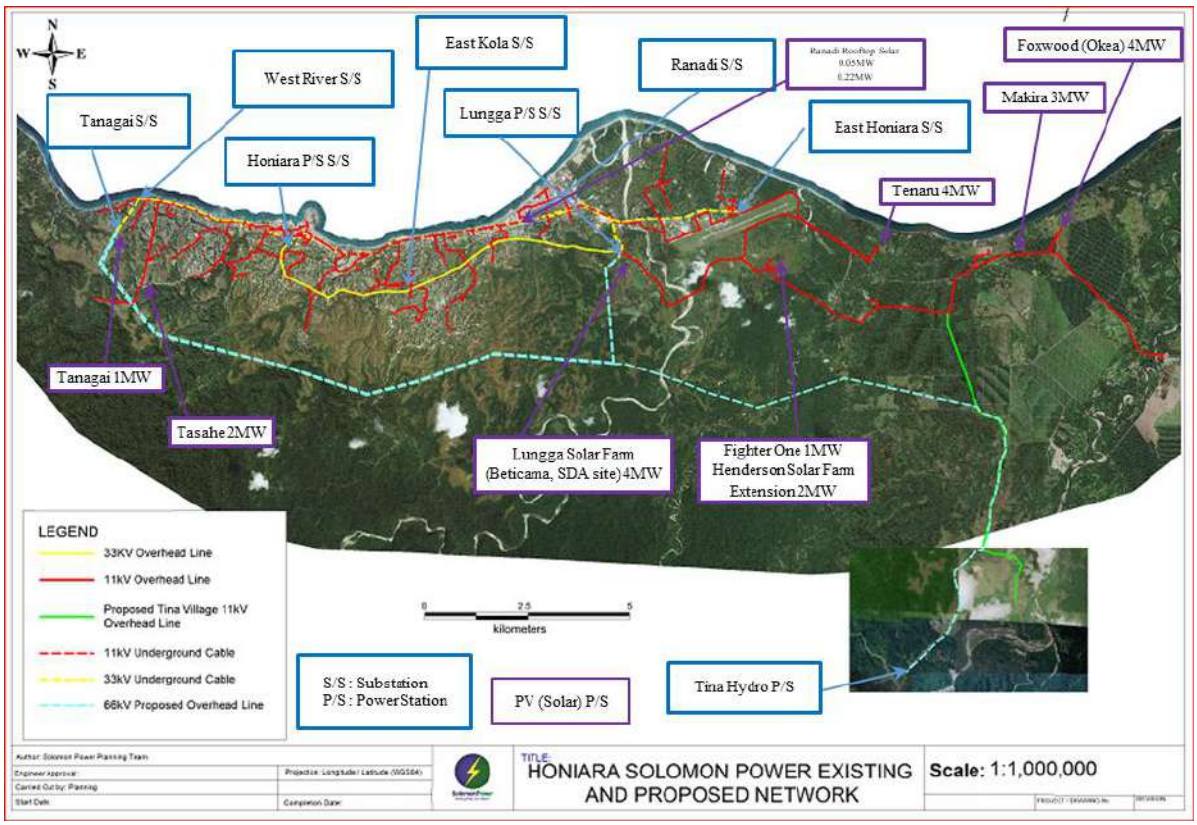

Source: Created by JICA Project Team based on materials provided by SP

Figure 5-33 Honiara Power System around 2030

Regarding the review of the system expansion plan for 2022 (Solomon Power Network Development Plan 2017 – 2022), which was formulated in October 2017, we confirmed in the second field work that SP is beginning to review it towards 2020.
The planning criteria in the SP are shown in Table 5-9.

Table 5-9 Transmission Planning Standard in SP

Item	Reference
System Frequency Variation	Normal operation:50 Hz ± 2% Emergency operation: 50 Hz ± 4%, and never without ± 3% limits for more than 0.5 second.
System Voltage Variation	Normal operation : ± 7% Emergency operation: ± 10%
Security (Contingency)	N-0 criterion is only applied. N-1 criterion is not applied.

N-0: All of transmission lines and grid transformers are in healthy condition.
N-1: Single circuit or grid transformer is out-of-service due to accident.

Source: Created by JICA Project Team based on materials provided by SP

5-15 Power System Analysis

During the second field survey, the analysis status of each year (2020, 2025, 2030) conducted by the SP was to be confirmed, but the SP had not yet analyzed. Therefore the project team received the PowerFactory data including the load data for each year, converted it to PSS / E data, and adjusted the data so that it matches the demand forecast used in the generation planning, and promoted the analysis.

When the project team analyzed data for each year (2020, 2025,2030) created by the SP and checked it, the project team supplemented the data because some of the PVs shown in Table 2-10 were not simulated and the analysis were proceeded.

In the third field survey, the transmission line will be overloaded when multiple PVs in the east are connected to one 11 kV system.

To stabilize the frequency in Honiara system with consideration of the scale of total demand of Honiara system and the amount of BESS introduced, it was recommended that the generated power by PVs connected per circuit should be up to 4 MW, and the JICA Project Team decided to formulate a transmission plan based on this policy.

In addition, since the data for stability analysis was not available on the SP side, a dynamic analysis was not performed.

5-15-1 Load Condition

The loads used in the simulations in 2020, 2025 and 2030 are assumed as follows.

(1) Daytime Peak Load

The daytime peak load is assumed as shown in Table 5-10 with an annual growth rate of 2% based on the generation planning.

Table 5-10 Assumption of Daytime Peak Load of Honiara Grid

→Assumption

Year	2018	2019	2020	2021	2022	2023	2024	2025	2026	2027	2028	2029	2030
Daytime System Peak Load （Receiving End in MW）	16.0	16.3	16.6	17.0	17.3	17.7	18.0	18.4	18.7	19.1	19.5	19.9	20.3
Annual Growth Rate	-	2%	2%	2%	2%	2%	2%	2%	2%	2%	2%	2%	2%

Source: JICA Project Team

(2) Nighttime Peak Load

Nighttime peak was calculated by multiplying the daytime peak value shown in Table 5-10 by the ratio (0.942) shown in Table 5-11 on March 13, 2019. Table 5-12 shows the nighttime peak assumption of the Honiara system.

Table 5-11 Ratio of Daytime Peak Load to Nighttime Peak Load of Honiara Grid

Record of peak load (March 13, 2019)	
Daytime peak load at 11 am in kW	15996
Nighttime peak load at 4 pm in kW	15069
ratio	0.942

Source: SP

Table 5-12 Assumption of Nighttime Peak Load of Honiara Grid

→Assumption

Year	2019	2020	2021	2022	2023	2024	2025	2026	2027	2028	2029	2030
Nighttime System Peak Load （Receiving End in MW）	15.4	**15.7**	16.0	16.3	16.6	17.0	**17.3**	17.7	18.0	18.4	18.7	**19.1**
Annual Growth Rate	-	2%	2%	2%	2%	2%	2%	2%	2%	2%	2%	2%

Source: JICA Project Team

5-15-2 Generation Condition

The generator outputs used in the simulation are shown in Table 5-13 and Table 5-14.

Table 5-13 Generator Output Power (PV capacity based on the current SP's plan)

year	Load Condition	PV (existing & planned)	Hydro (Tina)	Diesel (Lungga)	Calculation Result
		Operational Limit			
		21.27 MW ×80%	18.75 MW ×67%	37.125 MW ×80%	
2020	Daytime Peak	Max. (80%)	-	Balanced	Appendix 5-1A&B
2020	Nighttime Peak	0%	-	Balanced	Appendix 5-2A&B
2025	Daytime Peak	Max. (80%)	Balanced	0%	Appendix 5-3A&B
2025	Nighttime Peak	0%	Max. (67%)	Balanced	Appendix 5-4A&B
2030	Daytime Peak	Max. (80%)	Balanced	0%	Appendix 5-5-A&B
2030	Nighttime Peak	0%	Max. (67%)	Balanced	Appendix 5-6A&B

Source: JICA Project Team

Table 5-14 Generator Output Power (Additional PV planning case)

Year	Load Condition	PV (existing&planned)	PV (Additional)	BESS (Battery Energy Storage System)	Hydro (Tina)	Diesel (Lungga)
		Operational Limit				
		21.27 MW ×80%	4 MW ×80%	±4 MW×2	18.75 MW ×67%	37.125 MW ×80%
2030	Daytime Peak	Max. (80%)	Max. (80%)	3.2 MW Charging mode	Balanced	0%
2030	Nighttime Peak	0%	0%	Balanced Discharging mode	Max. (67%)	0%

Source: JICA Project Team

As a candidate for installation of additional PV (4 MW × 1 location) and peak shift BESS (4 MW / 24 MWh × 1 location) added on the base scenario to achieve 90% supply rate from renewable energy, PV power plants are unevenly distributed in the east on the current plan. Therefore, it was assumed to be installed in the west White River area.
In addition, BESS (4 MW / 2 MWh × 1 location) for frequency stabilization was assumed to be installed at the 33 kV bus of the Lungga substation in consideration of security.

5-15-3 Analysis Result

(1) Current PV plan case

Power flow diagrams of the calculation results corresponding to Table 5-13 are shown in Appendix 5-1A&B to Appendix 5-6A&B.

(a) Overload equipment (transformer)

66 kV / 33 kV transformer: no overload
33 kV / 11 kV transformer: no overload
11 kV / 0.4 kV Transformer: overload

Measures to be taken by 2020
- 10 units

Measures by 2025
- 1 unit

Measures to be taken by 2030
- 9 units

The above is due to increased demand.
The details are shown in Table 5-15.

Table 5-15 Overloaded 11 kV / 0.4 kV Transformers

No.	Name of Transformer	Rated Capacity in KVA	Day Peak			Night Peak		
			2020	2025	2030	2020	2025	2030
1	**T701**	200	122%	129%	145%	114%	123%	139%
2	**T709**	300	119%	125%	142%	111%	120%	136%
3	**T706**	30	106%	111%	125%	99%	107%	120%
4	**T707**	10	155%	162%	182%	145%	156%	176%
5	**T708**	300	99%	104%	117%	93%	100%	112%
6	**T251**	500	102%	110%	124%	95%	104%	117%
7	**T006**	100	118%	127%	143%	110%	120%	135%
8	**T059**	200	103%	111%	126%	96%	105%	118%
9	**T465**	200	115%	125%	141%	107%	118%	133%
10	**T613**	100	153%	167%	189%	142%	158%	178%
11	**T615**	200	138%	151%	171%	128%	142%	161%
12	**T711**	200	84%	89%	100%	79%	85%	96%
13	**T054**	100	85%	92%	104%	79%	87%	97%
14	**T011**	100	86%	92%	104%	80%	87%	98%
15	**T051**	100	88%	96%	108%	83%	91%	102%
16	**T459**	200	87%	94%	107%	81%	89%	100%
17	**T607**	300	88%	96%	108%	83%	91%	102%
18	**T601**	100	85%	92%	103%	79%	87%	98%
19	**T508**	300	92%	99%	113%	86%	95%	106%

Source: JICA Project Team

(b) Overload equipment (transformer)

66 kV Transmission line: no overload
33 kV Transmission line: no overload
11 kV Transmission line: overload

Measures to be taken by 2020
- None

Measures be taken by 2025
- Two transmission lines

Measures to be taken by 2030
- None

In the above, one transmission line is due to an increase in load, and one line is due to installation of PVs.
Details are shown in Table 5-16.

Table 5-16 Overloaded 11 kV Transmission Lines

No.	Section of transmission line	Distance in km	Type	Voltage in kV	Rated Capacity in MVA	Day Peak 2020	Day Peak 2025	Day Peak 2030	Night Peak 2020	Night Peak 2025	Night Peak 2030
1	T601 - T606	0.45	HDC 7 / 1.00	11	1.3	91%	99%	112%	85%	94%	106%
2	Lungga 11 kV Bus - Terminarl 214	5.29	ACSR/G2 Banana 6/1/3.75	11	5.2	44%	153%	138%	5%	6%	5%
	Terminarl 214 - Terminal 229	7.83	ACSR/G2 Banana 6/1/3.75	11	5.2	4%	107%	98%	4%	4%	4%

Source: JICA Project Team

(c) Measures for overload equipment

For 11 kV / 0.4 kV transformers, measures will be taken to increase or replace transformers due to increased demand.

For the No. 1 of 11 kV transmission lines T601-T606, a replacement of conductor will be performed due to increased demand.

0.45 km HDC 7 / 1.00 → ACSR / G2 Banana 6/1 / 3.75

The power flow diagram after the above two measures is as shown in Appendix 5-7A& B.

Regarding the measure for No. 2 of 11 kV transmission line, since a large amount of PV is connected, new transmission lines will be installed so that the amount of PV connection per circuit will be within 4 MW.

Figure 5-34 shows the original power flow diagram without reinforcement for No. 2 in Table 5-16 at the peak of the daytime in 2030. (For details, see Appendix 5-7A& B)

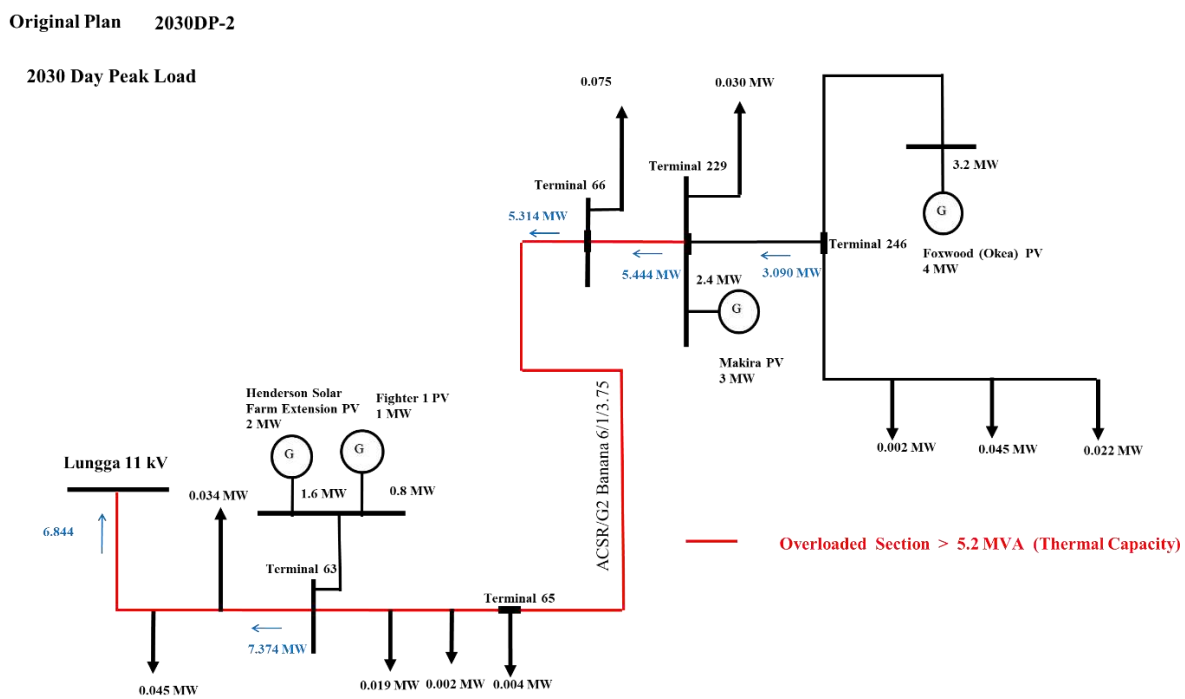

Source: JICA Project Team

Figure 5-34 Power flow diagram in 2030 at daytime peak load

(Original plan without No2 reinforcement)

The following two plans of "Plan A" and "Plan B" were examined as No.2 countermeasures.

【Plan A】

Two new 11 kV transmission lines will be constructed from the 11 kV bus at the East Honiara substation.

Figure 5-35 shows the power flow diagram with above measures. (For details, see Appendix 5-8A& B)

As it can be seen from this figure, two new transformers will be added because the existing transformer (33 kV /11 kV 3.5 MVA) at the East Honiara substation is overloaded.

In addition, the existing 33 kV Lungga-East Honiara transmission line will be overloaded, so a new 33 kV transmission line will be installed in the same section.

Figure 5-36 shows the power flow diagram with the above measures. (For details, see Appendix 5-9A&B)

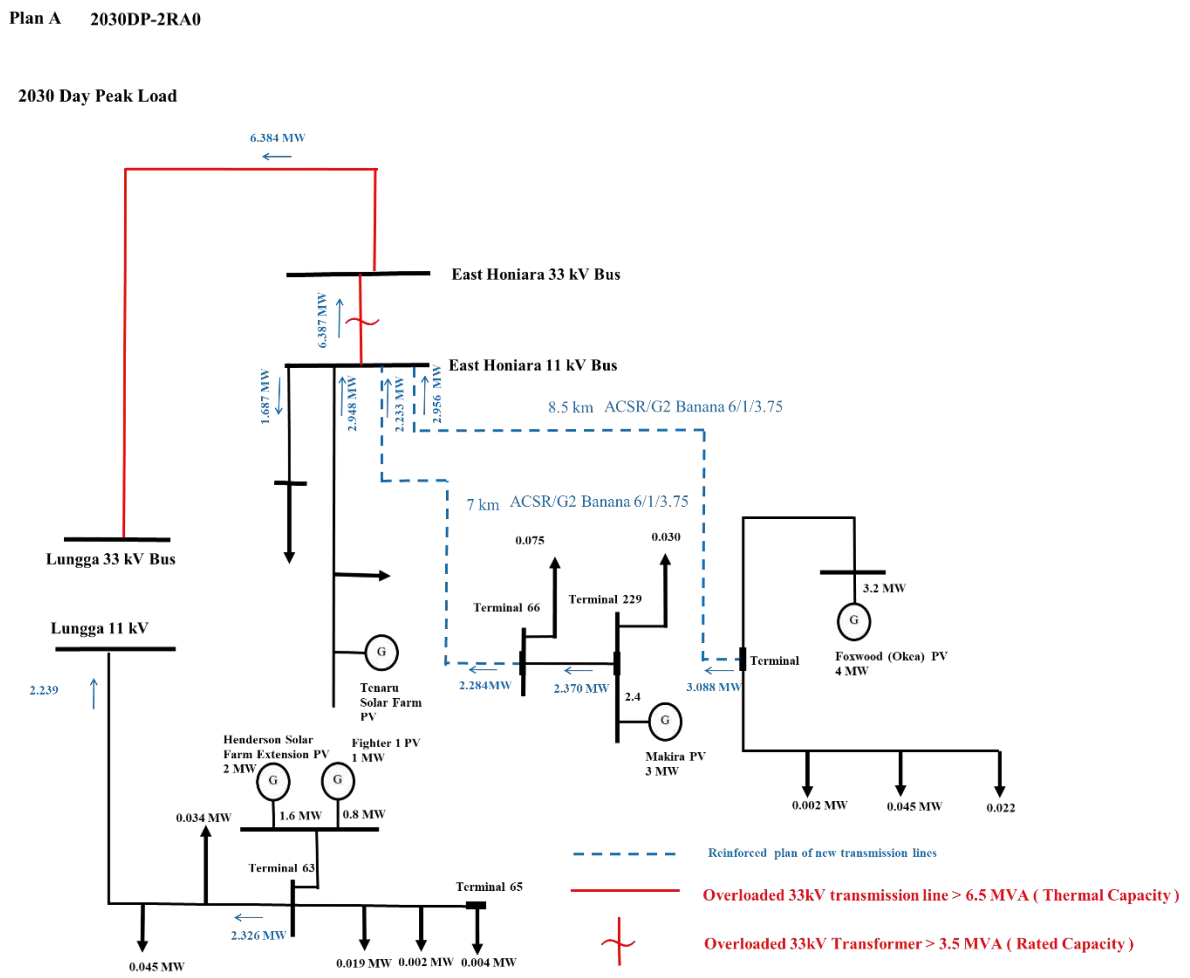

Source: JICA Project Team

Figure 5-35 Power Flow Diagram in 2030 at Daytime Peak Load

(Plan A with reinforcement of 11 kV transmission lines only)

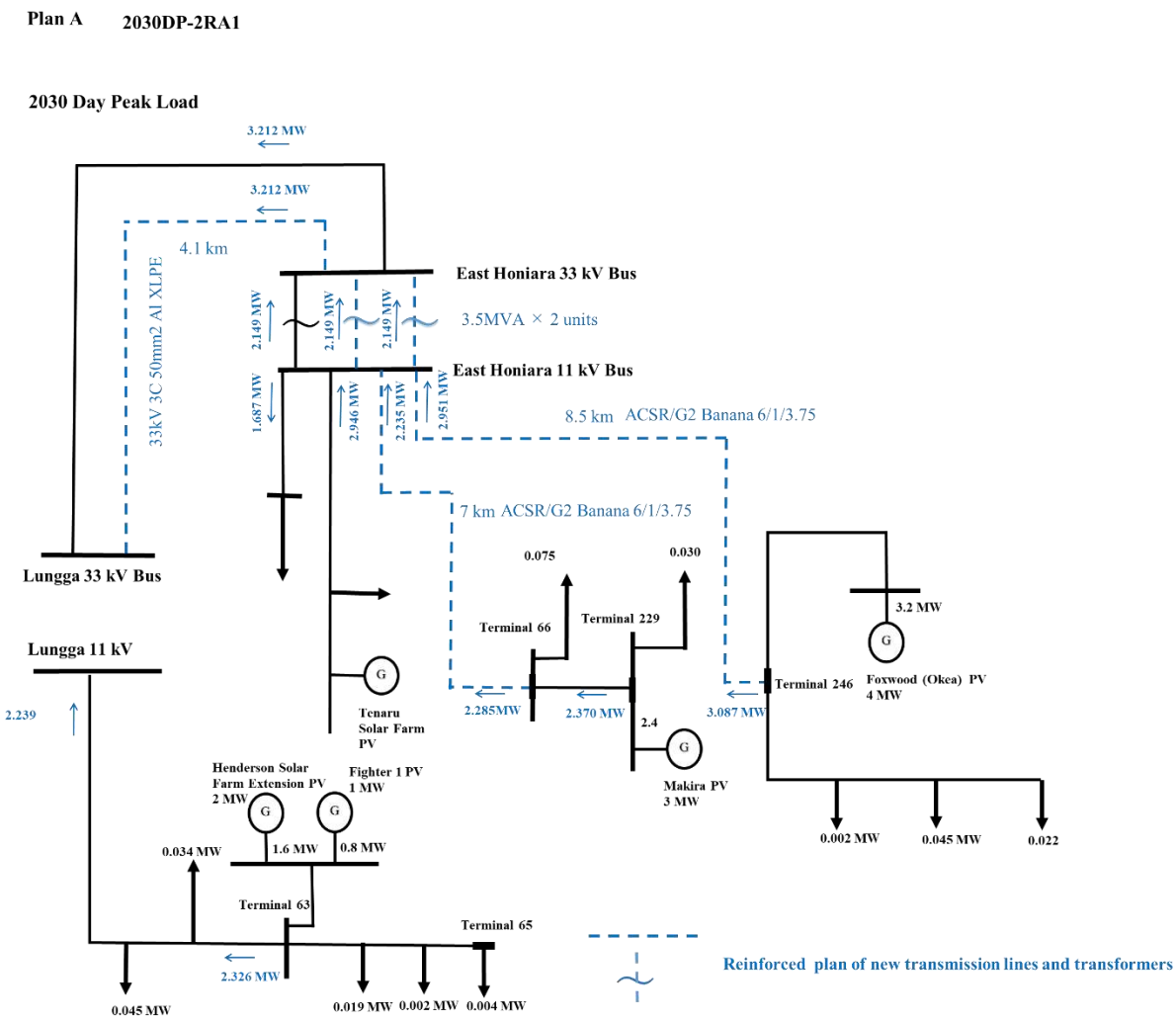

Source: JICA Project Team

Figure 5-36 Power Flow Diagram in 2030 at Daytime Peak Load
(Plan A with reinforcement of 11 kV transmission lines,
33 kV transformers and a 33 kV transmission line)

【Plan B】

One 11 kV transmission line will be newly constructed from the 11 kV bus at East Honiara Substation.

One new 11 kV transmission line will be constructed from the 11 kV bus at Lungga Substation.

Figure 5-37 shows the power flow diagram with the above measures. (For details, see Appendix 5-10A& B)

As it can be seen from this figure, the existing transformer (33 kV / 11 kV 3.5 MVA) at the East Honiara substation is overloaded and one more unit will be added.

Figure 5-38 shows the power flow diagram with the above measure. (For details, see Appendix 5-11A&B (Daytime) and Appendix 5-12A&B (Nighttime))

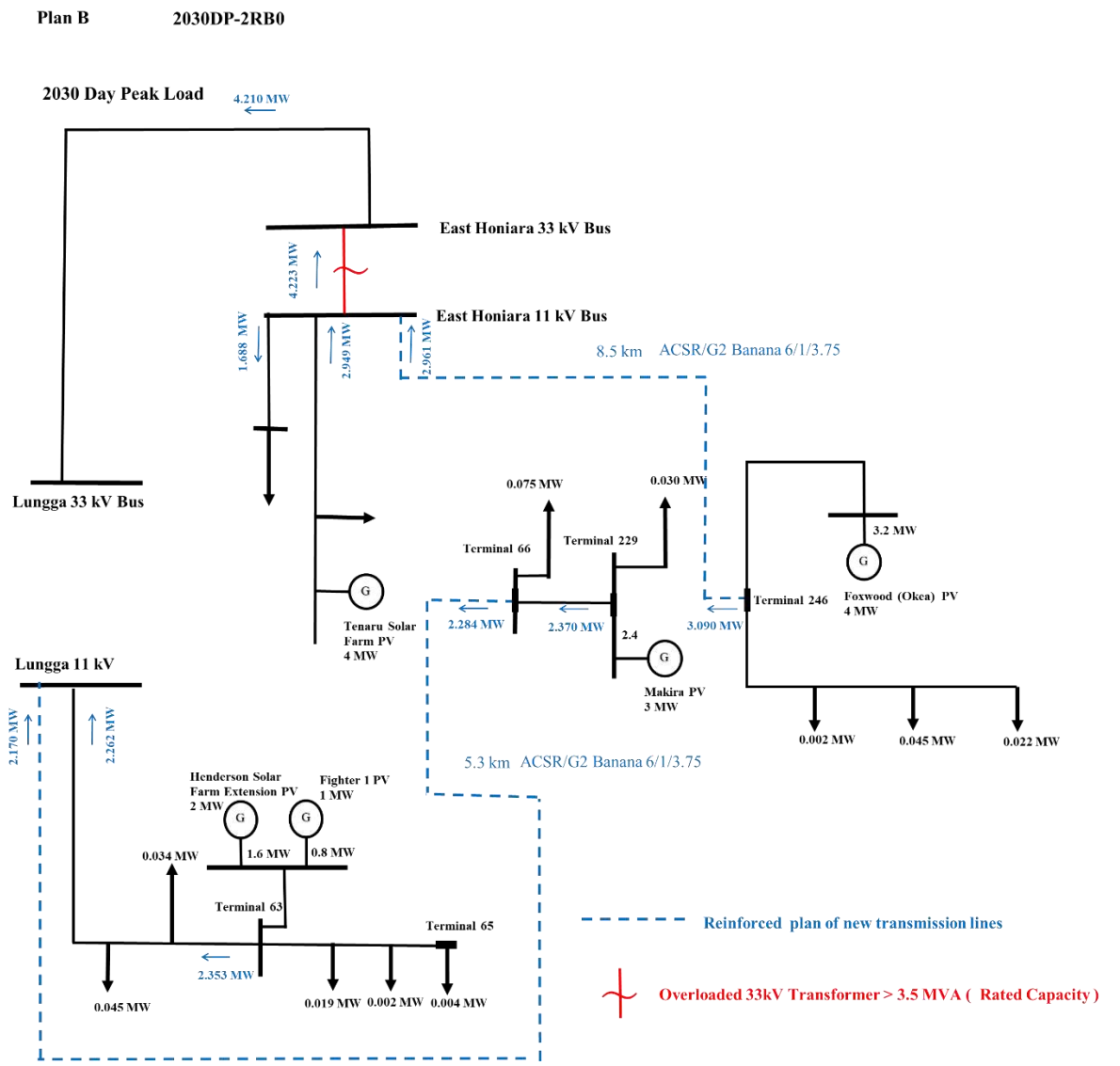

Source: JICA Project Team

Figure 5-37 Power Flow Diagram in 2030 at Daytime Peak Load

(Plan B with reinforcement of 11 kV transmission lines only)

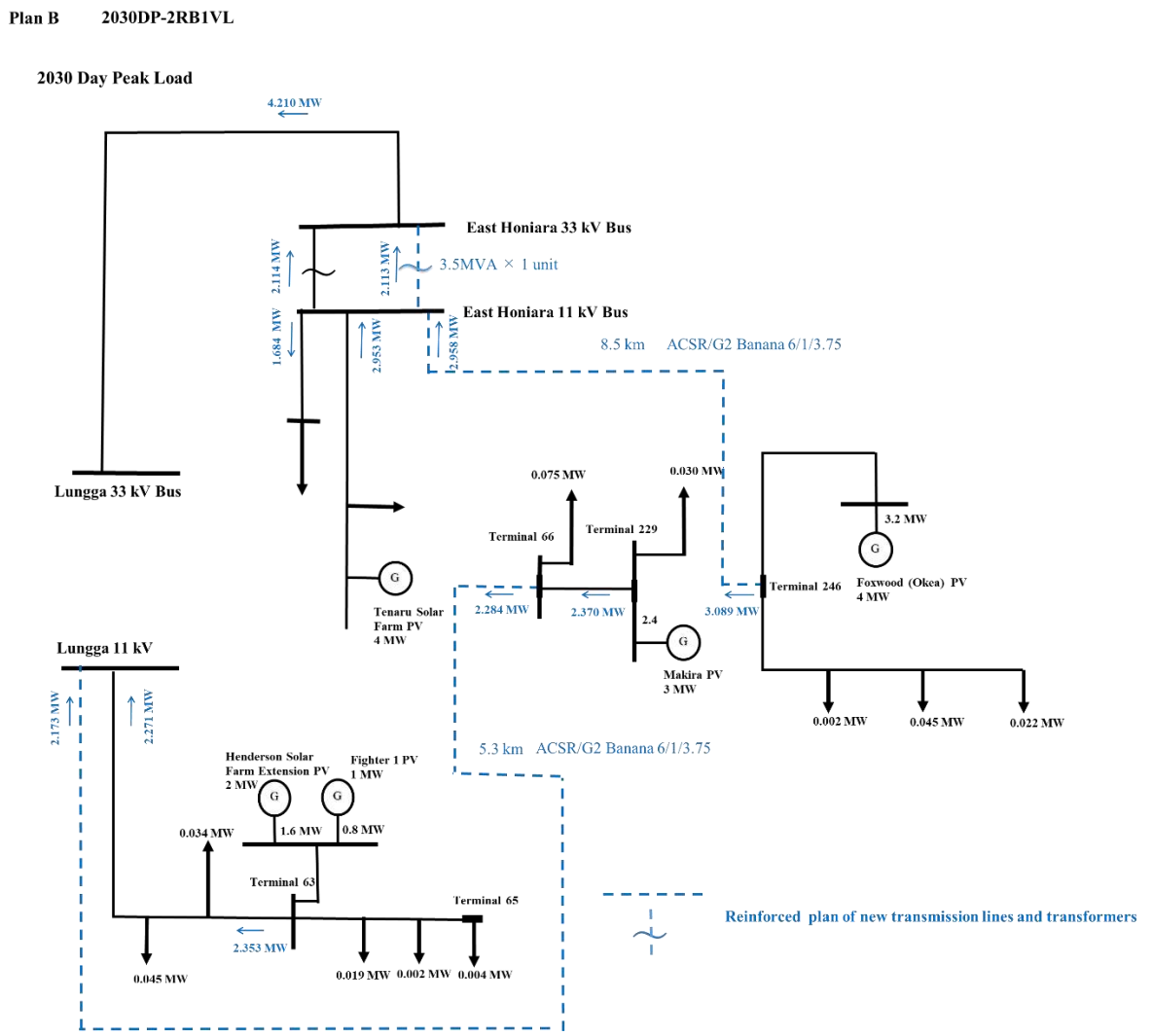

Source: JICA Project Team

Figure 5-38 Power Flow Diagram in 2030 at Daytime Peak Load

(Plan B with reinforcement of 11 kV transmission lines and a 33 kV transformer)

【Construction Costs】

Table 5-17 shows the unit construction costs. Table 5-18 and Table 5-19 show the results of examining additional transmission line construction costs in each plan based on the unit costs in Table 5-17. Superior in terms of cost, Plan B is taken as reinforcement measures.

Table 5-17 Unit Costs of Transmission Construction

Unit Cost								Source
11 kV Transmission Line	Overhead Line			80	Thousand USD	/	km	Solomon Power
33 kV Transmission Line	Underground Cable			300	Thousand USD	/	km	Solomon Power
66 kV Transmission Line	Overhead			600	Thousand USD	/	km	Solomon Power
Substation 12.5 MVA	In case of East Kola S/S			4,000	Thousand USD	/	lot	Solomon Power
11 kV Bay	Price by switchgear without an enclosure	200	-	300	Thousand USD	/	bay	Solomon Power
33 kV Bay	Price by switchgear without an enclosure	300	-	400	Thousand USD	/	bay	Solomon Power
Grid Transformer 33 kV / 11 kV 3.5 MVA				560	Thousand USD	/	set	TEPSCO

Source: JICA Project Team and SP

Table 5-18 Additional Transmission Cost for Plan A

PLAN A

in Thousand USD

Makira						
11 kV Transmission Line, ACSR/G2 Banana 6/1/3.75						
	East Honiara 11 kV Bus	-	Terminal 66	7	km	560
11 kV Cubicle						
	East Honiara			1	bay	300
Foxwood (Okea)						
11 kV Transmission Line, ACSR/G2 Banana 6/1/3.75						
	East Honiara 11 kV Bus	-	Terminal 229D	8.5	km	680
11 kV Cubicle						
	East Honiara			1	bay	300
33 kV Grid Transformer 3.5 MVA						
	East Honiara 33 kV / 11 kV 3.5 MVA transformer expansion			2	set	1,120
11 kV Cubicle						
	East Honiara			2	bay	600
33 kV Cubicle						
	East Honiara			2	bay	800
33 kV Transmission Line, Underground Cable 33 kV 3C 50 mm^2 Al XLPE						
	East Honiara 33 kV Bus	-	Lungga 33 kV Bus	4.06	km	1,218
33 kV Cubicle						
	East Honiara			1	bay	400
	Lungga			1	bay	400
					Total	**6,378**

Source: JICA Project Team

Table 5-19 Additional Transmission Cost for Plan B

PLAN B

in Thousand USD

Makira						
11 kV Transmission Line, ACSR/G2 Banana 6/1/3.75						
	Lungga 11 kV Bus	-	Terminal 63	5.29	km	423
11 kV Cubicle						

	Lungga	1	bay	300
Foxwood (Okea)				
11 kV Transmission Line, ACSR/G2 Banana 6/1/3.75				
	East Honiara 11 kV Bus - Terminal 229D	8.5	km	680
11 kV Cubicle				
	East Honiara	1	bay	300
33kV Grid Transformer 3.5MVA				
	East Honiara 33 kV / 11 kV 3.5 MVA transformer expansion	1	set	560
11 kV Cubicle				
	East Honiara	1	bay	300
33 kV Cubicle				
	East Honiara	1	bay	400
			Total	**2,963**

Source: JICA Project Team

(d) System voltage
By adjusting the terminal voltage of generators and the tap of substation transformers, the system voltage variation can be maintained within the standard (± 7%) both day and night. (Refer to Appendix 5-11A&B (Daytime) and Appendix 5-12A&B (Nighttime).

(2) Additional PV plan case

After the measures of Plan B, the power flow diagrams of the results of the examination of additional PV cases under the conditions described in Table 5-14 are shown in Appendix 5-13A&B (Daytime) and 5-14A& B (Nighttime). There is no overload equipment, and the voltage variation is within the standard value of ± 7%.

Table 5-20 shows the transmission cost for the case of additional PV plan.

Table 5-20 Additional Transmission Cost with Additional PV Plan

Additional transmission cost for a PV plant & BESS of 4 MW in White River Area

in Thousand USD

PV 4 MW (White River)						
11 kV Transmission Line, ACSR/G2 Banana 6/1/3.75				Assumption		
	PV terminal	-	White River 11 kV	5	km	400
11 kV Cubicle						
	White River			1	bay	300
BESS 4 MW (White River)						
11 kV Transmission Line, ACSR/G2 Banana 6/1/3.75				Assumption		
	BESS terminal	-	White River 11 kV	1	km	80
11 kV Cubicle						
	White River			1	bay	300
					Total	**1,080**

Source: JICA Project Team

For reference, Table 5-21 shows the transmission cost for BESS to control system frequency fluctuation in a short cycle.

Table 5-21 Additional Transmission Cost for BESS for System Frequency Control in a Short Cycle

Additional transmission cost for a BESS of 4 MW at Lungga S/S

in Thousand USD

BESS 4 MW (Lungga)						
33 kV Transmission Line, Underground Cable 33 kV 3C 50mm^2 Al XLPE				Assumption		
	BESS terminal	-	Lungga 33 kV Bus	1	km	300
33 kV Cubicle						
	Lungga			1	bay	400
					Total	**700**

Source: JICA Project Team

(3) Examination of weekend holidays, etc.

In general, the load is lighter on weekends and holidays than on weekdays, and transmission lines may be overloaded because PV is connected to the load system.

Therefore, it was confirmed that the transmission and substation facilities would not be overloaded, assuming that the peak daytime load would be 30% and 50% lighter on weekends and holidays.

As shown in Appendix A5-15A&B (daytime peak load 30% reduction) and Appendix A5-16A&B (daytime peak load 50% reduction), the power flow calculation results show that there is no overload and the voltage is within the standard range of ± 7%.

5-16 Proposal for introduction of the N-1 criterion in transmission system planning

As shown in Table 5-9, the N-0 criterion is applied to the SP transmission planning standard. In the future, it will be necessary to apply the N-1 criterion, which will not cause power outages or overload of remaining equipment even in the case of a single equipment accident. Here, it is described that it is proposed to introduce the N-1 criteria for the 66 kV and 33 kV systems, which are the main systems.

5-16-1 N-1 criterion

The proposed N-1 criterion are shown in Table 5-22.

Table 5-22 Proposed N-1 criterion in transmission system planning

1 Basic Concept

a Scope

The equipment to be examined under accident or stop conditions shall be equipment of 66 kV and 33 kV transmission systems.

b Basic Criterion

In the event of an accident or planned outage of a single facility in **1a,** plan the facility so that power outages, load limits, and overload of the remaining transmission system facilities will not occur.

2 Exceptions

a Overload of transmission system due to power generation outputs

If the overload due to the output of the generator can be eliminated by reducing the power output, no equipment measures will be taken.

b When allowing a temporary power outage

Even if a temporary power outage occurs in the 11 kV system in the event of an accident, no equipment measures will be taken if the 11 kV system can be swiftly switched and restored remotely.

c Bus bar accident

A bus bar accident of 11 kV or more at substations are regarded as a double accident (N - 2), and no equipment measures are taken.

3 Not applicable to exceptions

a Not applicable to 2b

The following buildings and facilities are not covered by 2b and temporary power outages are not allowed. Equipment measures should be taken.

Life-threatening facilities: large hospitals, etc.

Facilities related to safety: police, airports, etc.

Government facilities: Buildings and facilities of important government agencies

Source: JICA Project Team

5-16-2 Comparison of RERM and N-1 contingency study conditions

The N-1 contingency study conditions for this study are shown on the right side of Table 5-23. The left side is the RERM study conditions that have been examined so far. In the N-1 contingency study conditions, the study will be conducted under the conditions of the night time peak load in 2030 on the premise of Plan B mentioned above.

Table 5-23 Comparison of RERM and N-1 contingency study conditions

	RERM's Study	N-1 contingency condition Study
Purpose	Securing the transmission capacity of generated power from PV	Reinforcement of Honiara transmission system with security
Contingency Conditions	Normal condition (N-0 criterion) based on standard in SP	N-1 contingency condition proposed in this study
Decisive Load Conditions to the purpose	Day-time peak on weekday in 2030 (Total 20.3 MW, annual growth rate 2%)	Night-time peak on weekday in 2030* (Total 19.1 MW, annual growth rate 2%)
Generator Conditions	PV : maximum output Hydro : balanced output BESS : Charging operation	PV : zero Hydro : maximum output BESS : Discharging operation balanced
Transmission expansion plan for PV	Two cases of Plan A and B are examined	Plan B of RERM is the base case for study

*Note : Since the transmission system overload situation caused by PV generation can be solved by reducing the output of PV, no reinforcement measures are required on N-1 contingency condition.
Therefore, N-1 contingency study should be conducted under the peak load conditions in the night-time.

Source: JICA Project Team

5-16-3 **N-1 contingency study results**

The results of the study are shown in Table 5-24 and Table 5-25. Three cases that did not meet the N-1 criterion were found, and it became clear that countermeasures are necessary. The works proposed as countermeasures are named R1, R2, and R3.

Table 5-24 N-1 Contingency Study Results (transmission line contingency case)

Transmission Line Contingency Case																
File-name		Contingency Case						Capacity		Contingency			Results	Proposal Name
30NPL-	TLH	3377	Tenagai 66 kV	-	1208	Lungga 66 kV		59.9	MVA/cct	one of	2	circuits	No overload	
				-	3442	Tina Hydro 66 kV								
30NPL-	TW	3341	Tenagai 33 kV	-	3444	White River 33 kV		6.5	MVA/cct	one of	1	circuit	No overload	
30NPL-	WH	3444	White River 33 kV	-	1196	Honiara 33 kV		6.5	MVA/cct	one of	1	circuit	No overload	
30NPL-	HEK	1196	Honiara 33 kV	-	1192	East Kola 33 kV		20.8	MVA/cct	one of	1	circuit	No overload	
30NPL-	EKL	119	East Kola 33 kV	-	1206	Lungga 33 kV		20.8	MVA/cct	one of	1	circuit	Honiara - Ranadi 33kV TL 119% loading → Construction of additional 33 kV transmission line between Honiara and Ramadi is necessary.	**R1**
30NPL-	LR	1207	Lungga 33 kV	-	1264	Ranadi 33 kV		16.0	MVA/cct	one of	1	circuit	No overload	
30NPL-	RH	1264	Ranadi 33kV	-	1196	Honiara 33 kV		7.9	MVA/cct	one of	1	circuit	No overload	
30NPL-	LEH	1207	Lungga 33 kV	-	1190	East Honiara 33kV		6.5	MVA/cct	one of	1	circuit	Necessary to close the 11kV Terminal 212 and 213 after the fault event. No overload	

Source: JICA Project Team

Table 5-25 Contingency Study Results (transformer contingency case)

Transformer Contingency Case

File-name	Contingency Case			Contingency			Results	Proposal Name
30NPT- TN	3341	Tenagai	66 kV / 33kV 12.5MVA	one of	1	unit	No overload	
30NPT- TH	3442	Tina Hydro	66 kV / 11 kV 20MVA	one of	2	units	No overload	
30NPT- L6	1208	Lungga	66 kV/ 33 kV 20MVA	one of	2	units	White River - Honiara 33kV TL 105% loading → Construction of an additional 33 kV transmission line between White River and Honiara is necessary.	**R2**
30NPT- WR	3444	White River	33 kV / 11kV 3.5MVA	one of	1	unit	Necessary to close the 11kV Terminal 114 and 115 after the fault event. No overload	
30NPT- HN2	3163 or 3134	Honiara	33 kV / 11kV 12.5MVA	one of	2	units	Necessary to close the 11 kV bus coupling breaker after the fault event. No overload	
30NPT- RN	1264	Ranadi	33 kV / 11kV 12.5MVA	one of	2	units	Necessary to close the 11 kV bus coupling breaker after the fault event. No overload	
30NPT- EK2	1192	East Kola	33 kV / 11kV 12.5MVA	one of	1	unit	Necessary to close the 11kVRMU-CB3 after the fault event. But the 11kV section between T455 and Ranadi is loading at 116%. → Installation of one unit of transformer is necessary in East Kola.	**R3**
30NPT- L3	1207	Lungga	33 kV / 11kV 12.5MVA	one of	3	units	No overload	
30NPT- EH	1190	East Honiara	33 kV / 11kV 3.5MVA	one of	2	units	No overload	

one unit increased by Plan B

Source: JICA Project Team

5-16-4 **Countermeasure Proposal for N-1 Contingency**

(1) Proposal R1 of countermeasures for 33 kV East Kola --Lungga transmission contingency case

The loading rate of 33 kV East Kola --Lungga transmission line will be 119% due to 33 kV East Kola - Ranadi transmission line contingency.

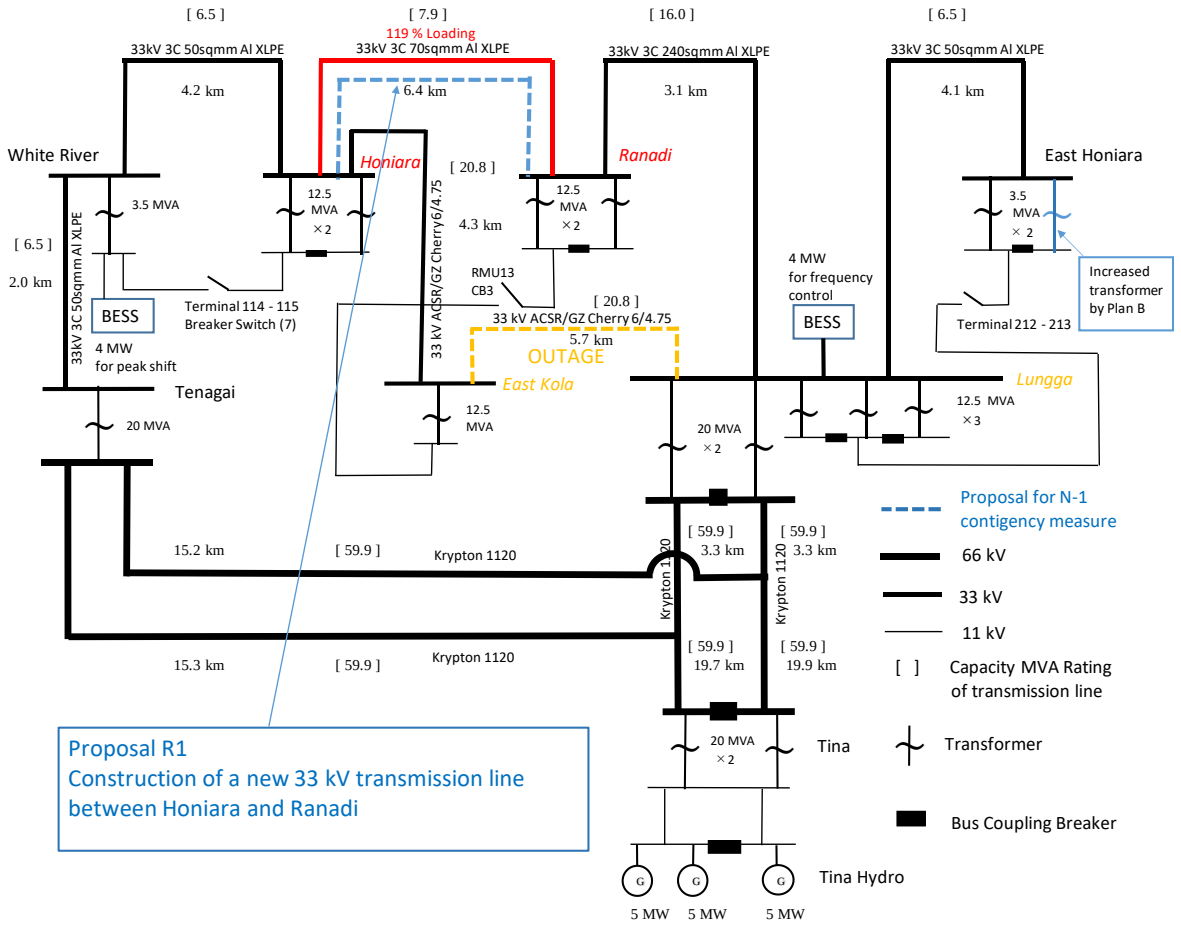

Source: JICA Project Team

Figure 5-39 Proposal R1 of countermeasures for 33 kV East Kola - Lungga transmission contingency case

(2) Proposal R2 of countermeasures for 66 kV Lungga transformer contingency case

The loading rate of 33 kV White River - Honiara transmission line will be 105% due to the 66 kV Lungga transformer contingency.

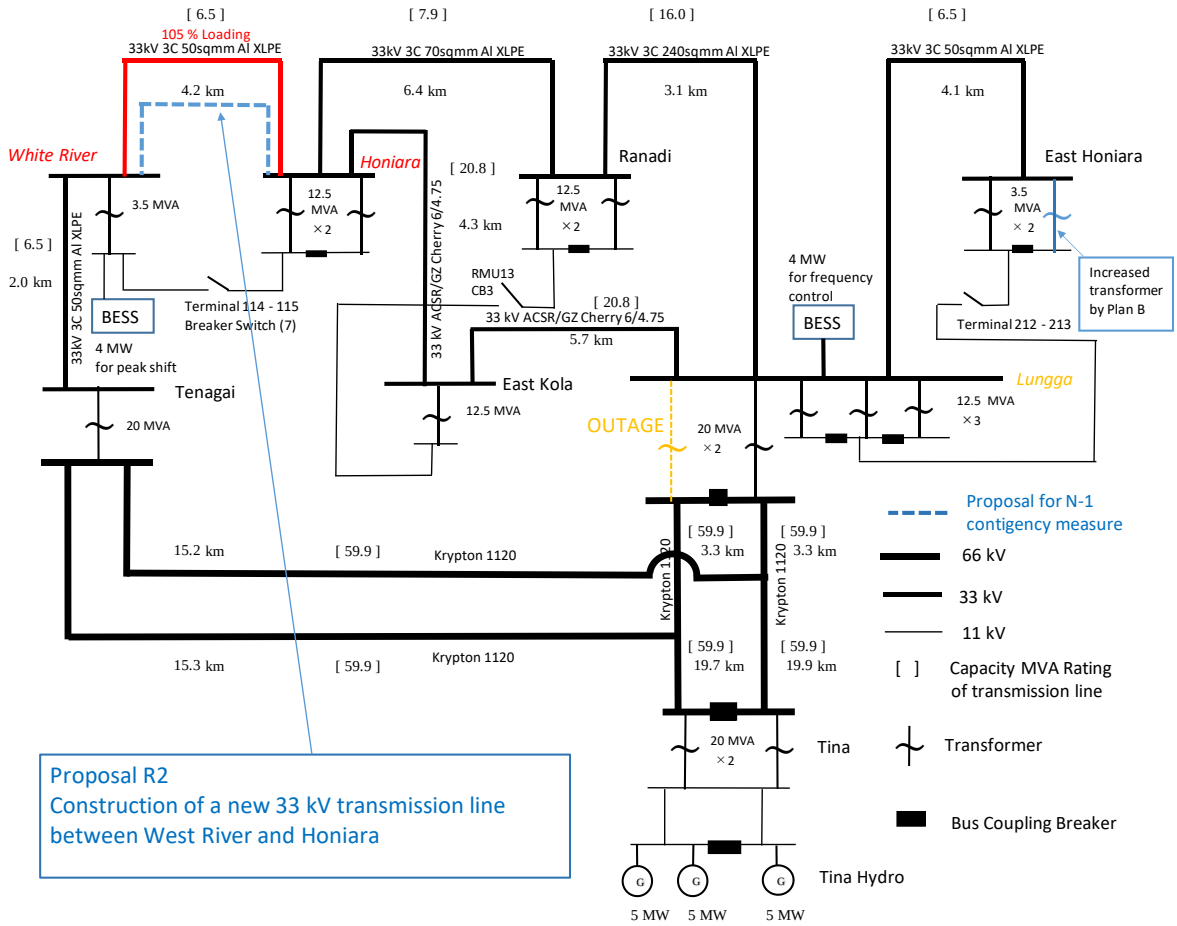

Source: JICA Project Team

Figure 5-40 Proposal R2 of countermeasures for 66 kV Lungga transformer contingency case

(3) Proposal R3 of countermeasures for 33 kV East Kola transformer contingency case

It is necessary to close the 11 kV RMU - CB3 after the fault event, however, the 11 kV section between T455 and Ranadi is loading at 116%. Therefore, the installation of one unit of transformer is necessary in East Kola substaion.

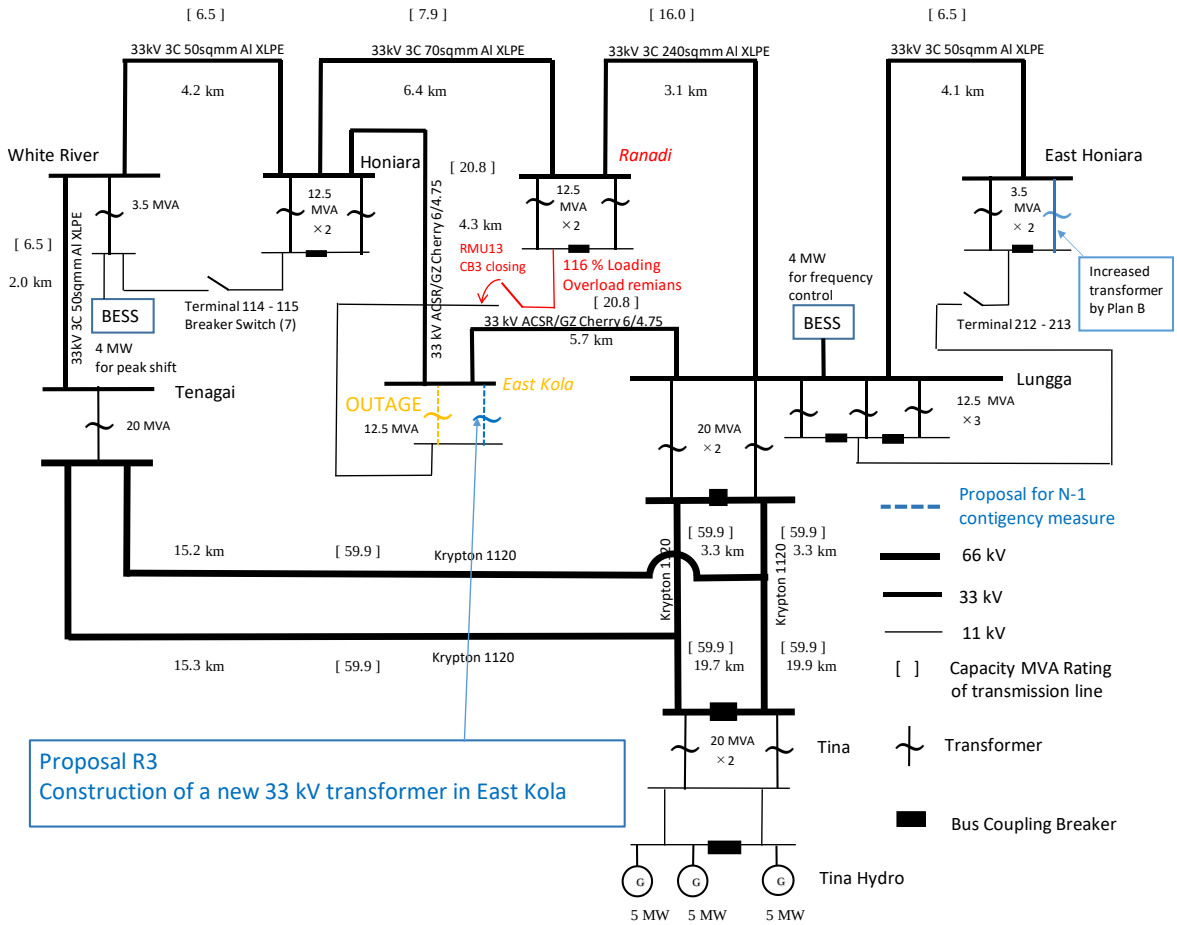

Source: JICA Project Team

Figure 5-41 Proposal R3 of countermeasures

for 33 kV East Kola transformer contingency case

(4) Construction cost for N-1 contingency measures

Table 5-26 shows the three proposed construction costs.

Table 5-26 Construction cost for N-1 contingency measures

Cost for N-1 contigency measure					
					in Thousand USD
Proposal R1					
33kV Transmission Line, Underground Cable 33kV 3C 70mm2 Al XLPE					
	Honiara 33kV Bus	- Ranadi 33kV Bus	6.4	km	1,920
33kV Cubicle					
	Honiara		1	bay	400
	Ranadi		1	bay	400
				Total	**2,720**

Cost for N-1 contigency measure					
					in Thousand USD
Proposal R2					
33kV Transmission Line, Underground Cable 33kV 3C 50mm2 Al XLPE					
	West River 33kV Bus	- Honiara 33kV Bus	4.2	km	1,260
33kV Cubicle					
	West River		1	bay	400
	Honiara		1	bay	400
				Total	**2,060**

Cost for N-1 contigency measure					
					in Thousand USD
Proposal R3					
33kV Grid Transformer 12.5MVA					
	East Kola 33kV/11kV 12.5MVA transformer expansion		1	set	750
11kV Cubicle					
	East Kola		1	bay	300
33kV Cubicle					
	East Kola		1	bay	400
				Total	**1,450**

Source: JICA Project Team

(5) Outline of N-1 contingency measures

Figure 5-42 shows the outline of the three proposed N-1 contingency countermeasures.

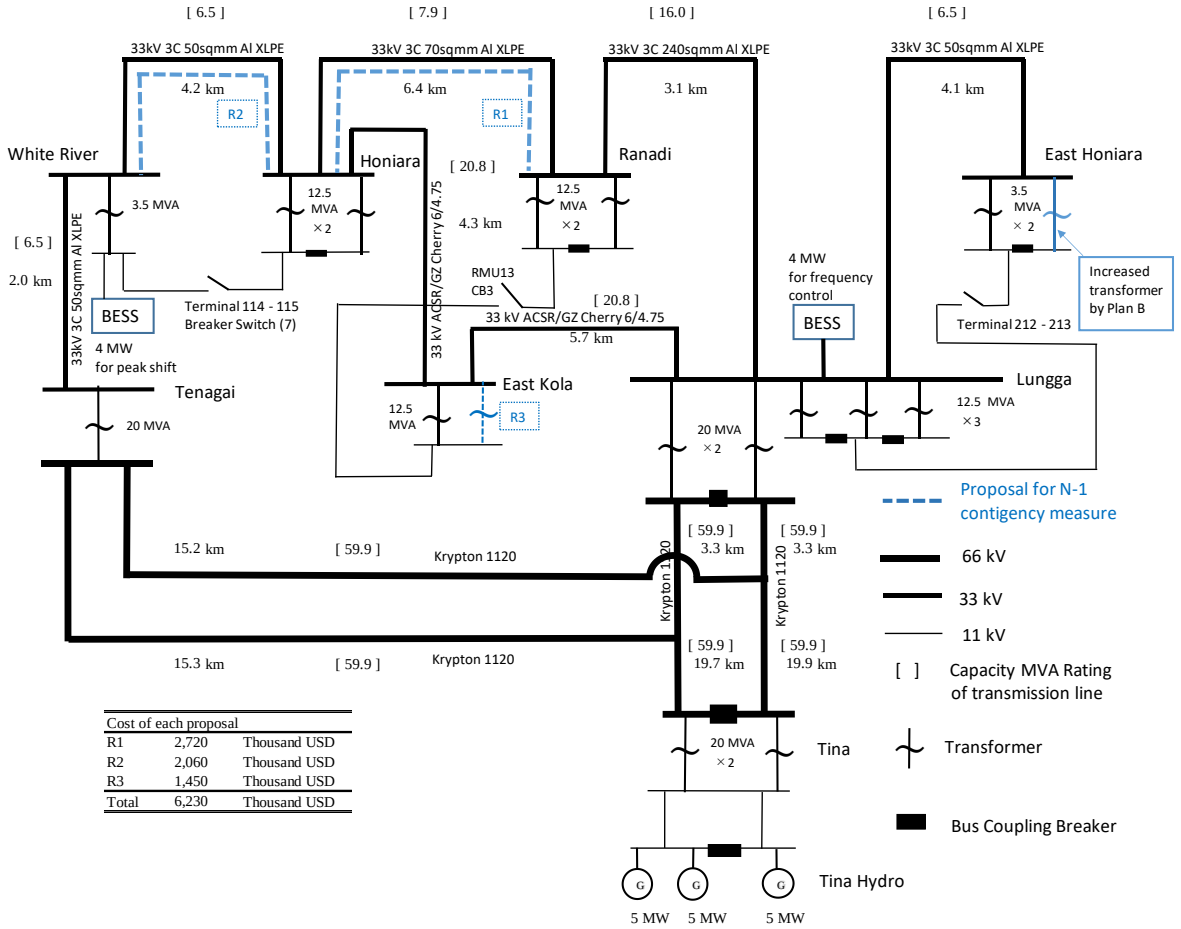

Cost of each proposal		
R1	2,720	Thousand USD
R2	2,060	Thousand USD
R3	1,450	Thousand USD
Total	6,230	Thousand USD

Source: JICA Project Team

Figure 5-42 Outline of N-1 contingency measures

5-17 Transmission System Losses

Regarding transmission and distribution power loss, as described in 2-1-3 (2), the technical loss in the Honiara system in 2018 was 11%.

According to the system calculation simulating 11 kV or more including the 11 kV / 0.4 kV transformer, the transmission loss is 750 kW at the peak in 2020, which is about 4% of the power at the transmission end of the power plant. The annual average will be less than about 2%. From this, it can be said that there is little room for reducing transmission loss in the high-voltage system, and even if the reduction measures are implemented, the effect is very small and it is not economically viable.

Therefore, the remaining 9% of transmission loss will be low voltage (415 V), but in reality, it is considered that non-technical loss (electricity theft) is still included in this 9%. As a matter of fact, the low voltage (415 V) technical loss is difficult to estimate by calculation, so it is difficult and unclear to distinguish between non-technical loss and technical loss. Table 5-27 below relates to the transmission losses in 2018 provided by SP, and the non-technical loss in February and May was 10%, but it was zero in March and June. This is due to the assumption that the technical loss is 11%. The actual technical loss should be smaller, and the low voltage (415 V) technical loss is not particularly large, so it is not at the level that it is urgently necessary to take measures to reduce the technical loss by expanding the low voltage equipment.

Here, the methodology for reducing technical loss in low-voltage (415 V) systems is described in 5-17-1 .In addition, as an example of the effect of reducing transmission loss at high voltage, we made a calculation with 5-17-2 for the proposal of 5.9, but as expected, the result was that there was no economic efficiency in terms of transmission loss reduction.

Table 5-27 Generation Statistics and Non-Technical Losses

Honiara	GENERATIONS STATISTICS & NON-TECHNICAL LOSSES							HONIARA Only					
ITEM	January	February	March	April	May	June	July	August	September	October	November	December	TOTAL
Generated	6,856,926	6,605,148	6,501,356	6,832,541	7,473,558	7,029,688	7,042,381	7,296,997	7,160,274	7,747,289	7,475,137	7,106,983	85,128,278
Loss Aux Used	110,261	196,240	258,205	248,165	229,378	270,562	269,697	321,899	273,544	263,483	244,544	294,421	2,980,399
Available	6,746,665	6,408,908	6,243,151	6,584,376	7,244,180	6,759,126	6,772,684	6,975,098	6,886,730	7,483,806	7,230,593	6,812,562	82,147,879
REVENUE													
Revenue	30,027,976	28,763,225	31,736,912	33,399,668	33,139,847	32,133,437	33,312,909.42	35,801,151	36,645,262	35,945,891	36,444,868	36,527,917	403,879,064
Weighted Average Tariff	$ 5.61	$ 5.73	$ 5.73	$ 5.78	$ 5.83	$ 5.34	$ 5.93	$ 6.50	$ 6.32	$ 6.16	$ 6.17	$ 6.35	$ 5.95
Rev per Kwh gen	$ 4.38	$ 4.35	$ 4.88	$ 4.89	$ 4.43	$ 4.57	$ 4.73	$ 4.91	$ 5.12	$ 4.64	$ 4.88	$ 5.14	$ 4.92
ELECTRICITY SOLD - KWH													
Post-Paid	4,033,723	3,828,357	4,133,382	4,499,544	4,211,481	4,523,823	4,357,991	4,079,730	4,480,162	4,387,561	4,520,951	4,329,607	51,386,312
Pre-paid [CP]	1,329,635	1,238,366	1,434,939	1,326,970	1,485,513	1,507,408	1,321,106	1,414,985	1,340,726	1,495,159	1,432,433	1,425,168	16,752,408
Total	5,363,358	5,066,723	5,568,321	5,826,514	5,696,994	6,031,231	5,679,097	5,494,715	5,820,888	5,882,720	5,953,384	5,754,775	68,138,720
Rev per Kwh Sold	$ 5.60	$ 5.68	$ 5.70	$ 5.73	$ 5.82	$ 5.33	$ 5.87	$ 6.52	$ 6.30	$ 6.11	$ 6.12	$ 6.35	$ 5.93
ELECTRICITY LOSSES													
Total Kwh Losses	1,383,307	1,342,185	674,830	757,862	1,547,186	727,895	1,093,587	1,480,383	1,065,842	1,601,086	1,277,209	1,057,786	14,009,159
Total Kwh Losses (%)	21%	21%	11%	12%	21%	11%	16%	21%	15%	21%	18%	16%	17%
Technical Losses (%)	11%	11%	11%	11%	11%	11%	11%	11%	11%	11%	11%	11%	11%
Non-Technical Losses (%)	10%	10%	0%	1%	10%	0%	5%	10%	4%	10%	7%	5%	6%
Non-Technical Kwh Losses	641,174	637,205	(11,977)	33,581	750,326	(15,609)	348,592	713,122	308,302	777,867	481,844	308,405	4,972,892
Revenue Lost (estimated)	$ 3,599,997	$ 3,653,552	-$ 68,225	$ 194,071	$ 4,376,051	-$ 83,332	$ 2,066,280	$ 4,636,279	$ 1,949,116	$ 4,793,077	$ 2,971,987	$ 1,956,829	$ 30,045,682

Source: SP

5-17-1 **Technical transmission power loss reduction for low voltage (415 V) system**

(1) Distribution power loss reduction method

The method for reducing the technical transmission loss (technical loss) of the low voltage (415 V) system is described here.
Generally, it is possible to reduce the transmission loss by shortening the length of the low voltage line.
An example shown in Figure 5-43 will be used for explanation.
This system supplies power from a transformer of 11 kV / 0.415 kV-200 kVA to a total load of 115 kW at peak times, and the conductor of the 415 V system uses ABC 95 mm^2. There are eight load points, and there are 20 A / phase (4.8 kW / phase) load points for every 100 m.
This is divided at exactly half the point, and power is supplied from the newly installed 100 kVA transformer to the fifth and subsequent load points.
The transmission loss before the construction change (Loss B) is 10.65 kW, and the transmission loss after the construction change (Loss A) is 3.55 kW. This construction can be expected to reduce the transmission loss by 7.1 kW at the peak, and the reduction rate is 67%.
Transformers and electric wires are actually used in the Honiara system.

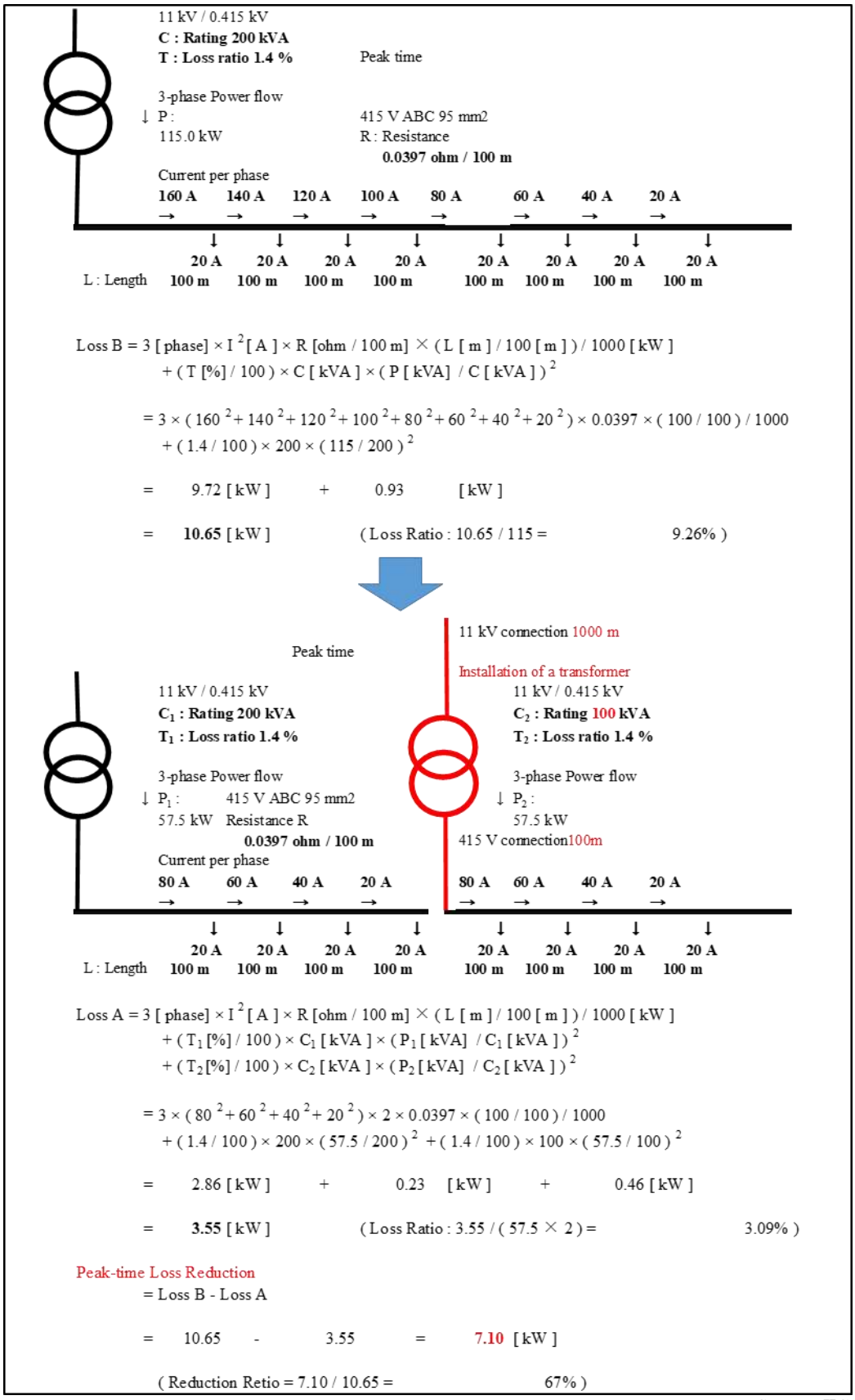

Source: JICA Project Team

Figure 5-43 Example of Low voltage (415 V) transmission loss reduction measures

(2) Setting of economic evaluation index

An index is needed to determine how much the countermeasure construction cost can be spent on the reduction effect obtained in formulating the reduction measures.
Specifically, we assume construction to reduce the transmission loss of 1 kW during peak time, and set the benefits that can be obtained by the construction until the end of the equipment life in the future. If the kW unit price obtained by dividing the construction cost by the amount of reduction in transmission loss at the peak is less than the economic index set as benefit, it is an economical reduction measure, and if it is larger than the benefit, it is an uneconomical reduction measure.
Based on the information obtained from the SP, the benefits that serve as economic indicators were set as follows in Table 5-28. As a result, the construction cost to reduce the power loss of 1 kW at the peak should be less than 132,322 SBD from the viewpoint of economic rationality.

Table 5-28 Economic Index (Benefit)

LT	Life time of lines and transformers	20	years	2018 SP Annual Report page 50: 20 - 60 years
D_R	Discount rate	10	%	Same as 4.5.3
C_G	Generation cost per kWh	4.7	SBD	Refer to Table 6-4
LP	Loss reduction at peak time (Assumption)	1	kW	
F	Conversion factor from peak time loss to annual average loss (Assumption)	0.3		
L_1	Annual loss reduction at commissioning year (LP × F × 8760 hours)	2,628	kWh / year	
G_r	Demand growth rate	2	%	
L_n	Annual loss reduction at n-th year	$= L_1 \times (1 + D_R)^{n-1}$	kWh / year	
B_1	Benefit at n-th year	$= L_n \times C_G$	SBD	
PB_n	Benefit at n-th year at present value	$= B_n / (1 + D_R)^{n-1}$	SBD	

	L_n Annual Loss Reduction kWh / year	B_n Benefit SBD	PB_n Benefit at present value SBD
1 st year	2,628	12,352	12,352
2 nd year	2,681	12,599	11,453
3 rd year	2,734	12,851	10,620
4 th year	2,789	13,108	9,848
5 th year	2,845	13,370	9,132
6 th year	2,902	13,637	8,468
7 th year	2,960	13,910	7,852
8 th year	3,019	14,188	7,281
9 th year	3,079	14,472	6,751
10 th year	3,141	14,761	6,260
11 th year	3,204	15,057	5,805
12 th year	3,268	15,358	5,383
13 th year	3,333	15,665	4,991
14 th year	3,400	15,978	4,628
15 th year	3,468	16,298	4,292
16 th year	3,537	16,624	3,980
17 th year	3,608	16,956	3,690
18 th year	3,680	17,295	3,422
19 th year	3,753	17,641	3,173
20 th year	3,828	17,994	2,942
Total	63,853	300,111	132,322

Source: JICA Project Team

(3) Economic evaluation

The total construction cost in Figure 5-43 is 730,000 SBD, and the construction cost per reduced kW is 102,817 SBD. Since this is smaller than the economic index (benefit) 132,322 SBD, it is a loss reduction measure that satisfies economic rationality.
The unit cost of construction used for the calculation was provided by SP.

Cost (transformer) = 1000 [SBD / kVA] × 100 [kVA]
= 100,000 [SBD]

Cost (11 kV connection) = 600,000 [SBD / km] × 1000 [m] / 1000 [m]
= 600,000 [SBD]

Cost (415 V connection) = 30,000 [SBD / 100 m] × 100 [m]
= 30,000 [SBD]

Cost total = 100,000 + 60,000 + 30,000
= **730,000** [SBD]

Cost per kW = Cost total / Peak-time Loss Reduction
= 730,000 [SBD] / 7.10 [kW]
= **102,817** [SBD / kW]

< **132,322** [SBD / kW]

5-17-2 Technical transmission power loss reduction for high voltage (11 kV or higher)

In general, locations or equipment that do not meet the N-1 standard are considered to have relatively large transmission losses, so the loss reduction effect was calculated for the proposal of 5.9 from the perspective of transmission loss reduction effects.
As shown in Table 5-29, none of the results of each proposals meet the economic indicators (benefits) from the point of view as a plan aimed at reducing transmission losses.

Table 5-29 Economic evaluation of N-1 contingency proposal from the viewpoint of loss reduction

1 USD = 8.02 SBD

Proposal Name based on N-1 criteria	R1		R2		R3	
	Honiara - Ranadi 33 kV TL LOSS		West River - Honiata 33 kV TL LOSS		East Kola TR LOSS	
Loss before	55	kW	55	kW	19	kW
Loss after	46	kW	32	kW	10	kW
Loss Reduction	9	kW	23	kW	9	kW
Cost in USD	2,720	Thousand USD	2,060	Thousand USD	1,450	Thousand USD
Cost in SBD	21,814	Thousand SBD	16,521	Thousand SBD	11,629	Thousand SBD
Evaluation	2,423,778	SBD / kW > 132,322	718,304	SBD / kW > 132,322	1,292,111	SBD / kW > 132,322

TL : Transmission Lines TR : Transformers

Source: JICA Project Team

Chapter 6 Financial Analysis

6-1 Conditions for Economic and Financial Analysis

Conditions for economic and financial analysis are listed in Table 6-1. The financial condition and forecast were analyzed and estimated with the latest publicized data on the annual report of SP 2019 and SP's provision. Moreover, the latest project information which is funded by other development partners could be considered in the analysis.

Table 6-1 List of Conditions for Economic and Financial Analysis

Item	Details
Long term business plan toward 2030	At this moment, the plan by 2024 is available and timing for the next plan to be clarified
Income Tax rate for SP	As SP is one of the SOEs, Income Tax doesn't require according to the specific Act to SOEs
Hurdle Rate	Around 11-12% for the return on equity basis
Tax relating to Land Acquisition	10% is required for Stamp Tax
Interest rate for SP	Less than the market value of 8-10% could be expected because of SP's good management status

Source: prepared by JICA Project Team based on provided information by SP

6-2 Study on Impact of Other Players- International Organizations, IPPs and Self-generation

6-2-1 Financial Condition of Solomon Power

Financial analysis for SP was conducted to assess impacts on an increase of capital injection by development donors, private sector participation, and self-generating consumers. SP's audited financial statements from 2010 to 2019 were analyzed. Due to the replacement of the financial management system, some displayed subjects and aggregate method were different before 2012 and after 2013. In Table 6-6 below, only the details after 2014, when the details were changed, are described.

Table 6-2 Profit and Loss Statement

P/L						
(SBD)	2014	2015	2016	2017	2018	2019
Operating income						
Electricity sales	446,557,219	439,887,311	437,528,391	428,039,827	457,156,336	480,466,462
Amortisation of deferred income	3,033,478	4,425,527	6,436,883	10,393,400	6,395,050	7,715,936
reversal of credit impairment						2,743,565
Other operating income	14,364,520	2,819,563	6,437,901	2,545,325	5,486,818	8,933,899
Total operating income	463,955,217	447,132,402	450,403,175	440,978,551	469,038,204	499,859,862
Expenses						
Generation and distribution	254,231,805	205,913,348	187,348,883	207,601,960	224,175,081	225,341,290
Bought in electricity	3,228,334	6,160,216	5,557,395	3,561,954	0	0
Fuel	207,156,539	149,930,357	129,691,478	137,645,095	180,667,381	177,077,975
Lubricating oil	2,234,023	4,876,902	3,748,438	4,590,875	3,888,180	3,255,571
Personnel	17,043,229	18,922,237	25,293,211	25,407,717	23,828,353	26,212,457
Repairs and maintenance	24,087,995	23,975,911	21,066,362	31,935,454	11,780,667	15,975,286
Distribution lines						
Repairs and maintenance and lubricants						
Other	481,684	2,047,725	1,992,000	4,460,864	4,010,500	2,820,000
Administration	52,136,862	65,350,110	61,343,934	59,683,883	81,605,507	68,582,240
Advertising	1,655,021	1,634,351	2,100,749	2,430,499	1,682,314	1,440,630
Computer bureau charges	615,061	1,287,256	1,744,076	1,865,089	1,659,243	1,785,710
Consultancy fees	10,691,865	13,646,402	13,301,915	18,089,604	11,273,094	4,376,917
Electricity	3,209,709	1,782,474	3,816,113	2,949,745	2,969,773	2,969,773
Electricity rebate	1,508,690	1,076,404	1,001,382	4,632,483	5,080,129	4,952,714
Insurance	1,977,764	1,529,051	1,596,240	2,338,014	2,558,392	2,504,500
Personnel	15,374,658	20,680,535	19,153,639	10,202,013	39,187,093	32,772,778
Printing and stationery	2,392,728	2,715,237	2,410,953	2,146,769	1,829,337	2,218,161
Professional fees	709,599	892,004	1,743,848	1,080,046	1,504,846	2,569,010
Property expenses	4,343,245	6,488,127	4,017,097	4,628,537	4,895,004	3,821,232
Telecommunications	2,541,188	5,232,115	4,478,374	3,372,687	3,631,425	3,387,565
Travel and accommodation	6,017,438	4,690,621	4,034,508	4,796,083	4,120,552	3,527,978
Other	1,099,896	3,695,533	1,945,040	1,152,314	1,214,305	2,255,272
Operating	24,009,296	31,836,151	30,807,434	31,148,030	22,830,031	23,761,916
Customs handling charges	4,092,246	5,259,541	3,392,858	5,945,648	4,948,308	4,083,563
Personnel	9,958,265	16,887,379	17,953,848	17,866,359	12,030,377	11,861,047
Repairs and maintenance	5,265,999	5,298,689	5,650,408	3,882,631	1,909,207	3,580,032
Vehicle costs	3,769,845	3,492,996	3,810,321	3,453,391	3,942,139	4,237,273
Other	922,941	897,544	0	0	0	0
Depreciation and amortisation	35,856,247	40,549,658	46,006,826	53,679,089	56,672,749	64,259,234
depitiation of right-of-use assets						3,664,350
Bad debts written off	0	0	0	0	0	0
Allowance for uncollectability	4,604,834	-3,997,994	-861,604	11,396,373	3,714,358	0
Interest expense	1,096,621	1,850,967	1,134,219	389,387	30,434	2,505,667
Inventory & asset write-off	-10,169	0	0	-145,261	92,140	18,773,115
Revaluation decrement - property	0	0	158,334	0	0	
Other						
Total expenses	371,925,496	341,502,239	325,938,025	363,753,461	389,120,299	406,887,811
Gain from operations	92,029,720	105,630,162	124,465,150	77,225,091	79,917,905	92,972,051
Foreign exchange gain/ (loss)	-614,452	1,057,134	-4,416,280	423,591	162,160	-281,559
Net profit for the year	91,415,268	106,687,296	120,048,870	77,648,682	80,080,065	92,690,491
Other comprehensive income						
Revaluation increment - property			85,414,971			
Prior period adjustment						
Total comprehensive income for the year	91,415,268	106,687,296	205,463,841	77,648,682	80,080,065	92,690,491

Source: JICA Project Team

Table 6-3 Key Management Indicators

[Unit: %]

	2010	2011	2012	2013	2014	2015	2016	2017	2018	2019	2010-2019 Rate of increase
Gross profit margin	22.2	31.0	37.2	37.8	45.2	53.9	58.4	52.9	52.2	54.9	-
Operating profit margin	(26.7)	14.0	17.3	10.1	19.8	23.6	27.6	17.5	17.0	18.6	-
Ordinary profit margin of sales	(26.6)	14.0	17.1	11.0	19.7	23.9	26.7	17.6	17.1	18.5	-
Increase in sales	-	135.8	113.1	101.7	110.5	98.5	99.5	97.8	106.8	105.1	185.6

Source: JICA Project Team

Table 6-4 Electricity Generation and Unit Price

[Unit: %]

	2010	2011	2012	2013	2014	2015	2016	2017	2018	2010-2018 Increase rate
Amount of electricity generated (GWh)	83.6	83.8	84.0	81.1	85.4	86.8	90.6	94.2	96.2	115.2
Generation cost (SBD/kWh)	3.1	4.2	4.7	5.0	5.2	5.1	4.8	4.5	4.7	153.3

Source: JICA Project Team

Table 6-5 Percentage of Generation Costs and Fuel Costs

[Unit: %]

	2010	2011	2012	2013	2014	2015	2016	2017	2018	2019
Generation and transmission costs / Operating expenses	61.4	80.2	75.9	69.1	68.4	57.5	57.1	52.9	57.6	55.4
Fuel and lubricant costs / Generation and transmission costs	85.3	87.0	80.1	77.6	82.4	71.2	68.5	17.5	82.3	80.0
Fuel and lubricant costs/Sales income	67.4	64.8	53.5	50.4	46.9	30.5	33.2	17.6	40.4	37.5

Source: JICA Project Team

While both operating income margin and ordinary income margin were in deficit in 2010, the review of electricity charges has led to a surplus of both operating income and ordinary income since 2011. Between 2010 and 2019, the unit price of electricity rose by 1.5 times, and sales rose by 1.8 times. With respect to expenses, electricity generation and transmission costs account for the largest percentage of operating expenses, fuel and lubricant costs account for the majority of the cost. Fuel and lubricant costs accounted for 67.4% of electricity sales in 2010 but decreased to 37.5% in 2019. Since turning in surplus in 2011, both sales and profits have been stable, and the company has secured a high rate of around 20% in profit margin.

Table 6-6 Balance Sheet

B/S						
(SBD)	2014	2015	2016	2017	2018	2019
Assets						
cash and cash equivalnet	75,411,436	150,836,397	201,187,479	221,808,007	303,524,441	310,620,237
held to maturity investment	99,128,807	67,440,738	92,847,409	45,542,195	0	0
inventories	8,855,512	10,946,653	15,458,291	20,910,019	22,451,241	51,531,308
receivables	70,025,232	48,534,905	50,846,761	50,142,206	61,766,690	61,305,594
prepayment	1,099,119	1,291,835	1,066,037	3,042,350	13,755,419	7,305,488
current Assets	254,520,106	279,050,528	361,405,977	341,444,777	401,497,791	430,762,626
property, plant and equipment	460,274,583	550,989,546	714,037,972	795,429,205	859,782,324	968,691,156
right-of-use assets						7,984,758
receivables	5,962,260	4,710,577	3,234,185	1,660,609	798,672	0
Government bonds					30,000,000	30,000,000
non-current asets	466,236,843	555,700,123	717,272,157	797,089,814	890,580,996	1,006,675,914
Total assets	720,756,949	834,750,651	1,078,678,134	1,138,534,591	1,292,078,787	1,437,438,540
Liability						
deferred income	2,787,234	3,143,547	6,392,961	6,392,961	6,392,961	7,715,936
trade and other payables	24,656,762	32,049,557	46,136,620	32,007,084	40,844,195	35,379,621
lease liability						2,036,765
Solomon Islands Borrowings				2,924,999	3,599,000	3,599,000
employee benefits	835,272	966,806	391,109	193,818	6,778,721	4,244,522
Current liabilities	28,279,268	36,159,910	52,920,690	41,518,862	57,614,877	52,975,844
defered income	29,893,931	29,319,696	55,422,959	50,801,158	74,065,116	122,181,545
trade and other payables						
liase liabilities						2,191,164
Solomon Islands Borrowings					10,928,257	19,495,564
employee benefits					10,401,161	12,834,555
non-current liabilities	29,893,931	29,319,696	55,422,959	50,801,158	95,394,534	156,702,828
Total liabilities	58,173,199	65,479,606	108,343,649	92,320,020	153,009,411	209,678,672
Equity						
cointribute equity	246,933,170	246,933,170	246,933,170	246,933,170	246,933,170	246,933,170
asset revaluation reserve	299,474,732	299,474,732	384,889,703	384,889,703	384,889,703	376,621,369
accumulated profit	116,175,846	222,863,143	338,511,612	414,391,698	507,246,503	604,205,329
equity	662,583,748	769,271,045	970,334,485	1,046,214,571	1,139,069,376	1,227,759,868
Total equity and liabilities	720,756,947	834,750,651	1,078,678,134	1,138,534,591	1,292,078,787	1,437,438,540

Source: JICA Project Team

Table 6-7 Key Management Indicators

[Unit: %]

	2010	2011	2012	2013	2014	2015	2016	2017	2018	2019
Capital adequacy ratio (Equity/Total Assets)	64.4	90.0	89.3	91.5	91.9	92.2	90.0	91.9	88.2	85.4
Equity ratio (excluding asset valuation gains and losses) (Equity (excluding valuation of assets) / Total assets)	39.8	35.6	43.4	43.4	50.4	56.3	54.3	58.1	58.4	59.2
Flow ratio (Current assets/current liabilities)	207.1	915.7	666.9	785.4	900.0	771.7	682.9	822.4	696.9	813.1
Ratio of loans and subsidies (Borrowings, Subsidies/ Total Assets)	14.4	7.4	5.6	5.1	4.5	3.9	5.7	5.3	7.4	10.6
Fixed ratio (Fixed assets/equity)	31.3	8.4	5.8	4.5	4.5	3.8	5.7	4.9	8.4	12.8

Source: JICA Project Team

Retained earnings turned into positive after 2013 whereas they were negative until 2012. With a high-profit margin, SP has accumulated equity capital and improved a capital adequacy ratio to 85.4% in 2019. Moreover, a capital adequacy ratio that excludes fixed asset valuation gains and losses is 59.2%.

The balance of cash deposit in 2018 exceeded 300 million SBD and the current asset ratio was 813.1%, meaning high financial soundness and investment capacity at the moment. SP is running their business with less borrowing and subsidies, whose ratio is 10.6% in 2019. This means SP is operating debt-free management because current deposit balances are more than outstanding loans. Borrowings are from development partners such as WB and ADB. The surge in provision for retirement benefits in 2018 is due to a review of retirement benefits levels. The company cut its retirement allowance in the event of poor performance but raised it again in November 2018 due to financial improvements. In this way, since the review of electricity tariff in 2011, we have acquired financial strength through steady management improvements, so at this time, there is no particular concern about the financial content.

6-2-2 Effects of Development Partners, IPP Funds Introduction and Increase in Home System

(1) IPP and the effects of increased home consumption

SP might lose potential demand in the future due to an increase of IPP and self-consumption with the home system. SP, however, has a high-profit margin and financial strength, which is less likely to result in a significant deterioration in the amount of money caused by an increase in costs or a decrease in sales due to the entry of IPP by PPA or an increase in the home system. Therefore, the impact of IPP's entry and increase in home power generation is not taken into account at this moment. Besides, SP expresses their interests to invest in IPP as one of the investors. SP centered IPP project would attract foreign investors and subsequently, it can promote IPP in the market.

(2) Funding record from development partners

In terms of borrowings and subsidies, SP obtains funding from development partners such as WB and ADB. The total amount of borrowings and subsidies is SBD 400 million in which SBD 270 million is for grant and SBD 130 million for a concessional loan. Further support from development and aid agencies is also expected in the plan. (Details are described in "6-3 Financial Viability of SP")

Table 6-8 Financing Results

Donor			Project name	Start Date	Amount (SBD)
Grant					
	World Bank		Solomon Islands Sustainable Energy Project	2009/6/25	32,000,000
	World Bank		Solomon Islands Sustainable Energy Project	2014/6/23	16,000,000
	World Bank		Electricity Access Expansion Project (OBA)	2016/11/2	17,800,000
	ADB		Solar Power Development Project	2017/1/19	67,520,000
	NZAID (MFAT)		Solomon Islands Renewable Energy: Hybrid electricity system construction and new connections	2018/6/1	35,591,796
	World Bank		Solomon Islands Access and Renewable Energy Expansion Project	2018/10/23	107,600,000
Loan					
	World Bank		Solomon Islands Sustainable Energy Project	2014/6/23	88,000,000
	World Bank		Solomon Islands Access and Renewable Energy Expansion Project	2018/10/23	44,400,000
Total					408,911,796

Source: JICA Project Team Creation

6-3 Financial Viability of SP

6-3-1 Future Planning based on Power Development Plan

The following are the prerequisites for future planning calculations by 2030.

(1) Retail tariff

The current tariff level of 65USc/kWh (=5.2SBD/kWh) is applied for projection of P/L and C/F. The same level of tariff was proposed in the review work, carried out by MMERE and SP and funded by WB (5.23 SBD/kWh = 1.92 <fuel cost> + 3.31 <average non-fuel cost>).

(2) Electricity demand

Assuming 2%.

(3) Fuel and lubricating oil costs

It is a figure based on the plan prepared by SP until 2025[18]. Beyond 2026, the forecast was calculated with the base case and the power supply capacity in the future.

(4) Operating maintenance costs

The cost of maintaining diesel (overhaul) was based on SP's plan. The cost of maintaining solar power was calculated at 423.24 SBD/kW per year.

(5) Inflation rate

Other operating expense for 2019 and 2020 were provided by SP[19]. From 2021 onwards, SP-created plans showed an annual increase of 1.1%, However, based on hearings with the SP, the consumer price index of the Solomon Islands, and the World Bank's inflation estimate, the annual increase was set at 3.2%.

Table 6-9 Financing results

	2017	2018	2019e	2020f	2021f	2022f
Real GDP Growth	5.3	3.9	1.2	-4.8	3.2	3.5
Inflation rate (CPI)	2.1	3.9	2.8	3.0	4.1	3.4
Balance of Payment (% of GDP)	-4.3	-3.0	-8.9	-14.3	-13.6	-12.2
Fiscal Balance (% of GDP)	-4.6	0.7	-1.7	-6.2	-3.7	-2.5
External Debt (% of GDP)	7.6	7.1	7.6	10.1	13.2	15.9

Source: WB and IMF

(6) Depreciation

It is a figure based on the plan prepared by SP until 2025[20]. Since depreciation expenses are expense-free expenses and do not affect cash flow, the company posted the same amount as the 2025 figure for convenience after 2026.

(7) Taxes on land acquisition

10% of land acquisition expenses will be recorded.

(8) Funding Plan

AIFEP loan Schedule was referred.

(9) Dividend Plan

Two patterns of dividend plan were considered depending on the income level of every single year. The figures were obtained through hearing from SP.

- Net income level: less than or equal 100,000,000 SBD : 5%
- Net income level: more than 100,000,000 SBD : 10%

The plans calculated based on the above are shown below.

[18] SIEA : 2020 Statement of Corporate Objectives
[19] SIEA: 2020 Statement of Corporate Objectives
[20] Ditto

Sales were calculated from the energy mix with the base scenario examined in Chapter 5. As a result, the company will secure a high-profit margin by 2023. Although the net income rate will deteriorate once in 2024, profit margins are expected to grow more from 2025 onwards. The decrease in the cost of power generation is the main factor. A large-scale Tina Hydropower will be in operation in August 2024, and although the cost of purchasing electricity from Tina will be incurred in the future, a significant reduction in fuel cost is expected due to reducing DG. Power supply from DG will be significantly reduced to 9.4 GWh in 2025 after the commencement of operation while it will supply 62.5 GWh, specifically in 2024 before Tina will start the operation. In the long term, the solar PV capacity in the energy mix will increase and the proportion of it in the energy mix will also increase. This is expected to lower overall power generation cost.

Capital investments are planned for the 11 years from 2020 to 2030 in hybrid systems (PV + batteries (+ DG)), grid-related (transmission and substation), large-scale PV installations and DG overhauls. Besides, new borrowing/grant will be limited to 180 million SBD in 2020 against a total of 2.1 billion SBD expenditures. The breakdown of 180 million SBD includes 97 million SBD grants and 85 million SBD from DFAT. The balance for the capital expenditures will be allocated from the cash deposit.

Table 6-10 Electricity sales (transmission and distribution loss are included)

	2020	2021	2022	2023	2024	2025	2026	2027	2028	2029	2030
Purchased power（GWh）											
Diesel	83.4	85.2	87.0	88.9	90.7	36.1	19.6	18.5	16.2	14.0	11.9
Tina River Hydropower	0.0	0.0	0.0	0.0	0.0	78.0	78.0	78.0	78.0	78.0	78.0
Solar	5.1	5.1	5.1	5.1	5.1	6.7	25.5	33.4	36.5	39.6	39.6
Independent Power Producer (IPP)	0.0	0.0	0.0	0.0	0.0	0.0	0.0	0.0	0.0	0.0	0.0
Total	88.5	90.3	92.1	94.0	95.8	120.8	123.1	129.9	130.7	131.6	129.5
Share											
Diesel	94.2%	94.4%	94.5%	94.6%	94.7%	29.9%	15.9%	14.2%	12.4%	10.6%	9.2%
Tina River Hydropower	0.0%	0.0%	0.0%	0.0%	0.0%	64.6%	63.4%	60.0%	59.7%	59.3%	60.2%
Solar	5.8%	5.6%	5.5%	5.4%	5.3%	5.5%	20.7%	25.7%	27.9%	30.1%	30.6%
Total	100%	100%	100%	100%	100%	100%	100%	100%	100%	100%	100%

Source: JICA Project Team

Table 6-11 Borrowing Statement

（SBD）	2020	2021	2022	2023	2024	2025	2026	2027	2028	2029	2030
World Bank（SIEAREEP loan）											
Balance at 1 January	43,697,550	43,697,550	41,269,908	38,842,267	36,414,625	33,986,983	31,559,342	29,131,700	26,704,058	24,276,417	21,848,775
Principal Repayments	0	-2,427,642	-2,427,642	-2,427,642	-2,427,642	-2,427,642	-2,427,642	-2,427,642	-2,427,642	-2,427,642	-2,427,642
Balance at 31 December	43,697,550	41,269,908	38,842,267	36,414,625	33,986,983	31,559,342	29,131,700	26,704,058	24,276,417	21,848,775	19,421,133
Interest expense	0	-397,418	-595,363	-645,806	-832,048	-829,775	-829,775	-829,775	-832,048	-829,775	-829,775
World Bank（SISEP）											
Balance at 1 January	37,789,504	34,190,504	30,591,503	26,992,503	23,393,503	19,794,502	16,195,502	12,596,501	8,997,501	5,398,501	3,599,000
Principal Repayments	-3,599,000	-3,599,000	-3,599,000	-3,599,000	-3,599,000	-3,599,000	-3,599,000	-3,599,000	-3,599,000	-1,799,500	0
Balance at 31 December	34,190,504	30,591,503	26,992,503	23,393,503	19,794,502	16,195,502	12,596,501	8,997,501	5,398,501	3,599,000	3,599,000
Interest expense	-1,940,538	-1,919,446	-1,919,446	-1,924,719	-1,929,992	-1,924,719	-1,935,265	-1,919,446	-1,924,719	-959,723	0
AUSAID（AIFFP loan）											
Balance at 1 January	0	84,800,000	84,800,000	84,800,000	84,800,000	80,560,000	76,320,000	72,080,000	67,840,000	63,600,000	59,360,000
Borrowings	84,800,000	0	0	0	0	0	0	0	0	0	0
Principal Repayments	0	0	0	0	-4,240,000	-4,240,000	-4,240,000	-4,240,000	-4,240,000	-4,240,000	-4,240,000
Balance at 31 December	84,800,000	84,800,000	84,800,000	84,800,000	80,560,000	76,320,000	72,080,000	67,840,000	63,600,000	59,360,000	55,120,000
Interest expense	0	0	0	0	-3,588,344	-1,924,730	-1,949,026	-1,949,026	-1,954,366	-1,949,026	-1,949,026

※Borrowings from SIEAREEP (September 2018) with grace period of no repayments or interest for the first two years.

Source: JICA Project Team

6-3-2 Review Financial Feasibility

The investment plan and the balance of the current deposit based on the procurement policy of the previous section are shown below. SP will cover the majority of the total investment with cash deposits on hand. It is possible to cover with the abundant cash deposits due to conventional accumulation.

Besides, cash deposits will reach a high level of more than 1 billion SBD in 2030, and the financial feasibility of calculations based on current preconditions is extremely high. However, a significant, albeit primary, deterioration in cash deposits on hand in 2024 is a financial risk. It is also an option to consider temporarily borrowing additional loans to deal with the financial risk. Therefore, according to the number of years of debt redemption, each year is less than one year, since the debt redemption years are short, it is recommended to consider additional borrowings.

There is also room to consider the introduction of IPP as a way to reduce initial capital investment costs. However, it is necessary to pay attention to the possibility that the generation cost increases by IPP introduction. SP also intends to invest in IPP, so in addition to the impact of the decrease in initial capital investment costs and the increase in power generation costs, it will be necessary to consider in the future, including the financial impact of the increase in initial investment costs and the increase in dividend income.

6-3-3 Impact of IPP participation

The impact of IPP participation on SP's financials was assessed for the upcoming solar power development. The table below shows the assumptions of IPP participation in the analysis and the financial implications of this pattern.

Table 6-12 IPP participation condition

	Assumption of IPP business	IPP's capacity（MW）
pattern0	IPP is not assumed	0
pattern1	Tenaru Solar Farm,Foxwood Okea Solar Farm	6
pattern2	pattern1 and SDA Solar Farm, Makira Province Land Near Foxwood Solar Farm	15
pattern3	pattern 2 and Tasahe Solar Farm, Barana Solar Farm	23

Source: JICA Project Team Creation

As a result, the initial capital investment cost will decrease and the generation cost will increase, which will affect the financials. Particularly, in the case of pattern 0 and pattern 1, where the IPP participation ratio is small, the year-end cash balance drops significantly in 2024. Therefore, Pattern 2 and Pattern 3 are recommended as they are expected to ensure a certain level of financial soundness. On the other hand, there will be a large difference in net cash growth in 2030 between Pattern 0 and Pattern 2, for example, so if the company wants to secure cash growth in the future, it will need to borrow a certain amount in 2024 as Pattern 0 or Pattern 1. In order to secure the highest priority for cash growth in the future, it is necessary to borrow a certain amount of money in 2024 as Pattern 0 and Pattern 1. In addition to financial soundness and financial borrowing, if we take into account the perspective of development speed and industrial promotion, it is desirable to have a certain level of IPP participation, such as Pattern 2 and 3, and various business environment improvements are required to achieve this.

Chapter 7 Promotion of Formulation and Implementation of Road Map

7-1 Review of the Issues raised in the 1st Phase

During the first Phase investigation, the issues such as tax system reform, credit risks and maturity of the PPP (Public Private Partnership) Unit had been raised. As a result, to attract the private investment to SI, the comprehensive guidelines for foreign investors are demanded thus the following points should be considered and clarified with related stakeholders in SI during the 2nd Phase. Moreover, Project Team communicates with the main development partners in SI such as the WB, ADB and bilateral donors to collect their latest project information.

- Suggestion on Land Issues;
  The data collection of available lands and recognition to national 'interest' project of solar PV are proposed in consideration to barriers for procurement of lands.
- Introducing small- and medium-scale Solar;
  Third party ownership model, operated in US, Japan, Fiji and other countries, are discussed and introduced as alternative option for land acquisition.
- Study and Promotion of Private Investment;
  IPP guidelines are drafted inconsideration to a reasonable risk allocation, targeting private sector participation into the power market. Sector reform of the power sector is also considered.
- Review of HR Development;
  Establishment of IPP office is proposed under the director of energy. Training scheme for engineer is also considered for capacity building.
- Scrutinizing investment capability to SP;
  B/S, P/L and C/F are studied to examine investment capability of SP.

7-2 Study on the Pacific and the Other Countries

The other Pacific countries are studied here as references to scrutinize the abovementioned issues and solutions. The study was conducted by desktop research in which Fiji, Papua New Guinea, and Vanuatu are picked up considering share of renewable energy, the enabling environment for private participation, land issue and availability of the sector information on the Internet.

7-2-1 Fiji

(1) Target of climate change and energy sector

Fijian government submitted NDC to UNFCC in which the target for the reduction of CO_2 emission is set as 30% with the reference period of 2013. Achieving the target, the energy sector is targeting 100% electrification rate by 2021 and RE 100% by 2036 with the current status of 97% and 55% respectively, as of 2019. The highest level of electrification rate in the Pacific has been achieved by the strong effort by the government: The government has invested grid extension, DG installation to rural areas where the national gird reaches, and development of micro hydropower and solar PV. Outer small islands are supplied directly by the government with gazetted uniform tariff among islands, while main four islands are supplied by Energy Fiji Limited (EFL) with profitability. Thus, to pursue the NDC and renewable target, Department of Energy (DOE) is seeking further cooperation with development partners.

(2) Land System

Lands in Fiji are categorized into three types; freehold land (approximately 6%), State (Crown) land (approximately 4 %), and iTaukei (Native) land (approximately 89.75%)[21]. Freehold land can be purchased, sold or leased by the Land Sales Act (Cap 137). There is a limitation in the number of lands purchased by non-Fijian and companies that is not fully owned by Fiji citizens. The land transaction is dealt with a real estate agent or directly with a landowner.

State land is owned and administrated by the Lands Division, the Ministry of Lands & Mineral

[21] Land Ownership in Fiji, iTaukei Land Trust Board (TLTB)

Resources under the Crown Acquisition of Lands Act (Cap 135). Available State Land for lease is announced on the website of the ministry.

The majority of the Fijian lands are categorized into iTaukei land. This is the lands inherited from the ancestors, similar to the customary land in SI. The big difference between customary lands in SI and Fijian iTaukei is that all iTaukei lands are registered with boundaries and landowners to iTaukei Land Trust Board (TLTB), a statutory body on behalf of landowners. iTaukei lands are available only for lease and TLTB administrates systematically the lands. Available lands are advertised on the TLTB's website, and developers are to submit an application form. This system was developed in the British colonial time and TLTB has operated since 1940.

(3) Small and medium solar

Sunergise, an NZ's solar power utility, is active in small- and medium-size solar PV business in Fiji. EFL has approached several investors for an own-use business model (Third-Party Ownership: TPO) and only Sunergise has signed contracts with EFL so far. In TPO scheme, a developer provides, install, and maintain facilities by developers own budget while rooftop owners can access to clean energy with lower price. The biggest rooftop solar PV was installed on an international beverage manufacturer with a capacity of 1.1 MW. The generation is sold to the beverage company with a competitive price to the grid and the surplus is reversed and sold to EFL. There are at least three rooftop projects for TPO other than the 1.1 MW project by Sunergise. Selling price from Sunergise to both rooftop owners and EFL are not revealed. A detail of TPO will be described in the later section.

Source: Sunergise Website

Figure 7-1 1.1 MW Rooftop Solar PV in Suva

(4) Mini-grids

EFL is the operator for the mini-grids within the EFL supplied islands, and they procure an EPC contractor through a tender. Once construction completes, EFL takes the responsibility of O&M.

DOE also procure EPC contractor for mini-grids within the DOE suppled islands through the government's Procurement Office. DOE, being different from EFL, has also been interested in procuring private operation for rural mini-grids. All commercial terms will be negotiable for the mini-grid operation due to no existence of standard terms and levels of subsidy as of 2020.

(5) Enabling frameworks for private investment

PPA format and sector reform seem to play key roles in promoting IPPs in Fiji. For PPP, PPP Act was set up in 2006, and the first PPP project for the redevelopment of two hospitals, supported by the International Finance Cooperation (IFC), was carried out in 2019. Capitalization of the scheme in the power sector is expected subsequently after the epoch-making project in the health sector.

Three biomass power project is operating as IPP, and EFL has concluded PPA with three new

hydropower IPP so far. Fiji Renewable Energy Power Project (FREPP) is, funded by UNDP-GEF and Fijian government, aiming to remove political, regulatory, market, finance, and technical barriers for increasing grid-connected renewable energy in Fiji. A standardized PPA format was developed under FREPP and publicized on the website[22]. The main purpose of the PPA is to define relating risks and core responsibilities between IPP and off-taker for power projects. The PPA also reveals the discussion points and allows for negotiation with the schedules. According to DOE, the terms of the condition is utilized in the actual PPA so far. In addition, the detailed conditions have been discussed between EFL and IPPs and that is confidential between both parties. Sector reform in Fiji is discussed in a later section.

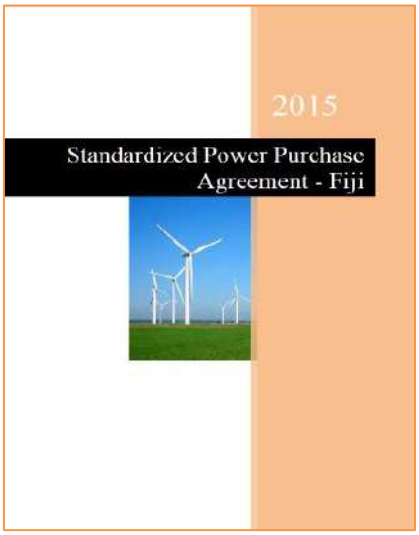

Section
1. Scope
2. Definition
3. Term
4. Supply
5. Purchase
6. Condition Precedent to Supply
7. Interconnection Arrangement
8. Metering Arrangement
9. Control and Operating Procedures
10. Dispute Resolution
11. Insurance Arrangements
12. Liability and Indemnification
13. Force Majeure
14. Specific Remedies and Liquidation Damages
15. Termination
16. Agreement Execution

Source: JICA Project Team based on Standardized Power Purchase Agreement

Figure 7-2 Standardized Power Purchase Agreement in Fiji

7-2-2 Papua New Guinea

(1) Target of climate change and energy sector

Papua New Guinea (PNG) submitted NDC to UNFCC in 2015[23]. The quantitative target for CO_2 reduction was not given while all generation is to be replaced by renewable energy resources by 2030. This is explained with their vulnerable economy and a negligible amount of Greenhouse Gas (GHG) emission to the total emission amount.

Vision 2050, a 40 years' development strategy for PNG, set the electrification rate as 70% and 100% by 2030 and 2050 respectively, while that in 2019 is estimated 13% with three main grids: Port Moresby (peak demand 126 MW), Ramu (95 MW), and Gazaelle 10 MW), and mini-grids. The unique issue in the PNG is that 87% of eight million population reside in rural area including small islands. According to the 25% of unelectrified households is required to electrify with mini-grids or other off-grid solutions for least-cost planning.

(2) Land System

There are three categories of land: customary rights, state-owned, and privately owned. Among the categories, over 97% of the land in PNG is held in the customary title, so that investors/developers are facing issues for land access similar to the other Pacific countries. There are mainly three options for the issue; i) compulsory acquisition by the government, ii) lease negotiation by the government (the

22 http://www.undp.org/content/dam/fiji/docs/OtherDocs/Environment/Fj_Final_Standardised_PPA.pdf
23 https://www4.unfccc.int/sites/ndcstaging/PublishedDocuments/Papua%20New%20Guinea%20First/PNG_INDC%20to%20the%20UNFCCC.pdf

Minister of Lands on behalf of the government), and iii) direct lease to the project in compliance to Incorporated Land Group Act (1974). Option 1 is generally avoided because it takes a longer time even with competitive price for the land.

(3) Small and medium solar

PNG power limited (PPL), the power utility in the sector, publicized "Notice on grid-connected Solar Photovoltaic System in Papua New Guinea" in December 2018 on their website. In 2019, they announced the launch of a one-year pilot project that initially allow 2 MW (equivalent to 2% of peak demand in Port Moresby[24]) to be generated from rooftops. The target for the pilot project is limited to customers in the commercial and industrial sectors with a maximum demand of more than 300 kVA. The size limit of rooftop solar PV is the customer's maxim demand or 1,000 kW, whichever is smaller. The surplus energy can be exported to the grid but PPL does not pay for it. Moreover, the customer will continue to pay a capacity charge that covers PPL's costs of providing capacity, under Independent Consumer and Competition Commission's (ICCC's) regulation, the regulatory body for multi sectors in PNG.

Through the pilot project, there are limited connections, which allows PPL to learn the practice in management and monitoring the impacts on the grid for the next implementation stage.

(4) Enabling frameworks for private investment

(a) Public Private Partnership

Public-Private Partner Act has been effective since 2014. The act defines the legal framework for PPPs. It establishes a PPP center, an unincorporated statutory body that is responsible for supporting the government in project development, procurement, and project implementation. However, to date, the PPP center has not functioned.

(b) Regulatory Framework

ICCC is the independent multi-sectoral regulatory authority, established in 2002. Within the ICCC, the Regulated Industries Division is responsible for i) licensing, ii) preparing regulatory contracts and carrying out the associated tariff reviews, and iii) approving third-party/IPP connections to the grid, especially for PPA price, connection fees, and wheeling charge under Third Party Access (TPA) code in the power sector. ICCC itself is an economic regulatory authority and does not have any technical expertise in the entity although the regulator has accountability for technical regulation likewise. In the situation, ICCC mainly depends on PPL for technical regulation, which might be problematic. In addition, PPL has not increased retail tariff since 2013 though the generation cost increased. Political capture and the independence of the regulatory framework seems to be doubted for the situation. Securing transparency in the regulatory authority is one of the issues in PNG.

(c) PPA Format

PPL has a draft PPA format for large-scale IPPs but it is not shared in public. The PPA has been negotiated between PPL and IPPs recently (gas, hydro, and biomass) so that the draft form has to be revised as bankable. For the small scale IPPs, there is no format for PPA nor is Feed-in Tariff (FIT) scheme. Commercial terms need to be negotiated case basis.

(d) New Framework for mini-grid

Focusing on the promoting mini-grid, Department of Energy and Petroleum (DPE) is currently planning to a sector reform supported by WB. National Electrification Rollout Plan and Financing Prospectus (NEROP) was drafted and has not been approved yet, as of March 2020. The rollout plan proposed setting up a new entity, Off-Grid Electrification Authority (OGEA) as an owner and licensed operator for all mini-grid in the nation. But OGEA will procure a private company or PPL for construction and O&M, meaning PPL is a competitor for the private sector, not a monopoly. Importance of promoting

[24] https://bernardosbagofbeans.com/2019/11/png-power-launches-scheme-on-grid-connection-of-rooftop-solar-pv-systems-in-png.html

mini-grid and required huge volume of it are emphasized in the least cost study for improving electrification rate so that this reform can be beneficial to increase private sector participation into the market. The proposed reform for mini-grid is summarized in the below.

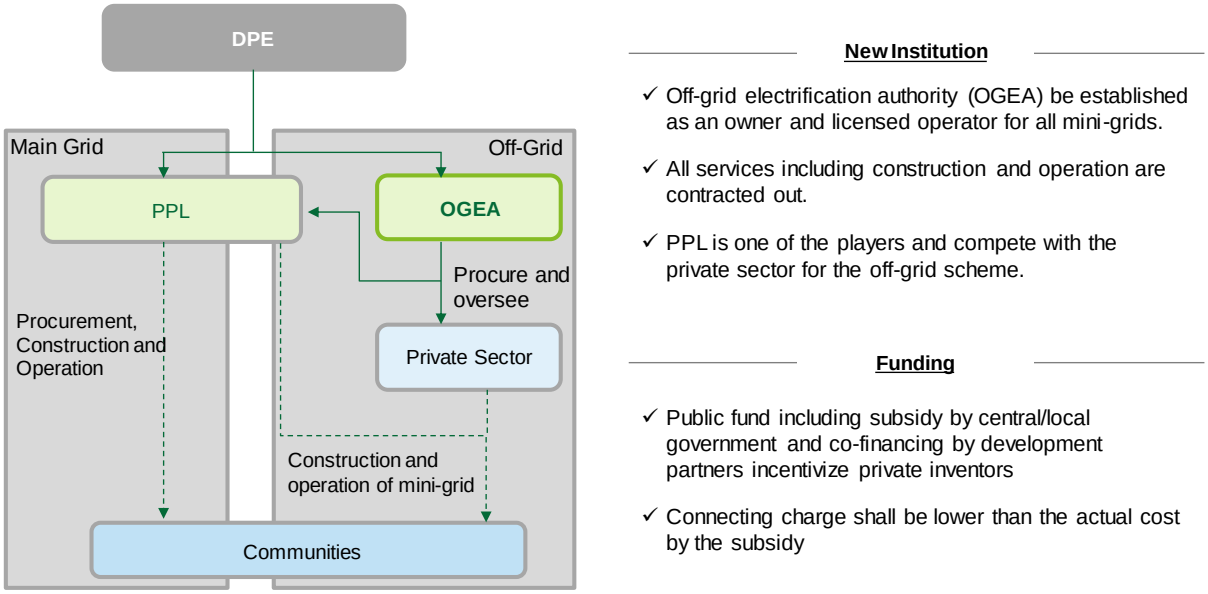

Source: JICA Project Team based on Draft National Electrification Rollout Plan and Financing Prospectus , EAC

Figure 7-3 Proposed Framework for Mini-grid Promotion in PNG

7-2-3 Vanuatu

(1) Target of climate change and energy sector

NDC target for GHG reduction in the whole energy sector is 30% while that in the electricity subsector is 100% with achieving RE100%. This target is consistent with the National Energy Road Map target of 65% renewable energy target by 2020. The targets of the electrification rate in concession areas are 90% in 2020 and 100% in 2030 from 62% in 2015. While the target of electrification rate outside the concession area is planned to improve as 100% in 2020 from 9% in 2015.

(2) Land System

95% of the total land in Vanuatu is titled as customary land and the other 5% is public land owned by the government. There are three options for developers to procure land: i) lease from the government, ii) lease from local religious institution including churches, and iii) lease customary land.

Leasing customary land, as other Pacific countries are, takes a longer time. The Custom Land Management Act (2013) establishes a framework for identifying customary land ownership through 'nakamals', the customary land's institution. The act also defines sets the process for determination of customary landowners. Complying with the Land Reform Act, the certified negotiator for negotiation of customary land will be appointed by the Department of Land. All developers have to negotiate lease through the certified negotiators with customary landowners.

(3) Small and medium solar

Utility Regulatory Authority (URA) has set out the FIT and net-metering scheme but due to legal challenge by Union Electrique du Vanuatu Limited (UNELCO), they are not effective. Thus, it is not clear if the commercial terms of rooftop solar PV are available in the concession area of UNELCO. The detailed structure of the sector including concession area is mentioned in the later section for sector reform. For promoting mini-grid, the government is cooperating with WB in rural areas.

(4) Enabling frameworks for private investment

URA once prepared IPP guidelines, named 'Preliminary Guidelines' and it is available in public[25]. However, the guidelines are not effective due to legal case against URA regulatory authorization in court while UNELCO utilizes their own PPA format that is not publicized. Vanuatu Utilities and Infrastructure Limited (VUI), another concessionaire, has not developed IPP procurement process so far. IPPs need to negotiate with UNELCO or VUI case by case basis with less information regarding commercial terms.

7-3 Technical Suggestion on Operations of Power Plants

7-3-1 Maintaining System Frequency and Voltage

In order to achieve RE 100% supply, diesel generators will be abolished. Since the Tina Hydropower plant is scheduled to start operation in 2024, the hydropower plant will be responsible for maintaining the frequency and voltage of the Honiara grid. Power generated by Tina Hydro will be transmitted to the demand area through two 66 kV transmission lines with one route. If an accident in the power line causes a situation in which the output of Tina Hydro is suppressed, it is necessary to maintain the system voltage and frequency by BESS. Therefore, it is necessary for BESS to have a function capable of autonomous operation and virtual power plant (VPP) function. In addition, it is also necessary to proceed with the removal of diesel generators in accordance with BESS introduction progress. If the diesel generator equipment remain, maintenance cost and fixed assets will also remain.

7-3-2 Supply Capability in Dry Season

In the dry season of 2030, there would be a shortage of supply, especially during peak periods according to the demand and supply simulation results. In order to secure this peak supply capacity, the operation plan of the Tina Hydro is important. If another reservoir for the hydropower plant can be installed, it is desirable to conduct a feasibility study for increased output. With respect to biomass generation, a feasibility study should be conducted in addition to potential survey.

7-4 Suggestion on Securing Land for new Solar PV

7-4-1 Tackling the Land Issue by the Government

As discussed in the previous sections, land acquisition is a major barrier in all infrastructure projects, including solar PV. The main cause of the problem is the registration system of land and its classification (registered land and customary land). To date, the following efforts have been done mainly in related ministries and agencies to solve the land problem by the government:

- MLHS: investigation and registration of customary land
- The office of Prime Minister and Cabinet (OPMC): a study on the design of a new land system based on Fijian land system
- Tina Hydropower: Commonly known as 'Tina Model'

(1) Investigation and registration of customary land

It is assumed that the investigation and registration work of the customary land promoted by MLHS will cost a great deal of money and time. Cadastral Information Unit dispatches a surveyor to the site to identify landowners and boundaries through public consultations and interviews with local tribal officials. Along with the registration of land information, the land category will change to registered land after the land price assessment and negotiation agreement. Because there are no clear boundaries between customary lands that have been inherited from generation to generation, and the price of land at a particular point is not clear, these negotiations take a long time and in many cases, even require judicial mediation.

(2) Study on a new land system referring to Fiji's case

[25] http://prdrse4all.spc.int/system/files/u-0003-14_preliminary_guidelines_20140606.pdf

It can be said that land issues root from customary land is common in the Pacific countries. Among them, the aforementioned management system of the native land in Fiji is well-known as a good practice in customary land operation. OPMC conducted an initial study on the system and operation and then, has concluded that it is difficult to adopt the system in SI. The reasons are:

- TLTB was established in 1940 under British rule and registration of customary land were proceeded by the strong political leadership. In modern times, too strong political leadership is controversial and has made it difficult to manage customary land in bulk from the perspective of protecting human rights.
- Customary land in SI is more fragmented than that in Fiji so that it is expected to have more landowners.

(3) Tina Model

Tina Hydropower development has spent more than a decade for starting construction of plants and dams since WB conducted a potential survey in 2007 mainly because of vast land acquisition of 430 ha in customary land. Land Acquisition and Livelihood Restoration Plan (LALRP) was finalized in the early 2017 and eventually started the construction work in December 2019. The following four factors are considered as the key for land acquisition for the Tina case. These techniques are bundled together among the parties concerned, and it is commonly called 'Tina model':

- Utilizing current law 'at most'
- Presenting the strong leadership by SIG
- Implementation of prior informal negotiation
- Enhancement of governance

(a) Utilizing current laws 'at most'

Concerning the current law, it refers mainly to the Land Title Act. Tina Hydro project, recognized as national benefits and is considered a public project, allowed for compulsory land acquisition. Negotiations with several tribes continued until a few months before the construction started. Abiding by the law, each required process was processed－changes in land titles, holding public consultations, estimation of land prices, and deposit payments－and started the construction work in the end.

(b) Presenting the strong leadership by SIG

A project management office (PMO) was established, led by the SIG, and input budget and human capital to a great extent to dedicatedly deal with project issues. Due to the project scale and a number of stakeholders from both development partners and SIG ministries－WB, ADB, GCF, Australian Gov't, and NZ gov't from donor sides, and OPMC, MOF, MDPAC, MLHS, and other ministries from SIG side, coordination among each stakeholder is one of the important tasks as well as negotiation on land issues, which needs workforces and time. In the case, PMO benefits by responding to all relating issues exclusively. From this, the leadership of SIG, which led to the establishment of the PMO, has contributed to the success of a land acquisition.

(c) Implementation of prior informal negotiation

In the land acquisition process in SI, the coordination between the parties concerned and the simultaneous legal process generally make land acquisition situation more complicated in SI. Mitigating the problem, Tina project started informal talks and public consultations between the parties involved before a formal legal process, which spent two years. It is analyzed that this 'lay the groundwork" was successful, and dispute with the customary landowners were considerably lower than the expected and land acquisition process completed successfully in the end.

(d) Enhancement of governance

Even after the land title is transferred by current law, there are many cases in which a person claiming ownership of the land appears and develops into a lawsuit, disrupting the project. Governance for land acquisition process needs to be strengthened to circumvent the situation. It was considered as a key for success on land acquisition to strengthen governance by effectively using PMO, ministries in the current legal framework, along with the above three items.

Based on the efforts of SIG so far, a strategy on solving the land acquisition problem is explained by each short, medium, and long-term step. Figure 7-4 illustrates the concept of the strategy.

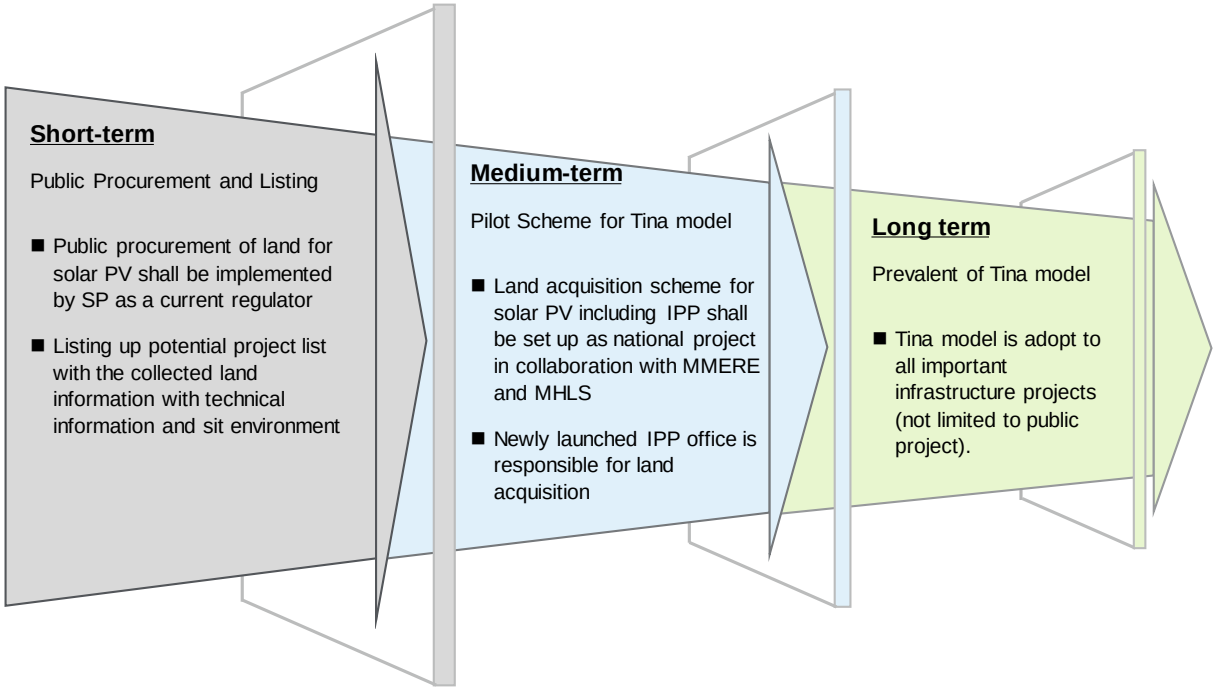

Source: JICA Project Team

Figure 7-4 Strategic Concept for Solving Land Acquisition Issues

7-4-2 Short-term Strategy

Considering RE 100% target in the Honiara grid by 2030, a bunch of lands of 70 ha at most shall be secured at the early stage. SP, as the utility-regulator in SI, is supported for public procurement for securing land within registered land in this project. In particular, public procurement of land is considered by using local newspapers such as Solomon Star and The Island Sun. Although utilizing cash power system－printing an advertisement for land procurement－was once studied, it would be costly to change the system and finally given up.

Aiming to promote private investment, it is also beneficial to publicize the pipeline of solar PV projects, which describes the status of land acquisition and various project information (expected installation capacity, interconnection availability, and access status to the site).

7-4-3 Medium-term Strategy

To promote private sector participation in the energy market, it is necessary to explore new schemes to secure land for renewable energy projects. Leveraging the experience in the Tina project, the main focus is to formulate a standardized process which incorporates the exact practice in the Tina project and implement a pilot project with the Tina model. The current Land and Title Act (Cap. 133) stipulates that compulsory land acquisition takes place if the project contributes to national interests.

Taking advantage of the current law and then proceeding with the land acquisition as well as Tina project regardless of the public and private projects by meeting certain requirements. Therefore, it is desirable to define solar PV and other renewable energy projects as national projects with public interests, not limited to public projects but also private projects. Requirements referred to herein is assumed such as the grid-connected solar PV with a capacity of 1 MW or more, hybrid system (solar PV, batteries, and

DGs) or the off-grid. MMERE is expected to lead the introduction of the new scheme in collaboration with MLHS and other related agencies.

7-4-4 Long-term strategy

Achieving sustainable development of all infrastructure projects, not just in the power sector, a comprehensive land system (customary land registration system) is strongly required in SI. While the registration work of the customary land conducted by MLHS is proceeding, it is not taken into consideration in this long-term strategy. Instead, it is desirable to examine and revise the pilot project under the proposed standardization of the Tina model, which will be implemented in the mid-term plan, and then be institutionalized. Considering the sector balance, it is, however, appropriate to be a temporary energy/land legislation until solar PV plants increase to a certain volume for the designation of the national project.

7-5 Study on Promotion Method of Small/Medium-scale Solar PV

7-5-1 Potential Sites in Honiara Grid

Rooftop solar PV needs a robust building design to support the equipment so that fragile and aged buildings and houses are unsuitable for the installation. In addition, the supply is expected for a long term from the viewpoint of power development planning. Considering these points, government and public buildings and large commercial buildings can be candidate sites for the rooftop. New terminals at Honiara International Airport, ministries, the central market and large commercial buildings on Mendana Avenue can be suitable sites as well as new individual houses. Rooftops of sports facilities for the Pacific Games 2023 can also be applicable for it.

7-5-2 New Business Model

An amount of small- and medium-scale solar PV systems are required to achieve RE 100% in the Honiara grid. Incentivizing individual households, an introduction of new business model is essential for the sector. Third party ownership (TPO) is one of the solutions for it as carried on in the countries where the proportion of renewable energy has increased. TPO providers lease solar PVs to households for free while households pay lease fee or electricity charge that is cheaper than market price, depending on the models.

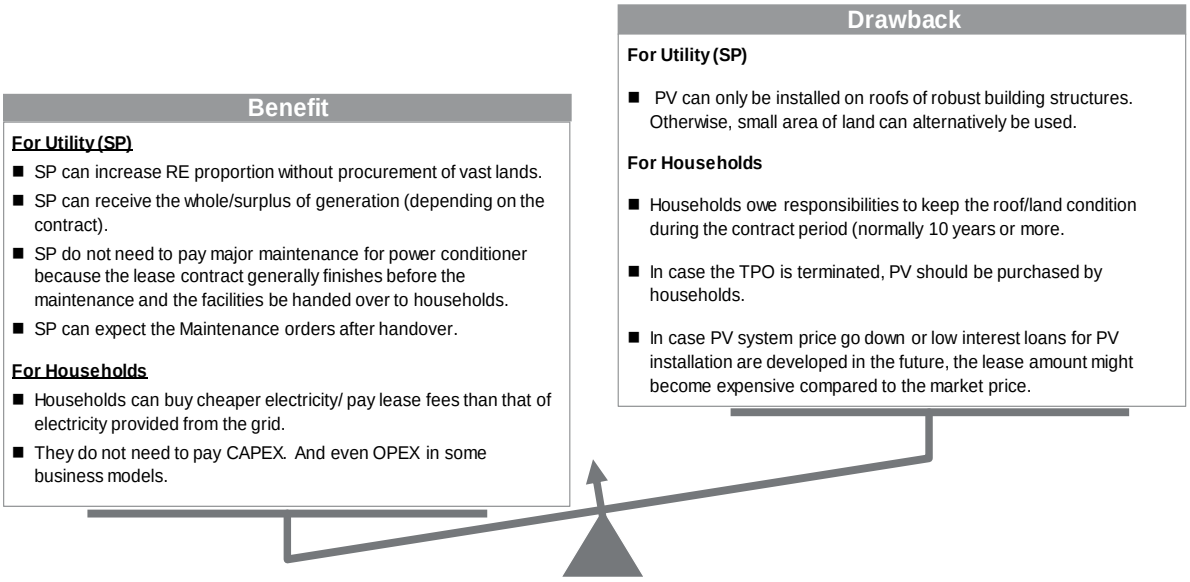

Source: JICA Project Team

Figure 7-5 Benefit and Drawback of Third Party Ownership Model

Figure 7-5 describes general benefits and drawbacks of TPO business model referencing cases. The largest advantage for SP is that the capacity and proportion of renewable energy can increase without procurement of any land. While, households would enjoy clean energy with cheaper price than market one for electricity; free installation and discount electricity bill. Turning onto drawbacks of TPO, PV can only be installed on roofs of robust building structures so that many individual houses in Solomon Islands would be unsuitable. Moreover, households shall owe responsibilities to keep the roof/land condition during the contract period (normally more than ten years). Provided that households demolish a house and stop generation, they have to purchase the equipment. Weighing both benefits and drawbacks, advantages would overcome as long as discount electricity bill/lease price are cheaper than market selling electricity price.

Figure 7-6 illustrates examples of two business models of TPO in Japan; (a) roof lease model and (b) power-linked lease model. In example (a), all contract is signed between two parties including power supply. TPO company proposes a discount electricity price during a contract period and hand over PV facility after a contract period. All facility do not belong to households but to TPO company, meaning that TPO company shoulders CAPEX. Defect liability is also provided by TPO company during the TPO contract period. Households can purchase electricity in a discounted price such as 10% discount with 10 years contract and 20% discount with 20 years contract. TPO company can sell excess generation to the grid during the period.

In example (b), a household holds two contract; one is for lease contract with TPO company and the other is for net-metering with a grid company. TPO company installs solar PV and households pay interlocked lease amount to TPO company during the contract period. The generation belongs to households and they are able to consume it and even to sell excess to the grid company (net-metering). In this example, maintenance is not provided by TPO so that household shall keep the condition themselves to keep a feasible contract.

In Solomon Islands, TPO concept is brand-new and there is no net-metering scheme so that example (a) is more suitable due to its simplicity. The concept can be an alternative revenue source of standby charge for SP.

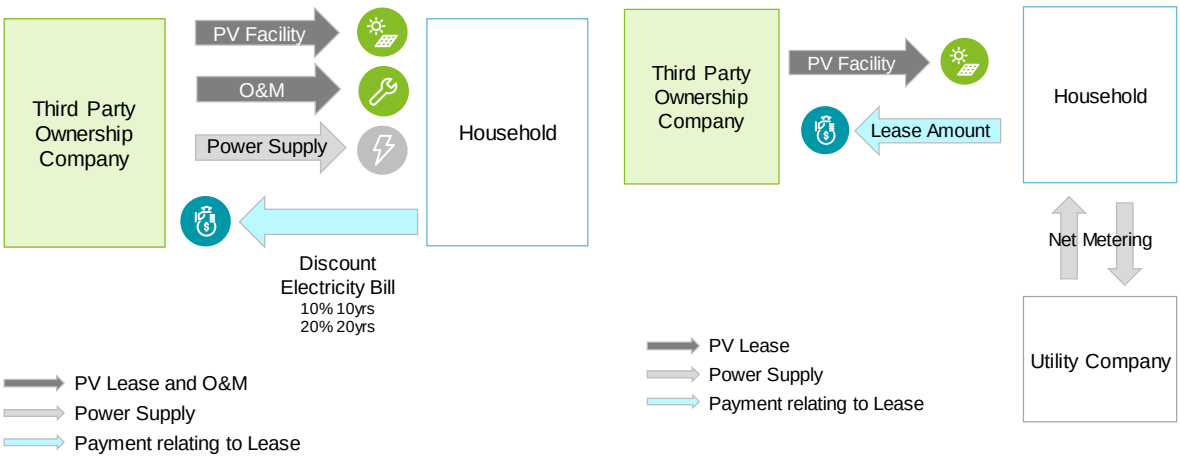

Source: JICA Project Team
left: (a) Roof lease models with household's benefit, right: (b) power-linked lease model

Figure 7-6 Third Party Ownership Models in Japan

7-6 Promotion of Private Investment

Finalizing a standardized IPP guidelines is one of the goals of the Project. A guidelines is being drafted in which the risk allocation is specified and apportioned together with key stakeholders in SI such as SP

and MMERE. In addition to that, the Project Team interviewed to potential investors (Singaporean, French, New Zealander, and Japanese), international organizations that works for the private sector (IFC, ADB) and domestic firms in SI that is seeking opportunities in renewable energy and advertised the IPP guidelines.

Honiara branches of foreign banks appreciated SP's financial resilience as an investment target while potential investors in Japan concerned about country risks of SI during the first phase. Aiming to notify the business environment in SI and attract Japanese investors, a seminar will be held in the first quarter of 2020 in Tokyo and the draft IPP guidelines will be advertised to them likewise.

In this section, the reference and main concept for risk allocation in the guidelines are discussed in the followings.

7-6-1 References for IPP guidelines

The IPP guidelines is being drafted in consideration with examples of IPP guidelines and PPA forms in other countries, including Fiji, Vanuatu and India. PPP schemes is also studied because the concept of risk allocation among stakeholders is similar to IPP guidelines and PPA. The Project Team aims at announcing the guidelines in public, especially to foreign investors, by MMERE and SP on the website of them or at the international forums such as an annual meeting of the Pacific Power Association and Asia Clean Energy Forum hosted by ADB.

Table 7-1 List of References for IPP and PPA

Category	Document
Examples in the Pacific	・PPA Form (Fiji, etc.) ・IPP Guidelines (Vanuatu, etc.)
Examples of the international organizations	・ASEAN Principles for PPP Framework ・World Bank Group (Public-Private-Partnership Legal Resource Center (PPPLRC)) format for Power Purchase Agreement (PPA) ・International Finance Corporation (IFC) IPP Guidelines
Case Study on IPP of Renewable Energy in other developing countries	・Good Practice：Fiji, South Africa etc. ・Failure Cases： Palau, etc.

Source: JICA Project Team

The Project Team lists up required regulations and schemes for introducing IPPs, including tax exemption and currency convertibility, in consideration of the business environment and investment risks for foreign investors.

7-6-2 Risk Allocation in the IPP Guidelines

Establishing a standardized IPP guidelines should play a key role for foreign investors to estimate their risk money and determine investment because in many cases, it contains a concept of risk allocation between IPP and stakeholders. The Project Team is drafting the guidelines in accordance with IPP guidelines and PPA forms in other countries listed above and deepening discussion about the allocation based on our proposal (Table 7-2).

Table 7-2 Proposed Risk Allocation (Draft)

Project Risk in SI	Discussion Point	Risk Taker and Description	Remarks
Approval	Arrangement of all permits including licenses	IPP with SIG support	Single-window facilitator* / MMERE support IPP
Land Acquisition	Securing the land for IPP	IPP with SIG support	Project pipeline to be indicated by single-window facilitator* /MMERE
	Negotiation with land owner	IPP with SIG support	Single-window facilitator* / MMERE support IPP
Specification	Operating Characteristics-Annual operation (kWh), frequency, power factor	IPP	–
Local contractor (sub-contractor)	Requirement of contractor	IPP with SIG support	Recommendation of local contractor to be provided by single-window facilitator*/MMERE or SP
Peripheral Infrastructure	Scope of land	Access road > IPP* Transmission line > off-taker	–
	Interconnection	SP under the Electricity Act 1969	Comfort letter shall be issued by off-taker
PPA negotiation (especially for tariff)	Payment logic	Take and pay (PV without battery)	PV with battery shall be discussed by case
	Tariff adjustment	Fixed tariff	–
Loan contract	Finance close	IPP	Local currency + hard currency (US$) with index
Social and environmental risk	Environmental Impact Assessment (EIA)	IPP with SIG support (local and WB/IFC rules)	Single-window facilitator* / MMERE support
Dispute resolution	Governing law	IPP and off-taker	Solomon Island law
	Arbitration	IPP and off-taker	Australia or international (i.e. ICC) An exact rules/location to be agreed by IPP and off-taker
Liability and indemnification	Liquidated damage (LD)	Performance / delay LD	
	Termination	Either party by written notice	'Step-in' right to be included in PPA

Note: SIG support may be considered in case the civil work

Source: JICA Project Team

During the discussion with SP, the specific risks are clarified to balance investors' appetite and government responsibility and risk allocation. Main discussion points of each risks are as follows.

(1) Securing the land for IPP and negotiation with landowner

Land acquisition in SI is one of the biggest challenges and negotiation process with landowners is complicated. Thus securing the land for IPP needs to be resolved led by the government in cooperation with IPP otherwise IPP wouldn't be able to foresee the risk related to the land acquisition in SI which is essential to the IPP project development.

(2) Operating characteristics

Generation of renewable energy projects is variable by the weather. Specifications of operating characteristics such as annual operating level (max./min.), frequency control and power factor need to be determined for stable IPP project management and delivery of power generation with an eye on the future.

(3) Local subcontractors

Local contractors have an insufficient capacity of construction works for a power plant in SI and so far, Fijian EPC contractors play the main role for SP projects. On the other hand, concerning the new business model (i.e. rooftop PV) which is proposed in this project, local construction companies for civil works and building construction are considered to be able to respond as a contractor. The recommendation of local contractors by SP is expected to promote the utilization of these local contractors by the IPPs,

(4) Scope of site (Peripheral Infrastructures)

Considering local circumstances in SI such as challenges to the land acquisition, waterways and road within the IPP premises can be considered as a scope of site-related peripheral infrastructures. The attached road other than the IPP premises is expected to arrange by the government.

(5) Tariff adjustment

A long-term fixed tariff is expected for a stable operation of IPP projects. No major cost fluctuation is expected such as soaring material cost during the construction and of the PV projects. Therefore, an escalation clause is not adopted (Besides, the relief process will be discussed with SP in case the tariff adjustment occurs due to the tariff review by the government.).

(6) Conditions of Tax/Insurance and tax exemption arrangement

If there are tax and insurance forms which comply with international standards, the cost should be borne by IPP can be foreseen. The tax exemption to the PV projects is expected in consideration of the targeting RE 100% in Honiara grid by 2030. The details (format and procedures of tax exemption) will be clarified with SP and related organizations.

(7) Location and governing law of arbitration

It is essential to have a transparent process in case of dispute and arbitration following international standards. Governing law of arbitration, in particular, requires to comply with international standards so that the rules of Singapore international arbitration center is proposed as the governing law which is referenced in the PPA forms in Fiji.

7-6-3 The Possibility of Private Investment

We conducted several interviews to the potential foreign investors from Singapore, Japan, and others, to understand their preference to risk allocation for IPP business. In particular, they expect a government support to secure land and share information of project pipelines. Investors also prefer 'Take or Pay' for the payment logic while they understand 'Take and Pay' is realistic for variable renewable energy sources including solar PV. These suggestions were reflected in the considerations of the risk allocation for the IPP guidelines to appeal to foreign investors.

Besides, we interviewed NPF that is interested in diversifying their portfolio and in the interview, they showed an interest to partner with foreign investors. Development partners such as IFC, Australian government and New Zealand and government also implicated potential investors in SI as well as in the Pacific. We have also interviewed some of the potential investors and confirmed their appetite for investment in the power sector.

7-7 Capacity Building Strategy

7-7-1 Capacity Building Initiatives in the Pacific

It is difficult for single country in the Pacific to organize comprehensive capacity building alone because they have a small population and budget in each country. Tackling the issue, several organizations have been established to support the Pacific across the region (Table 7-3). These agencies are working with international organizations and governments to promote specific projects (Table 7-4).

Table 7-3 Major Support Agencies in the Pacific

No.	Name of institution	Overview
1	PRIF (Pacific Regional Infrastructure Facility)	・In cooperation with support organizations and the private sector on the development of the Pacific ・Established in 2008
2	EU PACTVET (European Union's Pacific Technical and Vocational Education and Training)	・The EU-funded PacTVET project is currently being implemented by Pacific Community (SPC) and The University of the South Pacific (USP) ・Project budget: EUR 6.1 million ・Target countries: 15 Pacific countries
3	PPA (Pacific Power Association)	・Intergovernmental regional organization established by a power company operated in pacific island countries (PIC) ・Established in 1992, Secretariat is Fiji ・25 Utilities in the Pacific Islands (22 countries) and 115 companies interested in the development of the power industry in the Pacific Region ・Promote cooperation of Utilities in Pacific countries for technical training, information exchange, sharing of senior management and engineering expertise, etc.
4	SPC (Secretariat of the Pacific Community)	・Major science and technology organizations in the Pacific region. Established in 1947. 26 countries and regions ・Support the empowerment of Pacific society and the sharing of expertise and skills between countries and regions

Source: JICA Project Team created from public information

Table 7-4 Case Studies of Capacity Building Projects in the Pacific

No.	Implementation organization	Time	Name of the issue
1	SPC & USP	2014-2019	EU PacTVET
2	JICA, EFL, Department of Energy (Fiji), PPA	2017-2022	Introduction of Hybrid Power Generation Systems in Pacific Island Countries
3	SEIDP	2018-2020	Sustainable Energy Industry Development Project
4	USAID	2017-2022	Pacific Climate Ready
5	USP・Elemental	2018-2019	ITP Masdar Training
6	ADB, Tetra Tech	2018 – 2023	Tetra Tech Capacity Building @Improving Island Energy Systems in the Pacific
7	ACSE	-	PPA ownership of accredited Grid connect solar, battery and standalone power systems.
8	United States Department of Interior (US DOI)	-	Pacific Linesmen Training (PLT)

Source: JICA Project Team created from public information

7-7-2 Capacity Building Initiatives in the Renewable Energy sector in Solomon Islands

Various efforts have been made to build capacity in the renewable energy sector in SI. In 2014, for instance, the electric training program of solar PV in Malaita for female engineers was implemented with the support of the Australian government and ADB. Besides, the main issues for capacity building in SI are to establish new courses on renewable energy and to secure budgets for training and relating facilities.

According to the interviews to local stakeholders, it can be said that two types of capacity building are required for the energy sector in SI: (1) human resource development in government and government agencies and (2) training local contractors and engineers in SI. It is essential to conduct necessary training in the execution/implementation body in the RE projects. Besides, the development of local EPC companies and industries, such as capacity improvement is an important issue to pursue RE 100% by construction works and O&M of large-scale solar PV. The status quo of (1) and (2) is as follows.

(1) Organization chart and human resource development plan (MMERE)

MMERE is the line ministry for the energy sector of SI. The Department of Energy has 10 staff under its umbrella oversees energy policies and regulations, and strategic plans. Three to four staff members engage in the renewable energy project of the Honiara grid.

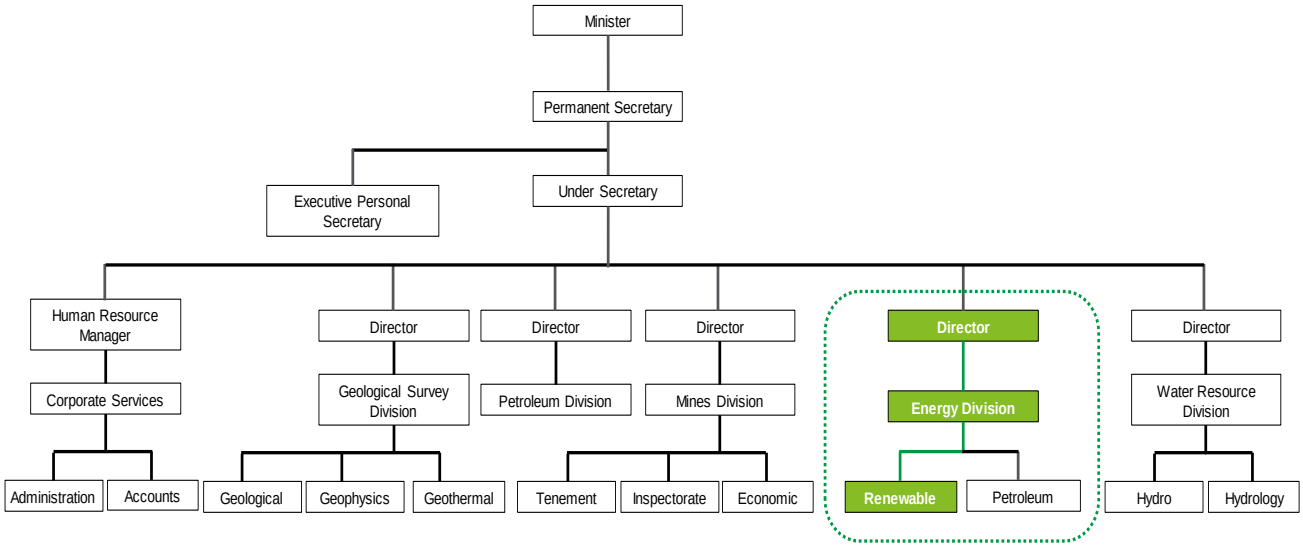

Figure 7-7 MMERE Organization Chart

Source: JICA Project Team

In the fiscal year 2019, MMERE prepares 13 training courses with both long-term and short-term trainings-policy planning MBA for long-term one, and international workshops and conference organized by specialized agencies (such as IRENA) for short-term one. The technical focus, however, on these pieces of training is on energy conservation and local electrification, and training for renewable energy and IPP are limited. More detailed training menu examples are shown in Table 7-5. To promote RERM, it is expected to actively participate in the training program of the Pacific Power Association and other countries that knows the Pacific.

Table 7-5 Example of Planned Training Menu in 2019 for MMERE

Training Category	The Section	Training / Course	Participants	Duration
Training Local	Rural Electrification	Diploma Course in Solar Design and Installation - SINU	3	2 years
Training Local	Energy Efficiency / Ozone Protection unit	Diploma Course in Systemon and air-conditioning - SINU	1	2 years
Training Overseas	Policy Planning & Management	Master's Degree Renewable Energy	1	2 years
Training Local	Policy Planning & Management	MBA	1	2 years
Training Local	Energy Efficiency	Refresher Training on enforcement to control imports of electrical appliances	3	Tbc
Training Local	Ozone unit	Refresher Training on enforcement to control imports of ozone layer depleting substances	3	Tbc
Seminar Local	Policy Planning & Management	National Sustainable Energy Investment Forum	4	2 days
Workshop overseas	Energy Efficiency / Ozone Protection unit	Good Servicing Practices into National Training and Certification programme for Shizuoka & Air-conditioning technicians – Port Vila, Vanuatu	1	3 days
Workshop overseas	Energy Efficiency / Ozone Protection unit	Development of the Regional Pacific Island Countries HCFC Phase-out Management Plan Stage II	2	2 days
Workshop overseas	Energy Efficiency / Ozone Protection unit	Eleventh Meeting of the Ozone Research Managers of the parties to the Vienna Convention for the Protection of the Ozone Layer	1	Tbc
Conference Overseas	Rural Electrification	Global Off-Grid Solar Forum & Expo, Nairobi, Kenya	1	3 days
Conference Overseas	Policy Planning & Management	10th IRENA Assembly Meeting, Abu Dhabi, UAE	1	3 days
Conference Overseas	Director And Energy Efficiency - Ozone Protection unit	32nd Meeting of the Parties to the Montreal Protocol	2	5 days

Source: prepared by JICA Project Team based on MMERE's Document

(2) SP's Plan

SP provides more than 140 training courses to their staffs, allocating SBD 5.9 million (USD 77.7 million) in 2019. A variety of courses are planned from technical to administrative training-i.e. solar farm development, HOMER/PV System. SP is active to capitalize oversea training and collaborate with Pacific Power Association (PPA) likewise. More examples are tabulated in Table 7-6 in below. It seems that SP would plan reasonable and suitable training to their personnel along with the development situation of the sector. From the viewpoint of their motivation and budgeting for human resource development, it is expected SP can pursue RERM.

According to the current SP power plan, 12 MW of PV will be introduced in 2022, and it is expected that PV output will exceed demand. Therefore, in 2022, it is hoped that the operators will understand the grid operation centered on renewable energy, the functions of EMS and BESS (including VSG functions), and the operation method. The specific number of operators is assumed to be 2 for each shift (shift length +1) and 2 for the SP headquarters. If it is a 5-shift system, a total of 12 people, 10 + 2 people, who are proficient in VSG operation will be required.

In conjunction with this, in order to realize the most economical system operation, it is required to be familiar with EDC operation. Therefore, although it depends on the progress of the SP PV introduction plan, if the introduction is expected as planned, it is considered that training on the operation and operation of EMS / BESS is necessary by 2021.

Table 7-6 Example of Planned Training Menu in 2019 for SP

TRAINING CATEGORY	SECTION	TRAINING / COURSE	PARTICIPANTS	DURATION
In House Training	HSE	First Aid Training	Selected	
In House Training	Planning	Homer/PV Syst	8	5 days
In House Training	Planning & Capital Works	Microsoft Office - Intermediate to Advanced Level	5	3 days
In House Training	Planning	Power Purchase Agreements and IPP	10	1 day
In House Training	Generation	Welding - TIG/MIG	4	TBC
In House Training	Generation	Operator	35	10 Days
In House Training	Generation	Fire Fighting	Selected	1/2 day
In House Training	Internal Audit	Training on Auditing software (Teammate)		TBC
In House Training	Transmission and Distribution	Safety Manual	ALL	
In House Training	Transmission and Distribution	HV Switching [Power Station, 33/11kV Sub]	12	3 days
In House Training	Transmission and Distribution	HV Switching [RMU & Outdoor switches]	12	3 days
In House Training	Transmission and Distribution	Substation maintenance	12	5 days
In House Training	Transmission and Distribution	Electric Powerlineman training Mod 3 & 4	14	2 wks
In House Training	Transmission and Distribution	Protection Relay Testing training	12	5 days
In House Training	Management Accounting	Budget Training	20	1 day
Training Local	Land & Building	Construction Mangement	1	2 Years
Training Local	Land & Building	Environmental and Conservation Law making for provincial government	1	TBC
Training Local	Land & Building	Contract Drafting for Non-Lawyers	1	TBC
Training Local	Regulatory	Customer Services	1	TBC
Training Local	Transmisison and Distribution	Customer Service Skills	7	2 days
Training Local	Transmisison and Distribution	Managing Workplace Conflict	7	2 days
Training Local	Procurement Logistics	Fuel Handling - Outstation Operators	1	
Training Local	Electrical Engineering	Maintenance Planning and Scheduling	2	5 days
Training Local	Electrical Engineering	Transformer maintenace	2	5 days
Training Local	Electrical Engineering	Solar repair maintenance	2	2 days
Training Overseas	Electrical Engineering	Bachelor of Engineering [Honors]	1	Ongoing
Training Overseas	Technical	Masters of Engineering Science [Power]	1	Ongoing
Training Overseas	Planning	Maintenance in the Electricity Industry	2	5 days
Training Overseas	Planning	Distribution Planning	2	5 days
Training Overseas	Planning	Power System Protection	2	5 days
Training Overseas	Planning	Introduction to Substation Design	2	5 days
Training Overseas	Planning	Solar Farm Development	3	5 days
Training Overseas	Chief Engineer	Engineers Courses	1	3 days
Training Overseas	Generation	MAN Diesel Engine Operation & Maintenance	2	7 days
Training Overseas	Internal Audit	Operational and Performance Auditing - Brisbane (IIA Australia)	1	4 days
Training Overseas	Regulatory	Risk Management and Control Assurance- SUVA- FIJI	1	5 days
Training Overseas	Regulatory	Licensed Inspector - Assessment & Tutorial	1	
Training Overseas	Regulatory	Utility Attachment - EFL & Other Utilities	1	
Training Overseas	Management Accounting	Project Cost Management	1	3 days
Training Overseas	Electrical Engineering	Generator AVR/Excitation	1	5 days
Training Overseas	Electrical Engineering	Portection/Relay testing using Omicron gears	1	3 days
Training Overseas	Electrical Engineering	Renewable Energy Finance: Preparing And Financing Projects	1	3 days
Training Overseas	Human Resources & Administration	Human Resources development and Workforce planning	3	3 days
Seminars Overseas	Chief Engineer	PPA Annual Conference	1	3 days
Seminars Overseas	Chief Engineer	PPA Engineers Workshop	3	3 days
Seminars Overseas	Land & Building	Annual Affordable Housing Seminars	1	5 Days
Seminars Overseas	Regulatory	PPA Workshops & Conferences	2	
Seminars Overseas	Regulatory	Energy Storage	1	
Seminars Overseas	Regulatory	Regulatory Forum	2	
Seminars Overseas	Regulatory	New 2018 Wiring Rules	2	
Seminars Overseas	Regulatory	Metering Seminar	1	
Seminars Overseas	Electrical Engineering	SCADA	2	2 Days

Source: prepared by JICA Project Team based on SP's Document

(3) EPC Contractors in SI

According to a local EPC contractor, they emphasis the importance of renewable energy projects for their business because the more renewable energy projects are expected in the future. On the other hand, the main challenge for contractors in Si is to meet the following bidding requirements by themselves:

- Installation records (both PV and hybrid)
- Financial capabilities (the corporate's turnover should be financially equivalent to the project size or to more than double)

We also interviewed to the EPC contractors in Fiji (Clay Energy and CBS Solution). Both companies have an ample experience in SI and will continue to work on the SI projects, depending on the terms of the deal. They are also motivated to do capacity building, such as technical guidance to local suppliers. In addition, the countries in the Pacific the in-house capacity is missing and many countries do not have local procurement regulations in place. No matter which country you participate in the bid, the international competition with Fiji, New Zealand, European and Chinese companies is often to occur.

(4) Hybrid project (PV+ battery +DG) by MECC

Selwyn College project is a pilot project for hybrid system (PV + battery + DG). We interviewed the design staff about the hybrid project (Selwyn College) designed by SI national and visited the project site. Ministry of Environment, Climate Change and Disaster Management and Metrology (MECC) (SICAP) plans to adopt the hybrid system to 10 project sites in total, which are a school-based, across the nation. Although SP is promoting local electrification, there is an intention to cooperate with this system, which is packaged by local school electrification and renewable energy project construction and sees the Selwyn College project as a pilot project.

- Specifications: Hybrid (Solar Power + DG + Batteries) and electricity provided to the boarding school.
- Capacity: 160 kW (PV), 120 kW / 18 kWh (battery), 110 kVA / 88 kW (DG). School demand is 20 kWp.
- Implementation of contracts: Local EPC Contractor. The installation is a Fijian company (CBS). Focusing on employment from local communities and hiring carpenters and other workers from neighboring communities.
- Delivery time: 2 years (2017 to 2019). The duration is divided into two parts (capacity building part and project construction part). Construction period is 1 month of design + 6 months of construction.
- Local procurement conditions: 8% of the evaluation is for local procurement conditions, the employment of at least three SI nationals, and the Electric Contractor license holding in SI

Site location (blue point)

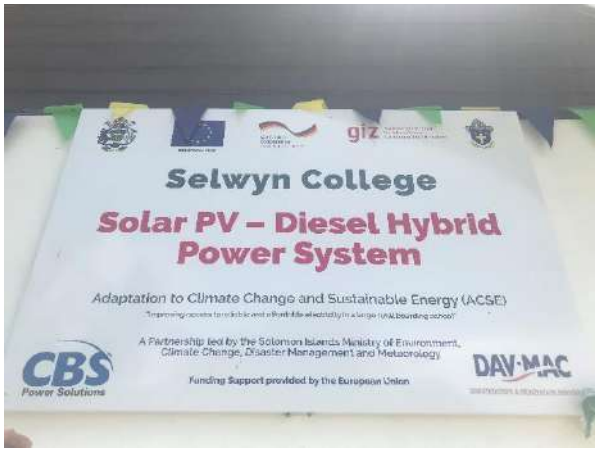

Project name

Site view

Battery building

Source: JICA Project Team

Figure 7-8 Overview of the Selwyn College - Hybrid Project Site

(5) Renewable energy engineer training program by SINU

SINU (Solomon Islands National University) has launched renewable energy engineer training program supported by the EU and GIZ (German Agency for International Cooperation) and the diploma course is currently ongoing from January 2020. This program is proposed by SPC (South Pacific Commission)/ GIZ to OPMC and in 2015, MMERE's director requested SINU a strategic cooperation. This diploma course technical assistance project is in a package with the Selwyn College project.
About the technology related to renewable energy, practical training using equipment is conducted. It aims to acquire the technology of wide system design (grid-connected type, stand-alone type and battery). The outline is as follows.

- Admission scan: Screening of competencies, holding electrical engineer qualifications, admission requirements
- Duration: Three blocks (6 weeks × 3) + on-site training (3 months × 2) in the industry (also as evaluation)
- Degree: A diploma upon completion of the program (specialty: photovoltaic power generation system). Equivalent to level-5 in the Australian education system
- Personnel: 60 people/year. 13 at the time of the first period recruitment, Scheduled to be recruited for a second term around April 2020

Classroom (students, instructors)

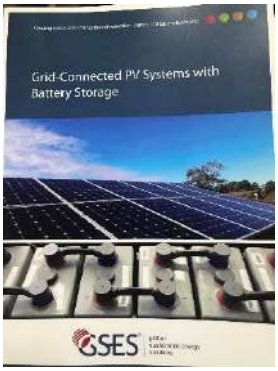

Text

Battery for training

Training equipment (PV on the roof)

Source: JICA Project Team

Figure 7-9 Diploma Course at SINU

7-7-3 Recommendations for Capacity Building

With regard to capacity building in the renewable energy sector in the SI based on the interviews to the stakeholders in SI, the recommendation is as follows.

- Establish the IPP Office under Director of Energy, MMERE. This will bridge private investors and government as a single-window facilitator with MMERE's leadership. The knowledge and human capital in Tina project will be utilized for the IPP Office. Moreover, comprehensive training for new officer will be conducted in the Office.
- New courses on hydroelectric power generation operation, solar O&M, batteries and EMS O&M, optimal operation of grid system and system planning will be launched at SINU. However, appropriate technical and financial supports from donors are desirable at the start of the course. Cooperation with PRIF/PPA, institutions carrying out a wide range of training programs in the Pacific, is also expected.
- 10 hybrid projects, similar to Selwyn College, are expected across the nation. In this case, cooperation with OPMC, MECC and MMERE are expected and aim to make in-house manufacturing in SI from system design to construction.by recruitment from SI national engineers (especially recommending engineers acquiring Diploma at SINU).

(1) Establishment of an IPP Office

MMERE is expected to take the responsibility for introducing renewable energy projects but as mentioned above, manpower and knowledge to the renewable energy sector in MMERE are limited. Tackling the problem, it is desirable to establish an IPP office (tentative name) that will implement IPP projects.

South Africa is well-known as a good practice of successful government-led introduction of IPP for renewable energy in the energy mix of the nation where fossil fuels were the mainstream (more than

90% of coal-fired power generation). In 2011, the Department of Energy (DOE) reviewed its energy policy to review the renewable energy purchasing process. REIPPP (Renewable Energy Independent Power Producer Procurement) was decided to be introduced, and the IPP office was established as an execution organization for REIPPP (Figure 7-10). DOE published transparent guidelines for REIPPP to investors and IPP.

IPP office was established under the DOE by a memorandum of understanding among the three organization (DOE, National Treasury and Development Bank of SA). The IPP office is located at a different address from the DOE headquarter in Pretoria. Under the leadership of the head of the IPP office, the team consists of experts from several law firms in South Africa. The IPP office is operated independently from the government and is self-funded with IPP project costs. The role is to coordinate with IPPs in cooperation with financial institutions, the South African Power Regulatory Authority (NERSA) and the South African Government, and to manage contracts for IPP projects (including the preparation of PPA documents), evaluation, and monitoring.

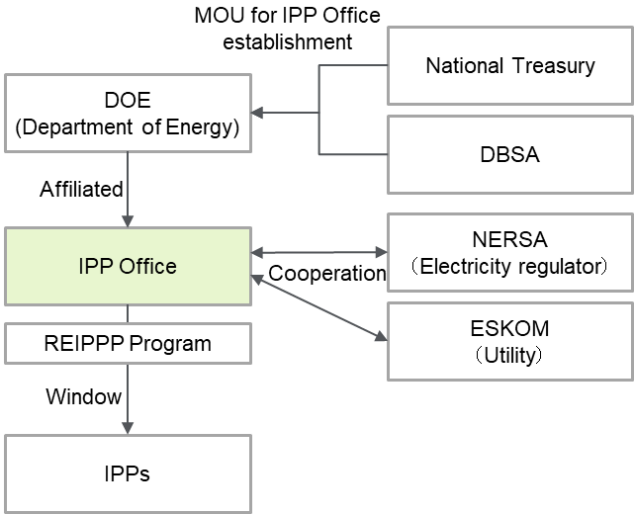

Figure 7-10 South African Power Sector Organizational Structure

Source: JICA Project Team created from public information

Aiming to improve the ratio of renewable energy by IPP entry, it is, as described above, desirable to establish an IPP office that serves as a single-window facilitator as well as to formulate highly transparent IPP guidelines.

As a single-window facilitator, the IPP office is subject to permission from foreign investors, systems, and potential land referrals. In interviews with SI officials in this project, there were several opinions that the use of Tina Hydropower's project experience would lead to a successful introduction of IPP for renewable energy. It is, therefore, proposed that the IPP office will cooperate with Tina Hydropower's project office and utilize its knowledge and human resources. The IPP Office shall be set up directly under the Director of Energy from the perspective of implementing government leadership.

Based on the foregoing, the responsibilities of the IPP Office are summarized as follows:

- Primary point of contact for IPPs (including advisors)
- Procurement management
- Monitoring and evaluation
- Contract management (including management of PPA format)

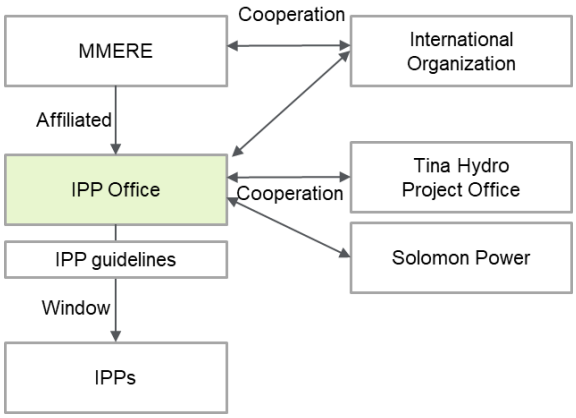

Figure 7-11 Proposal of the IPP Office (Tentative Name) Organization

Source: JICA Project Team

(2) Launch of New Diploma Course at SINU

The SINU's diploma course for training engineers for renewable energy, specialized in solar PV, will be developed for other technology: hydroelectric power generation operations, batteries/EMS O&M, grid system optimal operation and grid system planning. However, since the budget for the existing PV program has been secured only for fiscal 2020 so far, appropriate technical and financial supports from development partners are required to expand the courses. It is also conceivable to set up a limited-time course bearing the name of a private company from both local and international ones. Cooperation with PRIF/PPA, an institution with a wide range of training programs in the Pacific, is also expected.

(3) Training Local Contractors and Engineers in SI

At the early stage of renewable energy introduction, local procurement requirements are beneficial for local suppliers in SI. This seems suitable for small-scale projects in accordance with the capacity of local contractors at this moment. On the other hand, large utility-scale solar PV projects will encourage IPP to enter the market.

For small projects, MECC plans to develop the hybrid project nationwide that was implemented at Selwyn College. There are, however, only two cases (Waimapuru National Secondary School and Pawa Secondary School) that will be funded by GEF (Global Environment Facility) while MECC plans about 10 projects in total. It is expected to utilize the support framework of the Green Climate Fund (GCF) and the Pacific Environment Community Fund (PEC).[26] It is expected to recruit engineers who are awarded a Diploma at SINU, aiming to make 'in-house' project engineering in SI from basic design to construction. It is suggested that the hybrid project is not only for boarding schools but also the surrounding community, which can play an important role for rural electrification by local production.

7-8 Suggestion on the Regulatory Authority in the Power Sector

7-8-1 Types of Utility Regulators in the Pacific

Regulatory authority's characteristic in the Pacific is categorized mainly into three: independent single-sectoral regulator, multi-sectoral regulator, and regulatory power in government. Figure 7-12 illustrates the overview of benefit and drawback of each regulatory pattern. Severe risks can be circumvented with multi-sectoral regulator's framework whereas the others embrace critical risks such as political and industrial capture that can cause corruptions. Each regulatory framework is studied and recommendation for SI is discussed in this section.

[26] For more information on the support framework, please see 7-9 .

	Benefit	Drawback
Regulatory Power in Government	• Move forward with strong Top-down leadership	• Imposed to 'political capture' risk • Imposed to 'industrial capture' risk
Single-sectoral Regulator	• Easy to specialize in a single sector • Easy to establish compared to multi-sectoral regulator • Reducing risk of political capture	• Less efficiency with small sector and economies • Imposed to industrial capture
Multi-sectoral Regulator	• Sharing resources • Facilitating learning across industries • Reducing 'political capture' risk • Reducing 'industrial capture' risk	• Lacking an ample industry-specific expertise • Affecting all sectors under the regulator by failure

Source: JICA Project Team

Figure 7-12 Overview of Benefit and Drawback of Regulatory Pattern

7-8-2 Regulatory Power in Government

There are several cases that the government grasps regulatory authorization power in Pacific[27]. This is mainly due to a lack of capacity in an institution and human capital. In these cases, regulatory power is in hands of a line ministry, and the sector is mainly developed by political leadership. Besides, the situation of 'all eggs in one basket' could result in the hotbed of political capture as well as industrial capture. Politician and government officials are required high personal integrity in the case. These capture might cause unforeseen situations

Regulatory power in Government sometimes substantially affects business plans of IPPs. An international energy giant has experienced a failure in their IPP business plan in Palau. They had once signed PPA with Palau Public Utilities Corporation for 30 years by unsolicited proposal and burgeoning to Presidents and some politicians. The National Congress finally rejected the concurrence to the PPA and the contract was cancelled.

7-8-3 Independent Single-sectoral Regulator

Independent single-sectoral regulator is a regulator who is responsible for energy sector only and is established as independent body from both utility and government. Single-sectoral regulator can be better for developing its expertise. Tonga is an example in the Pacific. Figure 7-13 illustrates the organizational chart Tonga Electricity Commission (TEC), Tonga's energy regulator.

[27] Regulatory authorization is under jurisdiction of the line ministry in Kiribati, Marshall, Micronesia and Nauru as well as Palau.

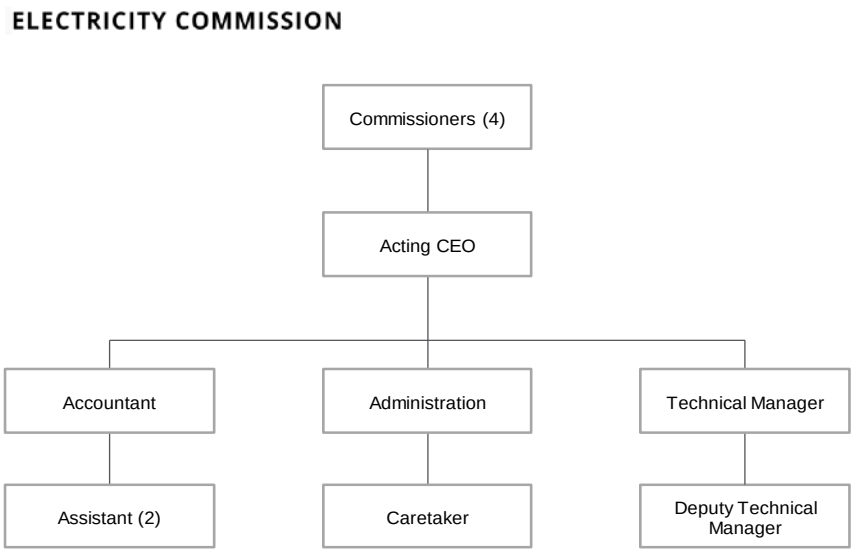

Source: Prepared by JICA Project team based on information from electricity Commission

Figure 7-13 Organizational Chart of Electricity Commission

TEC was established in 2018 under the electricity Act 2007 and their principal functions are described in the Act as followings:

Table 7-7 Function of Tonga Electricity Commission

Function	Description
Public safety role	➢ Develop and recommend regulations establishing standards for Electrical Safety; ➢ License electrician; ➢ Develop and recommend regulations establishing requirements for major electrical works, including maintenance or protection for submarine cables
Economic Regulation oversight function role	➢ Carrying out all activities required under any concession contract; and ➢ Take any enforcement action required; ➢ Developing and recommending regulations establishing powers for a concessionaire (in addition to those set out in the concession contract or undertaking any work pursuant to a concession contract)

Source: prepared by JICA Project Team based on Electricity Act 2007

These functions include the regulation of tariffs, establishing consumer service standards, managing electrical safety as well as the licensing of electricians and creation of regulations for major electrical work.

Tonga Power limited (TPL) is a state-owned enterprise providing reliable, safe and affordable electricity as its core service around Tonga and it operates under a strict regulatory framework through the Electricity Concession Contract (ECC) in which tariffs, operational efficiency benchmarks, consumer service standards and penalties are regulated by the TEC. TPL has its own company constitution and also operates under the Public Enterprise Act 2010 which provides greater commercialization incentives for state-owned enterprises. TPL is entrusted with enforcing the Electricity Act. TPL has been established with an independent Board of Directors drawn from the commercial sector of Tonga, appointed by Government of Tonga.

The 1st concession contract signed between the TEC and TPL was in 2008. In 2015, the second ECC was signed. This contract has a 5 yearly reset process for updating the agreed baseline for the calculation of the power tariff in Tonga. This reset process provided the Regulator with the opportunity to promote and modify the regulatory instrument to replace the concession contract (2008), one which better reflects

the realities of the energy market in Tonga as of 2016. It takes into account the recent policy to maximize the use of renewable energy sources with implementation targets of 50% and 100% set for dates in the not-too-distant future. It addresses the asymmetrical bias (in favor of TPL) in the contract (2008) which bias the regulator views as inimical to the interests of Tonga's consumers.

7-8-4 Independent Multi-sectoral Regulator

Many countries in the pacific adopt independent multi-sectoral regulator mainly because of scale of economy: scale of utilities is generally small in these countries to accommodate single-sectoral regulator.

Schwartz and Satola (2000)[28] discussed advantages and disadvantages of multi-sectoral regulator, summarizing in Figure 7-14.

The sufficiently transparent environment in the market is significant for encouraging the private sector to enter a new market. Setting up an independent regulator is one of the solutions to create an enabling environment for private investment. Regulatory functions for electricity is currently granted to SP by the Electricity Act (1969) while SP is utility and a generation company. In order to circumvent conflict of interest, it is preferable to transfer the authorization function, including tariff setting, licensing of generation, promoting competition and technical codes and standards, to an independent regulator from the viewpoint of attracting private investment.
Many countries in the pacific adopt independent multi-sectoral regulator mainly because of the scale of the economy: the scale of utilities is generally small in these countries to accommodate single-sectoral regulator. More key advantages and disadvantages are summarized below.

[28] Tim Schwarz and David Satola, Telecommunications Legislation in Transitional and Developing Economy, World Bank (2000)

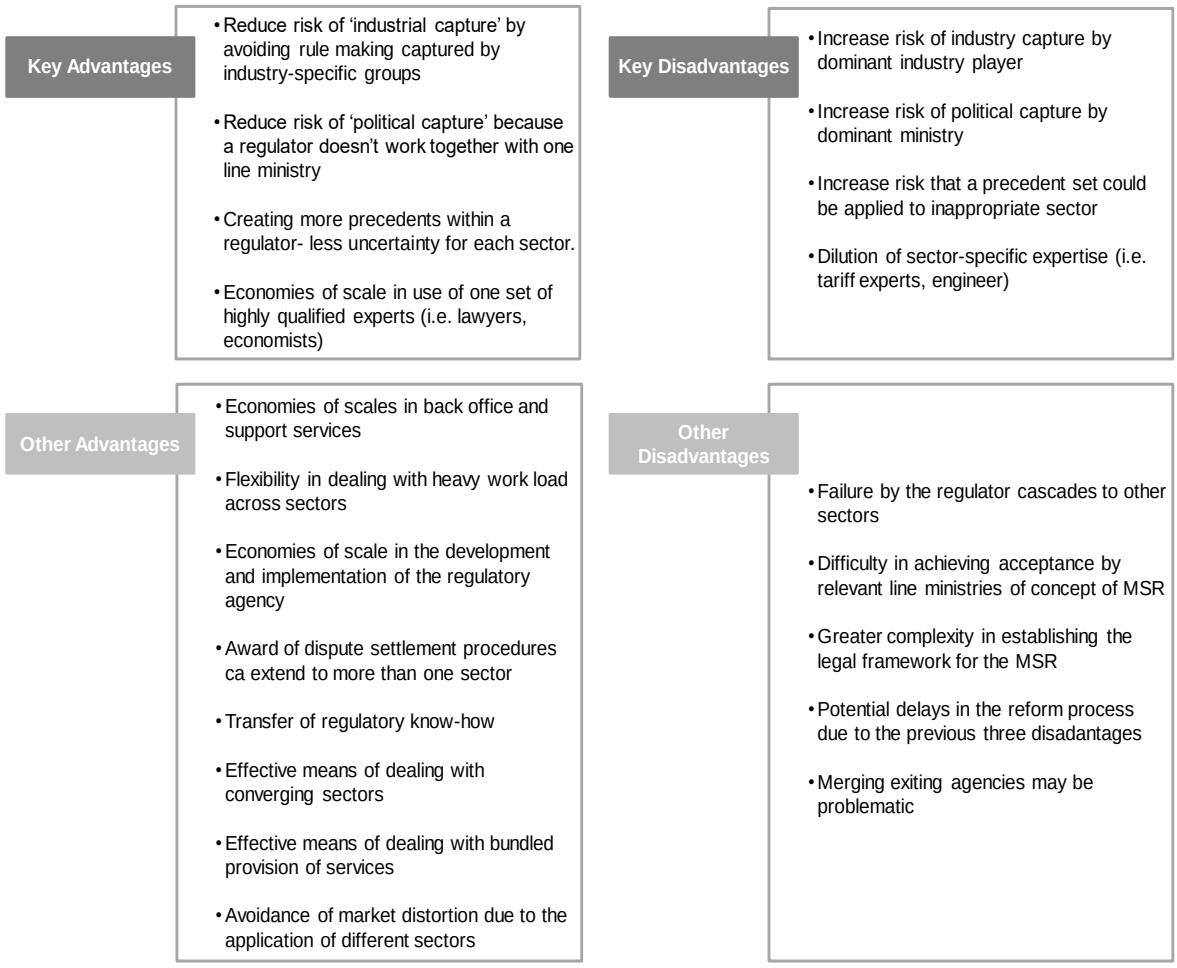

Source: prepared by JICA Project Team based on Schwarz and Satola (2000), World Bank Technical Paper no. 489 (2000)

Figure 7-14 Advantage and Disadvantage of Multi-sectoral Regulator

(1) Case 1 Fijian Competition and Consumer Commission (FCCC) in Fiji

Table 7-8 Transition of Regulatory Function

Function	Regulator before the Gazette (LN-88)	New Regulator after the Gazette (LN-88)
Tariff setting	FCCC/EFL	FCCC
Licensing	EFL	FCCC
Promoting competition	FCCC	FCCC
Preparation of technical codes and standards	EFL	FCCC
Dispute resolution	FCCC	FCCC

Source: JICA Project Team

Energy sector reform in Fiji, supported by ADB, is currently in the process that has been conducted step-by-step. Fijian Energy Authority (FEA), a former regulator, serviced all function in the energy sector including generation, transmission, distribution and regulatory authority as a state-owned enterprise under Electricity Act (1966), as same as SP in SI.

Through the Financial restructuring, Fijian Competition & Consumer Commission (FCCC) was established under the Fijian Competition & Consumer Commission Act in 2010 to encourage fair market competition, and FCCC has taken responsibility for price control of retail electricity price. FCCC has

given FEA/EFL an advice for wholesale electricity price likewise. Fijian Parliament approved a new Electricity Act (2017) and the regulatory power was completely transferred to FCCC in Sep 2019[29] (see Table 7-8). The remarkable change in this transition is transferring regulatory power of licensing to FCCC, aiming to avoid conflict of interest between Energy Fiji Limited (EFL) and IPPs. More participation of private sector in the energy market is expected.

FEA was converted to EFL (corporatization) in 2018 whose share folders are currently the Fijian Government (75%), Fijian National Provident Fund (FNPF: 20%), and individuals (5%). According to the Electricity Act (2017), EFL total share will be finally held by private sector by 44%. The below figure describes the organizational chart of FCCC. Sector specialized officers are assigned under Economic Regulation, Price Control, Competition and Compliance, and Legal Risk and Governance departments while administrative officers work across the sectors under HR, Finance, and ICT.

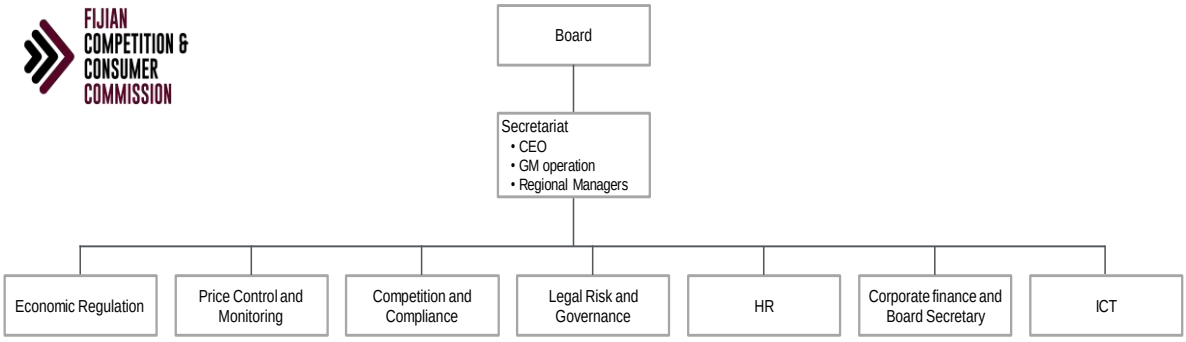

Source: Prepared by JICA Project team based on information from electricity Commission

Figure 7-15 Organizational Chart of the Fijian Competition and Consumer Commission

(2) Case 2 Office of the Regulator in Samoa

WB supported the sector reform of telecommunication and postal sector in 2002 and the Office of the Regulator (OOTR) was launched in 2006 under the Telecommunication Act 2005. Afterwards, the Electricity Sector Supervision Division was established within OOTR under the Electricity Act 2010. The new organization structure was reflected at the end of 2011-2012 and Ministry of Finance has allocated budget in the fiscal year of 2012-2013 for OOTR to manage energy regulation. Now that OOTR manages four sectors including the broadcasting, and postal service sector.

The functions of OOTR for the energy sector are the followings:

- Licensing for generation and network operation
- Setting and reviewing tariff
- Establishment of standards

Electric Power Corporation (EPC), a state-owned enterprise, was the utility-regulator and previously held the function of setting tariff and establishing standards. Since OOTR launched, private participation has been encouraged with renewable energy, which increased RE proportion to 50% (in 2018)[30]. EPC is supplying power as a one of generators as well as a single grid operator.

[29] Transition of licensing regulatory was gazetted on 30th Sep 2019 (Legal Number-88 in 2019).
[30] (Draft) A Guide to Investing in Renewable Electricity Generation in the Pacific, IFC (2018)

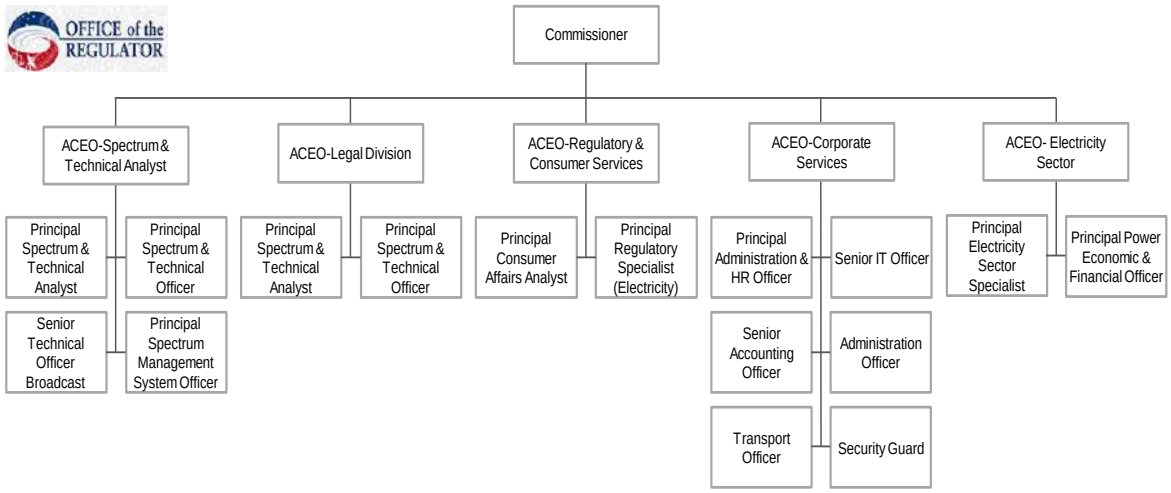

Source: Prepared by JICA Project team based on information from electricity Commission

Figure 7-16 Organizational Chart of the Office of Regulator

(3) Case 3 Utilities Regulatory Authority in Vanuatu

In Vanuatu, private companies supply by Concessionaire Agreement (4 concessionaire areas) with the Government. Two companies currently supply four concessions: UNELCO, supplying three concessions, namely Port Vila, Malekula and Tanna, and Vanuatu Utilities and Infrastructure Limited (VUI), supplying one that is Luganville. Third party, including IPPs, can only sale generation to the concessionaire within the concession areas due to exclusive commercial rights for concessionaires in the areas.

Energy sector reform in Vanuatu started in 2006 supported through an initiative of Governance for Growth (GfG) funded by DFAT. URA, an independent multi-sectoral regulator for electricity and water sector, was established under the Utilities Regulatory Authority Act in 2008. URA is mainly responsible for monitoring operations of concessionaires, tariff pricing (maximum tariff for wholesale and retail electricity), safety and reliable standards, and policy advisory for electricity and water supply. After URA launched, VUI, a subsidiary of Pernix Group Inc., an American construction company won the concession tender for Espritu Santo in 2010 and started power supply in 2011. It was the first time for UNELCO whose shareholders are Engie (French company: 60%) and Vanuatu National Provident Fund (40%), to lose a concession since 1930s. Moreover, Vanuatu enjoyed significant reduction in electricity tariff: 14% in port Vila and 21% in Malekula by URA's price controlling function. UNELCO is unsatisfied with the tender's outcome and currently suing the result. VUI is, therefore, operating by the MOU with the Government and retender is under consideration. In addition, URA's regulatory power is not robust legally so that UNELCO has challenged a lot against URA regulations so far. The government has been working on amendment process of Utilities Regulatory Authority Act and Electricity Supply Act. These process should be carefully monitored as a reference for SI.

Figure 7-17 shows the organizational chart of URA. Three commissioners are appointed by Minister of Climate Change and natural Disaster. Design concept is similar to the multi-sectoral regulator in Fiji and Samoa.

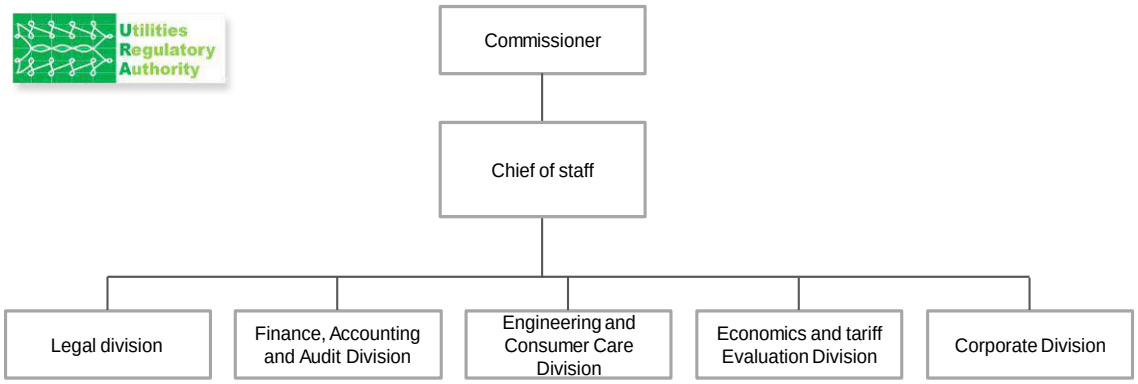

Source: Prepared by JICA Project team based on information from electricity Commission

Figure 7-17 Organizational Chart of Utilities Regulatory Authority

7-8-5 Establishment Strategy for Multi-sectoral Regulator

Discussed in the previous section, independent multi-sectoral regulator is more reliable and cost-effective regulator than single-sectoral one and governmental authorization. In this section, two patterns are studied: (a) new creation of an independent regulator and (b) transition from the existing independent single-sectoral regulator to a new multi-sectoral regulator.

(1) New Creation

An independent multi-sectoral regulator model could be appreciated among industries and investors if it is established in the early stage of the sector reform. The model could provide clearer vision and framework for sectors with investors－both current and potential ones-than others. The multi-sectoral regulator is also beneficial for legal framework. The multiple sector reform with legal framework would bring more complexity to the reform process. On the other hand, the significant effort could be required with political sides. Relevant ministries must be convinced to release regulatory power and influences to the regulation framework.

(2) Transition from Single-sectoral to Multi-sectoral Regulator

A second method for set-up new multi-sectoral regulator is to transform the existing independent single-sectoral regulator to a new multi-sectoral regulator. In this process, there are two methodologies: (i) establishing new regulator outside of the existing regulator and merging it with the existing one, and (ii) launching a new department in the existing single-sectoral regulatory body and reform after a while.

It is significant for case (i) to set up a new regulator as an independent body. Reform process might face to the same situation with (a), provided that it is established as a body under ministerial power. This process has disadvantages－it delays multi-sectoral regulator as bolstering learning lessons from other industries within among sectors at the early stages of each of them. Less influence of each sector over new multi-sectoral regulator would cause resistance against merger process.

For case (ii), reform process could reach a deadlock at the first step of reform process by the impedance of the existing regulator. The regulator would avert dilution problem of institutional capacity that has built up through a long-run operation. Both cases require substantial political will and strong leadership with effective coordination among the sectors.

7-8-6 Suggestion on the Power Sector in Solomon Islands

(1) Reference Case in Solomon Islands – Telecommunication Sector

Telecommunication sector is the only sector that accommodates an independent regulator in SI, apart from the governmental arrangement. Solomon Telekom Limited (TSL), trading as Our Telekom, enjoyed monopoly in the market while they were the regulator of the sector before the reform –the sector was utterly similar to the current energy sector. STL was privatized and the current shareholders of TCSI are Solomon Islands Provident Funds (SIPF: 97.32%) and the Investment Corporation of the Solomon

Islands (ICSI: 2.68%).

The current Telecommunication law was enacted in 2009 that established Telecommunication Commission of Solomon Islands (TCSI) as an independent single-sectoral regulator. TCSI had been supported through technical assistance budgeted by WB[31]. The finance was fully supported by WB for the first five years after launching. Now that TCSI is operating completely independent financially and providing competitive market environment with three mobile and internet providers[32], reaching financial revenue of SBD 750 million per annum. The organizational chart of TCSI is illustrated in the below figure.

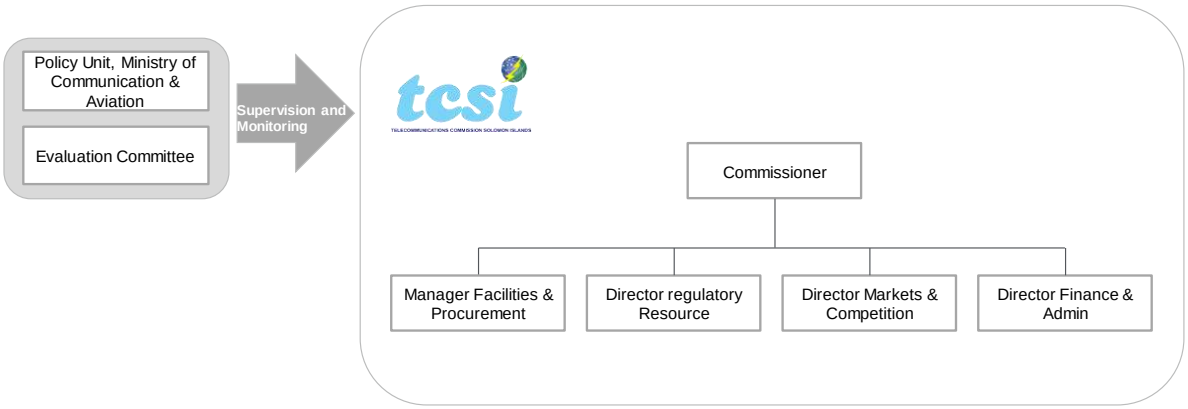

Source: JICA Project Team

Figure 7-18 Organizational Chart of Telecommunication Commission of Solomon Islands

Four management members are assigned under the Commissioner for facilities & procurement, regulatory resource, market & competition, and finance & administration. The Commissioner is appointed by the recommendation of the evaluation committee that is comprised of Chairman of the Law Reform Commission, the Governor of the Central Bank of Solomon Islands and CEO of Solomon Islands Chamber of Commerce and Industry (SICCI). The evaluation committee is also responsible for monitoring the commissioner and TCSI's operation to ensure the transparency and independence.

(2) Suggestion on the regulator in Solomon Islands

As shown in other Pacific country case, a soft-landing process for formulating independent multi-sectoral regulator is recommended to circumvent resistance by each sectors and political and industrial captures. The reform process might have 3 steps.

[31] Solomon Islands Telecommunications Technical Assistance Project (approved in March 2010)
[32] Our Telkom, Bmobile, and SATSOL

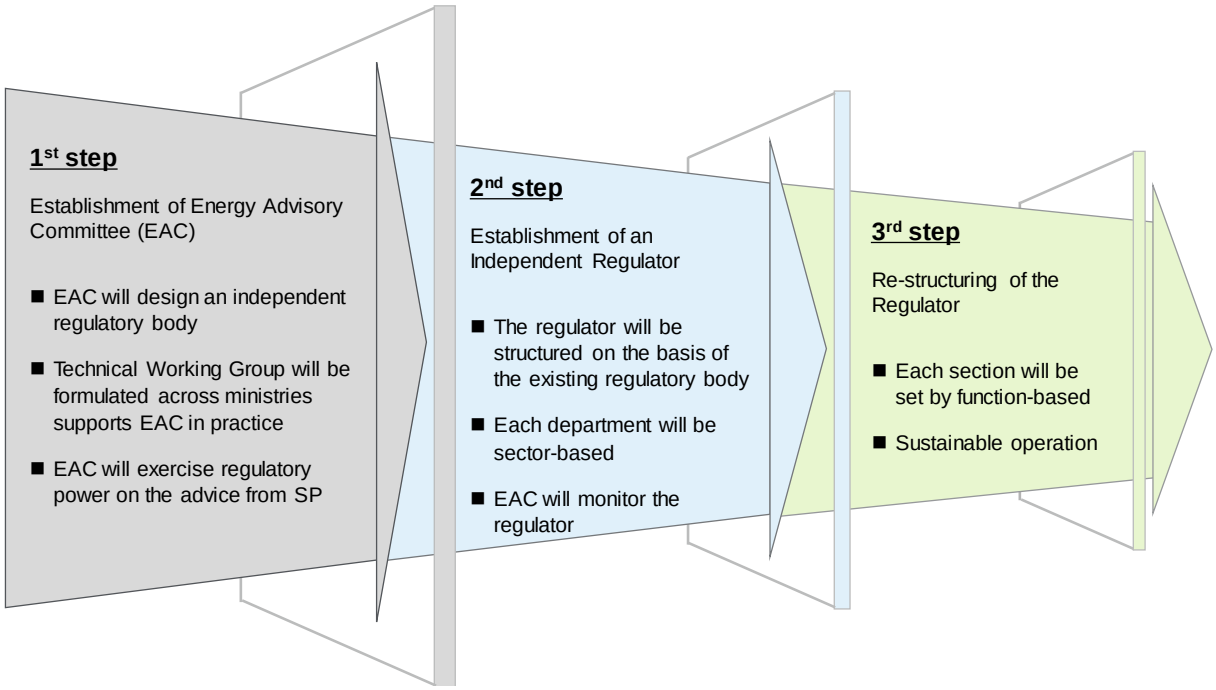

Source: JICA Project Team

Figure 7-19 Sector Reform Steps with Multi-sectoral Regulator

(a) 1st Step

The first step is the establishment of energy advisory committee (EAC) chaired by the permanent secretary of MMERE. The EAC will be comprised of 12 ministries and public bodies. In particular, Ministry of National Planning and Development Coordination (MNPDC) will play a key role to coordinate the government's and development partners' development plans. EAC will exercise regulatory power including licensing, tariff setting and technical regulation by SP's advice on the step. EAC is planned as a high level committee and under EAC, the technical working group (TWG) is established as an executing body to carry out practical works.

(b) 2nd Step

The second step is formulating a new independent regulator, Solomon Islands Consumer and Competition Commission (SICCC). EAC will design the organizational structure of the regulator on the first step. Existing regulator in the other sector have functioned properly so that SICCC will be structured incorporating them. The department will be sector-based for this step because of avoiding the capacity dilution problem of the existing regulator by dramatic transformation. This allows SICCC to learn an ample lessons from the existing regulator. Potential impedance of each regulatory body in the future be mitigated through operation by the oversight commissioner for all sectors. EAC will be responsible to monitor SICCC as policy implementation body.

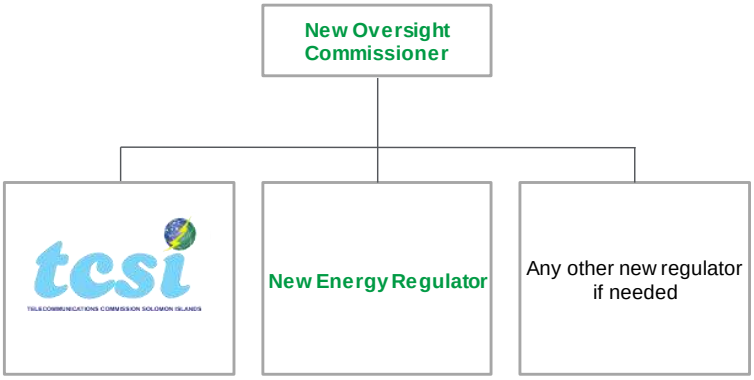

Source: JICA Project Team

Figure 7-20 Proposed Organizational Chart of Multi-sectoral Regulator (2nd stage)

To benefit from the existing regulator and secure it as an independent body, one of solutions is to assign a commissioner over the every single regulatory body for oversighting each sector (see in the above figure). Proposed core competency for the new oversighting commissioner are:

- Excellent knowledge of economics and relating laws,
- Experience at least one sector with knowledge of each sectors; and
- Integrity with political and industrial independence.

(c) 3rd Step

On the 3rd step, after several years' operation with the structure of the 2nd step, further reform will be implemented for the regulator: re-structuring departments as function-based as the below diagram shows. Expertise for particular function (i.e. financial modeling, law, technical knowledge for wiring) will be shared over the sectors and then regulatory authority will be operated sustainably with operation efficiency.

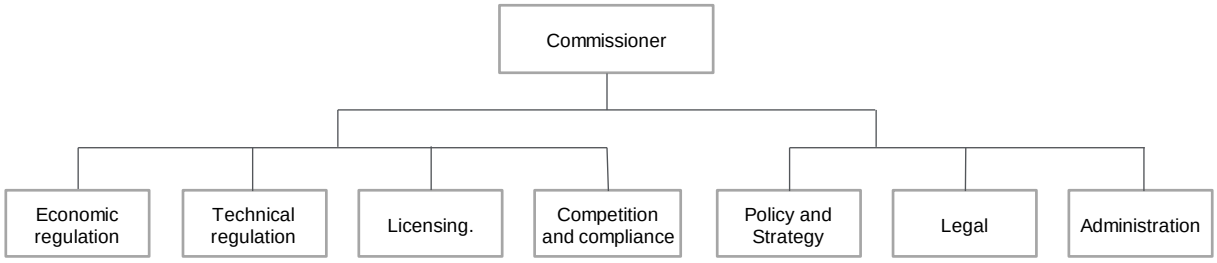

Source: JICA Project Team

Figure 7-21 Proposed Organizational Chart of Multi-sectoral Regulator (3rd stage)

7-9 Activities of Major Donors and International Organization

7-9-1 ODA Trends to the Pacific

Figure 7-22 summarizes the aid trends for the Pacific by development partners (2015 results). In the Pacific, the EU is the largest as a multilateral institution, and the Australian government has the largest amount of support as a bilateral donor. Japan is the fourth largest in an amount after Australia, New Zealand and the United States. Japan's ODA to the Pacific region accumulated USD 3,589.44 million (2007 to 2016). The amount of support provided by the grant is the largest, and among the Pacific countries support to SI is the largest in fiscal 2016.

A remarkable example of the recent support by Government of Japan is the "Hybrid Power Generation System Introduction Project", a technical assistance project for five Pacific countries that have been implemented since 2017. The Pacific Islands Leader Education Support Program (Pacific-LEADS) is ongoing since 2016 that is a program for governments and young private human resources from 14

Pacific island countries. Both projects are supported by JICA. Another support framework is 'The Project for Human Resource Development Scholarship' is taken account of as another support framework although it does not have a track record in the Pacific so far. It is expected to be used in the future for the capacity building for government officials in the energy sector.

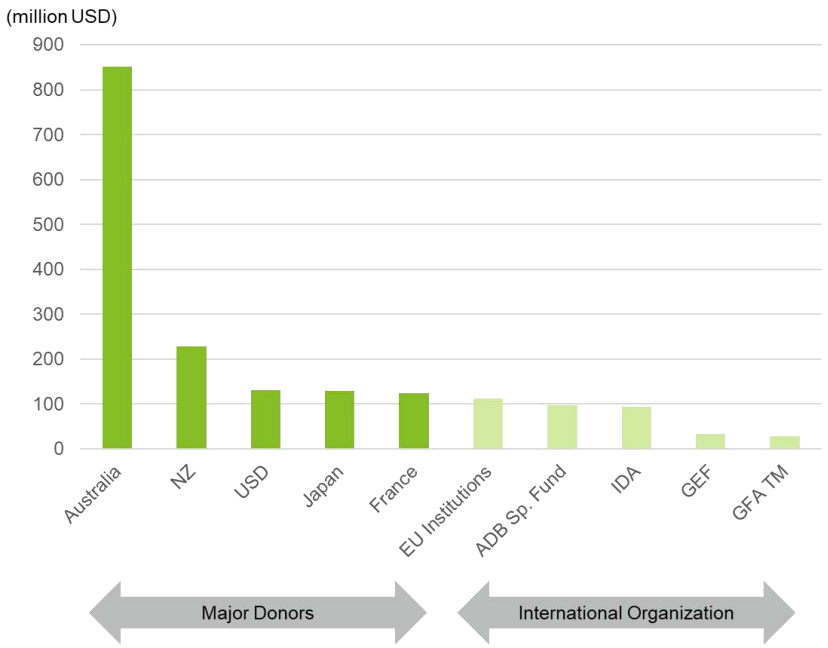

Source: JICA Project Team created from documents released by the Ministry of Foreign Affairs

Figure 7-22 Aid Trends for the Pacific by International Organizations and Major Donors (2015)

Table 7-9 summarizes development supports from development partners that can be expected for renewable energy projects in the Pacific.

Table 7-9 Support Framework for Renewable Energy Projects of Pacific Country

No.	Name of institution	Overview	Remarks
1	MoE (Japan)	Bilateral Credit System (Pacific Country: Palau)	-
2	JICA	Small and medium-sized enterprises and SDGs business support (Basic surveys, project development surveys, dissemination, demonstration, and business development)	Support JPY 8.5 million to JPY 150 million depending on the terms of the project
3	NEDO	International demonstration project of Japanese technology that contributes to the efficiency of energy consumption (Investigation of conformity, pre-demonstration survey, empirical research and follow-up)	The budget for empirical research is less than JPY 4 billion per project x subsidy rate (1/2 of large enterprises, 2/3 of small and medium-sized enterprises)
4	NEDO	Overseas Expansion Potential Survey of Technologies related to Smart Community Demonstration Project	-
5	Global Environment Center (GEC)	FY2019 Co Innovation to Create and Disseminate Low-Carbon Technologies for Developing Countries	-
6	WB	Pacific Risk Insurance, Geothermal Development Plan, etc. in cooperation with private organizations	-
7	ADB	PREP (Pacific Renewable Energy Program) support for guarantees, loans, etc.	An official letter to Tonga renewable energy projects has been issued.
8	Green Climate Fund (GCF)	Support for project formation for climate change countermeasures	The Japanese government contributed USD 1.5 billion
9	Pacific Environmental Community Fund (PEC)	Financial support for renewable energy projects by PEC	The Japanese government contributed USD 6.6 million
10	Climate Technology Center Network (CTCN)	Technical support in the field of climate change (training on technology, policies, strategy development, etc.)	Budget up to USD 250,000 (Grant)

Source: JICA Project Team created from documents released by the Ministry of Foreign Affairs

7-9-2 ODA Trends for Renewable Energy Sector in Solomon Islands

In the power sector in SI, development partners such as WB, ADB, bilateral cooperation and UN agencies are active. In cooperation with MNPDC, a responsible ministry to coordinate with development partners, we gathered information mainly on projects that could overlap or relate to this project through interviews with local offices of each development partner and desk surveys.

Key development partners and initiatives are summarized below. At the end of 2019, a contract for the Tina Hydropower Project, which is supported by multiple development partners, was concluded and went into effect. It is the Australian government will support infrastructure projects in great extent beyond 2020. In addition, the WB's review project for the Electricity Act and tariffs is planned in 2020 and the sector reform in the energy sector are expected to begin.

Table 7-10 International Organizations and Major Donors Project Mapping

	Energy			Infrastructure (Non-Energy)	Capacity Building
	Hydro	Solar PV	Mini-Grid		
Japan (JICA)	Establishment of Renewable Road Map			Honiara airport Rehabilitation, Kukum Highway upgrade	Health, Waste management, Forestry management
WB	Tina Hydro	Fighter one expansion	Rural Electrification, Road map (SIEAREEP*)	Road, Rural Development program part2	Advisory for energy sector, Tariff review
IFC		New PV project (for SP)			
ADB	Tina Hydro	5 sites in rural provinces			Launch of PPP center, Port
Australia	AIFFP			Int'l Tel-com cable	Water Supply
NZ			Mini-Grid	Airport (Munula, Gizo, Sege)	
EU/GIZ		Hybrid project for school (PV+ Battery + DG)		Water Sanitation	Launch training program for renewable engineers, Electoral system

* Solomon Islands Electricity Access and Renewable Energy Expansion Project

Source: JICA Project Team

(1) Government of Japan

The government of Japan has been providing support to SI as a major development partner through grant and technical cooperation. The basic policy is to support the development of economic infrastructure, environmental conservation, and climate change measures based on the support policy of the Pacific Island Summit. Key support projects include improvement and maintenance of Honiara port facility, improvement of Kukum highway, promotion of healthy village, and establishment of a renewable energy Roadmap.

(2) World Bank

The WB is one of the most active development partner in SI. The SIG plans to promote solar PV in the agricultural sector and other sectors in 2019-2021, so there is no projects other than solar PV under the policy.

Ongoing solar PV projects are 2 MW (Henderson extension), 220 kW (Rooftop PV at SP headquarter), and mini-grid (Makira and three other). Besides, in cooperation with the SP and the New Zealand government, WB is promoting the electrification of housing (distributed power supply) in rural areas (including the Honiara grid), but the problem is that it is not profitable without support.

The dispatch of energy advisors to MMERE and the tariff review project was also implemented. The report was originally scheduled to be completed in September 2020, but the entire process was delayed due to the influence of COVID-19, and the project was completed in March 2021. The outline of the report content (Draft Final Time) of the tariff review was described in the next section.

(3) IFC

IFC mainly supports private sector across the world. In SI, they has supported canned Tuna industry so far and is currently interested in supporting large-scale PV project. Rooftop solar PV can be also a candidate project for their support.
IFC has information about private companies that are willing to enter to SI and IFC is willing to provide support.

Sector reform has not been implemented much in the IFC until now, but IFC has indicated that it will also work on reforms with a view to private investment as 'upstream' project, and there is a possibility that efforts will be made in SI and other Pacific countries in the future.

(4) Asian Development Bank

ADB has also provided a wide range of support in several sectors, including transportation, sanitation, and public-private partnerships. For the energy sector, Tina hydro and solar PV projects have been developed. In solar power generation projects, distributed solar PV projects are implemented and it differs from the stand-alone system implemented by WB. The total capacity of projects is 2 MW for 5 projects: 1 MW in Munda and 250 kW in Tulagi; Construction has already started, 320 kW in Kirakira and 290 kW in Lata, 140 kW in Malu'u. The site is scheduled to start operation in the third quarter of 2020. The construction work is being carried out by Fijian contractor (CBS Power Solution). Generation will be purchased by SP.

Besides, the hydro power project at Malaita was cancelled due to the land issue in 2019. After the cut-off date for compulsory acquisition, the case was brought to the High Court by landowners. At the end, it was cancelled because it failed to reach agreement on compensation negotiation. ADB also supported the establishment of PPP units and formulated PPP manuals as technical assistance. The project completed in February 2019 and the ADB is not directly involved for further development of the unit.

The ADB mainly supports public institutions, but the headquarters also has a private investment support department. Financial support is mainly available, but it is also possible to support projects with relatively high risk smaller than private banks. ADB Samoa's PSOD[33] projects also provide support to the private sector. ADB Sydney has a private investment officer (climate change finance) who oversees the Pacific.

(5) The Government of Australia

The Australian government has recently made a new loan framework for the Pacific (AIFFP: Australian Infrastructure Financing Facility for the Pacific[34]). The facility frame is 1.5 billion AUD (Loan) and 500 million AUD (Grant). The transmission project of Tina Hydro for MMERE and SP is the first project of AIFFP. The amount of support for the project is AUD 18.4 million (Grant). AIFFP is capable of lending not only to public institutions but also to private companies. If the Australian government's focus is on the area of focus or partnering with Australian institutions/companies, the private sector is not limited to Australia or SI. However, since it is a government facility, there is a certain criterion. (e.g., check for human trafficking and child labor, etc.)

In support of SI, Australian Prime Minister visited SI in June 2019 and he announced that it will invest AUD 250 million in the infrastructure sector for the next ten years. The target areas will be energy and communication that contribute to economic improvement. In February 2020, the planning team will join SI to conduct interviews with government agencies and officials in SI Ministry to prioritize. Based on the plan set up, a support menu will be created and a loan for SI will be concluded in June/July 2020 after the approval of the Australian government. The amount is estimated to be AUD 32 million (60% loan, 40% grant). The support menu assumes short-term and long-term technical support, investment in infrastructure fields, and support for maintenance of infrastructure facilities. They have close communication with SP about Tina hydro project and also focus on supporting SP.

Besides, they are considering projects such as co-financing to The Kukum Phase2 (JICA), Dina Port (IFC) and human resource development (MMERE) for infrastructure policy. In SI, several large-scale construction projects including stadiums for the Pacific Games 2023 are planned, so the Australian government considers the need of an appropriate building standards. They are considering supporting the formulation of a standards for infrastructure fields, not limited to Building Code. They are also interested in the development of local procurement regulations and industrial human resources.

(6) Government of New Zealand

New Zealand High Commission focuses on airports, tourism, fishing, education and taxation. As for the energy sector, there was a high level of interest in the renewable energy sector, and they are currently working with SIG/SP and WB to implement hybrid (PV+DG) mini-grid projects for four outer islands. They are also working in collaboration with the Australian government on the matter. There is an

[33] Private Sector Development Operation Department https://www.adb.org/site/private-sector-financing/main#contacts
[34] https://www.aiffp.gov.au/

intention to reduce the electric power charge by improving RE proportion in the energy mix. They have cooperated with SP for the Fighter One project and substation projects so far.

NZ government has a track record of supporting Munda airport maintenance. Because there is a high interest in the field of tourism, there is also a high interest in supporting airport facilities with renewable energy. In the tourism field, they are developing Western State and Munda airports. They are also considering cooperation with IFC in the future.

NZ government prioritizes the soft area (e.g., capacity building in the fishing field) as Solomon Water has a staff from their volunteer system. They also understand a need of capacity building for local contractors and they are interested in the technical assistance. They are also working to establish a regulatory authority in the airport sector in SI.

(7) EU/GIZ

In cooperation with MECC and MMERE, they have worked on the Selwyn College project. The capacity of solar power is 160 kW, the battery is 120 kW / 18 kWh and backup DG is 110 kVA / 88 kW. Around 20 kWp electricity is provided to the boarding school.

As a package support with the Selwyn College project, they established a renewable energy engineer training program at SINU. The program has been carried out since January 2020. External lecturers from Australian institutions teach the course in the first year, and from the second year onwards, SINU will need to secure its budget and instructors. For this reason, three instructors were hired from SI and an additional person will be recruited. The external instructors will train SI instructors for energy and electrician knowledge. Australian Pacific Training Coalition (APTC)[35] will also update and improve the program in a partnership with the project. Facility (10 solar PV modules + battery) used in this program was installed with the support of USAID.

7-9-3 Tariff review work funded by the WB

As described in the previous section, the World Bank conducted a tar-review for MMERE and SP. The outline of the examination contents at the time of draft final report (Below, report) is summarized below. (1) Tariff step and (2) change of tariff structure are discussed.

(1) Steps for tariff revision

Due to the change in tariff structure, the classification of customer segments has been changed, and the adoption of the deferred payment system has been abolished. In addition, since the rate increase is expected especially for large users, a gradual transition is proposed. First of all, we set the target tariff structure for the usage category and the transition tariff structure.

(2) Change in tariff structure

(a) Target tariff structure

Under the current tariff structure, customers in the Domestic segment pay higher electricity charges than the marginal cost. In order to create a cost reflexive billing system, it is necessary to reduce tariff in the domestic segment and consolidate some weight categories. Specific measures are assumed as follows:

- ✓ Removed fixed charges for domestic customers
- ✓ Reduce the number of consumption blocks from four to three for domestic customers
- ✓ Consider reclassifying large domestic customers

It also proposes that commercial and industrial customers be billed for capacity per kW to cover all non-fuel costs. This ensures fairness among consumers compared to the current tariff. The following is a summary of the specific measures to be taken.

- ✓ Charge all non-domestic customers a demand charge (per kW)
- ✓ Remove fixed charges for non-domestic customers
- ✓ Remove non-fuel volumetric charges for non-domestic customers

[35] https://www.aptc.edu.au/

- ✓ Remove the distinction between commercial and industrial customers
- ✓ Remove the option for non-domestic customers to choose a prepaid meter
- ✓ Be ready to implement time of use tariffs once Tina River Hydro is commissioned
- ✓ Consider introducing reactive power charges for large customers

Taking the above into consideration, the target tariff structure is set as shown in the following table. As a result, the average non-fuel cost required by the SIEA of 3.31 SBD/kWh is almost secured.

Customer category	Meter type	Consumption block	Fuel cost (SBD/kWh)	Non-fuel cost (SBD/kWh)	Demand charge (SBD/kW/month)
Domestic	Pre- and postpaid	<50kWh	1.92	2.61	NA
		50-200kWh		3.13	NA
		>200kWh		3.65	NA
Commercial. Industrial, Non-Regular	postpaid	All		NA	1429.10
	prepaid	All		3.47	NA

Source: Economic Consulting Associates

Figure 7-23 Recommended Non-Fuel Tariffs by Segment (target targiff)

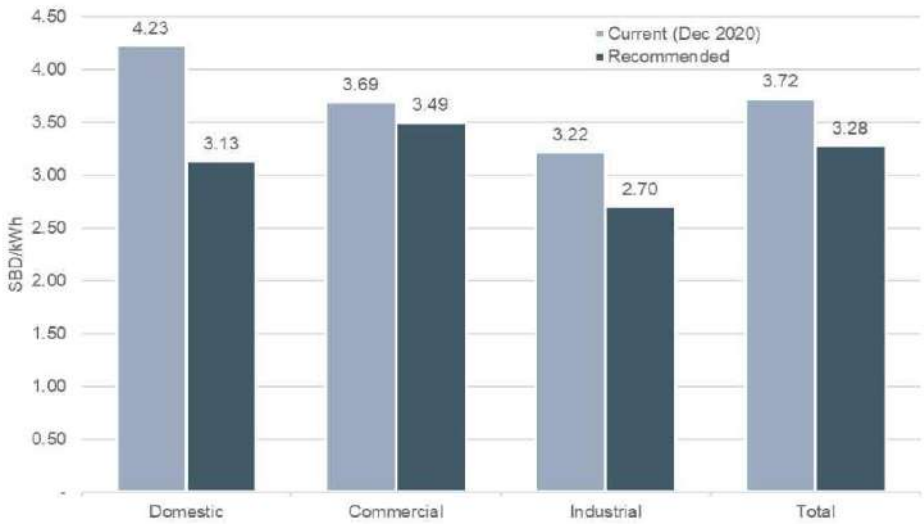

Source: Economic Consulting Associates

Figure 7-24 Recommended average non-fuel tariffs vs current average non-fuel tariffs – target scenario

(b) Transition tariff structure

In the Domestic segment, the same measures as the target tariff structure are expected to be implemented. Besides, in the Commercial and Industrial segments, it is not easy to agree with charging the demand capacity charge, and it takes time to promote it. From this, the following is recommended as a transitional approach.

- ✓ Remove fixed charges for non-domestic customers
- ✓ Remove the decreasing block tariff structure

Because of the high demand capacity charges and high burden rates of the Industrial segment, it is recommended that the Commercial and Industrial segments not be integrated but remain separate. As in the target tariff structure, rates are set not primarily on the basis of service costs, but rather to ensure that rates are lowered for as many segments as possible and that maximum rate reductions are provided to domestic segment customers. The transition tariff structure is also designed to ensure an average non-fuel cost of 3.31 SBD/kWh.

Customer category	Meter type	Consumption block	Network access fixed charge (SBD・Month)	Non-fuel charge (SBD/kWh)	Fuel charge (SBD/kWh)
Domestic	Pre paid	,<50kWh	NA	4.11	1.92
		50-200kWh	NA	4.17	
		200-500kWh	NA	4.20	
		>500kWh	NA	4.81	
	Post paid	,<50kWh	17.44	3.68	
		50-200kWh	58.13	3.76	
		200-500kWh	116.26	3.83	
		>500kWh	232.53	4.33	

Customer category	Meter type	Consumption block	Network access fixed charge (SBD・Month)	Non-fuel charge (SBD/kWh)	Fuel charge (SBD/kWh)
Domestic	Pre- and postpaid	,<50kWh	NA	3.22	1.92
		50-200kWh	NA	3.70	
		>200kWh	NA	4.19	

(a) Tariff for domestic segment

Customer category	Meter type	Consumption block	Network access fixed charge (SBD・Month)	Non-fuel charge (SBD/kWh)	Fuel charge (SBD/kWh)
Commercial	Pre paid	,<250kWh	NA	4.70	1.92
		250-600kWh	NA	4.27	
		600-1300kWh	NA	3.94	
		1300−2500kWh	NA	3.80	
		>2500kWh	NA	3.35	
	Post paid	,<250kWh	58.13	4.40	
		250-600kWh	116.26	3.96	
		600-1300kWh	232.53	3.65	
		1300−2500kWh	465.06	3.28	
		>2500kWh	1743.97	3.12	

Customer category	Meter type	Consumption block	Network access fixed charge (SBD・Month)	Non-fuel charge (SBD/kWh)	Fuel charge (SBD/kWh)
Commercial	Pre- and postpaid	All	NA	3.20	1.92

(b) Tariff for commercialsegment

Customer category	Meter type	Consumption block	Network access fixed charge (SBD・Month)	Non-fuel charge (SBD/kWh)	Fuel charge (SBD/kWh)
Industrial	pre paid	,<1300kWh	NA	4.56	1.92
		1300-6000kWh	NA	4.49	
		>6000kWh	NA	3.28	
	post paid	,<250kWh	116.26	4.04	
		250-600kWh	465.06	3.47	
		600-1300kWh	3487.95	3.09	

Customer category	Meter type	Consumption block	Network access fixed charge (SBD・Month)	Non-fuel charge (SBD/kWh)	Fuel charge (SBD/kWh)
Industrial	Pre- and postpaid	All	NA	3.10	1.92

(c) Tariff for industrial segment

Customer category	Meter type	Consumption block	Network access fixed charge (SBD・Month)	Demand charge (SBD/kW/month)	Fuel charge (SBD/kWh)
Non-regular	post paid	Domestic	116.26	636.79	1.92
		Commercial	465.06	1045.95	
		Industrial	465.06	880.28	

Customer category	Meter type	Consumption block	Network access fixed charge (SBD・Month)	Demand charge (SBD/kW/month)	Fuel charge (SBD/kWh)
Industrial	Pre- and postpaid	All	NA	1429.10	1.92

(d) Tariff for non-regular segment

Source: Economic Consulting Associates

Figure 7-25 Proposed transition from current tariff to transition tariff structure

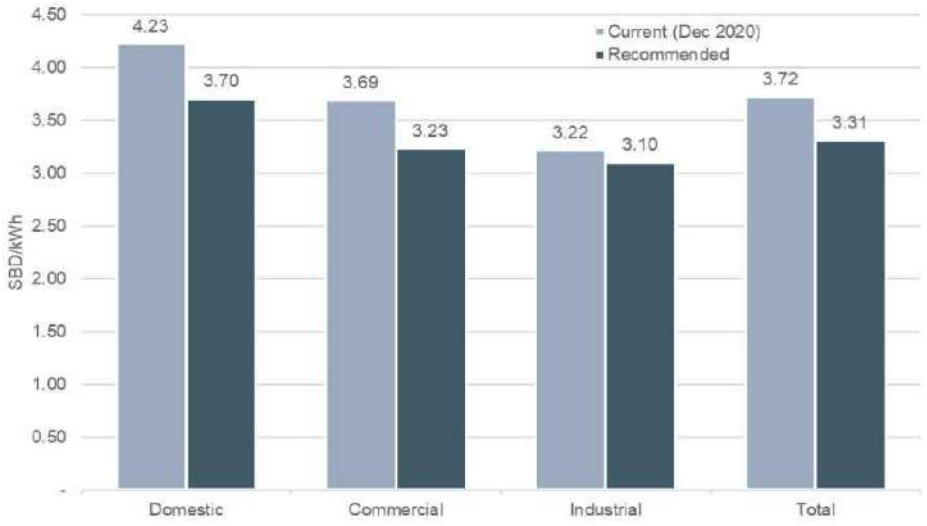

Source: Economic Consulting Associates

Figure 7-26 Recommended average non-fuel tariffs vs current average non-fuel tariffs – transition scenario

Chapter 8 Renewable Energy Road Map

This chapter describes the Renewable Energy Road Map (RERM) formulated in this Project.

8-1 Position of the RERM

In accordance with the policy target of Solomon side, the scenario targeting 100% RE for whole year in 2030 was studied as a recommended scenario. The Solomon side, however, noted that the scenario targeting 100% RE for whole year in 2030 was not feasible due to the impact of COVID-19 on operations and current land availability for building large scale PV facilities. All things considered, scenario 3, which targets 100% RE in 2030 for rainy season only, was recommended as the priority scenario.

The Solomon side and JICA side acknowledged constraints and agreed to select scenario 3 as the priority scenario. Both sides confirmed that the Solomon side would revise relevant national policies accordingly in order to ensure consistency between those policies and the RERM.

8-2 Development of RERM

Figure 8-1 outlines the RERM that have been drafted up. The detail processes to determine the RERM are discussed in the previous chapters. The followings summarize the recommendations from the technical and implementation promotion perspectives.

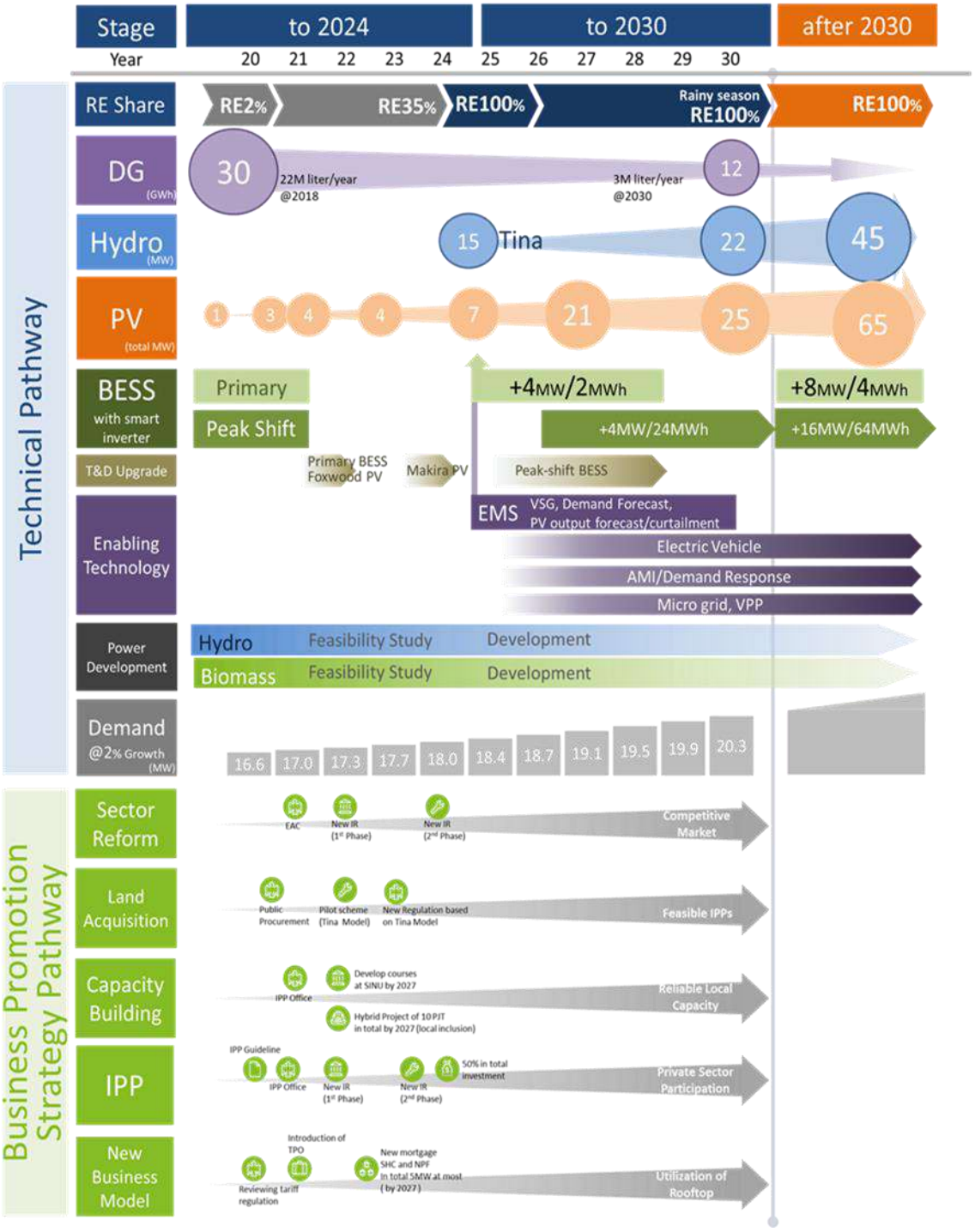

Source: JICA Project Team

Figure 8-1 Outline of Renewable Energy Road Map for Honiara Grid (Draft)

8-2-1 Technical Recommendations for Renewable Energy Expansion

(1) Major Assumptions in Formulating RERM

- The Tina Hydropower, which is currently under development in the Honiara grid, will commence its operation in 2025.
- All PV development currently planned by SP will operate as planned by 202, whose capacity will total up to 7.27 MW in 2025.
- Electricity demand will continue to grow at an annual rate of 2% until 2030.
- As for enabling technology for boosting renewable energy on the demand side, it is assumed that electric vehicle (EV), demand response (DR), and microgrid incorporating distributed energy resources on the demand side may be introduced after 2025. However, at the present time, no specific policy has been established regarding the introduction of new technologies on the demand side and the transportation sector. As a result, there is not enough information available to factor it into the RERM scenario. Therefore, these demand-side enabling technologies will not be reflected in the electricity demand forecast by 2030.

(2) Findings and Recommendations

<u>By 2030</u>

- Diesel generators in the Honiara grid currently has a usable capacity of 29.6 MW in total. However, thanks to renewable power development such as PV and Tina Hydropower, the capacity operated by diesel can be reduced to 12 MW and fuel usage can lower by around one seventh by 2030.
- In addition to the planned 21.27 MW PV, a total of 4MW of PV will be introduced after 2028.
- In 2025, BESS 4MW / 2MWh for securing spinning reserve will come along with EMS, which is recommended to have functions: demand forecast, economic dispatching control (EDC), PV output forecast and control, BESS charging/discharging control, BESS SOC (State of Charge) estimation and management, and virtual synchronous generator (VSG).
- The required operation of the Honiara grid will change due to the increase in PV installation and the introduction of Tina hydropower. Along with this, the functions required for EMS will also change.
  - By 2021, the PV introduction amount is 4.27 MW, which is smaller than the expected demand of 2021 of 17 MW. Of the DGs currently installed at the Lungga Power House, four units newly introduced in 2016 can operate at sufficiently low output. Therefore, it is sufficient if PV output control and DG operation control can be performed. The EMS functions required for that purpose are demand forecasting, PV output forecasting, and DG economic load distribution operation functions.
  - When PV capacity reaches 25.27 MW in 2030, PV output will exceed demand during off-peak daytime. At this time, in addition to the above functions, PV output control function, BESS charging/discharging control and SOC estimation/management function are required as spinning reserve control. In addition, a function to control BESS is required to maintain the system voltage and frequency. This includes VSG that performs autonomous operation and supplies fault current that simulates the inertial force of a generator.
  - After 2025, the Tina Hydropower will be put into operation and will require further EDC functions. With this EDC function, supply and demand operation is expected in consideration of further PV output control in the rainy season, hydroelectric power generation capacity in the dry season, and BESS control.
- A total of 4 MW / 24 MWh of BESS for peak shift will be introduced to ensure effective use of surplus electricity and to secure peak supply capacity at night
- Concept of transmission reinforcement for PV and BESS development is as follow:
  - Transmission system should be basically planned to keep the PV connection amount per circuit to 4 MW or less in consideration of transmission line overload and system frequency stabilization.
  - When the PV connection amount per circuit exceeds 4 MW, new transmission lines and

additional transformers at substations are necessary to be planned.

- Since the BESS for spinning reserve contributes to stabilization of the system frequency and contributes to the entire system, it is recommended to connect to the 33 kV bus in a highly reliable substation with an exclusive line, of which voltage is used for interconnection between substations in Honiara grid system.
- It is desirable to install PV and peak shift BESS after 2025 in a decentralized place instead of concentrating them in one place in consideration of the failure of each equipment or power system accidents.
- It is recommended that the BESS for peak shift is installed near the substation where each PV of charging target is connected. And the BESS should be connected with an exclusive transmission line to the substation. This is to reduce the transmission loss and to suppress the reinforcement work of 33kV system which is the interconnection between the grid substations.

- With above measures, RE100% power supply in rainy season will be achieved as of 2030.
- To achieve 100% renewable energy throughout the year with PV plus BESS by 2030, PV capacity totaled at 45.27 MW is required, which means that 20 MW is further needed in addition to the SP's current plan. Land acquisition for the capacity is also necessary. As for BESS capacity, 8 MW / 4 MWh for spinning reserve and 15 MW / 90 MWh for peak shift are required in total.
- It is recommended to update the potential survey and feasibility study of renewable power sources (new hydropower potential sites and biomass) other than PV and Tina hydropower to achieve 100% renewable energy supply throughout the year. In particular, it takes a lot of time to investigate hydropower, so it is desired to start the investigation for new hydropower sites as soon as possible. In addition, it is recommended to incorporate the power source whose feasibility has been confirmed into the development plan and aim to achieve RE100% throughout a year.

<u>By 2040</u>

- According to SP, it will be difficult to secure a large-scale PV land by 2030 that can achieve 100% renewable energy supply throughout the year. In addition, as a result of the above-mentioned potential survey of new renewable energy sources (new hydropower and biomass), there is a possibility that a desirable power source candidate may not be found. Taking these into consideration, we assumed a large-scale PV site could be acquired by 2040, and examined a scenario in which 100% renewable energy supply is achieved by PV+BESS.
- Assumption as to demand is that 2%/year demand growth would continue by 2040, and the maximum demand in 2040 would reach at 24.7 MW and the energy demand will be 138 GWh/year.
- Assuming the introduction of DR would be progressing, 20 kW × 20 pump facilities of Solomon Water, which is a water supply utility in SI, would be incorporated into the microgrid which the EMS would centrally control. As a result, 0.7 MW, which is approximately one-third of the pump capacity, could be reduced during peak hours at night.
- Under this assumption, a total PV capacity of 64.97 MW can be required. Of these, 59.97 MW is for large-scale PV, and 5 MW is expected for small- and medium-scale PV.
- Based on the above assumptions, large-scale PV needs 34.7 MW in addition to 25.27 MW that is included in the recommended scenario by 2030.
- For small- and medium-scale PV, it is assumed that a total of 5 MW rooftop solar would be installed in 3,500 new houses by Solomon Housing.
- BESS requires 8 MW / 4 MWh for spinning reserve and 16 MW / 96 MWh for peak shift in total.

(3) JICA support for the introduction of EMS and BESS

By 2025, BESS for short-period fluctuation control (frequency control) of two 2MW / 1MWh (0.5h) units are required, and a conceptual design (refer 5.13) was conducted in this project. However, prior to its introduction, it is necessary to analyze the fluctuation amount by measuring the fluctuation of demand and PV output with a value of about 1 to 10 seconds by feasibility study (FS). The required performance and capacity of the storage battery must be determined to take the duty cycle (charge/discharge pattern) from the viewpoint of scrutinizing the required amount into consideration, with limited installation space, and the financial due to the life.

As mentioned above, it is expected that a feasibility study (FS) for introduction of BESS for short-period fluctuation control (frequency control) will be conducted as a JICA's preparatory survey to examine more detailed specifications for the implementation after the conceptual design, and then the EMS and BESS will be introduced through Japan's grant aid.

(4) Necessity of Capacity Building for Stable System Operation with 100% Renewable Energy Supply

In 2028, the installed PV output will exceed the power demand during off-peak daytime. When considering maximizing the use of PV power generation, it is assumed that PV will be the only power supply without operating the DG. The virtual synchronous generator (VSG) function by EMS and BESS can contribute to the stable operation of a 100% renewable energy power system. However, in the event of EMS or BESS failure, operators need to restore the system. Therefore, it is necessary for the operator to be familiar with the system operation centering on renewable energy and the functions and operating methods of EMS and BESS.

First of all, technical transfer should need on the power supply and the method of supplying the spinning reserve by DG to cope with the fluctuation of PV output. The minimum output of the four 2.5 MW generators that have already been installed at the Lungga Power House is 0.2 MW, which allows to operate with an output smaller than the normal DG. Operation control is required for power supply by the DG to absorb PV output fluctuations and for spinning reserve supply. For the DG operation control, it is necessary to formulate and control the economic dispatching control (EDC) operation plan for DG and BESS based on the demand forecast and PV output forecast.

Currently, the DG of the Honiara grid is operated in a pattern that repeats the similar starting and stopping every day based on the experience of operators. The introduction of EDC is expected to improve the operating efficiency of DG. When introducing EDC, it is necessary to educate operators on demand forecasting and PV output forecasting methods.

For the next step, when introducing EMS and BESS, it is necessary to understand the virtual synchronous generator function and grid restoration operation in the event of an accident.

From the above, it is desirable to provide:

- Technical transfer for capacity building to operate 100% renewable energy grid, and
- Financial assistance to introduce EMS and BESS.

(5) Investigation and Update for Renewable Energy Potentials

As mentioned in (2), it is recommended to put renewable energy power sources other than PV into the Honiara grid in the medium to long term. However, at this time, there is not enough research and examination for renewable energy resources that have a possibility to be implemented, and review of past potential research. Therefore, it is necessary to investigate and update renewable energy potentials, which will allow to reflect a newly possible renewable energy source in the roadmap and power development plan.

Regarding hydropower potential, as described in 2-5-1, SI has been expected to have the good hydropower potential since 1960s due to its abundant precipitation and mountainous landforms. On Guadalcanal Island, where the Honiara grid is located, hydropower potential surveys have been conducted since the 1960s. As a result, a total potential of 240 MW has been confirmed. However, since the "Solomon Islands Long-term Power Development Master Plan Survey" conducted by JICA in 2001, hydropower potentials other than Tina Hydropower have not been reviewed or updated. Therefore, it is difficult to select hydropower sites that are promising for development following Tina Hydropower. In addition, as the amount of PV increases to aim for 100% renewable energy supply, it is getting more important to introduce equipment such as BESS that has a storage capacity. In terms of hydro power, a reservoir type or a pumped storage type hydropower plants can function as electricity storage capacity, and then such type of hydropower plants are getting more useful just like BESS. However, most of the hydropower potentials that have been confirmed in the past are the run-of-river type, which has poor

storage capacity.

On the other hand, for biomass, wind power, and geothermal, a full-scale potential survey has not yet been conducted, and no research projects for practical use have been confirmed so far. For biomass power generation, the cost of power generation varies greatly depending on not only the amount of biofuel produced but also the method of collecting and integrating the fuel. Therefore, a study including examination of a power generation model that can be realized in the Honiara region is necessary to accurately estimate its potential.

Based on the above consideration, the following technical assistance by JICA is expected to contribute to the realization of 100% renewable energy after 2030.

- Systematic surveys and reviews on hydropower potentials including reservoir-type and pumped storage type in Guadalcanal Island
- Formulation of hydropower development plan and prioritization of hydropower potential sites
- Study of feasible biomass power generation and preparation of its potential map
- Collection of basic data on wind and geothermal and formulation of potential survey plan
- Technical transfer to relevant organizations in SI including MMERE and SP through the above technical cooperation

These technical support will contribute to the planning of the optimal energy mix based on various renewable energy resource potentials other than PV.

8-2-2 Enabling Private Sector Participation

There are five main items for implementation promotion for the RERM. The SIG and SP would pursue the RERM in collaboration with development partners.

(1) Energy Sector Reform

- With the National Energy Policy approved at the end of 2019, the EAC and its umbrella TWG will be set up in 2021-2022. This will temporarily return the regulator function to the government. This temporary measure will be included in the amendment to the Electricity Act on a time-bound basis. The EAC and TWG will also develop a plan for the SICCC.
- At the beginning of 2023, a new electricity regulator will be established in parallel relationship with TCSI, and a new multi-sectoral model of independent regulator will be set up with a commissioner at the top who will unite the two regulators. In doing so, all regulatory functions previously transferred to the EAC will be transferred to the new regulator. The relevant legislation will be the SICCC Act (tentative name), which will define the functions of the regulator.
- In 2024~25, the regulatory authority will be reorganized. The former sectoral divisions will be reorganized into functional divisions to improve the efficiency and smoothness of SICCC's organizational operations and to promote the introduction of renewable energy after Tina is operational.

(2) Land Acquisition Issues

- In 2021, a public notice on land acquisition will be issued using the media (mainly local newspapers) to strengthen SP's solar pipeline build-up.
- At the beginning of 2023, MMERE and MLHS will formulate a new scheme to recognize renewable energy projects, including IPPs, as national projects. The newly established IPP Office will be in charge of this matter. In addition, a pilot project of the Tina model will be implemented during this period.

- After 2024, the Tina model, which has been finalized through pilot projects, will be established as a regular scheme. At this time, the current Land and Title Act will be revised to further promote the introduction of solar power.

(3) Capacity Building

- An IPP office will be established in 2021-22 directly under the MMERE Director of Energy, which will be led by a centralized private investor contact under the leadership of the Government. The IPP Office will utilize the knowledge and human resources accumulated through the PMO of Tina Hydropower, as well as the development of new human resources to manage the IPP Office.
- New courses on hydropower operation, PV O&M, battery and EMS O&M, grid optimization, and grid planning will be offered and implemented at SINU from 2022. However, appropriate technical and financial support from donors is expected for the courses.
- From 2022 onwards, the hybrid projects implemented at Selwyn College will be horizontally deployed in the USSR (10 projects). At this time, the MoE and MMERE, including OPMC, will strengthen their collaboration and actively recruit Soviet engineers (especially those with a diploma from SINU), aiming for in-house production in the country from system design to construction.

(4) Introduction of IPP

- In 2021, the IPP guidelines developed through this project, together with the RERM, will be approved by the government and made available to the public.
- From 2021 onwards, private investors will start investing in projects that will be released in the pipeline. The establishment of the IPP Office in 2021-22 and the SICCC in 2023 will create a framework that will facilitate private sector participation in the market. Initially, it is expected that the project will be co-financed by SPs, with SPs as the main investor and private investors as minor investors. As for the pipeline to be disclosed here, it is assumed that the status of land acquisition will also be disclosed.
- In 2024, the regulator will be restructured, and under the leadership of the IPP office, the facilitation of investors to various parties and the licensing of power generation will be improved to be smooth and transparent, so that private investors will gradually become the main players in the power generation business in the Honiara system. SP, as a state-owned enterprise, will be able to focus on power transmission and distribution and electrification of unelectrified areas.

(5) New Business Model

- Following the Electricity Act of 2021 and the Electricity Tariff Review Project, it will be decided to abolish the standby charge and establish a surplus purchase system (net metering).
- In 2022, TPO operators will begin to enter the market, targeting the roofs of public sturdy buildings such as government offices and city councils. However, due to the limited number of buildings such as government buildings, and the need to scrutinize whether they meet the load-bearing design and other requirements, the capacity may be less than 1 MW at most. For this reason, this capacity has not been included in the solar capacity of the development scenario at this time.
- Around 2023~2024, NPF will launch a new mortgage scheme and Solomon Housing Company will launch a scheme to sell solar equipment and houses. This is expected to generate about 5 MW of roof-mounted solar power. Since the use of Soviet engineers trained in capacity building is key, the government will establish a subsidy scheme in collaboration with capacity building (e.g., inclusion in capacity building courses).
-

(6) Development Assistance Plan by Development Partners

- (WB) In 2021, a review works for Electricity Act completed.
- (Aus) After 2021, AIFFP will fully function.