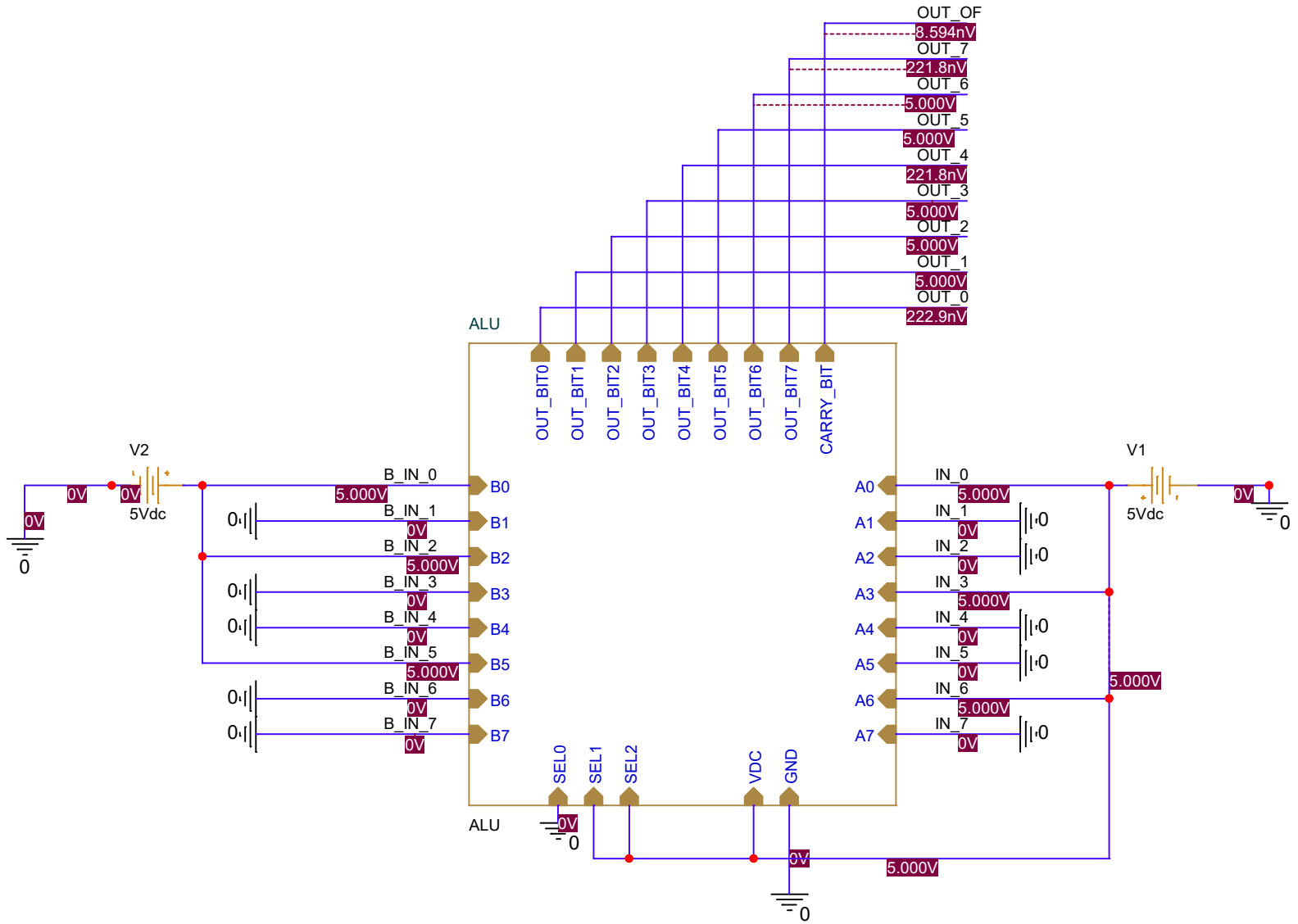

Title	ADD 37, 73	
Size A	Document Number <Doc>	Rev <RevCo
Date: Friday, December 02, 2022	Sheet 1 of 1	