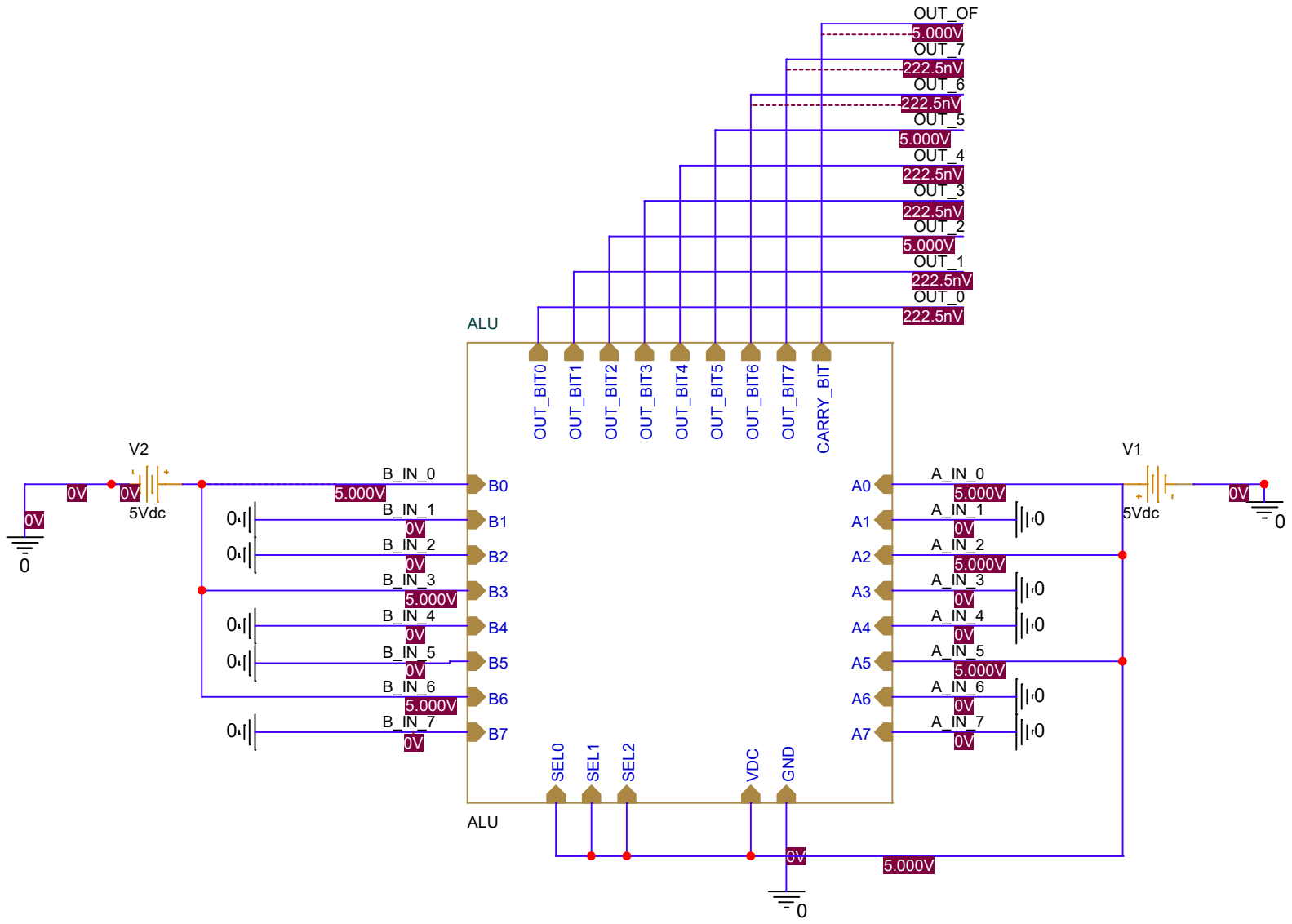

Title	SUB 73, 37	
Size A	Document Number <Doc>	Rev <RevCo
Date: Monday, December 05, 2022	Sheet 1 of 1	