Programming Header (ISP)

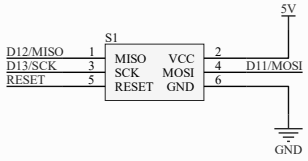

FTDI (USB Comunication)

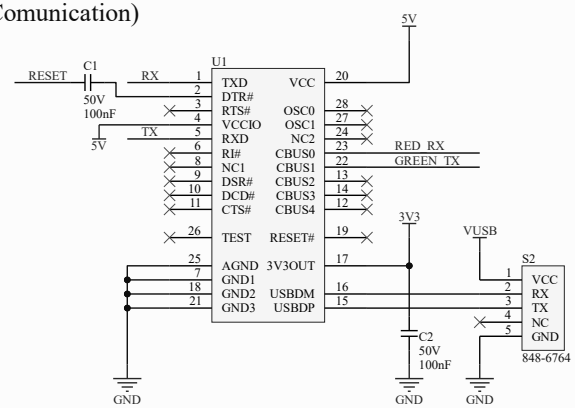

LED Indicators

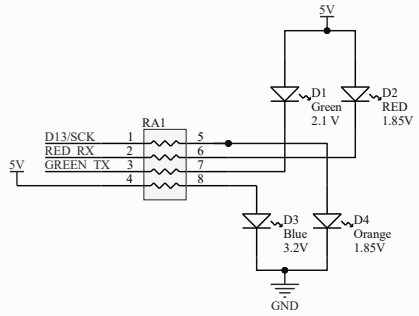

Voltage Regulator

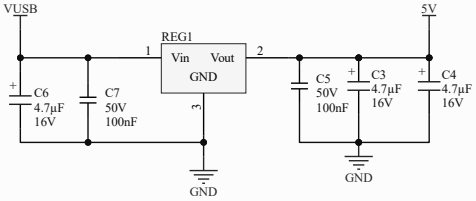

AVR Microcontroller

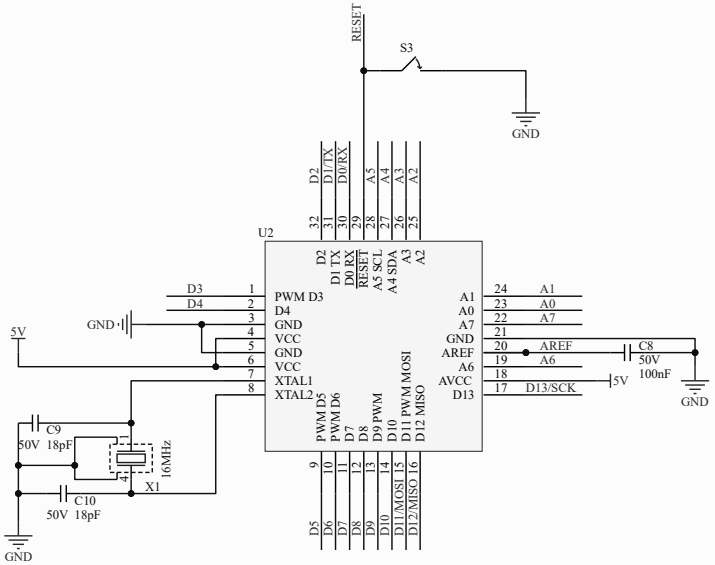

Resistor Array

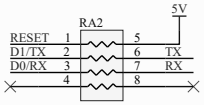

Headers

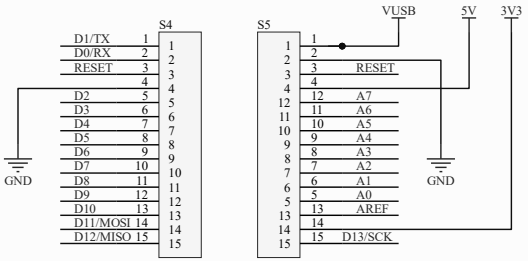

Title *			
Size: A3	Number:*	Revision:*	
Date: 3/12/2021	Time: 11:25:26 PM	Sheet * of *	
File: C:\Users\rajiv\OneDrive\Workspaces\altium-workspace\arduino-nano\arduino-nano\arduino-nano.SchDoc			