*Let the mind manage the body*
*Que l'esprit gère le corps*

**Index Number: .....**

# NATIONAL CERTIFICATE OF EDUCATION

2025

# PHYSICS (N530)

**TIME: 45 MINUTES**

Candidates answer on the Question Paper.
Additional Materials: Mathematical set, Calculator

**READ THESE INSTRUCTIONS FIRST**

1. Write your index number in the space provided above.
2. Write in dark blue or black ink. Do not use correction fluid.
3. You may use a soft pencil for any diagram, graph or rough working.
4. Diagrams are not drawn to scale unless otherwise specified.
5. Any rough working should be done in this booklet.
6. Answer **ALL** questions.
7. This document consists of **6** questions printed on **12** pages, numbered **2** to **13**.
8. The total marks for each question is shown in brackets ( ) at the beginning of each question.
9. The number of marks for each part question is shown in brackets [ ].
10. The total number of marks for this paper is **50**.

| For Examiners' use | | | | | | | | |
|---|---|---|---|---|---|---|---|---|
| **Question No.** | **1** | **2** | **3** | **4** | **5** | **6** | **Total** | **Signature** |
| **Examiner** | | | | | | | | |
| **Team Leader** | | | | | | | | |
| **CE/ACE** | | | | | | | | |

© Mauritius Examinations Syndicate

Marks

## Question 1 (10 marks)

(a) Which physical quantity is measured using a balance?

**A** Diameter

**B** Length

**C** Mass

**D** Temperature

(b) Which of the following circuit diagrams shows a closed electric circuit?

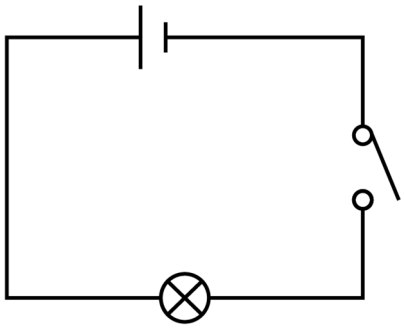

**A**

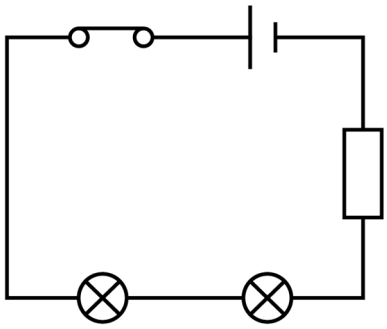

**B**

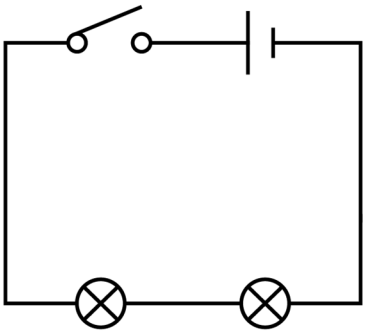

**C**

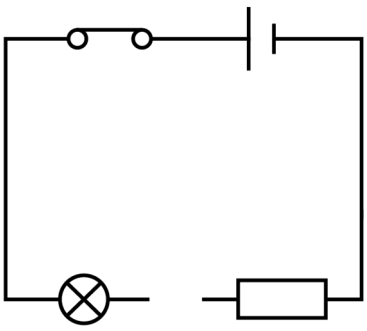

**D**

Marks

(c) Fig. 1.1 shows some liquid in a measuring cylinder.

Circle the letter which shows where the line of sight should be aligned for an accurate measurement.

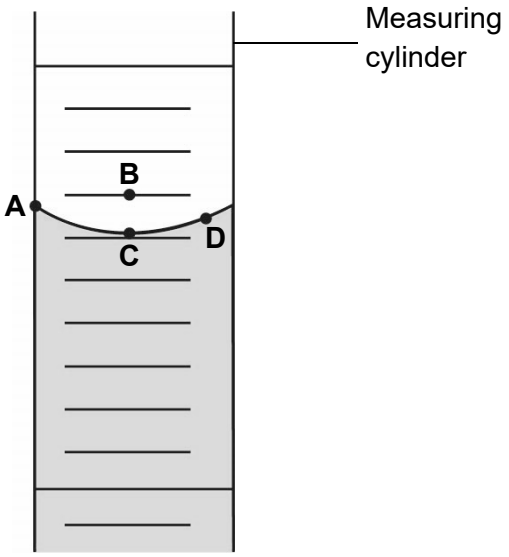


**Fig. 1.1**

(d) Fig. 1.2 shows the reflection of a ray of light by a plane mirror.

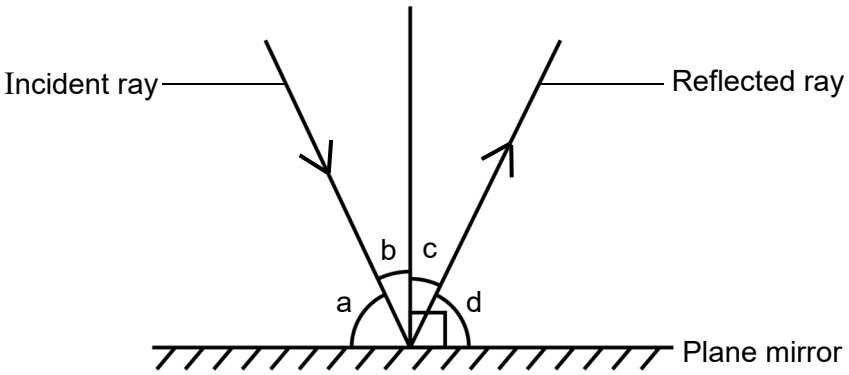


**Fig. 1.2**

Which pair of angles are equal?

**A** b and c

**B** b and d

**C** a and b

**D** a and c

Marks

(e) Which of the following is the **most reasonable** estimate of the height of a pupil's school desk?

**A** 0.08 cm

**B** 0.8 cm

**C** 8 cm

**D** 80 cm

(f) Which of the following is luminous?

**A** Gold

**B** Moon

**C** Rock

**D** Sun

(g) Fig. 1.3 shows the motion of an object for a period of 10 s.

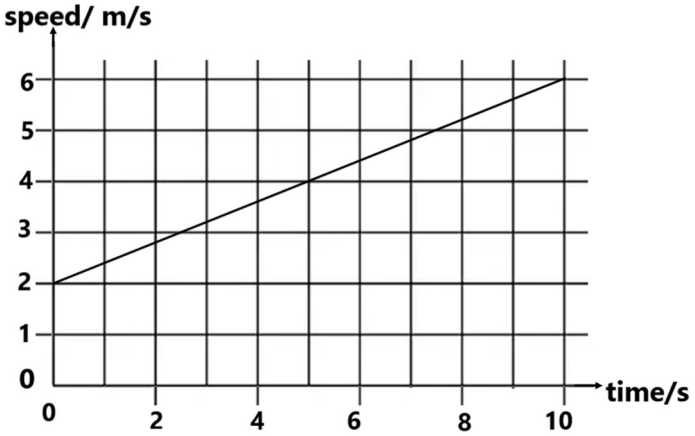


**Fig. 1.3**

What is the speed of the object at 5 s?

**A** 7.5 m/s

**B** 4.0 m/s

**C** 2.5 m/s

**D** 0.0 m/s

Marks

(h) A car increases its speed from 20 m/s to 60 m/s in 5 s.

What is the acceleration of the car?

**A** 4 $m/s^2$

**B** 8 $m/s^2$

**C** 12 $m/s^2$

**D** 16 $m/s^2$

(i) What is the energy transformation that takes place in a thermal power station?

**A** Chemical energy → Heat energy → Kinetic energy → Electrical energy

**B** Heat energy → Chemical energy → Kinetic energy → Electrical energy

**C** Electrical energy → Kinetic energy → Heat energy → Chemical energy

**D** Kinetic energy → Heat energy → Chemical energy → Electrical energy

(j) What is the unit of resistance?

**A** coulomb (C)

**B** joule (J)

**C** ohm (Ω)

**D** volt (V)

E

TL

CE

Marks

## Question 2 (7 marks)

(a) Define the time period of a simple pendulum.

……

…… [1]

(b) Fig. 2.1 shows a stopwatch.

(i) What is the time shown on the stopwatch, in seconds?

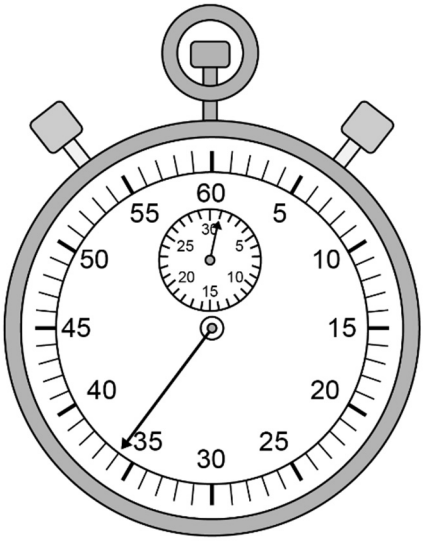


**Fig. 2.1**

Time = …….. s [3]

(ii) The time shown in Fig. 2.1 is the time taken for a simple pendulum to make 30 complete swings.

Calculate the time period of the pendulum.

Time period = …….. s [2]

(iii) Give one precaution that should be taken when using the stopwatch.

…… [1]

E

TL

CE

Marks

## Question 3 (5 marks)

A girl stands in front of a plane mirror at a distance of 120 cm. A photo frame hangs on a wall 210 cm behind her, as shown in Fig. 3.1.

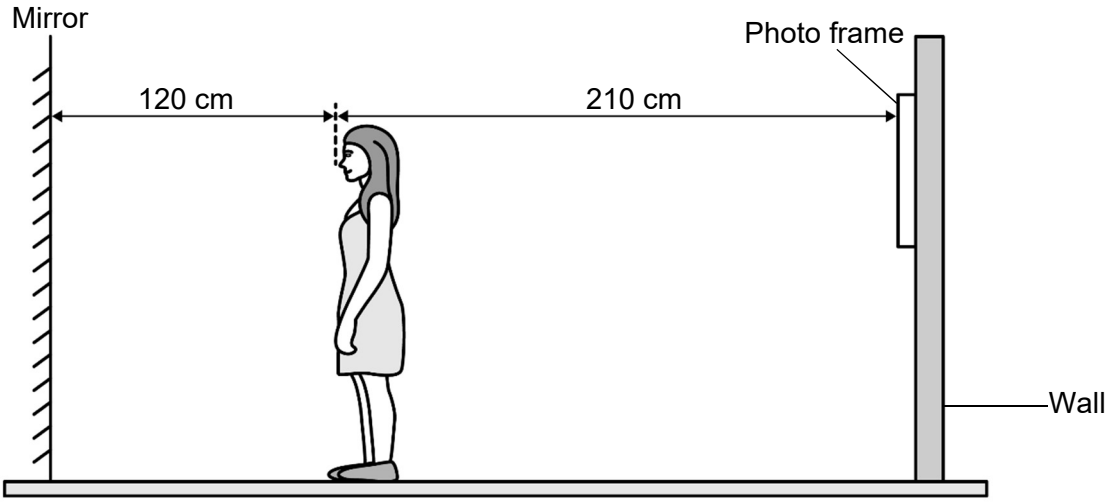


**Fig. 3.1**

(a) The girl raises her right arm.

Explain why her left arm appears to be raised in the mirror.

…… [1]

(b) Give **two** other characteristics of an image formed in a plane mirror.

1. ……

2. ……

[2]

(c) What is the distance between the girl and the image of the photo frame she sees in the mirror?

Distance = …….. cm [2]

E
TL
CE

Marks

## Question 4 (13 marks)

(a) Table 4.1 lists some sources of energy.

(i) Put a tick (✓) beside all the **non-renewable** sources of energy in Table 4.1.

**Table 4.1**

| Energy sources | Non-renewable (✓) |
|---|---|
| Diesel | |
| Wind | |
| Sun | |
| Coal | |

[2]

(ii) Give one advantage of using renewable sources of energy to produce electricity.

…….. [1]

(b) Match each statement in **Column A** to its corresponding form of energy in **Column B**.

| Column A | | Column B |
|---|---|---|
| Energy due to motion | ● | ● Potential energy |
| Energy produced by a vibrating guitar string | ● | ● Light energy |
| Energy stored in a compressed spring | ● | ● Heat energy |
| Energy that enables us to see | ● | ● Kinetic energy |
| | | ● Sound energy |

[4]

Marks

(c) Which **two** physical quantities listed below are required to calculate gravitational potential energy? Tick (✓) the correct boxes.

☐ Mass

☐ Speed

☐ Time

☐ Height

[2]

(d) (i) Fig. 4.1 shows four identical empty bags **W**, **X**, **Y** and **Z** placed on a rack in a classroom.

Which of the bags **W**, **X**, **Y** or **Z** has maximum gravitational potential energy?

…… [1]

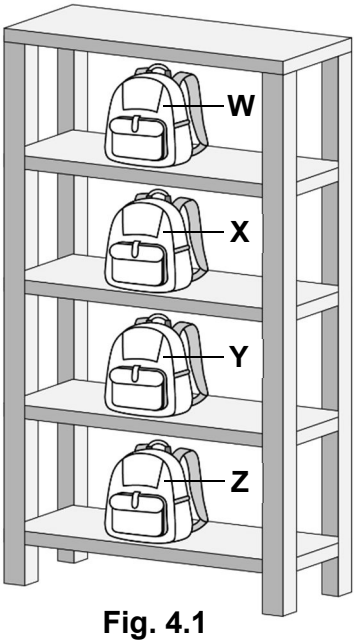


**Fig. 4.1**

(ii) Tick (✓) the correct boxes.

What happens to the gravitational potential energy (GPE) of bag **Y** when it is moved and placed next to bag **X**?

☐ It increases. ☐ It remains unchanged. ☐ It decreases.

[1]

(iii) Give a reason for your answer in part (d)(ii).

…… [1]

(iv) Bag **W** falls on the ground.

What is the value of its gravitational potential energy (GPE) when it is on the ground? …… J [1]

E

TL

CE

Marks

## Question 5 (7 marks)

Fig. 5.1 shows the motion of a car during a given period of time.

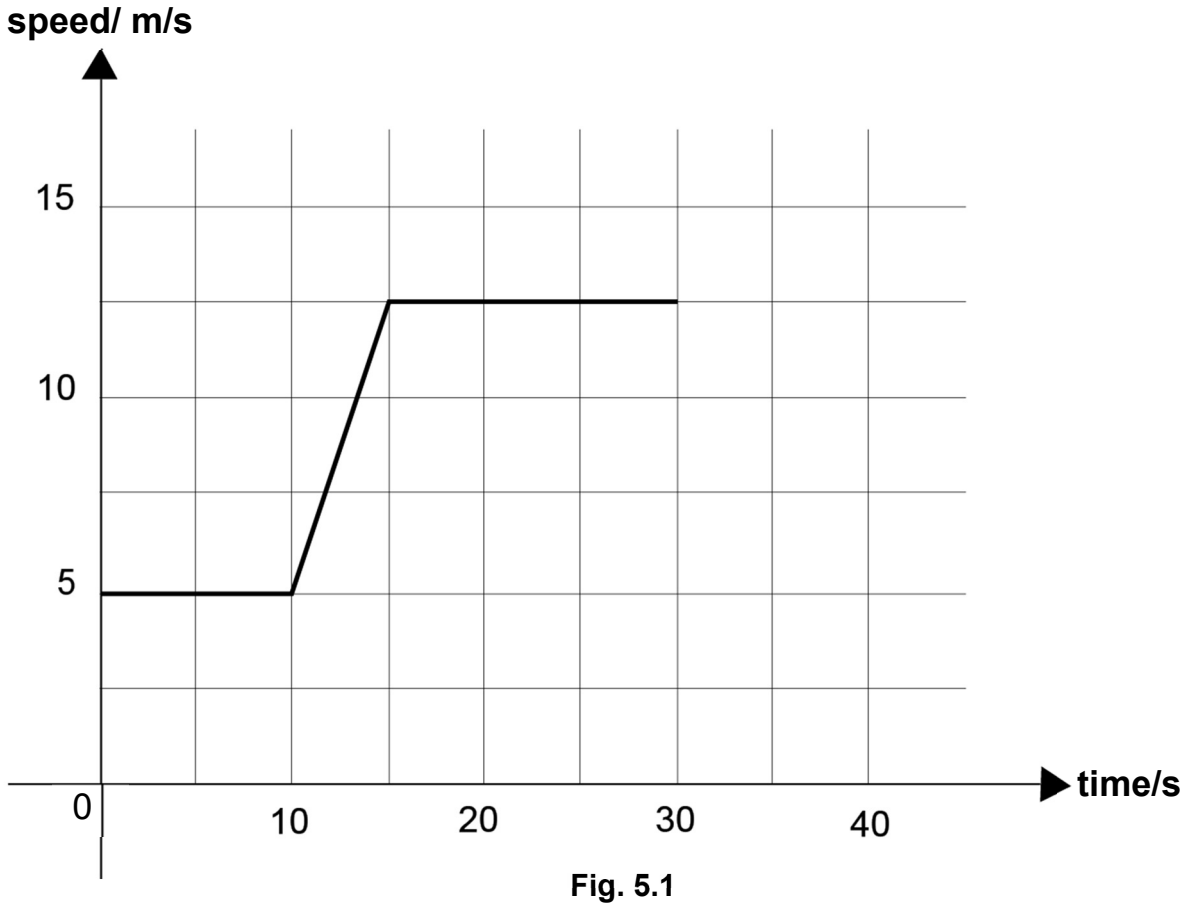


**Fig. 5.1**

(a) At what time does the car start to accelerate?

Time = …….. s [1]

(b) For how long does the car accelerate?

Time = …….. s [1]

Marks

(c) After 30 s, the car decelerates uniformly to rest in the next 5 s. Show this motion on the graph. [2]

(d) For how long does the car move at constant speed during its journey?

Time = …….. s [2]

(e) What is the maximum speed reached by the car during its journey?

Speed = …….. m/s [1]

E

TL

CE

Marks

## Question 6 (8 marks)

(a) Tick (✓) the circuit diagram showing the correct direction of the conventional current, I and the flow of electrons, e.

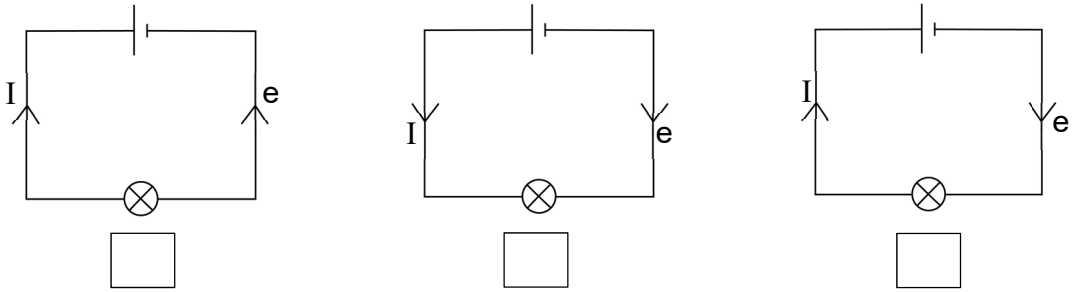


[1]

(b) A student sets up an electric circuit as shown in Fig. 6.1 to determine the resistance of a lamp.

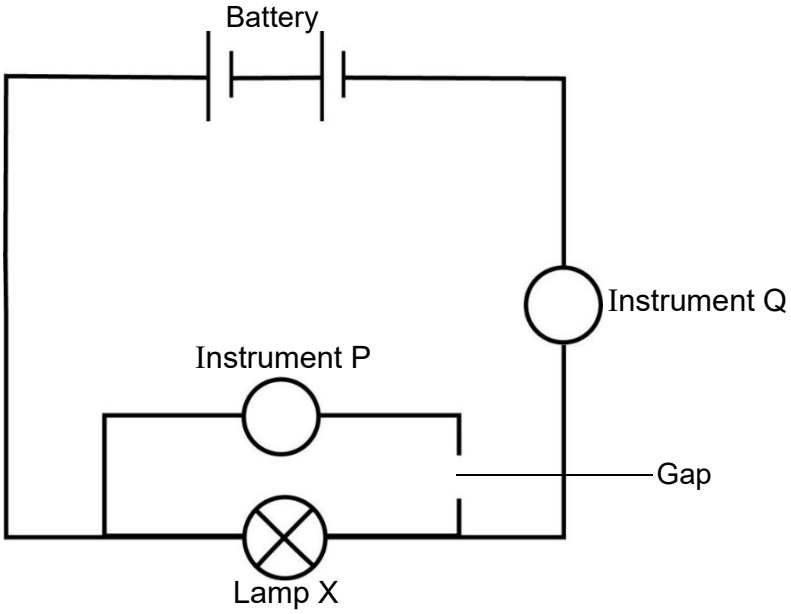


**Fig. 6.1**

(i) What is the function of the battery in the circuit?

…… [1]

(ii) P and Q are two measuring instruments.

Identify and name each instrument.

P: …… [1]

Q: …… [1]

Marks

(iii) Which physical quantity does instrument Q measure?

……. [1]

(iv) Will lamp X in Fig. 6.1 light up? Explain why.

…….

……. [1]

(c) In a given circuit, a current of 3 A flows in a resistor.
Calculate the amount of charge that flows in the resistor in 2 s.
Show all your workings.

Amount of charge = …….. C [2]

**END OF PAPER**

E

TL

CE

**BLANK PAGE**

**BLANK PAGE**

**BLANK PAGE**