Let the mind manage the body
Que l'esprit gère le corps

Index Number: .....

NATIONAL CERTIFICATE OF EDUCATION

2025

CHEMISTRY (N530)

TIME: 45 MINUTES

Candidates answer on the Question Paper.
Additional Material: Ruler, Calculator

READ THESE INSTRUCTIONS FIRST

1. Write your index number in the space provided above.
2. Write in dark blue or black ink. Do not use correction fluid.
3. You may use a soft pencil for any diagram, graph or rough working.
4. Diagrams are not drawn to scale unless otherwise specified.
5. Any rough working should be done in this booklet.
6. Answer **ALL** questions.
7. This document consists of **5** questions printed on **12** pages, numbered **2** to **13**.
8. A copy of the Periodic Table is provided on page **14.**
9. The total number of marks for this paper is **50**.

For Examiners' use							
Question No.	**1**	**2**	**3**	**4**	**5**	**Total**	**Signature**
Examiner							
Team Leader							
CE/ACE							

© Mauritius Examinations Syndicate

Marks

Question 1 (10 marks)

Circle the correct answer. Each item carries one mark.

(a) Which one of the following elements is a diatomic molecule?

A Carbon

B Nitrogen

C Sulfur

D Zinc

(b) Which one of the following compounds consists of **three different elements**?

A K_2O

B $MgCl_2$

C $NaHCO_3$

D Na_2CO_3

(c) Metal X reacts with hydrochloric acid to form a chloride, XCl_2.
What is the formula of the hydroxide of X?

A $X(OH)_2$

B XOH_2

C X_2OH

D XOH

Marks

(d) For which radical is the given valency correct?

	Radical	Formula	Valency
A	Carbonate	CO_3	1
B	Ammonium	NH_4	2
C	Hydroxide	OH	1
D	Nitrate	NO_3	2

(e) Which gas undergoes a chemical change when a catalytic converter is used in the exhaust system of a petrol-powered car?

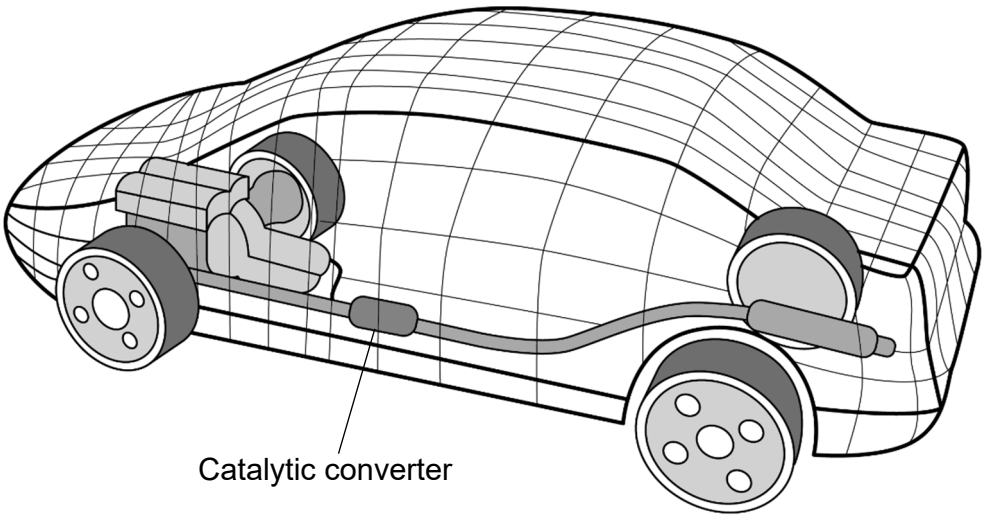

Fig. 1.1

A Carbon monoxide

B Oxygen

C Nitrogen

D Water vapour

Marks

(f) Four metals are given below.

Which metal reacts **most vigorously** when placed in water?

A Calcium

B Iron

C Magnesium

D Zinc

(g) **Fig. 1.2** shows the consequence of eutrophication in a lake.

Fig. 1.2

Which gas found in water decreases during eutrophication?

A Carbon dioxide

B Methane

C Nitrogen dioxide

D Oxygen

Marks

(h) Which one of the following is an insoluble salt?

A Ammonium nitrate

B Barium sulfate

C Sodium bicarbonate

D Sodium chloride

(i) Which gas is released into the atmosphere during lightning?

A Carbon monoxide

B Carbon dioxide

C Nitrogen dioxide

D Sulfur dioxide

(j) **Fig. 1.3** shows Metal Y in dilute hydrochloric acid.

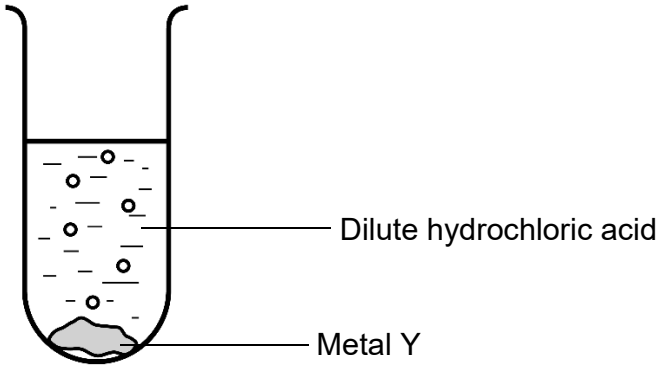

Fig. 1.3

The solution turns pale green.

What is Metal Y?

A Aluminium

B Copper

C Iron

D Zinc

E

TL

CE

Marks

Question 2 (11 marks)

(a) Write down the **formulae** of the following compounds.

(i) Sodium nitrate: ……...

(ii) Potassium sulfate: ……..

(iii) Iron (III) chloride: ……

[3]

(b) Match each of the following salts to its corresponding use.

Salt		Use
Calcium sulfate	●	● To promote plant growth
Sodium chloride	●	● As a laxative
Potassium nitrate	●	● To make glass
Magnesium sulfate	●	● To enhance taste
		● To make plaster of Paris

[4]

Marks

(c) (i) Define neutralisation.

……

…… [1]

(ii) Sulfur dioxide is released from the chimneys of factories.

Name one substance that is used to reduce the emission of sulfur dioxide into the atmosphere.

……..… [1]

(d) Complete the table below by naming the acid used to prepare the given salts.

Salt	Acid
Magnesium nitrate	……..
Sodium chloride	……..

[2]

E

TL

CE

Marks

Question 3 (10 marks)

(a) What class of compound is formed when a metal reacts with oxygen?

……..… [1]

(b) A student heats three metal strips, P, Q and R in the blue flame of a Bunsen burner. His observations are shown below.

Metal	Observation
Metal P	Glows and produces yellow sparks on strong heating.
Metal Q	Burns readily in air with a white flame and forms a white ash.
Metal R	Does not burn or glow when heated. A black solid is formed on strong heating.

(i) Use the information above to deduce which of the three metals P, Q or R is the:

1. most reactive: …… [1]

2. least reactive: ……... [1]

(ii) Suggest what could be metal R.

……. [1]

(iii) State one laboratory safety precaution that the student should take while heating the metal strips.

…….

……. [1]

Marks

(c) (i) When a piece of magnesium ribbon is added to dilute sulfuric acid, a gas is produced.

Name the gas: ……..… [1]

(ii) Name a metal which will not react with dilute sulfuric acid.

……..… [1]

(d) (i) Complete the following word equation.

Calcium + water $\longrightarrow$ …… + Hydrogen [1]

(ii) Write a balanced chemical equation for the reaction in (d)(i).

…… [2]

E
TL
CE

Marks

Question 4 (10 marks)

(a) Complete the following table by stating one source and one harmful effect of the given atmospheric pollutants.

Pollutant	Source	Harmful effect
(i) CFCs	Coolants in refrigerators	……..... …….....
(ii) NO	…….....	Poisonous
(iii) SO_2	Coal-fired power stations	……..... …….....
(iv) CH_4	…….....	Greenhouse effect

[4]

(b) Give two ways in which global warming affects beaches and the marine environment.

1. ……..

……..

2. ……..

……..

[2]

Marks

(c) Industrial waste is a source of water pollution.

Name **two pollutants** present in industrial waste that cause water pollution.

1. ……..

2. ……..

[2]

(d) Apart from the dumping of waste in water bodies, give two other sources of water pollution.

1. ……..

2. ……..

[2]

E

TL

CE

Marks

Question 5 (9 marks)

(a) Which method of separation is used to separate the following mixtures?

(i) Lead (II) sulfate from a mixture of lead (II) sulfate and water.

……..… [1]

(ii) Zinc sulfate crystals from zinc sulfate solution.

……..… [1]

(iii) Iodine from a mixture of iodine, sand, and sodium chloride.

……..… [1]

(b) A student conducts an experiment to separate water from seawater. He sets up the distillation apparatus as shown below in **Fig. 5.1**.

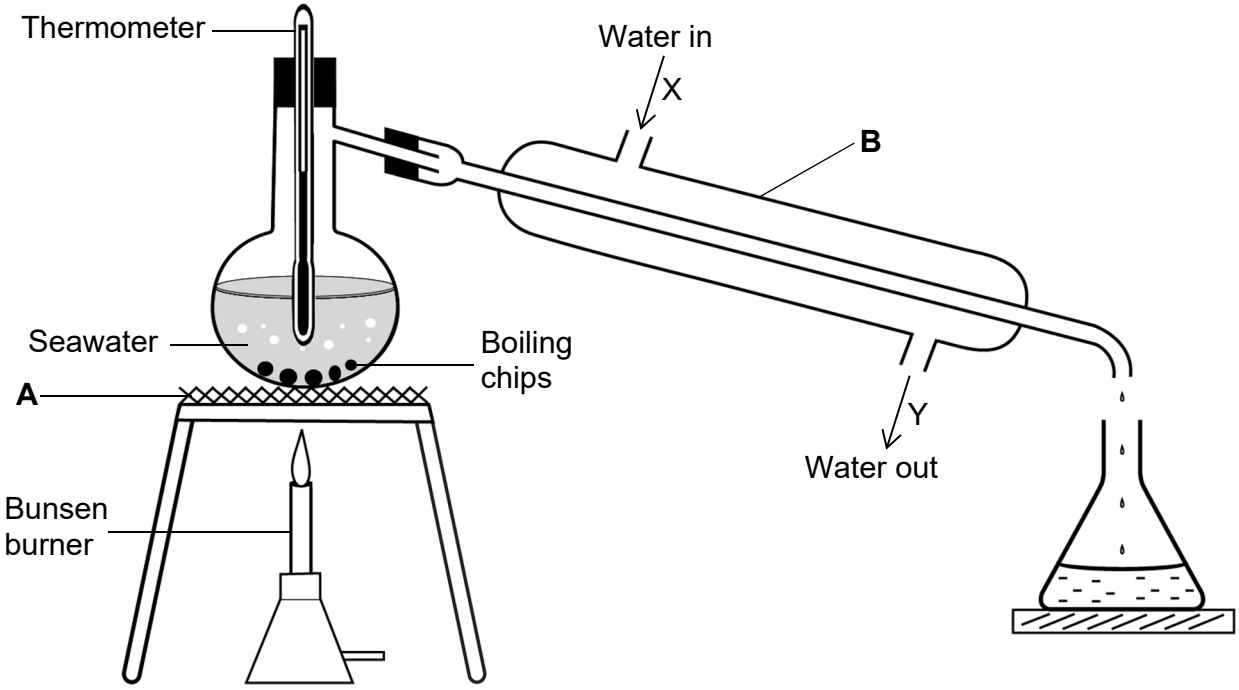

Fig. 5.1

(i) Write down the name of equipment **A** and **B**.

A: ……..…

B: ……..…

[2]

Marks

(ii) What is the function of equipment **B** in this experiment?

……..

…….. [1]

(iii) The student has made **two** mistakes in setting up the distillation apparatus.
Identify the **two** mistakes.

1. …….....

…….....

2. …….....

…….....
[2]

(iv) Suggest why the student uses boiling chips in this experiment.

……..

…….. [1]

END OF PAPER

E
TL
CE

The Periodic Table of Elements

Group																	
I	II											III	IV	V	VI	VII	VIII
							H hydrogen										He helium
Li lithium	Be beryllium											B boron	C carbon	N nitrogen	O oxygen	F fluorine	Ne neon
Na sodium	Mg magnesium											Al aluminium	Si silicon	P phosphorus	S sulfur	Cl chlorine	Ar argon
K potassium	Ca calcium	Sc scandium	Ti titanium	V vanadium	Cr chromium	Mn manganese	Fe iron	Co cobalt	Ni nickel	Cu copper	Zn zinc	Ga gallium	Ge germanium	As arsenic	Se selenium	Br bromine	Kr krypton
Rb rubidium	Sr strontium	Y yttrium	Zr zirconium	Nb niobium	Mo molybdenum	Tc technetium	Ru ruthenium	Rh rhodium	Pd palladium	Ag silver	Cd cadmium	In indium	Sn tin	Sb antimony	Te tellurium	I iodine	Xe xenon
Cs caesium	Ba barium	lanthanoids	Hf hafnium	Ta tantalum	W tungsten	Re rhenium	Os osmium	Ir iridium	Pt platinum	Au gold	Hg mercury	Tl thallium	Pb lead	Bi bismuth	Po polonium	At astatine	Rn radon
Fr francium	Ra radium	actinoids	Rf rutherfordium	Db dubnium	Sg seaborgium	Bh bohrium	Hs hassium	Mt meitnerium	Ds darmstadtium	Rg roentgenium	Cn copernicium		Fl flerovium		Lv livermorium		

©MES

BLANK PAGE

BLANK PAGE