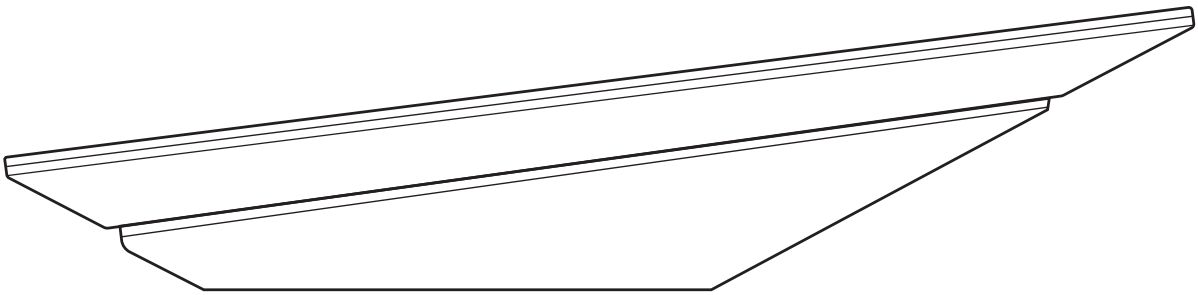

What's In The Box

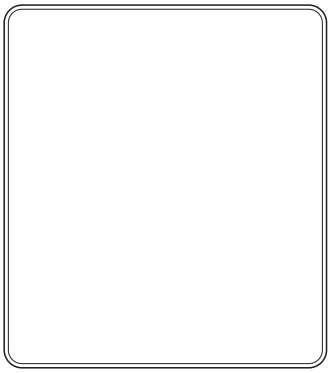

Dish

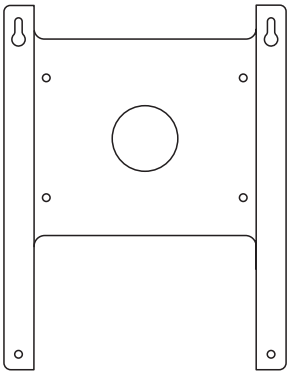

Wedge Mount

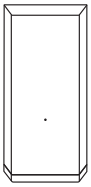

Power Supply

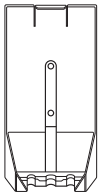

Power Supply Mount

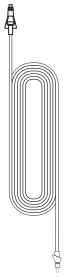

Starlink Cable
25 m
(82 ft)

Ethernet Cable
5 m
(16.5 ft)

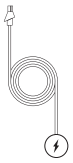

AC Cable (Power Supply)
1.8 m
(6 ft)

Sealing Washers
4x

Washers
8x

Lock Nuts
4x

Screws
4x

Wall Anchors
4x

Machine Screws
4x
38.1 mm (1.5 in)

Socket Head Bolts
2x
13 mm (1/2 in)

Shoulder Bolts
2x

Thread Locker

Silicone Sealant

Recommended Tools

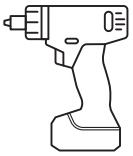

Drill / Impact Driver

Drill Bit
6.5 mm (1/4 in)

Drill Bit
8 mm (5/16v in)

Pencil

7/16 in
Socket

7/16 in Wrench

Philips Head
Screwdriver

Socket Wrench

5/32 in Hex Key

3/16 in Hex Key

1 | **Download the Starlink App**

Scan the QR code to download the Starlink App.

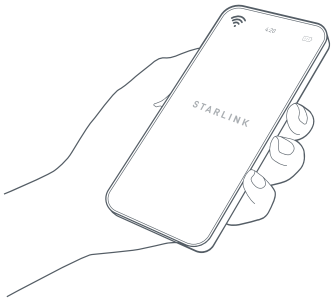

setup.starlink.com

2 | **Mounting Location**

Your Starlink needs a clear view of the sky so it can stay connected with satellites as they move overhead. Objects that obstruct the connection between your Starlink and the satellite, such as a tree branch, pole, or roof, will cause service interruptions. Use the obstruction tool in the App to ensure you have selected a suitable mounting location.

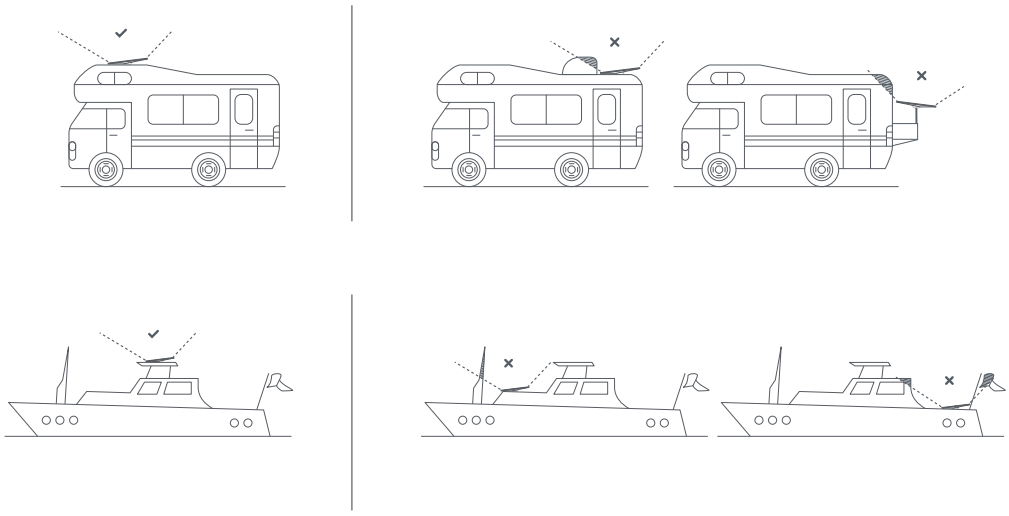

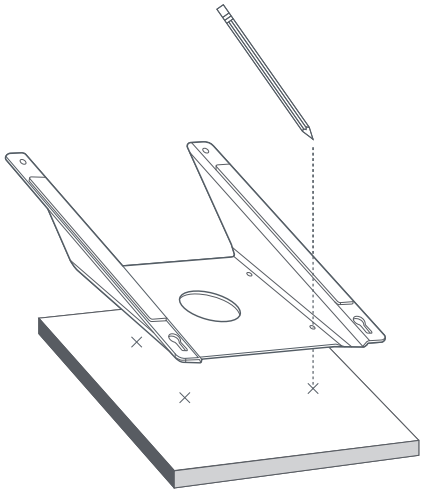

3 | **Mark the Pilot Holes**

Mark the location of the four holes on your Wedge Mount using a pen or pencil.

The included machine screws can accommodate mounting surfaces up to 11.44 mm (0.3 in) thick.

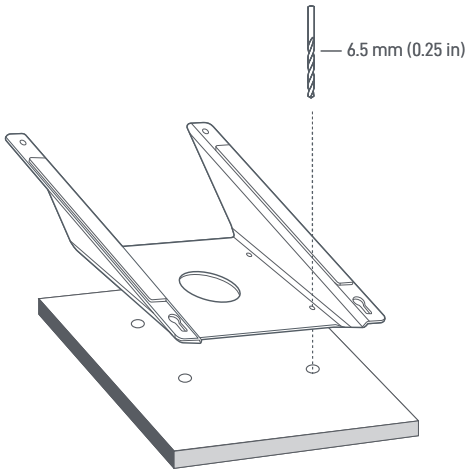

4 | **Drill the Pilot Holes**

Drill the holes with a 6.5 mm (0.25 in) drill bit.

Remove burrs around holes and make sure the surface is free of debris.

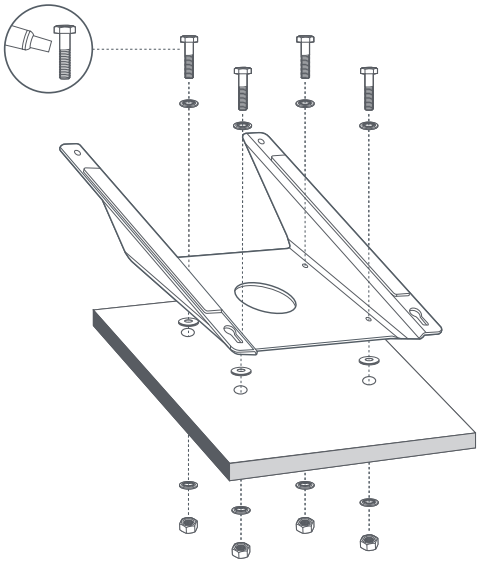

5 | **Apply Sealant and Screw in Mobility Mount**

Place rubber washers over holes followed by mount. Install a washer on each of the four machine screws, liberally apply silicone sealant on the threads, and insert screws through mount and pre-drilled holes.

Install a washer and nut on the end of each machine screw and secure mount to surface. Use a 7/16 in socket and wrench to tighten screws to snug plus 1/4 turn. Do not overtighten.

6 | **Install Shoulder Bolt**

Install shoulder bolts into threaded holes near the cable port. Use a 5/32 in hex key to tighten bolts to hand tight.

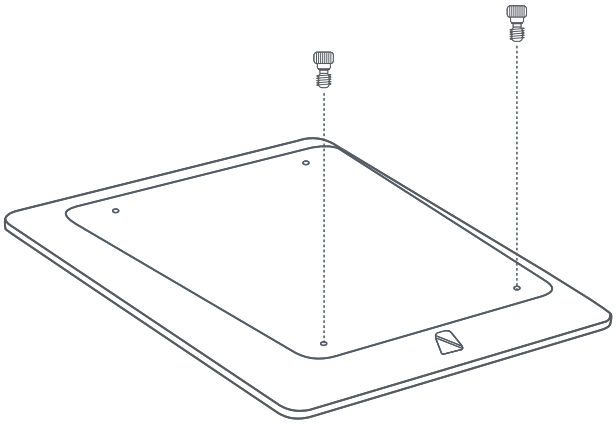

7 | **Lock Starlink onto Mount**

Align shoulder bolts into the keyway on the bottom of the mount. Push down and slide Starlink forward to lock into place.

Once secured, fully tighten shoulder bolts.

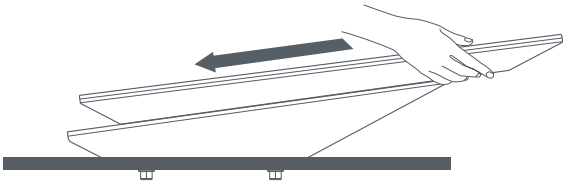

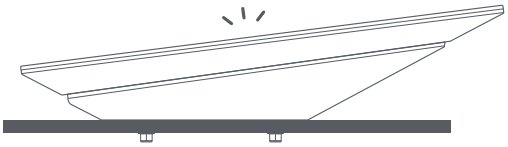

8 | **Secure Starlink**

Wet threads of the 12.7 mm (0.5 in) socket head bolts with thread locker and install into the two remaining holes to secure Starlink. Use the 3/16 in hex key to tighten screws to snug plus 1/4 turn. Do not overtighten.

Ensure you are using the 12.7 mm (0.5 in) length bolts. Longer bolts can damage Starlink.

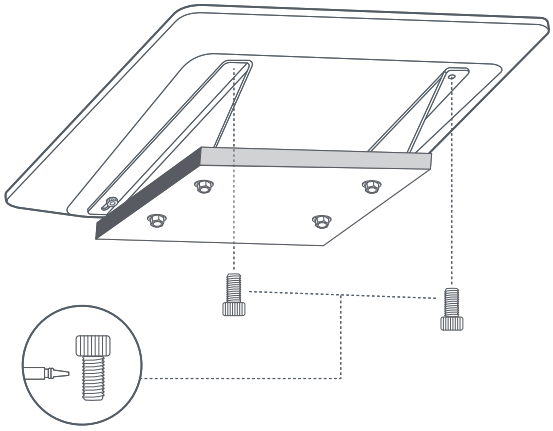

9 | **Connect and Align Starlink**

Plug the Starlink cable into the port on the bottom of the Starlink. Ensure the cable is fully plugged in and push the latch into locking position until you hear or feel a click.

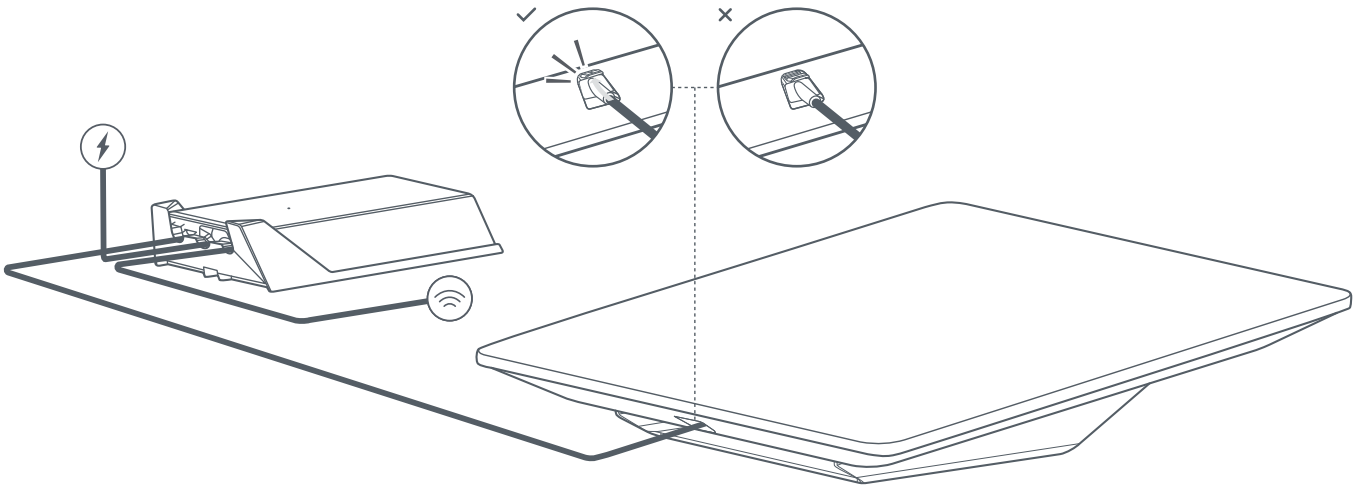

If you have a Starlink router, step through the Starlink install process on the Starlink App.

If you have a compatible third-party router, follow the router's set up instructions.

1 | **Mark Pilot Holes**

Remove the power supply from its mount and select a mount location no more than 1.8 m (6ft) away from your power source.

Mark the location of the two holes on your Power Supply Mount using a pen or pencil.

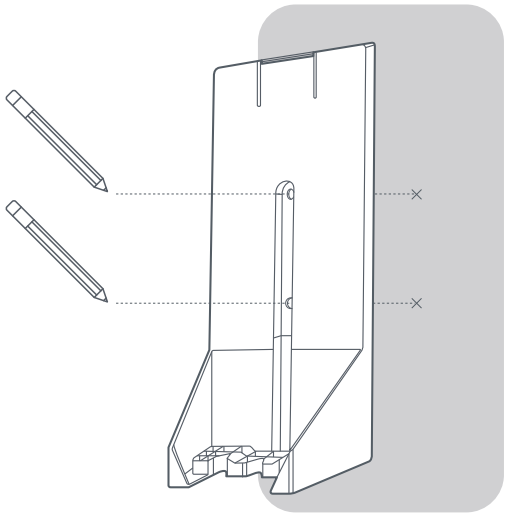

2 | **Drill the Pilot Holes**

Drill the holes with a 8 mm (5/16 in) drill bit.

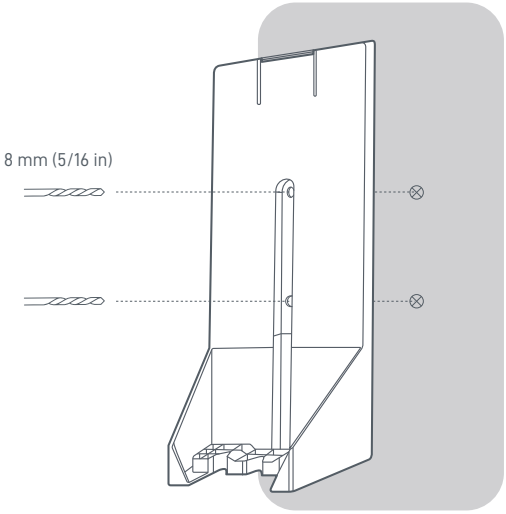

3 | **Install Anchors and Mount**

Push anchors into holes until flush with the wall.

Place the wall mount over the anchors and screw the mount into the wall until securely attached.

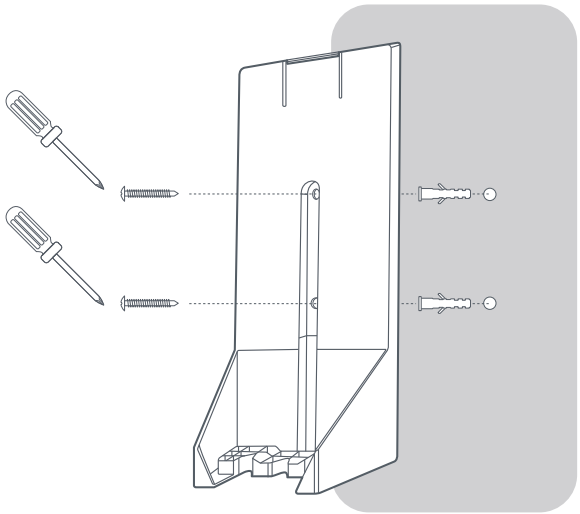

4 | **Plug In Cables and Power Supply**

Plug the Starlink, AC and Ethernet cables into the power supply. Slide the power supply into the mount, making sure the top clip snaps into place.

Finish installation by routing the Ethernet cable to your router install location, connect to router and plug in router and power supply into your power source.

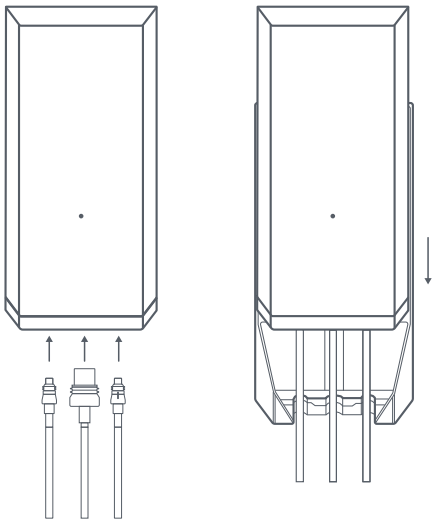

INSTALLATION CONDITIONS

⚠**CAUTION!** If you are uncomfortable with any part of the installation process, do not attempt - contact a professional to install your Starlink. Starlink is not responsible for injury or damage to property caused by the installation process.

Kit Installation for Use on Moving Vehicles.

⚠**CAUTION!** Take extra care if installing a Starlink for being used on a moving vehicle or vessel. Ensure that the mount is installed firmly on a structurally sound, horizontal surface away from other equipment to give your Starlink a clear view of the sky. Equipment falling off the vehicle due to poor installation practices can cause serious accidents resulting in bodily injury, do not mount the Starlink on any vehicle or vessel if the mount structure is not stable, or if it cannot be properly secured as described in this guide. Ensure the installation on vehicle or vessel is compliant with local Department of Transportation or maritime regulations.

⚠**WARNING!** Mounts are not designed for high winds, hurricane or tornado wind loads. Tethering should be used in all cases to prevent failure in an unexpected wind event. See installation instructions before connecting this equipment to the input supply.

⚠**WARNING!** To avoid personal injury and/or damage to the property when drilling, take caution and follow basic safety procedures, including:

- Wear appropriate eye, hand, and face protection.
- Avoid studs, electrical wiring, and water lines when drilling. Drilling into any of these can lead to fire, shock, injury, or death.
- Drill at a slight downward angle from the home interior to the home exterior and thoroughly apply sealant. Improper drilling and sealing may lead to water and/or bug intrusion and/or damage.