REVISIONS				
ZONE	REV.	DESCRIPTION	DATE	APPROVED

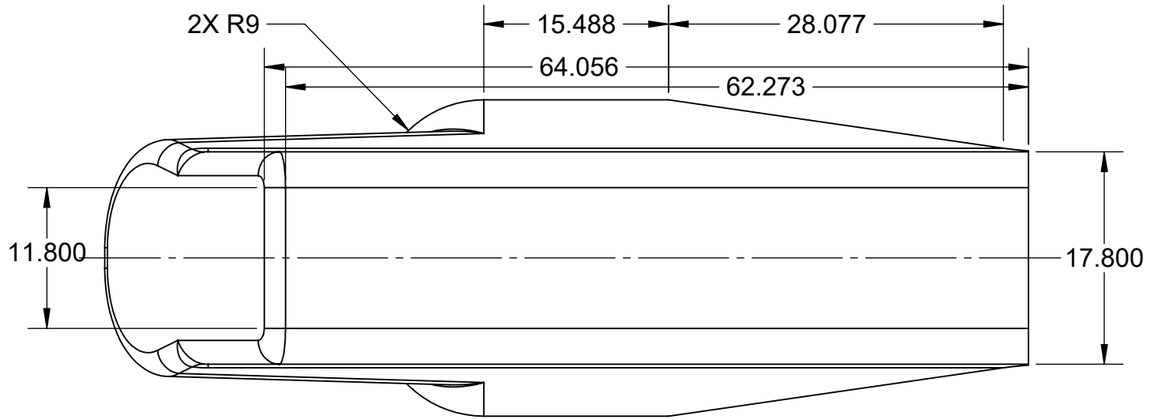

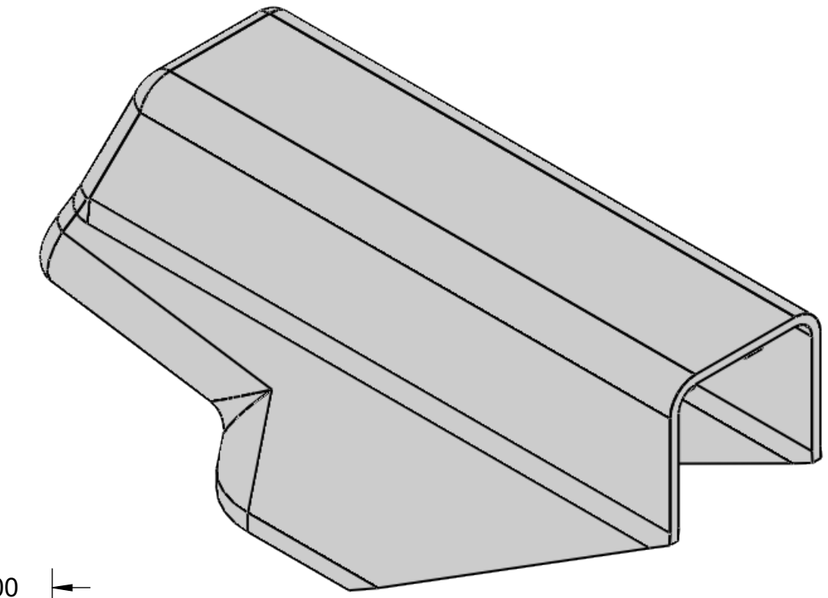

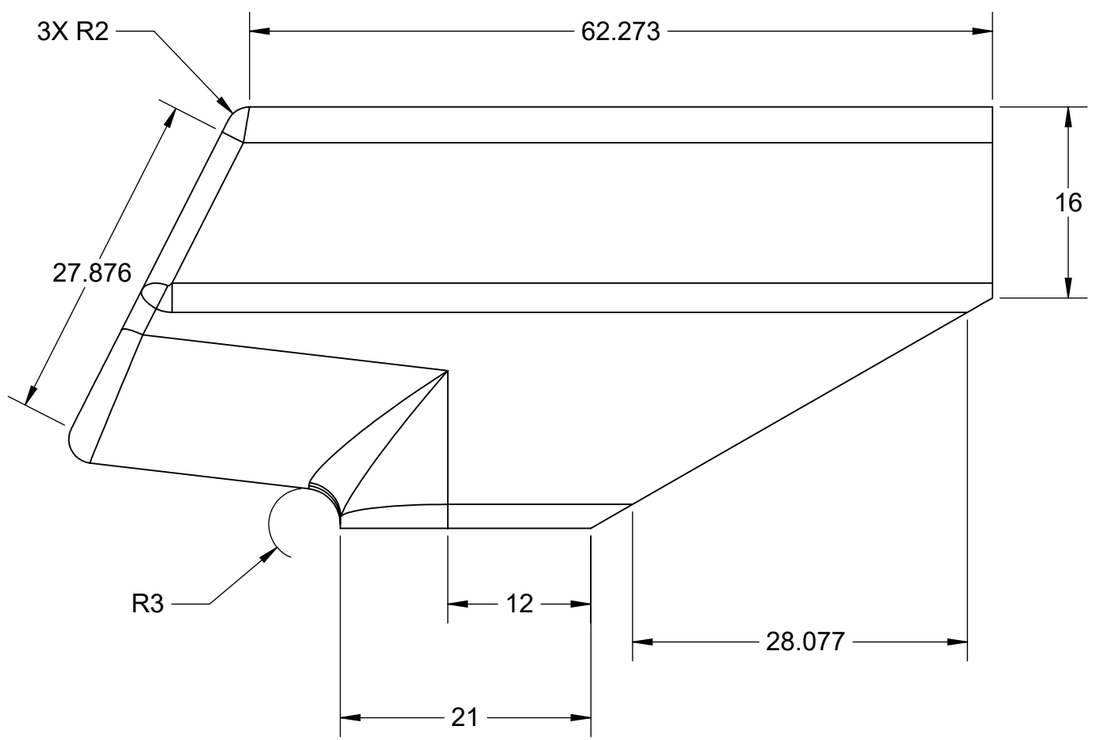

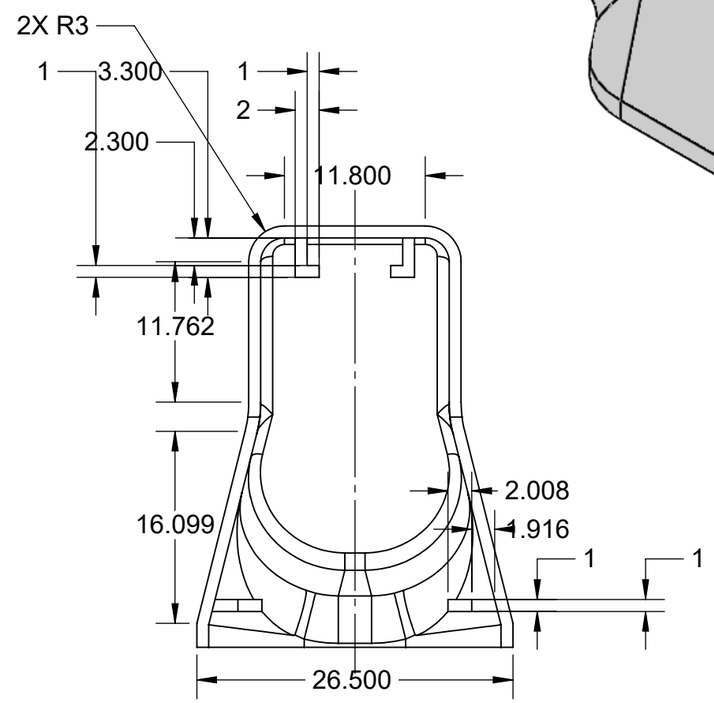

UNLESS OTHERWISE SPECIFIED:		NAME	DATE	UNIVERSITY OF OTTAWA
DIMENSIONS ARE IN **INCHES** TOLERANCES: FRACTIONAL ± 1/32" ANGULAR: MACH ± .1° TWO PLACE DECIMAL ± .010" THREE PLACE DECIMAL ± .005"	DRAWN		11/14/2024	TITLE:
	CHECKED			
	ENG APPR.			
	MFG APPR.			
INTERPRET THIS DRAWING IN ACCORDANCE WITH: ASME Y14.5-2009	Q.A.			
MATERIAL	COMMENTS:			SIZE B / DWG. NO. Amabakoon-300237001-Proj-Part6 / REV
FINISH				
DO NOT SCALE DRAWING				SCALE: 2:1 / WEIGHT: / SHEET 1 OF 1

SOLIDWORKS Educational Product. For Instructional Use Only.