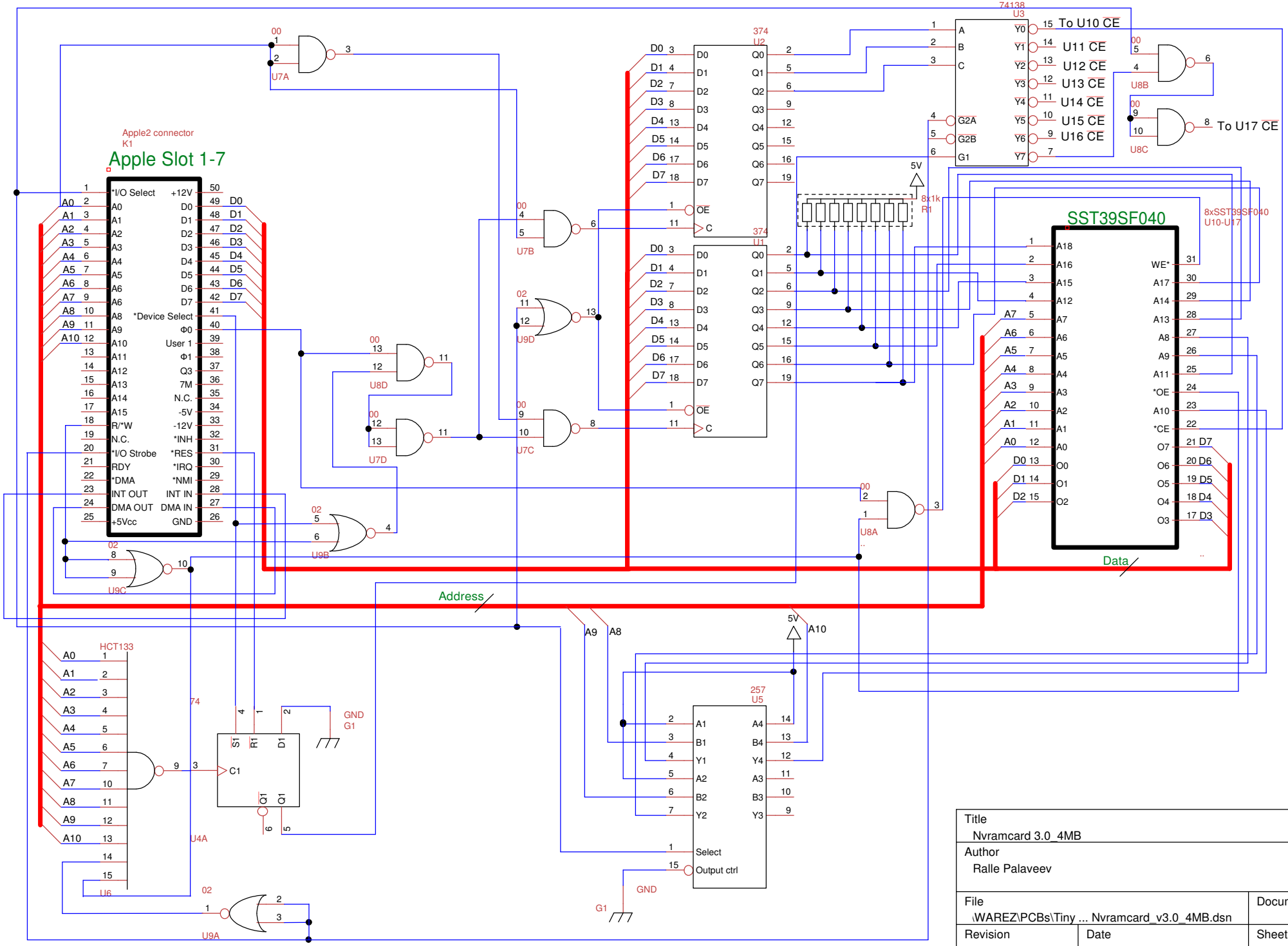

Title Nvramcard 3.0_4MB		
Author Ralle Palaveev		
File \WAREZ\PCBs\Tiny ... Nvramcard_v3.0_4MB.dsn		Document
Revision 1.0	Date 15 Mar 2022	Sheets 1 of 1