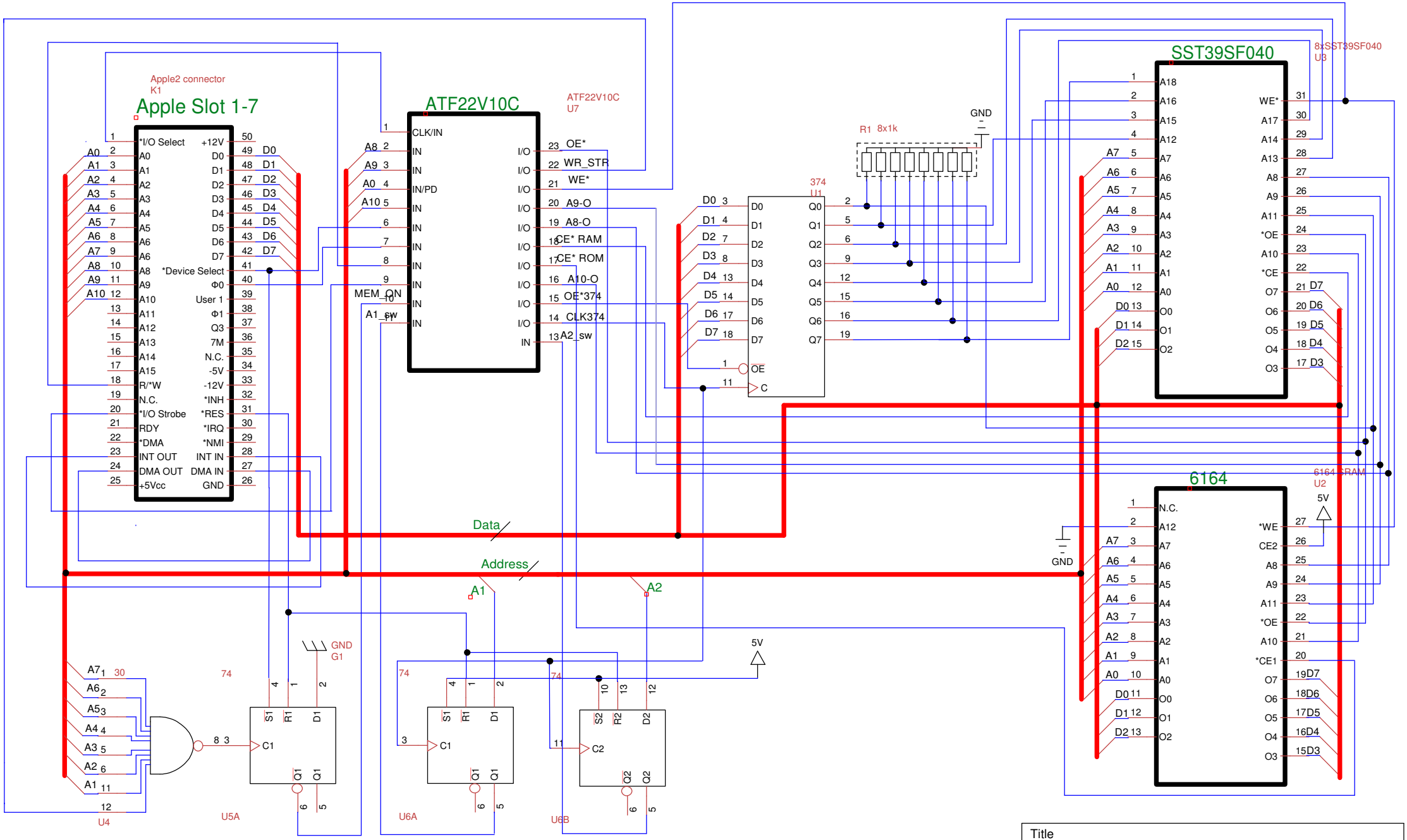

Title NVRAM Drive v.2.3	
Author Ralle Palabveev	
File \WAREZ\PCBs\TinyCAD\ ... Nvramcard_v2.3.dsn	Document
Revision 2.3	Date 1 Jan 2023	Sheets 1 of 1