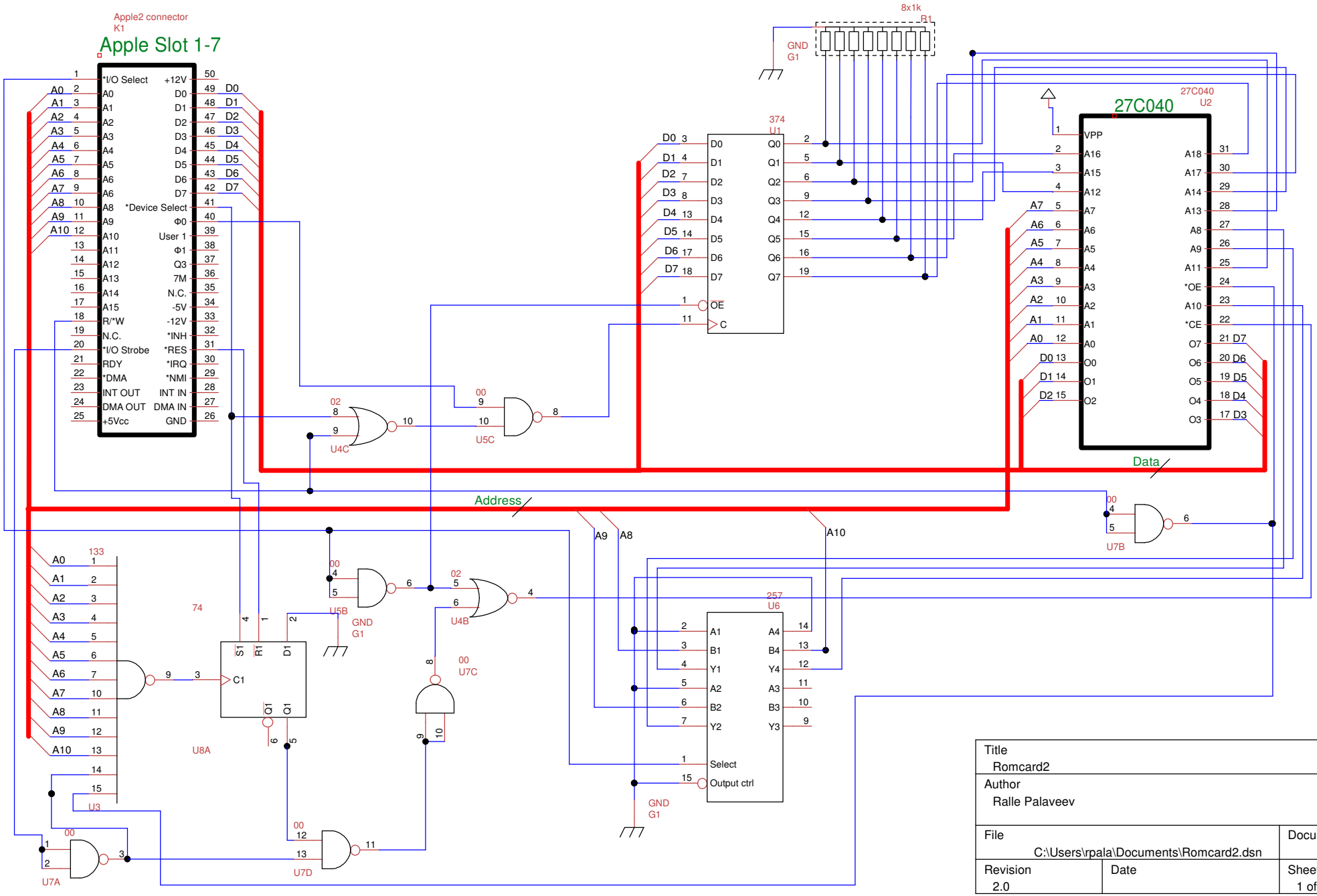

Title Romcard2		
Author Ralle Palaveev		
File C:\Users\rpala\Documents\Romcard2.dsn		Document
Revision 2.0	Date	Sheets 1 of 1