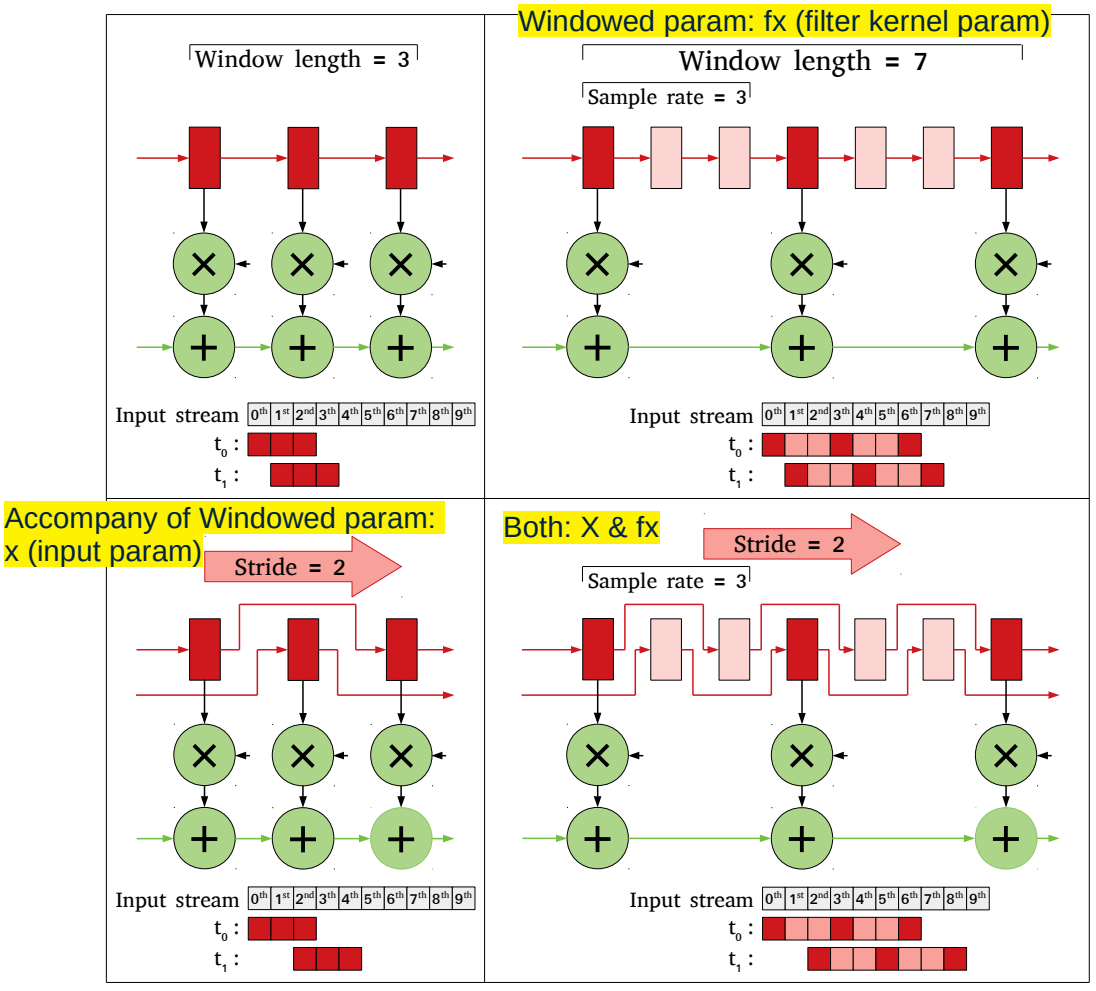

Iteration step may affects:
1- window size
2- speed of windowing
2- sample rate (dilated convolutions)

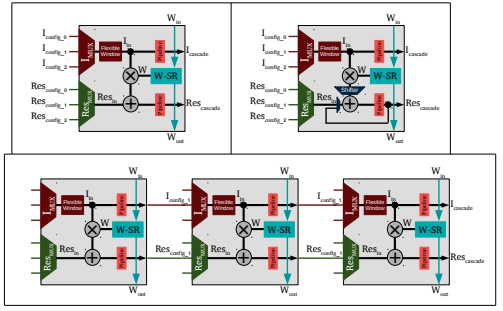

W_in
I_config_0
I_config_1
I_config_2
I_MUX
Flexible Window
I_in
Pipeline
I_cascade
W
W-SR
Res_config_0
Res_config_1
Res_config_2
Res_MUX
Res_in
Pipeline
Res_cascade
W_out
Shifter

Configuration: S_W , S_{AW} , U_{IW}^W , U_{IW}^{NW} , U_{WO} , U_{IO} , U_{IWO}

2D Flex arch

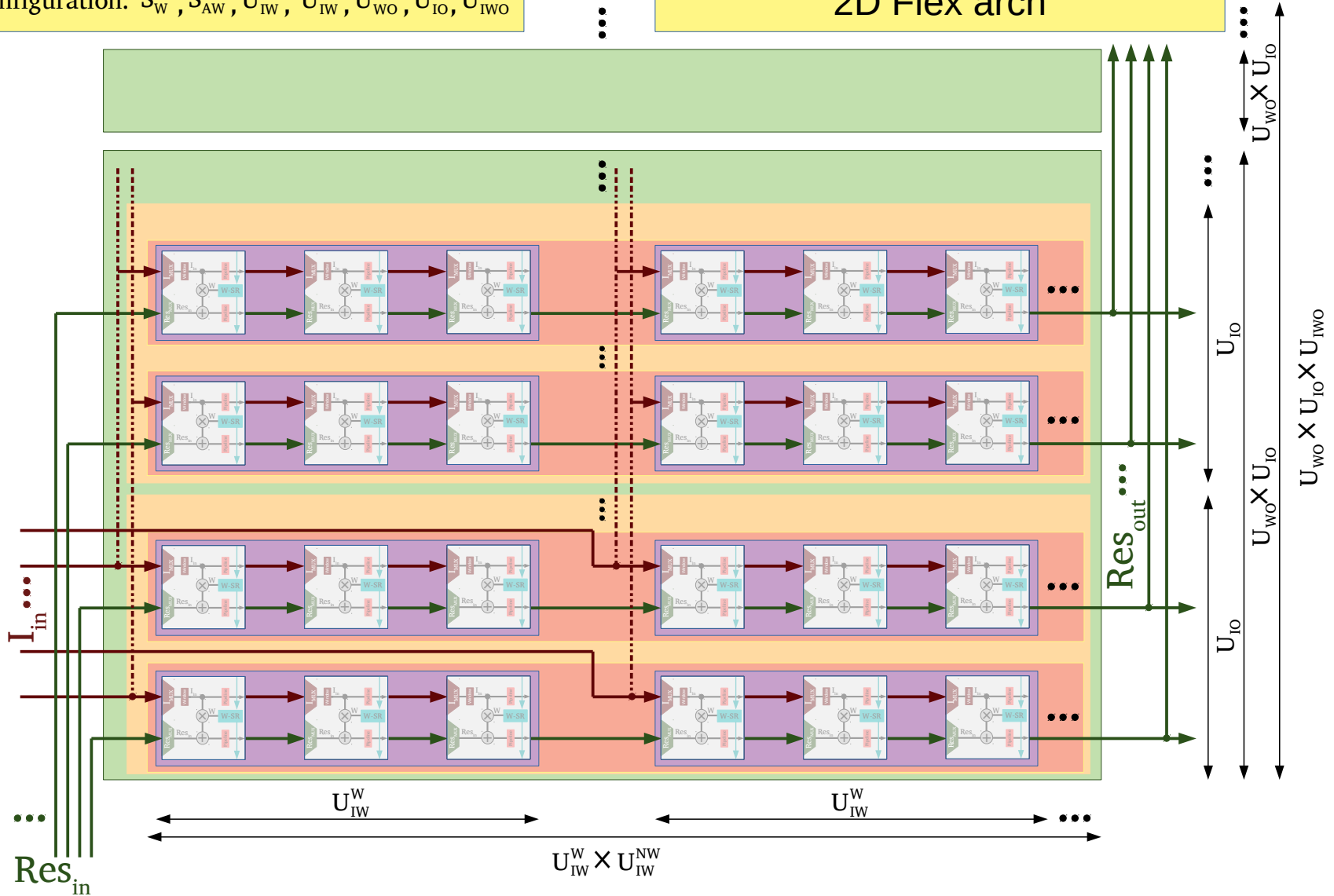
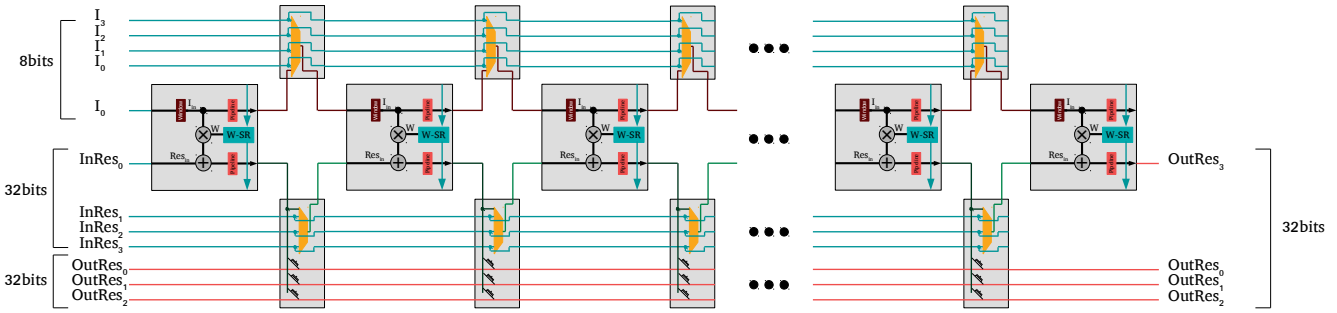
1D Super Flex arch.